Final Dimensional Inspection

Meyer Tool & Mfg., Inc.

4601 W. Southwest Hwy., Oak Lawn, Illinois 60453
708/425-9080 Fax 708/425-2612

Inspection Report

Job No.: 00918-0006 OP10
Customer: LBNL
Description: Distribution Box A
MTM Dwg/Item No.: 24C351

Inspected By: DJC / WJ
Date: 6/10/05
MTE and Set up: Romer Arm, Calipers, Scale

TEMP.: 79° | BARO. PRESS: 29.92"

Dimension	Results			(3)
Dwg 24C351 Sheet 4				
Zone B8: 42.108" +/-.08"	ok 42.150"			
Zone B8: 38.58" +/-.08"	ok 38.574			
Zone B8: 3.528" +/-.08"	ok 3.576"			
Zone C7: 15.337" +/-.08" REF.	(* 15.470"*) (out-of-Tol. by .053")			1
Zone C6: 95.40" +/-.08"	ok 95.388"			
Zone C6: 66.929" +/-.08"	ok 66.860"			
Zone C4: 13.134" +/-.08"	ok 13.214"			
Zone B4: 35.627" +/-.08"	ok 35.613"			
Zone B3: 38.58" +/-.08"	ok 38.617"			
Zone B3: 2.953" +/-.08"	ok 3.004"			
Dwg 24C351 Sheet 7				
8.78"+/-.08" (JC1)	* 8.423" * (out-of-tol. by -.277)			2
8.78"+/-.08" (JC2)	* 8.497" * (out-of-tol. by -.203)			3
JC1 Pipe Locations X+/-.08", Y+/-.08", Z+/-.08"	X	Y	Z	
XB: -14.45", 0.00", 3.07"	ok	ok	3.100 (ok)	
LD2: -14.45", 3.66", 0.00"	ok	3.668" (ok)	ok	
LD1: -14.45", -3.66", 0.00"	ok	-3.675" (ok)	ok	
E1: -14.45", 0.00", -1.26"	ok	ok	-1.250 (ok)	
CY1: -14.45", 0.00", -4.33"	ok	ok	-4.356 (ok)	
JC2 Pipe Locations X+/-.08", Y+/-.08", Z+/-.08"	X	Y	Z	
E2: -14.45", 0.00", 3.07"	ok	ok	3.100 (ok)	
DH: -14.45", 3.66", 0.00"	ok	3.675 (ok)	ok	
KD2: -11.85", -3.66", 0.00"	ok	-3.680 (ok)	ok	
CC2: -14.45", 0.00", -1.26"	ok	ok	-1.275 (ok)	
CC1: -14.45", 2.64", -3.46"	ok	2.659 (ok)	-3.450 (ok)	
CC3: -14.45", -2.64", -3.46"	ok	-2.655 (ok)	-3.465 (ok)	
Dwg 24C351 Sheet 7 Additional Dimensions				
Zone A3: 26.9" REF (2 places)	26.687" (REF DIM.)			
Zone A8: 33.2" REF	33.268" (REF DIM.)			

Meyer Tool & Mfg., Inc.

4601 W. Southwest Hwy., Oak Lawn, Illinois 60453
708/425-9080 Fax 708/425-2612

Inspection Report

Job No.: 00918-0006 OP10
Customer: LBNL
Description: Distribution Box A
MTM Dwg/Item No.: 24C351

Inspected By: DJC
Date:
MTE and Set up: Romer Arm, Calipers, Scale

Dimension	Results			(3)
Dwg 24C351 Sheet 8 (supplemental sheet)				
Q3 Pipe Locations X+/-.08", Z+/-.08", Y+/-.08"	X	Z	Y	
V: 0.00", -2.95", 2.03"	(ok) .078"	(ok) 3.004"	ok	
LD1: -9.44", 7.90", 6.30"	(ok) -9.5"	(ok) 7.875"	ok	
KD2: 5.137", -14.77", 6.299"	(ok) 5.125"	(ok) -14.750"	ok	
CC2: -1.74", -14.77", 6.30"	(ok) -1.750"	(ok) -14.780"	ok	
CY1: 0.00", 11.17", 3.62" INSIDE "XB"	ok	ok	ok	
E1: 15.35", -0.07", 6.30"	(ok) 15.350"	(ok) .068"	ok	
EX: -15.36", -0.02", 6.30"	(ok) -15.360"	(ok) -.020"	ok	
MQX1: 0.00", -8.82", 6.30"	* -.411"	(ok) -8.895"	ok	4
MQX2: -5.90", -2.98", 6.30"	(ok) -5.980"	(ok) -3.000	ok	
WQX (flange): 0.00", 0.00", 0.00"	ok	ok	ok	
XB: 0.00", 11.84", 5.12"	ok	(ok) 11.768"	ok	
D1 Pipe Locations X+/-.08", Z+/-.08", Y+/-.08"	X	Z	Y	
V: 0.00", 3.53", -13.50"	(ok) -.027"	(ok) 3.576"	ok	
CC3: -6.60", -4.35", -14.84"	(ok) -6.595"	(ok) 4.375"	ok	
WBX (flange): 0.00", 0.00", 0.00"	ok	ok	ok	
Dwg 24C351 Sheet 11				
Zone D8; 16.95" +/-.03"	* 17.178" *			5
Zone D8; 30.71" +/-.02"	* 30.663" *			6
Zone D6; 84.715" +/-.02"	* 84.622" *			7
Zone D3; 16.95" +/-.03"	* 17.177" *			8
Zone D4: Reference surface L =/-.6 milliradians angular variation with respect to C (.005" over 8")	ok within .005"			
Zone B8: 9.50"	* 9.043" *			9
Zone B2: 16.00"	* 15.731" *			10
Supplemental Sheet-working clockwise				
2.81" REF	2.740"			
2.81" REF	2.823"			
7.15" REF	7.062"			
1.52" REF	1.437"			

Meyer Tool & Mfg., Inc.

4601 W. Southwest Hwy., Oak Lawn, Illinois 60453
708/425-9080 Fax 708/425-2612

Inspection Report

Job No.: 00918-0006 OP10
Customer: LBNL
Description: Distribution Box A
MTM Dwg/Item No.: 24C351

Inspected By: DJC
Date:
MTE and Set up: Romer Arm, Calipers, Scale

Dimension	Results	(3)
109.67" REF	100.081"	
104.04" REF	94.769"	
16.20" REF	16.128"	
10.57" REF	10.540"	
10.57" REF	10.494"	
16.20" REF	16.163"	
109.67" REF	100.141"	
104.04" REF	94.963"	

Nonconformance Disposition: _____

_____

Dispositioned By: _____ Date: _____

Notes: 1. Record value of all out of tolerance/specification dimension/characteristics. Unless required to record actual values, it is sufficient to report dimensions or characteristics within tolerance or specification as OK.
2. Asterisk (*) all nonconformances. 3. Consecutively number all nonconformances.

[ ] - Are these dim's. correct ??

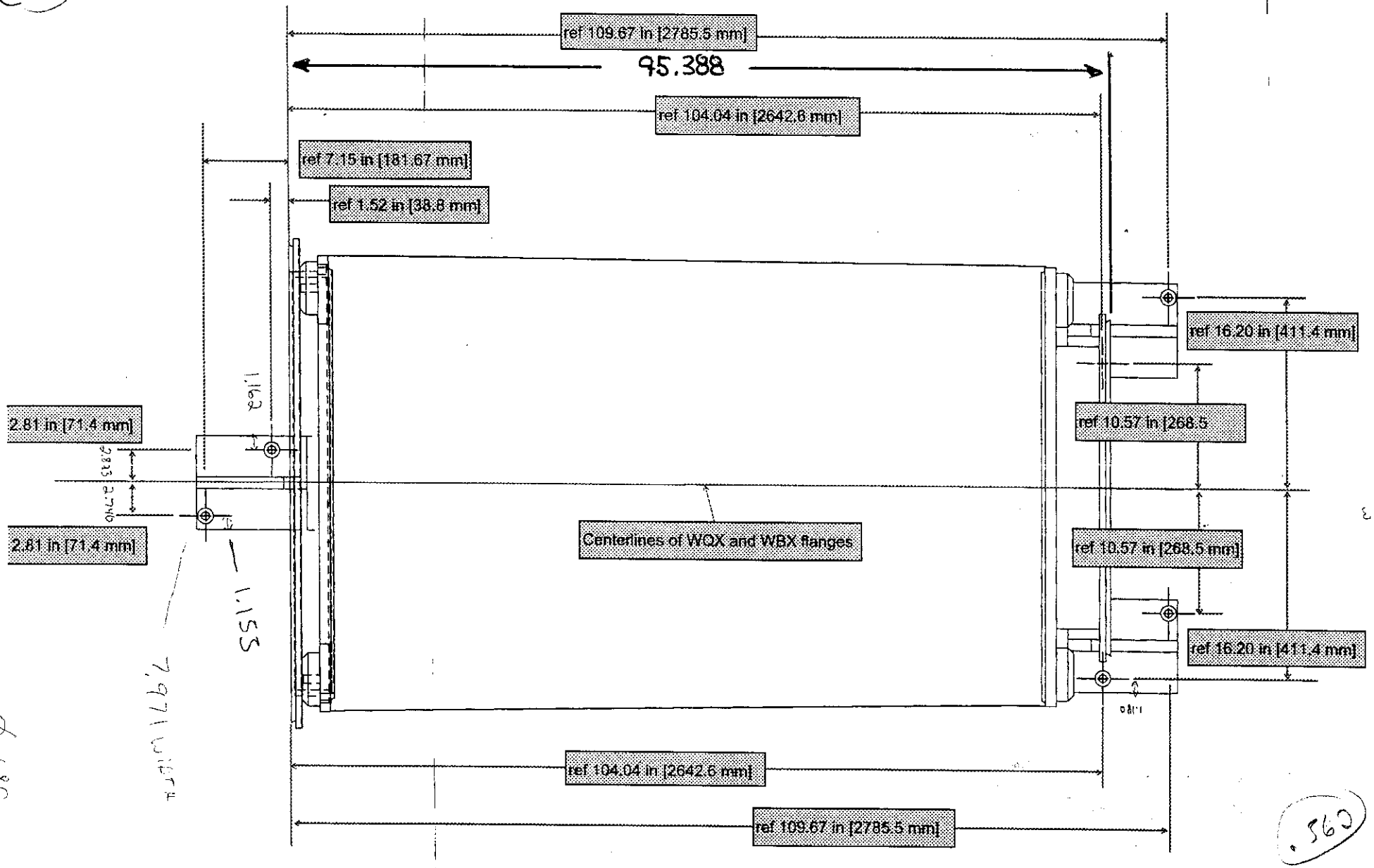
ref 109.67 in [2785.5 mm]
95.388
ref 104.04 in [2642.6 mm]
ref 7.15 in [181.67 mm]
ref 1.52 in [38.8 mm]
ref 16.20 in [411.4 mm]
ref 10.57 in [268.5
2.81 in [71.4 mm]
2.81 in [71.4 mm]
Centerlines of WQX and WBX flanges
ref 10.57 in [268.5 mm]
ref 16.20 in [411.4 mm]
ref 104.04 in [2642.6 mm]
ref 109.67 in [2785.5 mm]

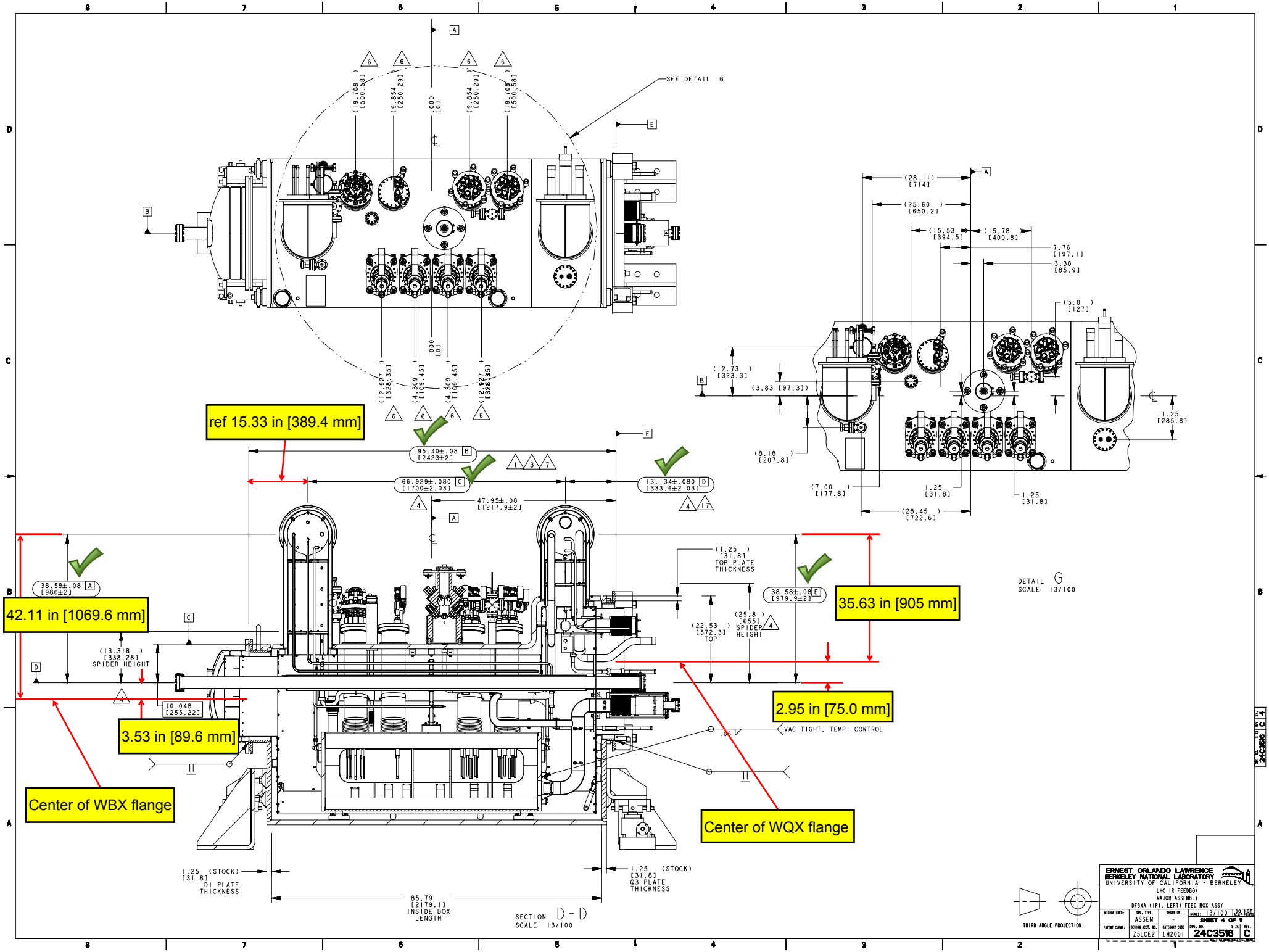
SEE DETAIL G
ref 15.33 in [389.4 mm]
42.11 in [1069.6 mm]
35.63 in [905 mm]
3.53 in [89.6 mm]
2.95 in [75.0 mm]
Center of WBX flange
Center of WQX flange
VAC TIGHT, TEMP. CONTROL
DETAIL G
SCALE 13/100
SECTION D-D
SCALE 13/100
THIRD ANGLE PROJECTION
ERNEST ORLANDO LAWRENCE BERKELEY NATIONAL LABORATORY
UNIVERSITY OF CALIFORNIA - BERKELEY
LHC IR FEEDBOX
MAJOR ASSEMBLY
DFBXA (IP1, LEFT) FEED BOX ASSY
SHEET 4 OF 8
24C3516
C

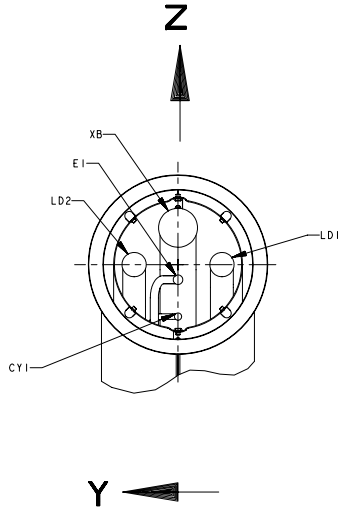

		DIM'S MEASURED FROM FLANGE CENTER	
PIPE	X	Y ±0.08	Z ±0.08
XB	-14.45±.08 [367±2]	0	3.07 [78]
LD2	-14.45±.08 [367±2]	3.66 [93]	0
LD1	-14.45±.08 [367±2]	-3.66 [93]	0
E1	-14.45±.08 [367±2]	0	-1.26 [32]
CY1	-14.45±.08 [367±2]	0	-4.33 [110]

4

DETAIL C
JC1 / QQSC
DIMENSIONAL TOLERANCE ± 0.08
ORIENTATION OPPOSITE OF SPECIFICATION 240
SCALE 1/4

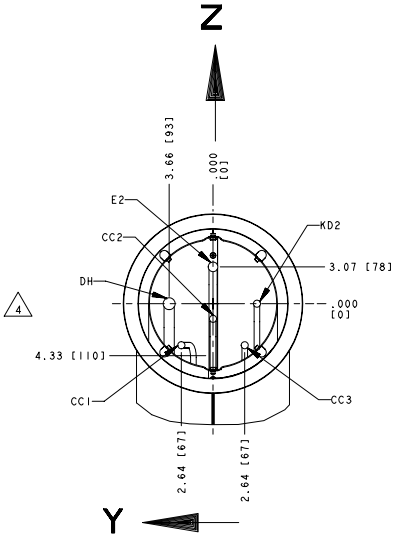

		DIM'S MEASURED FROM FLANGE CENTER	
PIPE	X	Y ±0.08	Z ±0.08
E2	-14.45±.08 [367±2]	0	3.07 [78]
DH	-14.45±.08 [367±2]	3.66 [93]	0
KD2	-11.85±.08 [301±2]	-3.66 [93])	0
CC2	-14.45±.08 [367±2]	0	-1.26 [32]
CC1	-14.45±.08 [367±2]	2.64 [67]	-3.46 [88]
CC3	-14.45±.08 [367±2]	-2.64 [67]	-3.46 [88]

4

DETAIL D
JC2 / QQSD
DIMENSIONAL TOLERANCE ± 0.08
ORIENTATION OPPOSITE OF SPECIFICATION 240
SCALE 1/4

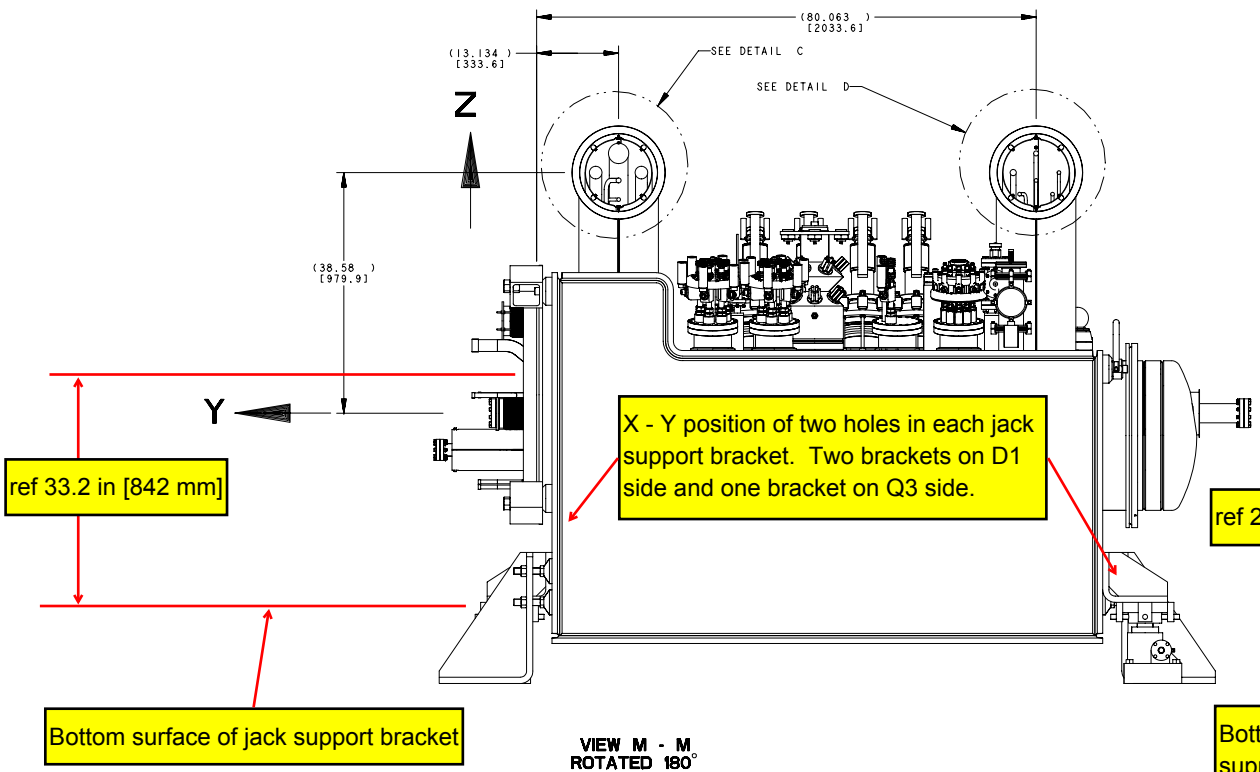

VIEW M - M
ROTATED 180°

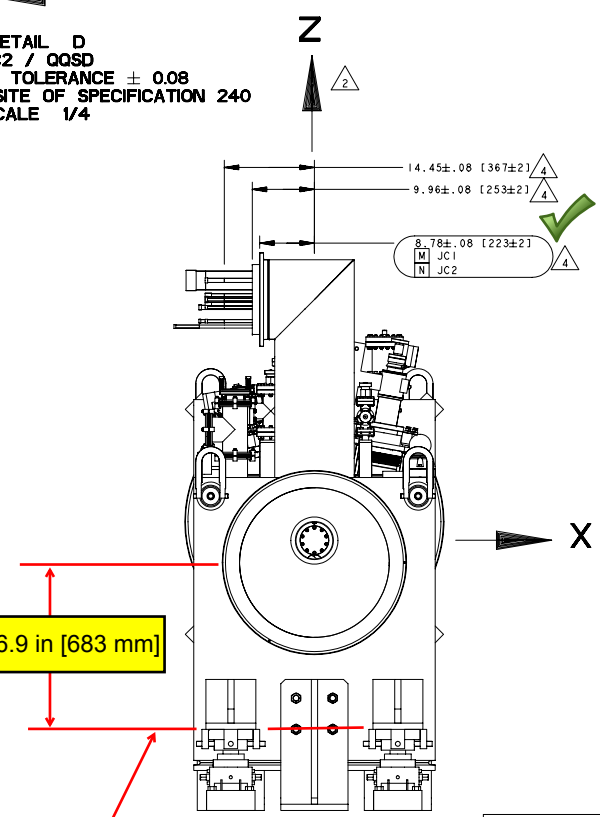

THIRD ANGLE PROJECTION

ERNEST ORLANDO LAWRENCE BERKELEY NATIONAL LABORATORY
UNIVERSITY OF CALIFORNIA - BERKELEY
LHC IR FEEDBOX
MAJOR ASSEMBLY
DFBXA (IP1, LEFT) FEED BOX ASSY

MICROFILMED:	DWG. TYPE	SHOWN ON	SCALE: 13/100	DO NOT SCALE PRINTS
	ASSEM	-	SHEET 7 OF 11	
PATENT CLEAR:	DESIGN ACCT. NO.	CATEGORY CODE	DWG. NO.	SIZE	REV.
	Z5LCE2	LH2001	24C3516	C	

DWG. NO. 24C3516 SIZE C REV. 7

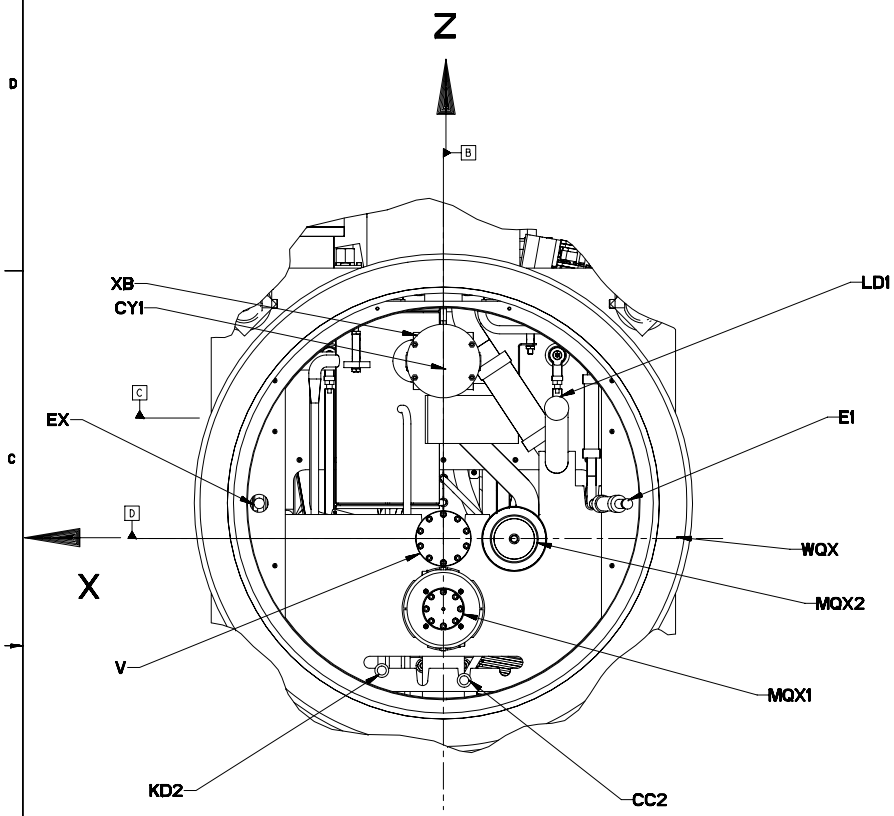

DETAIL E
SCALE 1/4

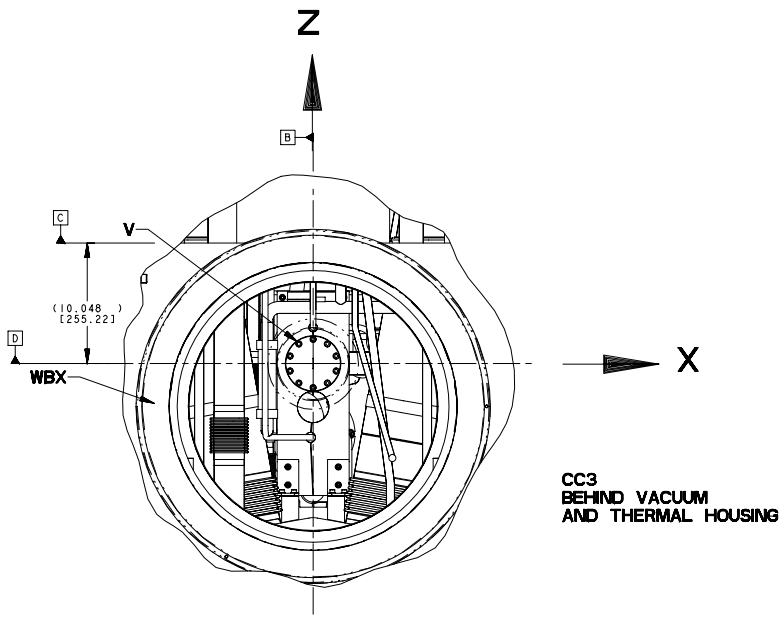

DETAIL F
SCALE 1/4

See next page

See next page

C

Q3 PIPING INTERFACE PER SPEC. LHC-DFBX-ES-210.00 REV 1.0					
DFBX	PIPE OD/ID		PIPE COORDINATES AT 300 K		
DFBX	OD in [mm]	ID in [mm]	X in [mm] ±.08	Z in [mm] ±.08	Y in [mm] ±.08
V	3.071 [78]	2.913 [73.99]	.000 [0]	.000 [0]	2.032 [51.61]
LD1	1.748 [44.4]	1.650 [41.91]	-9.444 [-239.88]	10.855 [275.72]	6.299 [159.99]
KD2	.626 [15.9]	.528 [13.41]	5.137 [130.48]	-11.822 [-300.28]	6.299 [159.99]
CC2	.626 [15.9]	.528 [13.41]	-1.735 [-44.07]	-11.822 [-300.28]	6.299 [159.99]
CY1	.626 [15.9]	.528 [13.41]	.000 [0]	14.126 [358.8]	3.617 [91.87]
E1	1.500 [38.1]	1.370 [34.8]	-15.345 [-389.76]	2.885 [73.28]	6.299 [159.99]
EX	1.500 [38.1]	1.370 [34.8]	15.355 [390.02]	2.929 [74.4]	6.299 [159.99]
MQX1	3.500 [88.9]	3.370 [85.6]	.000 [0]	-5.871 [-149.12]	6.299 [159.99]
MQX2	3.500 [88.9]	3.370 [85.6]	-5.902 [-149.91]	-.031 [-0.79]	6.299 [159.99]
WQX	41.535 [1055]	35.039 [890]	.000 [0]	2.953 [75.01]	.000 [0]
XB	3.500 [88.9]	3.370 [85.6]	.000 [0]	14.792 [375.72]	5.118 [130]

Q3 PIPING INTERFACE PER SPEC. LHC-DFBX-ES-210.00 REV 1.0					
	PIPE OD/ID		PIPE COORDINATES AT 300 K		
DFBX	OD in [mm]	ID in [mm]	X in [mm] ±.08	Z in [mm] ±.08	Y in [mm] ±.08
V	3.06 [77.7]	2.91 [73.9]	.000 [0]	.000 [0]	-13.504 [-343]
CC3	.63 [16]	.53 [13.5]	6.604 [167.74]	-7.879 [-200.13]	-14.843 [-377.01]
WBX	29.53 [750.1]	23.50 [596.9]	.000 [0]	-3.528 [-89.61]	.000 [0]

15

THIRD ANGLE PROJECTION

ERNEST ORLANDO LAWRENCE BERKELEY NATIONAL LABORATORY
UNIVERSITY OF CALIFORNIA - BERKELEY

LHC IR FEEDBOX
MAJOR ASSEMBLY
DFBXA (IP1, LEFT) FEED BOX ASSY

MICROFILMED:	DWG. TYPE	DRAWN ON	SCALE: 13/100	DO NOT SCALE PRINTS
	ASSEM	-	SHEET 8 OF 11	
PATENT CLEAR:	DESIGN ACCT. NO.	CATEGORY CODE	DWG. NO.	SIZE	REV.
	Z5LCE2	LH2001	24C3516	C	C

DWG. NO. 24C3516 SIZE C REV. 8

Q3 Piping Dimensional Inspection - DFBXA Pipe Coordinates at 300 K			
DFBX	**X in / mm ±0.08 in**	**Z in / mm ±0.08 in**	**Y in / mm ±0.08 in**
V	0.00 0.0	-2.95 -75.0	2.03 51.6
LD1	-9.44 -239.9	7.90 200.7	6.30 160.0
KD2	5.14 130.5	-14.77 -375.3	6.30 160.0
CC2	-1.74 -44.1	-14.77 -375.3	6.30 160.0
CY1	0.00 0.0	11.17 283.8	3.62 91.9
E1	-15.34 -389.8	-0.07 -1.7	6.30 160.0
EX	15.36 390.0	-0.02 -0.6	6.30 160.0
MQX1	0.00 0.0	-8.82 -224.1	6.30 160.0
MQX2	-5.90 -149.9	-2.98 -75.8	6.30 160.0
WQX	0.00 0.0	0.00 0.0	0.00 0.0
XB	0.00 0.0	11.84 300.7	5.12 130.0

D1 Piping Dimensional Inspection - DFBXA Pipe Coordinates at 300 K			
DFBX	**X in / mm ±0.08 in**	**Z in / mm ±0.08 in**	**Y in / mm ±0.08 in**
V	0.00 0.0	3.53 89.6	-13.50 -343.0
CC3	6.60 167.7	-4.35 -110.5	-14.84 -377.0
WBX	0.00 0.0	0.00 0.0	0.00 0.0

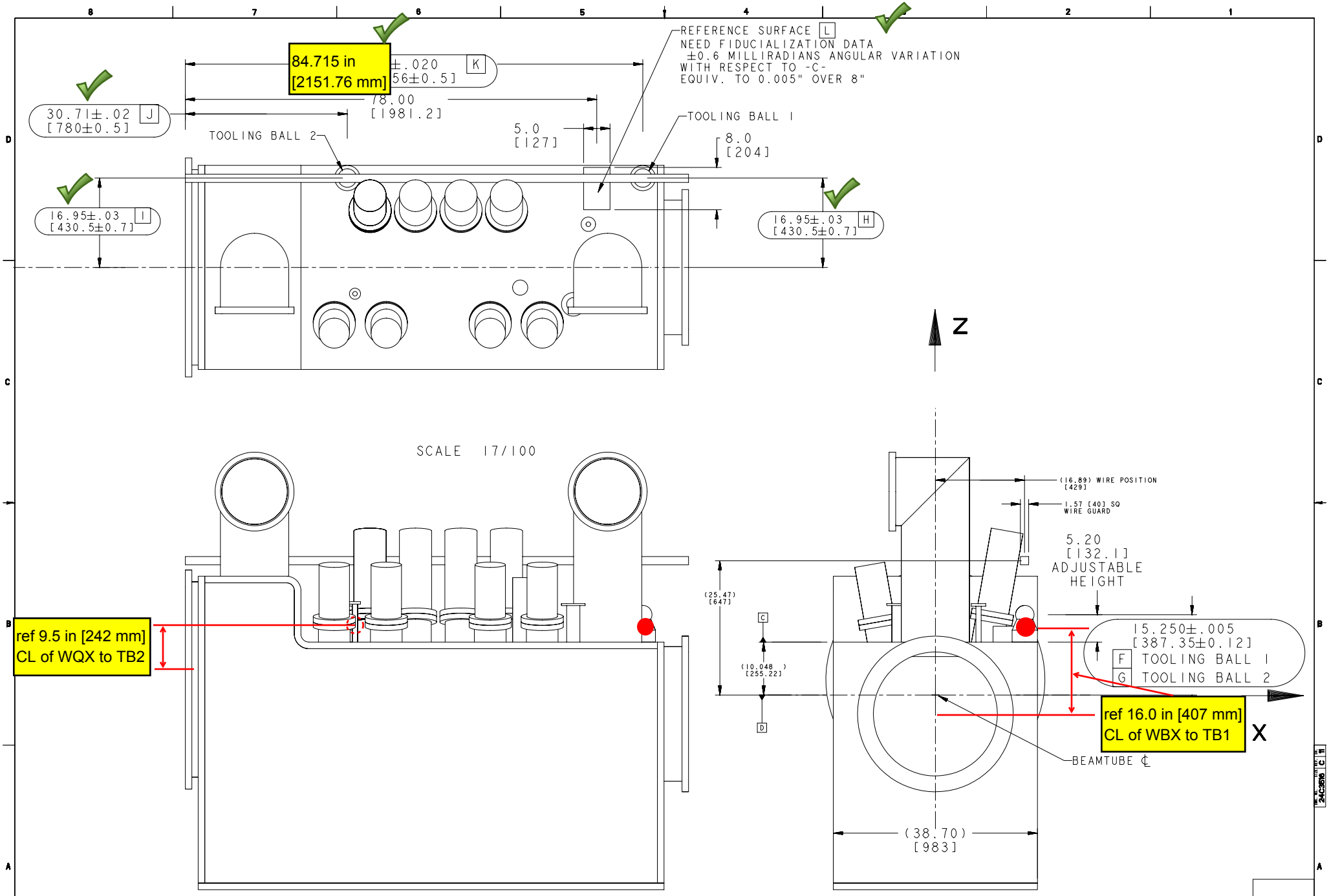

FIDUCIAL LAYOUT INFORMATION

THIRD ANGLE PROJECTION

ERNEST ORLANDO LAWRENCE BERKELEY NATIONAL LABORATORY
UNIVERSITY OF CALIFORNIA - BERKELEY

LHC IR FEEDBOX
MAJOR ASSEMBLY
DFBXA (IP1, LEFT) FEED BOX ASSY

MICROFILMED:	DWG. TYPE ASSEM	DRAWN ON -	SCALE: 13/100	DO NOT SCALE PRINTS
PATENT CLEAR:	DESIGN ACCT. NO. Z5LCE2	CATEGORY CODE LH2001	DWG. NO. 24C3516	SIZE C	REV. C

SHEET 1 OF 1

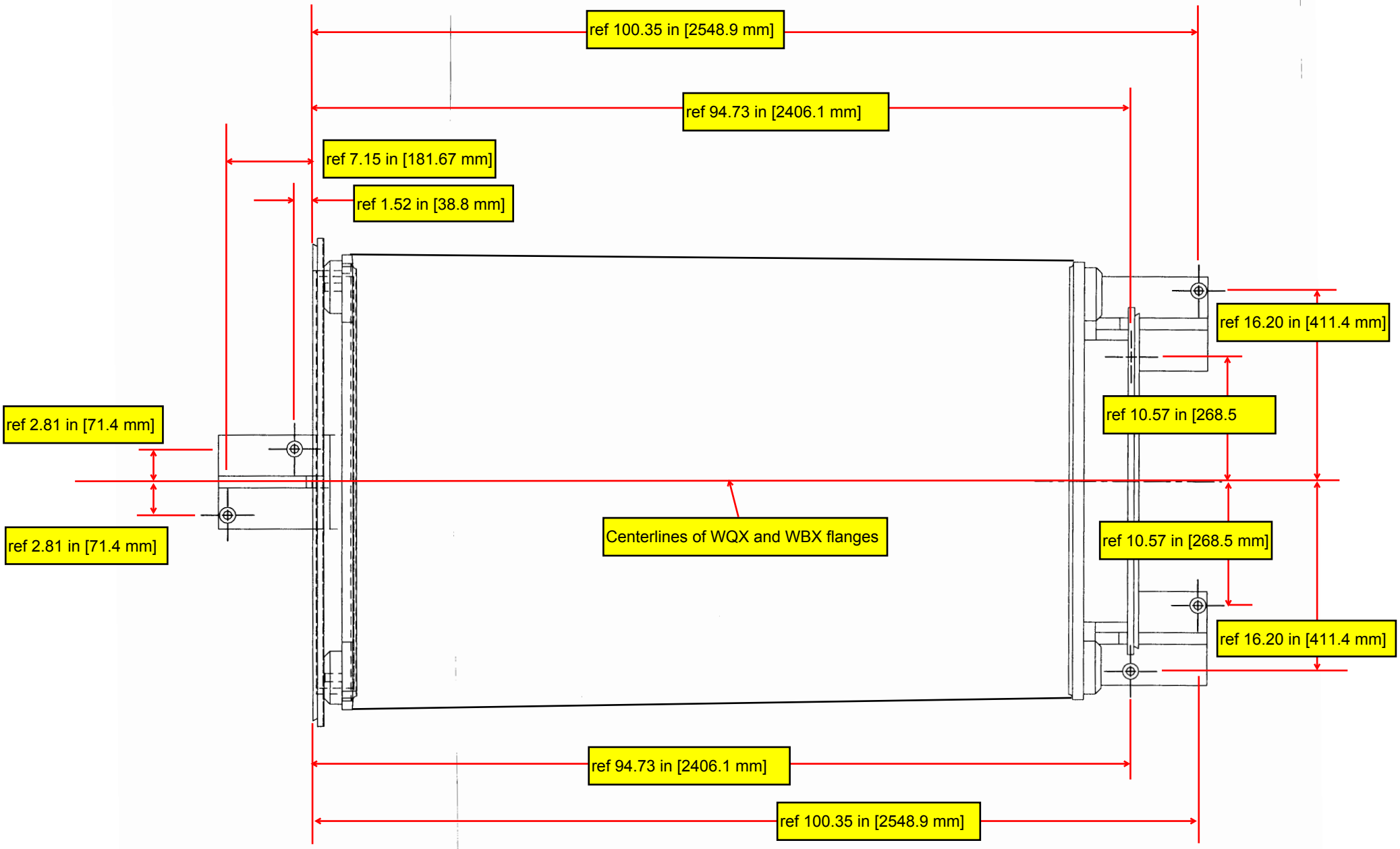
ref 100.35 in [2548.9 mm]
ref 94.73 in [2406.1 mm]
ref 7.15 in [181.67 mm]
ref 1.52 in [38.8 mm]
ref 16.20 in [411.4 mm]
ref 10.57 in [268.5
ref 2.81 in [71.4 mm]
ref 2.81 in [71.4 mm]
Centerlines of WQX and WBX flanges
ref 10.57 in [268.5 mm]
ref 16.20 in [411.4 mm]
ref 94.73 in [2406.1 mm]
ref 100.35 in [2548.9 mm]