Final Dimensional Inspection

Meyer Tool & Mfg., Inc.

4601 W. Southwest Hwy., Oak Lawn, Illinois 60453
708/425-9080 Fax 708/425-2612

Inspection Report

Job No.: 00918-0004 OP10
Customer: LBNL
Description: Distribution Box B
MTM Dwg/Item No.: 24C350

Inspected By: DJC/WJ
Date: 7-11-05
MTE and Set up: Romer Arm, Calipers, Scale

Dimension	Results	(3)
Dwg 24C350 Sheet 4		
Zone B8: 38.58" +/-.08"	ok 38.545"	
Zone B8: 2.953" +/-.08"	ok 2.964"	
Zone B8: 35.627" +/-.08"	ok 35.581"	
Zone B7: 13.134" +/-.08"	ok 13.200"	
Zone C6: 95.40" +/-.08"	ok 95.390"	
Zone C6: 66.929" +/-.08"	ok 66.886"	
Zone C4: 15.33" +/-.08"	* 15.227" * (-.023" out-of-tol.)	1
Zone B4: 38.58" +/-.08"	ok 38.625"	
Zone B3: 42.108" +/-.08"	* 42.208" * (+.020" out-of-tol.)	2
Zone B3: 3.528" +/-.08"	ok 3.583"	
Dwg 24C350 Sheet 7		
8.78"+/-.08" (JC1)	* 8.490 * (-.210" out-of-tol.)	3
8.78"+/-.08" (JC2)	* 8.632" * (-.068" out-of-tol.)	4
JC1 Pipe Locations X+/-.08", Y+/-.08", Z+/-.08"	X Y Z	
XB: -14.45", 0.00", 3.07"	-14.45 0 3.062	
LD2: -14.45", 3.66", 0.00"	-14.45 3.660 0	
LD1: -14.45", -3.66", 0.00"	-14.45 -3.600 0	
E1: -14.45", 0.00", -1.26"	-14.45 0 -1.250	
CY1: -14.45", 0.00", -4.33"	-14.45 0 -4.320	
JC2 Pipe Locations X+/-.08", Y+/-.08", Z+/-.08"	X Y Z	
E2: -14.45", 0.00", 3.07"	-14.45 0 3.070	
DH: -14.45", -3.66", 0.00"	-14.45 -3.66 0	
KD2: -14.45", 3.66", 0.00"	-14.45 3.66 0	
CC2: -14.45", 0.00", -1.26"	-14.45 0 -1.26	
CC1: -14.45", -2.64", -3.46"	-14.45 -2.64 -3.46	
CC3: -14.45", 2.64", -3.46"	-14.45 2.64 -3.46	
Dwg 24C350 Sheet 7 Additional Dimensions		
Zone A8: 26.9" REF (2 places)	26.780" * (REF)	5
Zone A3: 33.2" REF	33.259" (REF)	

Meyer Tool & Mfg., Inc.

4601 W. Southwest Hwy., Oak Lawn, Illinois 60453
708/425-9080 Fax 708/425-2612

Inspection Report

Job No.: 00918-0004 OP10
Customer: LBNL
Description: Distribution Box B
MTM Dwg/Item No.: 24C350

Inspected By: DJC/WJ
Date: 7-11-05
MTE and Set up: Romer Arm, Calipers, Scale

Dimension	Results			(3)
Dwg 24C350 Sheet 8 (supplemental sheet)				
Q3 Pipe Locations X+/-.08", Z+/-.08", Y+/-.08"	X	Z	Y	
V: 0.00", -2.95", -2.03"	.055" (ok)	-2.964" (ok)	ok	
LD1: 9.44", 7.90", -6.30"	ok 9.500"	ok 8.00"	ok	Sits into G-10 Plate
D2 ~~CC3: -1.74", -14.73", -6.30"~~	ok -5.125	from G-10 Dwg. / correct	/ Z=ok / Y=ok /	
CC2: 1.74", -14.78", -6.30"	1.740 ok	ok -14.75"	ok	
CY1: 0.00", 11.17", -3.62"	ok .000	ok 11.125"	ok	
E1: 15.34", -0.07", -6.30"	ok 15.375"	ok -.06"	ok	
EX: -15.36", -0.020", -6.30"	ok -15.375"	ok -.045"	ok	
MQX1: 0.00", -8.82", -6.30"	ok .000 {w/o CAN}	ok -8.90" {w/o CAN}	ok	
MQX2: 5.90", -2.98", -6.30"	ok 5.875 {w/o supports}	-3.00 {w/o supports}	ok	
WQX (flange): 0.00", 0.00", 0.00"	0	0	0	
XB: -9.42", 7.92", -5.12"	-9.410	7.900		
D1 Pipe Locations X+/-.08", Z+/-.08", Y+/-.08"	X	Z	Y	
V: 0.00", 3.53", 13.50"	.005" (ok)	3.583" (ok)	ok	
CC3: -6.60", -4.35", 14.84"	ok 6.625"	ok -4.375"	ok	
WBX (flange): 0.00", 0.00", 0.00"	0	0	0	
Dwg 24C350 Sheet 11				
Zone D8; 16.95" +/-.03"	ok 16.952"			
Zone D8; 30.71" +/-.02"	* 30.634" *			6
Zone D6; ~~[illegible]~~" +/-.02" 84.715"	* 84.615" *			7
Zone D3; 16.95" +/-.03"	ok 16.964"			
Zone D4: Reference surface L +/-.6 milliradians angular variation with respect to C (.005" over 8")	ok within .005" over 8"			
Zone B8: 9.50" (REF)	9.301" (REF)			
Zone B2: 16.00" (REF)	15.905" (REF)			
Supplemental Sheet-working clockwise				
2.81" REF	2.755			
2.81" REF	2.850			
7.15" REF	7.128			
1.52" REF	1.580			

Meyer Tool & Mfg., Inc.

4601 W. Southwest Hwy., Oak Lawn, Illinois 60453
708/425-9080 Fax 708/425-2612

Inspection Report

Job No.: 00918-0004 OP10
Customer: LBNL
Description: Distribution Box B
MTM Dwg/Item No.: 24C350

Inspected By: DJC/WJ
Date: 7-11-05
MTE and Set up: Romer Arm, Calipers, Scale

Dimension	Results	(3)
109.67" REF (This number is wrong.)	100.362" (REF)	
104.04" REF (This number is wrong.)	94.716"	
16.20" REF	16.298"	
10.57" REF	10.598"	
10.57" REF	10.568"	
16.20" REF	16.244"	
109.67" REF (This number is wrong.)	100.337"	
104.04" REF (This number is wrong.)	94.700"	

Noconformance Disposition:.

Dispositioned By: _____ Date: _____

Notes: 1. Record value of all out of tolerance/specification dimension/characteristics. Unless required to record actual values, it is sufficient to report dimensions or characteristics within tolerance or specification as OK.
2. Asterisk (*) all nonconformances. 3. Consecutively number all nonconformances.

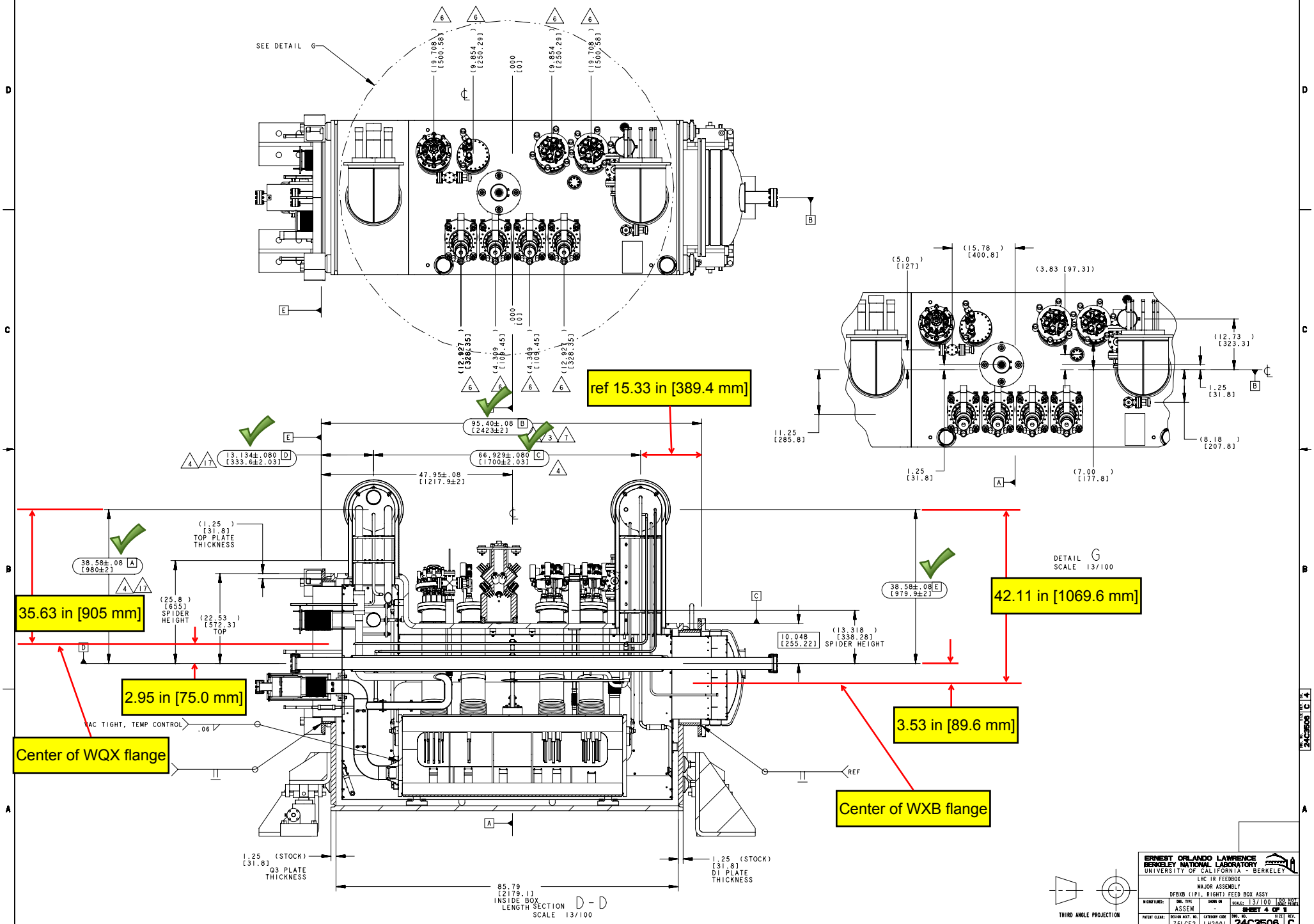
SEE DETAIL G
ref 15.33 in [389.4 mm]
35.63 in [905 mm]
2.95 in [75.0 mm]
Center of WQX flange
42.11 in [1069.6 mm]
3.53 in [89.6 mm]
Center of WXB flange
DETAIL G
SCALE 13/100
D - D
SCALE 13/100
THIRD ANGLE PROJECTION
ERNEST ORLANDO LAWRENCE BERKELEY NATIONAL LABORATORY
UNIVERSITY OF CALIFORNIA - BERKELEY
LHC IR FEEDBOX
MAJOR ASSEMBLY
DFBXB (IP1, RIGHT) FEED BOX ASSY
ASSEM
Z5LCE2
LH2001
SHEET 4 OF 11
24C3506
C

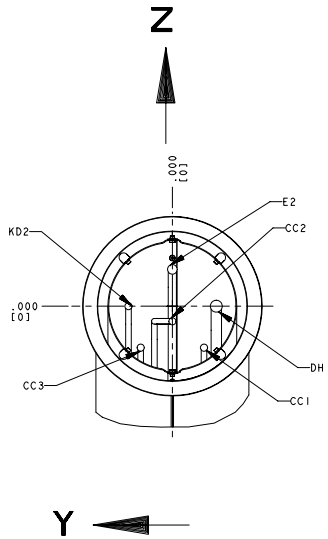

		DIM'S MEASURED FROM FLANGE CENTER	
PIPE	X	Y ±0.08	Z ±0.08
E2	-14.45±.08 [367±2]	0	3.07 [78]
DH	-14.45±.08 [367±2]	-3.66 [93]	0
KD2	-14.45±.08 [367±2]	3.66 [93]]	0
CC2	-14.45±.08 [367±2]	0	-1.26 [32]
CC1	-14.45±.08 [367±2]	-2.64 [67]	-3.46 [88]
CC3	-14.45±.08 [367±2]	2.64 [67]	-3.46 [88]

4

DETAIL D
JC2 / QQSD
DIMENSIONAL TOLERANCE ± 0.08
ORIENTATION OPPOSITE OF SPECIFICATION 240
SCALE 1/4

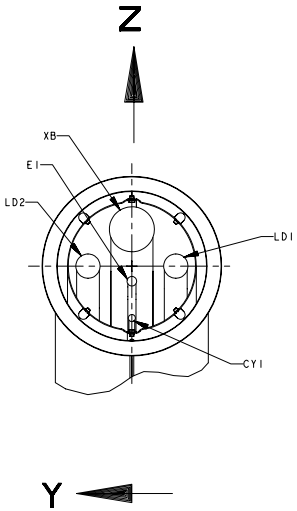

		DIM'S MEASURED FROM FLANGE CENTER	
PIPE	X	Y ±0.08	Z ±0.08
XB	-14.45±.08 [367±2]	0	3.07 [78]
LD2	-14.45±.08 [367±2]	3.66 [93]	0
LD1	-14.45±.08 [367±2]	-3.66 [93]	0
E1	-14.45±.08 [367±2]	0	-1.26 [32]
CY1	-14.45±.08 [367±2]	0	-4.33 [110]

4

DETAIL C
JC1 / QQSC
DIMENSIONAL TOLERANCE ± 0.08
ORIENTATION OPPOSITE OF SPECIFICATION 240
SCALE 1/4

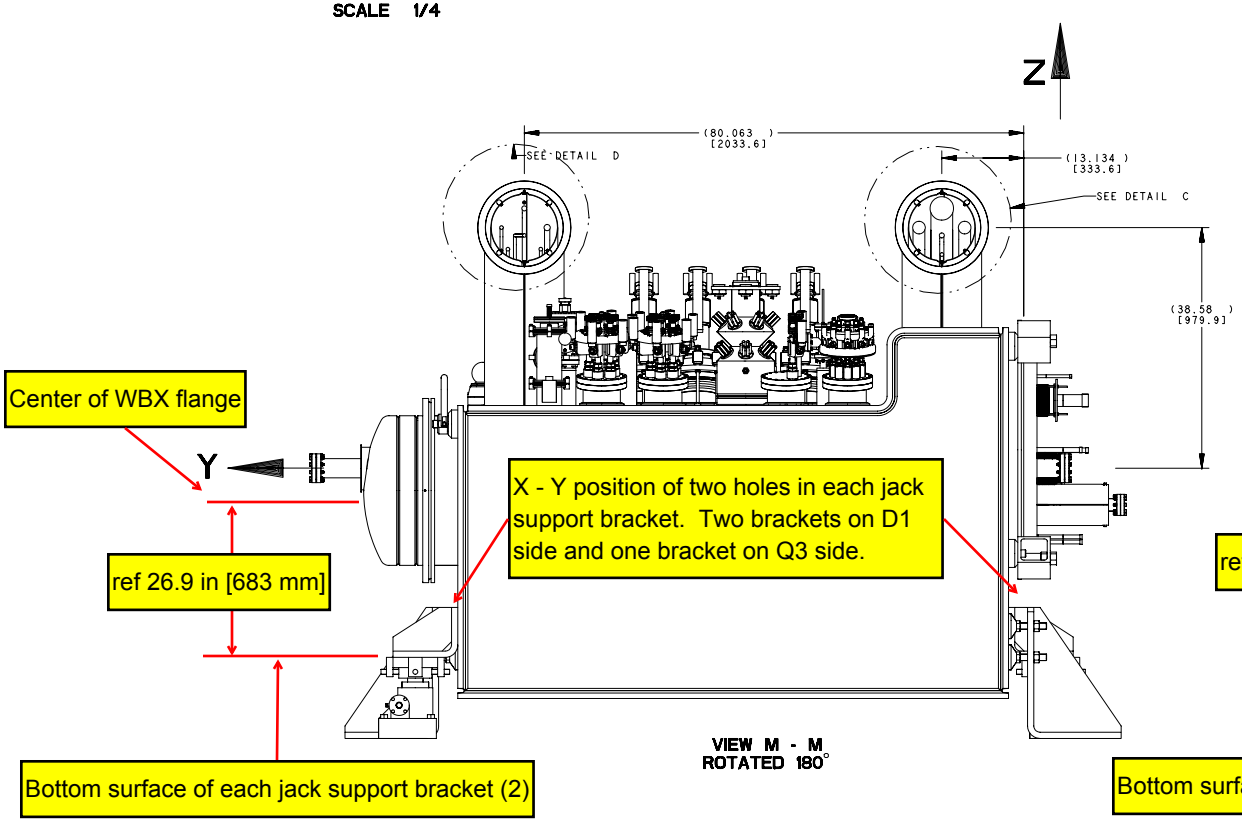

VIEW M - M
ROTATED 180°

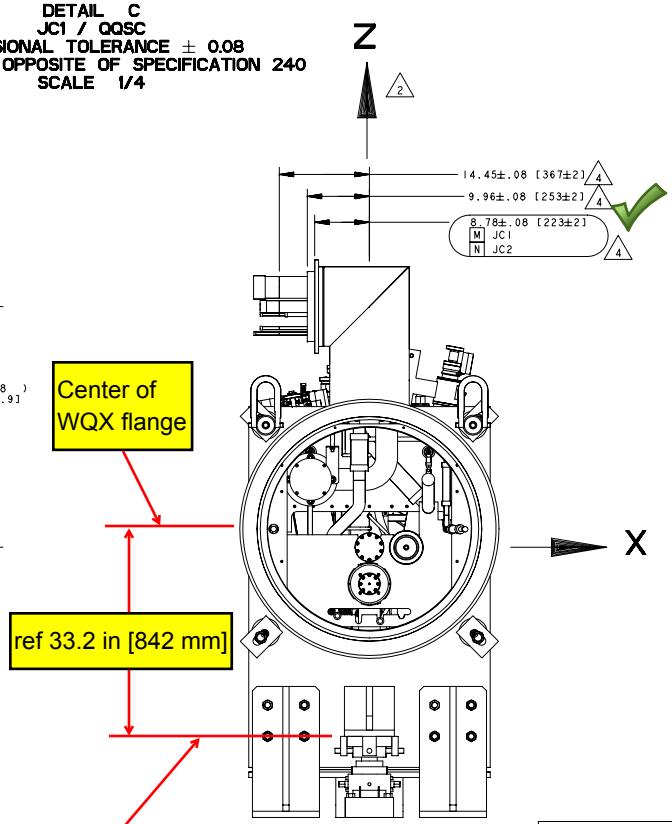

THIRD ANGLE PROJECTION

ERNEST ORLANDO LAWRENCE BERKELEY NATIONAL LABORATORY
UNIVERSITY OF CALIFORNIA - BERKELEY

LHC IR FEEDBOX
MAJOR ASSEMBLY
DFBXB (IP1, RIGHT) FEED BOX ASSY

MICROFILMED:	DWG. TYPE ASSEM	DRAWN ON -	SCALE: 13/100	DO NOT SCALE PRINTS
PATENT CLEAR:	DESIGN ACCT. NO. Z5LCE2	CATEGORY CODE LH2001	DWG. NO. 24C3506	SIZE C / REV. C

SHEET 7 OF 11

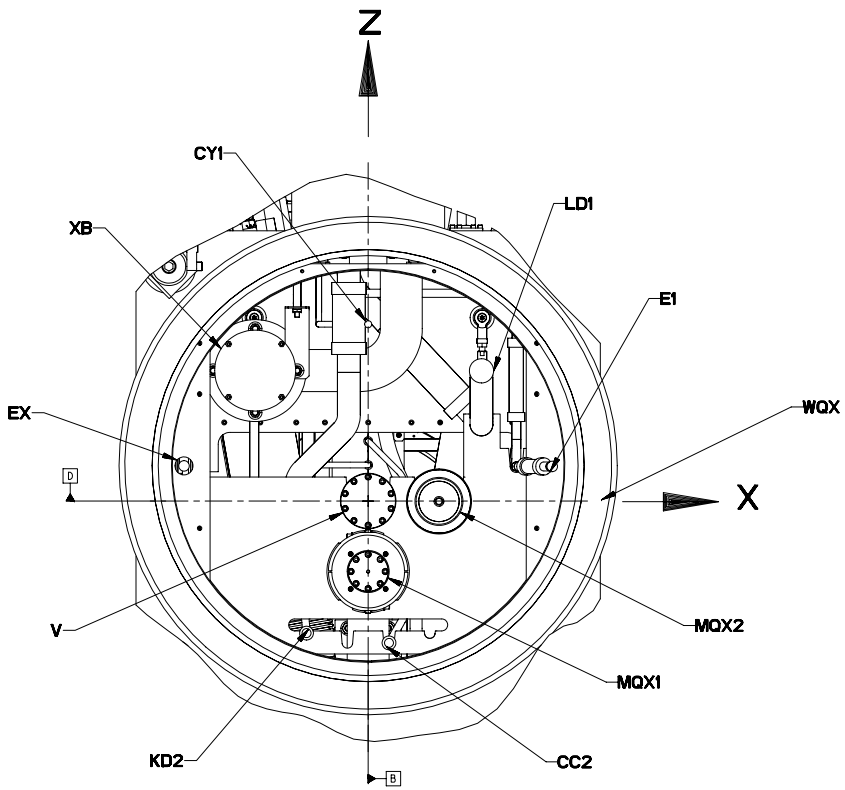

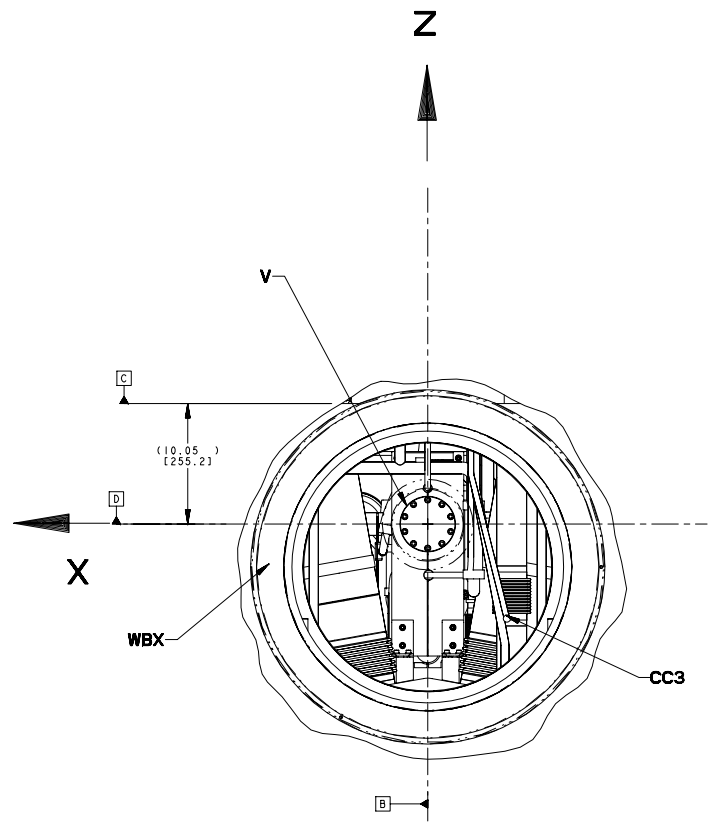

See next page

See next page

C

Q3 PIPING INTERFACE PER SPEC. LHC-DFBX-ES-210.00 REV 1.0					
DFBX	PIPE OD/ID		PIPE COORDINATES AT 300 K		
DFBX	OD in [mm]	ID in [mm]	X in [mm] ±.08	Z in [mm] ±.08	Y in [mm] ±.08
V	3.071 [78]	2.913 [73.99]	.000 [0]	.000 [0]	-2.032 [-51.61]
LD2	1.748 [44.4]	1.650 [41.91]	9.444 [239.88]	10.855 [275.72]	-6.299 [-159.99]
CC3	.626 [15.9]	.528 [13.41]	-1.735 [-44.07]	-11.772 [-299.01]	-6.299 [-159.99]
CC2	.626 [15.9]	.528 [13.41]	1.735 [44.07]	-11.822 [-300.28]	-6.299 [-159.99]
CY1	.626 [15.9]	.528 [13.41]	.000 [0]	14.742 [374.45]	-3.617 [-91.87]
E1	1.500 [38.1]	1.370 [34.8]	15.345 [389.76]	2.885 [73.28]	-6.299 [-159.99]
EX	1.500 [38.1]	1.370 [34.8]	-15.355 [-390.02]	2.929 [74.4]	-6.299 [-159.99]
MQX1	3.500 [88.9]	3.370 [85.6]	.000 [0]	-5.871 [-149.12]	-6.299 [-159.99]
MQX2	3.500 [88.9]	3.370 [85.6]	5.902 [149.91]	-.031 [-0.79]	-6.299 [-159.99]
WQX	41.535 [1055]	35.039 [890]	.000 [0]	2.953 [75.01]	.000 [0]
XB	3.500 [88.9]	3.370 [85.6]	-9.420 [-239.27]	10.876 [276.25]	-5.118 [-130]

C

D1 PIPING INTERFACE PER SPEC. LHC-DFBX-ES-230.00 REV 1.1					
PIPE	PIPE OD/ID		PIPE COORDINATES AT 300 K		
DFBX	OD in [mm]	ID in [mm]	X in [mm] ±.08	Z in [mm] ±.08	Y in [mm] ±.08
V	3.06 [77.7]	2.91 [73.9]	.000 [0]	.000 [0]	13.504 [343]
CC3	.63 [16]	.53 [13.5]	-6.604 [-167.74]	-7.879 [-200.13]	14.843 [377.01]
WBX	29.53 [750.1]	23.50 [596.9]	.000 [0]	-3.528 [-89.61]	.000 [0]

15

THIRD ANGLE PROJECTION

ERNEST ORLANDO LAWRENCE
BERKELEY NATIONAL LABORATORY
UNIVERSITY OF CALIFORNIA - BERKELEY

LHC IR FEEDBOX
MAJOR ASSEMBLY
DFBXB (IP1, RIGHT) FEED BOX ASSY

MICROFILMED:	DWG. TYPE	SHOWN ON	SCALE: 13/100	DO NOT SCALE PRINTS
	ASSEM	-	SHEET 6 OF 11	
PATENT CLEAR:	DESIGN ACCT. NO.	CATEGORY CODE	DWG. NO.	SIZE	REV.
	Z5LCE2	LH2001	24C3506	C	

DWG. NO. 24C3506 SIZE C REV. 8

Q3 Piping Dimensional Inspection - DFBXB Pipe Coordinates at 300 K			
DFBX	**X in / mm ±0.08 in**	**Z in / mm ±0.08 in**	**Y in / mm ±0.08 in**
V	0.00 0.0	-2.95 -75.0	-2.03 -51.6
LD2	9.44 239.9	7.90 200.7	-6.30 -160.0
CC3	5.14 130.5	-14.77 -375.3	-6.30 -160.0
CC2	1.74 44.1	-14.77 -375.3	-6.30 -160.0
CY1	0.00 0.0	11.79 299.5	-3.62 -91.9
E1	15.34 389.8	-0.07 -1.7	-6.30 -160.0
EX	-15.36 -390.0	-0.02 -0.6	-6.30 -160.0
MQX1	0.00 0.0	-8.82 -224.1	-6.30 -160.0
MQX2	5.90 149.9	-2.98 -75.8	-6.30 -160.0
WQX	0.00 0.0	0.00 0.0	0.00 0.0
XB	0.00 0.0	7.92 201.3	-5.12 -130.0

D1 Piping Dimensional Inspection - DFBXB Pipe Coordinates at 300 K			
DFBX	**X in / mm ±0.08 in**	**Z in / mm ±0.08 in**	**Y in / mm ±0.08 in**
V	0.00 0.0	3.53 89.6	13.50 343.0
CC3	-6.60 -167.7	-4.35 -110.5	14.84 377.0
WBX	0.00 0.0	0.00 0.0	0.00 0.0

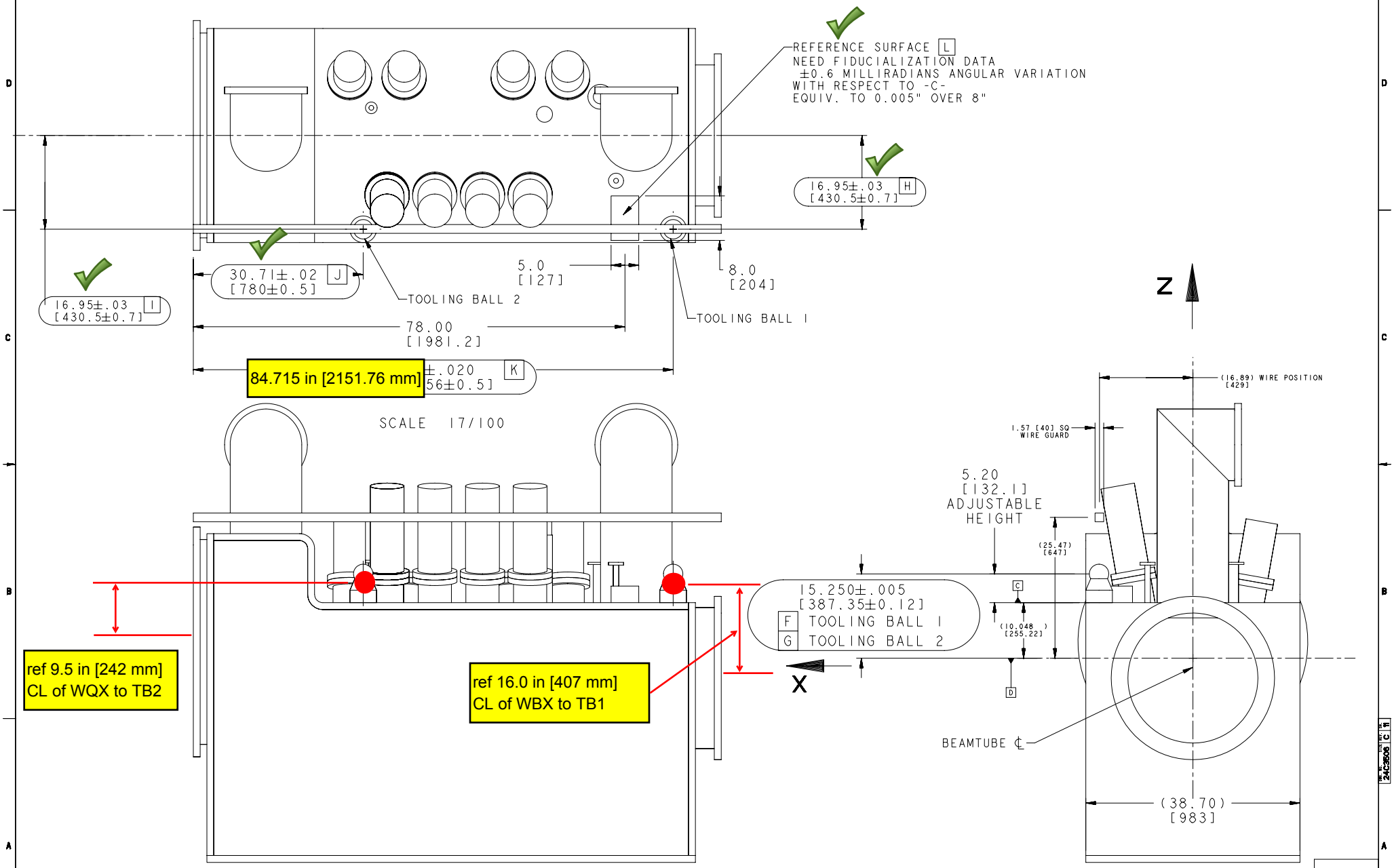

FIDUCIAL LAYOUT INFORMATION

THIRD ANGLE PROJECTION

ERNEST ORLANDO LAWRENCE BERKELEY NATIONAL LABORATORY
UNIVERSITY OF CALIFORNIA - BERKELEY

LHC IR FEEDBOX
MAJOR ASSEMBLY
DFBXB (IP1, RIGHT) FEED BOX ASSY

MICROFILMED:	DWG. TYPE: ASSEM	DRAWN ON: -	SCALE: 13/100	DO NOT SCALE PRINTS
PATENT CLEAR:	DESIGN ACCT. NO.: Z5LCE2	CATEGORY CODE: LH2001	DWG. NO.: 24C3506	SIZE: C REV.: C

SHEET 1 OF 1

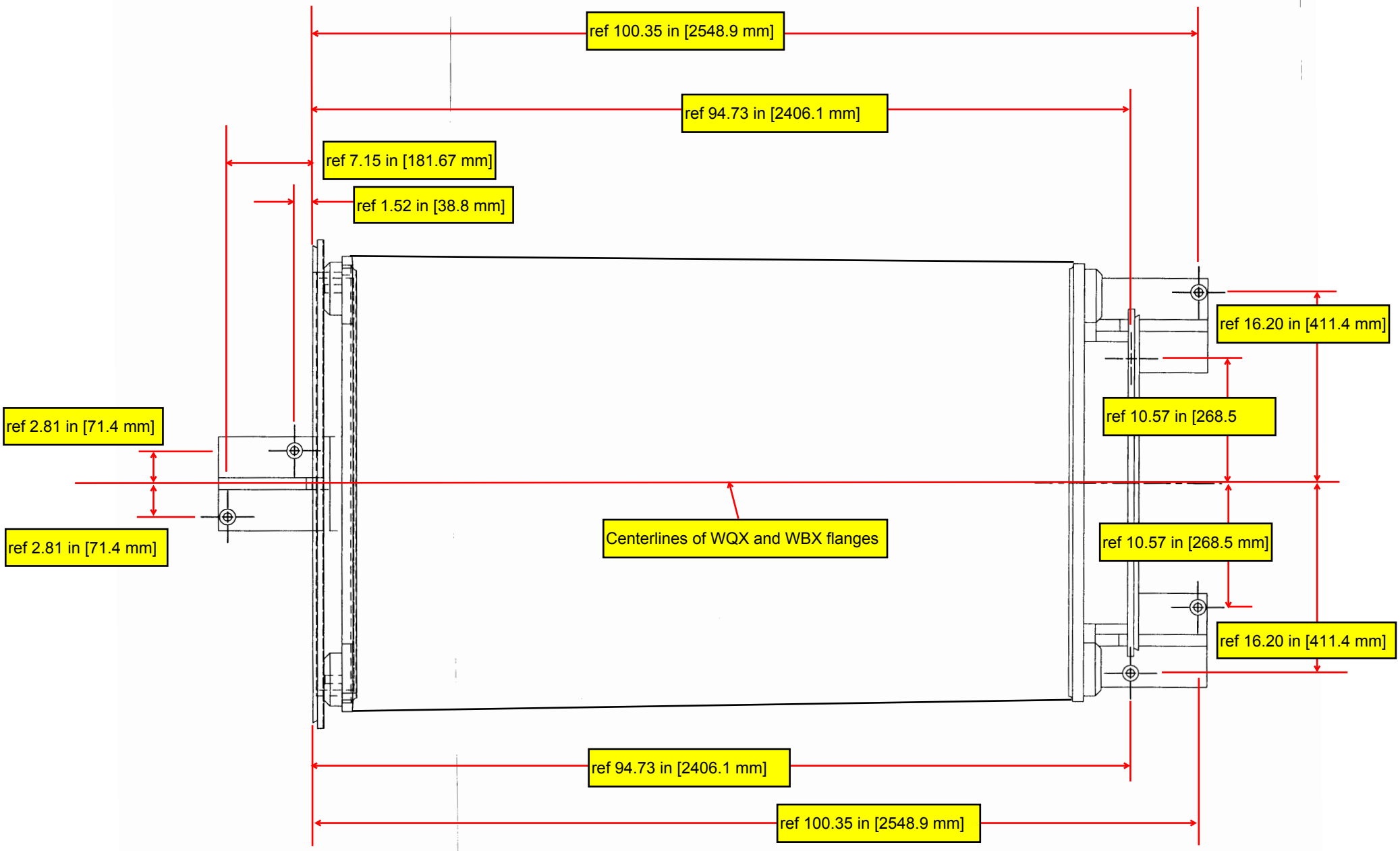
ref 100.35 in [2548.9 mm]
ref 94.73 in [2406.1 mm]
ref 7.15 in [181.67 mm]
ref 1.52 in [38.8 mm]
ref 16.20 in [411.4 mm]
ref 10.57 in [268.5
ref 2.81 in [71.4 mm]
ref 2.81 in [71.4 mm]
Centerlines of WQX and WBX flanges
ref 10.57 in [268.5 mm]
ref 16.20 in [411.4 mm]
ref 94.73 in [2406.1 mm]
ref 100.35 in [2548.9 mm]