HTS Leads Installation Reports

Box "C"

FERMILAB
Technical Division

Installation of the LHC HTS Current Leads

Lead: DFLX 26

Signed Wayne E. Johnson Date 7-16-05

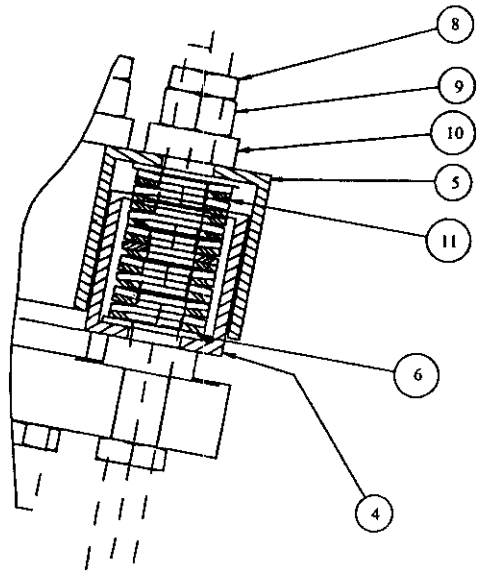

Figure 1.31b An installed Belleville washer assembly.

1.29 Tighten the 6 Belleville washer assemblies to apply load to the PEEK seal.

1.29.1 Back down the tensioning rod nuts used in Step 1.25 so they are about 5 mm below the power lead flange.

1.29.2 Tighten the 6 loading nuts finger-tight. With adjustable parallels, measure and record the gap 'y' indicated in Figure 1.31a between Item 5 (Belleville washer holder upper half) and the power lead top flange at the 6 locations specified in Figure 1.32.2. Units are mm.

A 15.43 B 15.51 C 15.80 D 15.12 E 16.12 F 15.39

1.29.3 For each of the six studs: remove the adjustable parallel, adjust it for 1.8 mm of compression, and return the adjustable parallel into position under the Belleville washer holder. Record the adjusted heights of the adjustable parallels. Units are mm.

A 13.63 B 13.71 C 14.00 D 13.32 E 14.32 F 13.59

1.29.4 Using the sequence A through F in Figure 1.32.2, sequentially tighten the loading nuts ¼ turn until the total compression is 1.8 mm at each of the six locations. As each loading nut is tightened ¼ turn, check off the appropriate line.

A ✓ B ✓ C ✓ D ✓ E ✓ F ✓

A ✓ B ✓ C ✓ D ✓ E ✓ F ✓

A ✓ B ✓ C ✓ D ✓ E ✓ F ✓

A ✓ B ✓ C ✓ D ✓ E ✓ F ✓

A ✓ B ✓ C ✓ D ✓ E ✓ F ✓

A ✓ B ____ C ____ D ____ E ____ F ✓

A ____ B ____ C ____ D ____ E ____ F ____

A ____ B ____ C ____ D ____ E ____ F ____

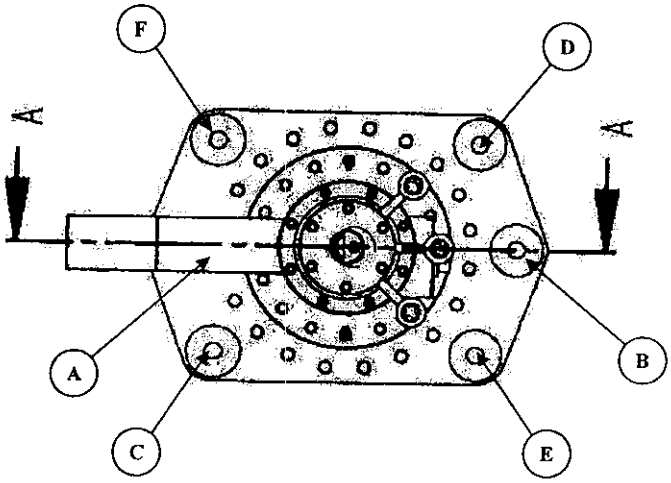

Figure 1.32.2 The specified sequence for tightening the Belleville washer assemblies.

1.29.5 Remove the adjustable parallels from under each Belleville washer assembly, then replace them and measure the final gaps 'y' in Figure 1.31a. Units are mm.

A 13.54 B 13.72 C 14.02 D 13.31 E 14.19 F 13.58

1.29.6 Attach a Conflat flange with a pressure gauge and a fill valve to the gas outlet port. Pressurize to 10 psig. The seal is acceptable if the pressure loss is less than 1 psi after 2 minutes.

1.30 Reduce compression of Belleville washer assemblies.

1.30.1 Remove the Teflon centering ring from the installed power lead.

1.30.2 Back off the loading nuts sequentially to reduce the Belleville compression to 0.75 mm (0.030 in).

1.31 Tighten down the jam nuts to secure the loading nuts on the installed Belleville washer assemblies.

Box "C"

FERMILAB
Technical Division

Installation of the LHC HTS Current Leads

Lead: DFLX 39

Signed Wayne E. John Date 7-16-05

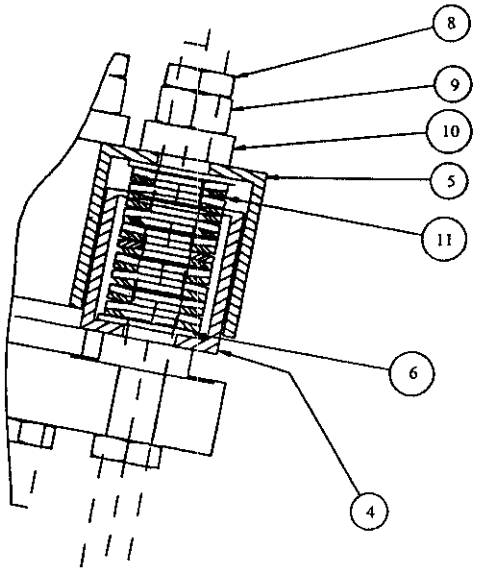

Figure 1.31b An installed Belleville washer assembly.

1.29 Tighten the 6 Belleville washer assemblies to apply load to the PEEK seal.

1.29.1 Back down the tensioning rod nuts used in Step 1.25 so they are about 5 mm below the power lead flange.

1.29.2 Tighten the 6 loading nuts finger-tight. With adjustable parallels, measure and record the gap 'y' indicated in Figure 1.31a between Item 5 (Belleville washer holder upper half) and the power lead top flange at the 6 locations specified in Figure 1.32.2. Units are mm.

A 15.18 B 15.63 C 15.61 D 15.56 E 16.10 F 15.70

1.29.3 For each of the six studs: remove the adjustable parallel, adjust it for 1.8 mm of compression, and return the adjustable parallel into position under the Belleville washer holder. Record the adjusted heights of the adjustable parallels. Units are mm.

A 13.38 B 13.83 C 13.81 D 13.76 E 14.30 F 13.90

1.29.4 Using the sequence A through F in Figure 1.32.2, sequentially tighten the loading nuts ¼ turn until the total compression is 1.8 mm at each of the six locations. As each loading nut is tightened ¼ turn, check off the appropriate line.

A ✓ B ✓ C ✓ D ✓ E ✓ F ✓

A ✓ B ✓ C ✓ D ✓ E ✓ F ✓

A ✓ B ✓ C ✓ D ✓ E ✓ F ✓

A ✓ B ✓ C ✓ D ✓ E ✓ F ✓

A ✓ B ✓ C ✓ D ✓ E ✓ F ✓

A ✓ B ✓ C _____ D _____ E _____ F ✓

A _____ B _____ C _____ D _____ E _____ F _____

A _____ B _____ C _____ D _____ E _____ F _____

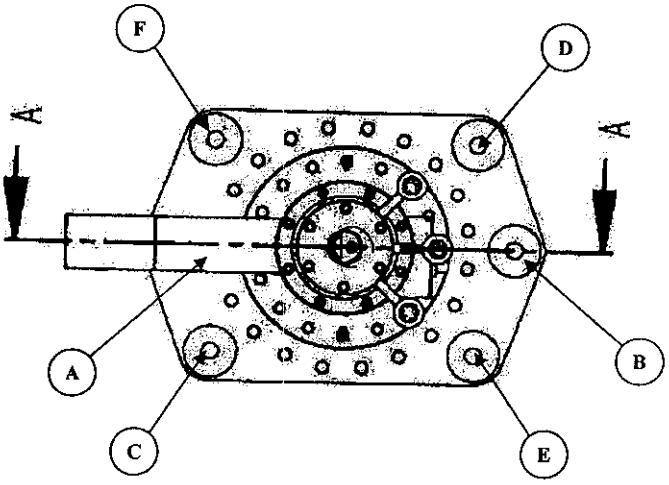

Figure 1.32.2 The specified sequence for tightening the Belleville washer assemblies.

1.29.5 Remove the adjustable parallels from under each Belleville washer assembly, then replace them and measure the final gaps 'y' in Figure 1.31a. Units are mm.

A 13.53 B 13.75 C 13.76 D 13.89 E 14.33 F 13.84

1.29.6 Attach a Conflat flange with a pressure gauge and a fill valve to the gas outlet port. Pressurize to 10 psig. The seal is acceptable if the pressure loss is less than 1 psi after 2 minutes.

1.30 Reduce compression of Belleville washer assemblies.

1.30.1 Remove the Teflon centering ring from the installed power lead.

1.30.2 Back off the loading nuts sequentially to reduce the Belleville compression to 0.75 mm (0.030 in).

1.31 Tighten down the jam nuts to secure the loading nuts on the installed Belleville washer assemblies.

Box "C"

FERMILAB
Technical Division

Installation of the LHC HTS Current Leads

Lead: DFLX 40

Signed Wayne E. John Date 7-16-03

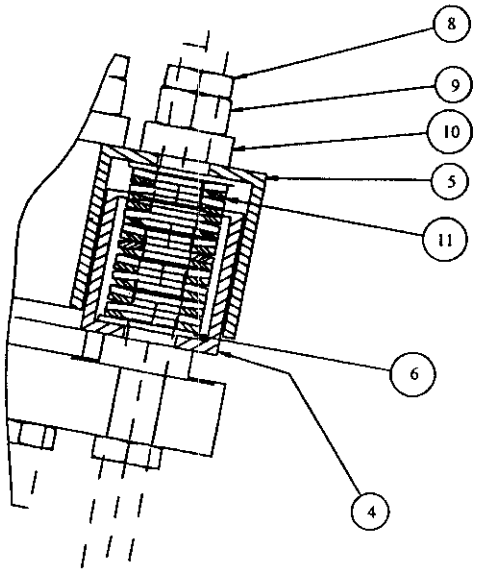

Figure 1.31b An installed Belleville washer assembly.

1.29 Tighten the 6 Belleville washer assemblies to apply load to the PEEK seal.

1.29.1 Back down the tensioning rod nuts used in Step 1.25 so they are about 5 mm below the power lead flange.

1.29.2 Tighten the 6 loading nuts finger-tight. With adjustable parallels, measure and record the gap 'y' indicated in Figure 1.31a between Item 5 (Belleville washer holder upper half) and the power lead top flange at the 6 locations specified in Figure 1.32.2. Units are mm.

A 15.17 B 15.85 C 15.87 D 15.80 E 15.81 F 15.70

1.29.3 For each of the six studs: remove the adjustable parallel, adjust it for 1.8 mm of compression, and return the adjustable parallel into position under the Belleville washer holder. Record the adjusted heights of the adjustable parallels. Units are mm.

A 13.37 B 14.05 C 14.07 D 14.00 E 14.01 F 13.90

1.29.4 Using the sequence A through F in Figure 1.32.2, sequentially tighten the loading nuts ¼ turn until the total compression is 1.8 mm at each of the six locations. As each loading nut is tightened ¼ turn, check off the appropriate line.

A ✓ B ✓ C ✓ D ✓ E ✓ F ✓

A ✓ B ✓ C ✓ D ✓ E ✓ F ✓

A ✓ B ✓ C ✓ D ✓ E ✓ F ✓

A ✓ B ✓ C ✓ D ✓ E ✓ F ✓

A ✓ B ✓ C ✓ D ✓ E ✓ F ✓

A ✓ B ✓ C ✓ D ✓ E ✓ F ✓

A ____ B ✓ C ____ D ✓ E ✓ F ____

A ____ B ____ C ____ D ____ E ____ F ____

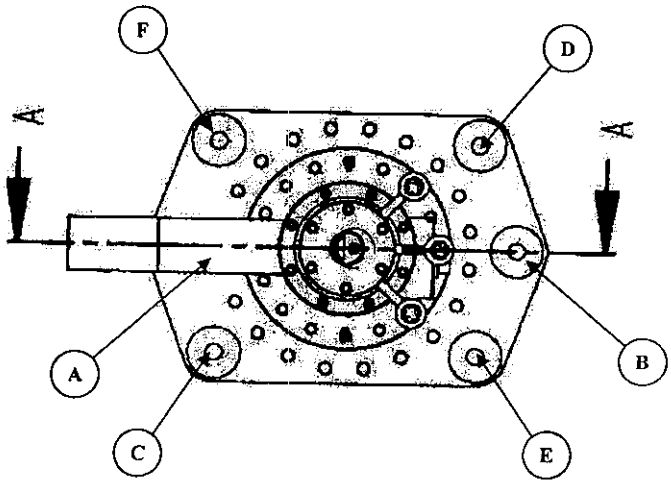

Figure 1.32.2 The specified sequence for tightening the Belleville washer assemblies.

1.29.5 Remove the adjustable parallels from under each Belleville washer assembly, then replace them and measure the final gaps 'y' in Figure 1.31a. Units are mm.

A 13.47 B 13.70 C 14.15 D 14.0 E 14.03 F 13.38

1.29.6 Attach a Conflat flange with a pressure gauge and a fill valve to the gas outlet port. Pressurize to 10 psig. The seal is acceptable if the pressure loss is less than 1 psi after 2 minutes.

1.30 Reduce compression of Belleville washer assemblies.

1.30.1 Remove the Teflon centering ring from the installed power lead.

1.30.2 Back off the loading nuts sequentially to reduce the Belleville compression to 0.75 mm (0.030 in).

1.31 Tighten down the jam nuts to secure the loading nuts on the installed Belleville washer assemblies.

Box "C"

FERMILAB
Technical Division

Installation of the LHC HTS Current Leads

Lead: DFLX 25

Signed _____ Date 7-16-05

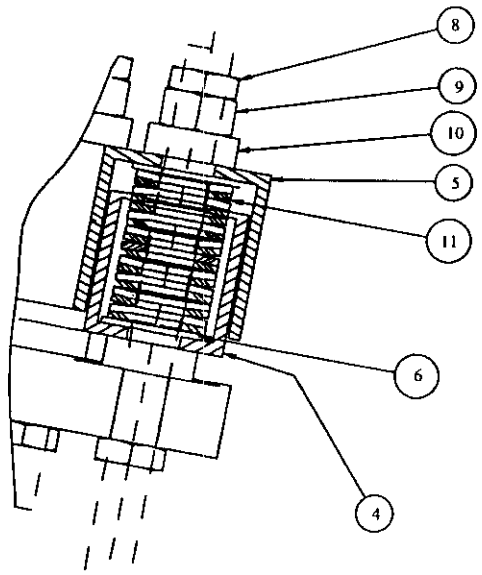

Figure 1.31b An installed Belleville washer assembly.

1.29 Tighten the 6 Belleville washer assemblies to apply load to the PEEK seal.

1.29.1 Back down the tensioning rod nuts used in Step 1.25 so they are about 5 mm below the power lead flange.

1.29.2 Tighten the 6 loading nuts finger-tight. With adjustable parallels, measure and record the gap 'y' indicated in Figure 1.31a between Item 5 (Belleville washer holder upper half) and the power lead top flange at the 6 locations specified in Figure 1.32.2. Units are mm.

A 16.07 B 16.20 C 15.70 D 15.91 E 16.35 F 15.44

1.29.3 For each of the six studs: remove the adjustable parallel, adjust it for 1.8 mm of compression, and return the adjustable parallel into position under the Belleville washer holder. Record the adjusted heights of the adjustable parallels. Units are mm.

A 14.27 B 14.40 C 13.90 D 14.11 E 14.55 F 13.64

1.29.4 Using the sequence A through F in Figure 1.32.2, sequentially tighten the loading nuts ¼ turn until the total compression is 1.8 mm at each of the six locations. As each loading nut is tightened ¼ turn, check off the appropriate line.

A ✓ B ✓ C ✓ D ✓ E ✓ F ✓

A ✓ B ✓ C ✓ D ✓ E ✓ F ✓

A ✓ B ✓ C ✓ D ✓ E ✓ F ✓

A ✓ B ✓ C ✓ D ✓ E ✓ F ✓

A ✓ B ✓ C ✓ D ✓ E ✓ F ✓

A ✓ B ✓ C ✓ D ____ E ✓ F ✓

A ____ B ____ C ____ D ____ E ____ F ____

A ____ B ____ C ____ D ____ E ____ F ____

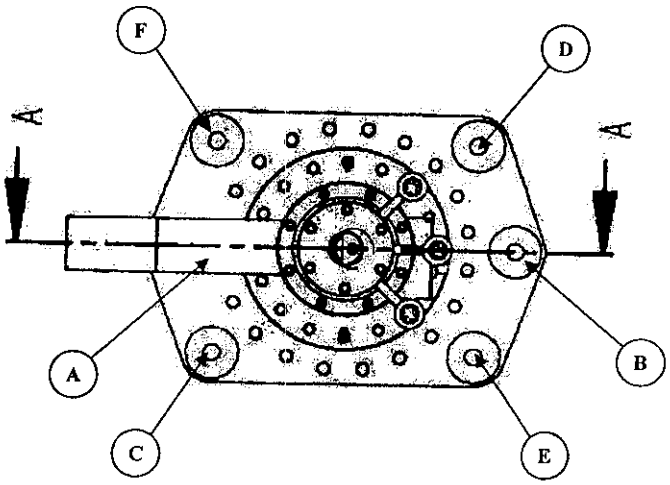

Figure 1.32.2 The specified sequence for tightening the Belleville washer assemblies.

1.29.5 Remove the adjustable parallels from under each Belleville washer assembly, then replace them and measure the final gaps 'y' in Figure 1.31a. Units are mm.

A 14.68 B 14.50 C 13.89 D 14.23 E 14.59 F 13.74

1.29.6 Attach a Conflat flange with a pressure gauge and a fill valve to the gas outlet port. Pressurize to 10 psig. The seal is acceptable if the pressure loss is less than 1 psi after 2 minutes.

1.30 Reduce compression of Belleville washer assemblies.

1.30.1 Remove the Teflon centering ring from the installed power lead.

1.30.2 Back off the loading nuts sequentially to reduce the Belleville compression to 0.75 mm (0.030 in).

1.31 Tighten down the jam nuts to secure the loading nuts on the installed Belleville washer assemblies.

Box "C"

FERMILAB
Technical Division

Installation of the LHC HTS Current Leads

Lead: DFLX 18

Signed Wayne S. John Date 7-16-05

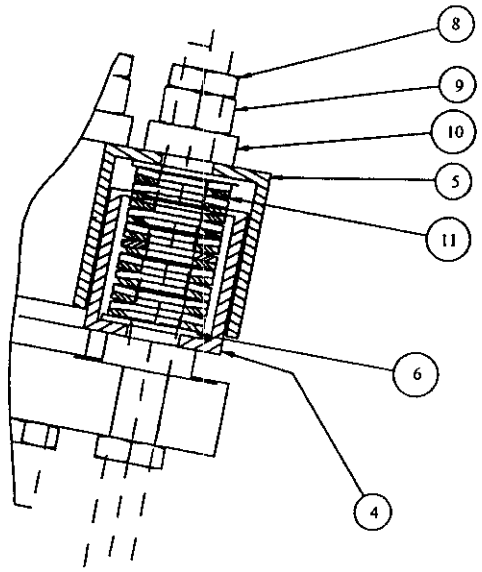

Figure 1.31b An installed Belleville washer assembly.

1.29 Tighten the 6 Belleville washer assemblies to apply load to the PEEK seal.

1.29.1 Back down the tensioning rod nuts used in Step 1.25 so they are about 5 mm below the power lead flange.

1.29.2 Tighten the 6 loading nuts finger-tight. With adjustable parallels, measure and record the gap 'y' indicated in Figure 1.31a between Item 5 (Belleville washer holder upper half) and the power lead top flange at the 6 locations specified in Figure 1.32.2. Units are mm.

A 15.82 B 15.59 C 15.49 D 15.96 E 15.84 F 15.59

1.29.3 For each of the six studs: remove the adjustable parallel, adjust it for 1.8 mm of compression, and return the adjustable parallel into position under the Belleville washer holder. Record the adjusted heights of the adjustable parallels. Units are mm.

A 14.02 B 13.79 C 13.69 D 14.16 E 14.04 F 13.79

1.29.4 Using the sequence A through F in Figure 1.32.2, sequentially tighten the loading nuts ¼ turn until the total compression is 1.8 mm at each of the six locations. As each loading nut is tightened ¼ turn, check off the appropriate line.

A ✓ B ✓ C ✓ D ✓ E ✓ F ✓

A ✓ B ✓ C ✓ D ✓ E ✓ F ✓

A ✓ B ✓ C ✓ D ✓ E ✓ F ✓

A ✓ B ✓ C ✓ D ✓ E ✓ F ✓

A ✓ B ✓ C ✓ D ✓ E ✓ F ✓

A ✓ B ____ C ✓ D ____ E ✓ F ✓

A ____ B ____ C ✓ D ____ E ✓ F ____

A ____ B ____ C ____ D ____ E ____ F ____

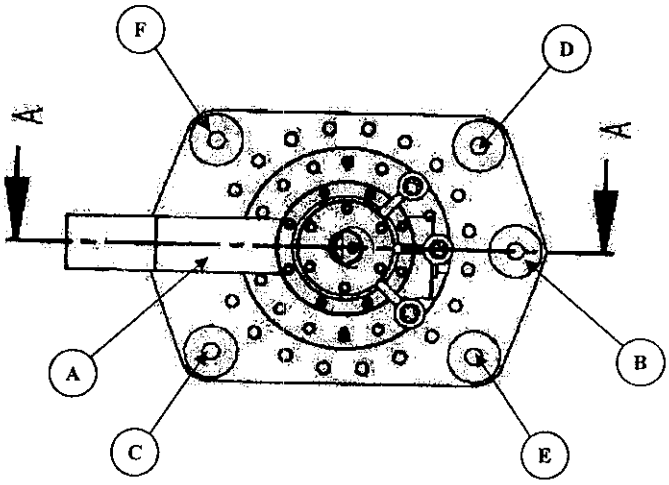

Figure 1.32.2 The specified sequence for tightening the Belleville washer assemblies.

1.29.5 Remove the adjustable parallels from under each Belleville washer assembly, then replace them and measure the final gaps 'y' in Figure 1.31a. Units are mm.

A 13.85 B 13.80 C 13.64 D 14.30 E 14.15 F 13.84

1.29.6 Attach a Conflat flange with a pressure gauge and a fill valve to the gas outlet port. Pressurize to 10 psig. The seal is acceptable if the pressure loss is less than 1 psi after 2 minutes.

1.30 Reduce compression of Belleville washer assemblies.

1.30.1 Remove the Teflon centering ring from the installed power lead.

1.30.2 Back off the loading nuts sequentially to reduce the Belleville compression to 0.75 mm (0.030 in).

1.31 Tighten down the jam nuts to secure the loading nuts on the installed Belleville washer assemblies.

PEEK SEAL
10 psi

FERMILAB
Technical Division

Installation of the Box "C" LHC HTS Current Leads

Lead: DFLX 33

Signed Glen Koveny Date 7/22/05

1.32.2 Tighten the 6 loading nuts finger-tight. With adjustable parallels, measure and record the gap 'y' indicated in Figure 1.31a between Item 5 (Belleville washer holder upper half) and the power lead top flange at the 6 locations specified in Figure 1.32.2. Units are mm.

A 15.35 B 15.45 C 15.54 D 16.59 E 16.04 F 16.28

1.32.3 For each of the six studs: remove the adjustable parallel, adjust it for 1.8 mm of compression, and return the adjustable parallel into position under the Belleville washer holder. Record the adjusted heights of the adjustable parallels. Units are mm.

A 13.55 B 13.65 C 13.74 D 14.79 E 14.24 F 14.48

1.32.4 Using the sequence A through F in Figure 1.32.2, sequentially tighten the loading nuts ¼ turn until the total compression is 1.8 mm at each of the six locations. As each loading nut is tightened ¼ turn, check off the appropriate line.

A X B X C X D X E X F X

A X B X C X D X E X F X

A X B X C X D OK E X F OK

A X B OK C X D OK E OK F OK

A X B X C X D OK E OK F OK

A X B X C X D OK E K F OK

A ___ B X C X D OK E OK F OK

A OK B OK C OK D OK E OK F OK

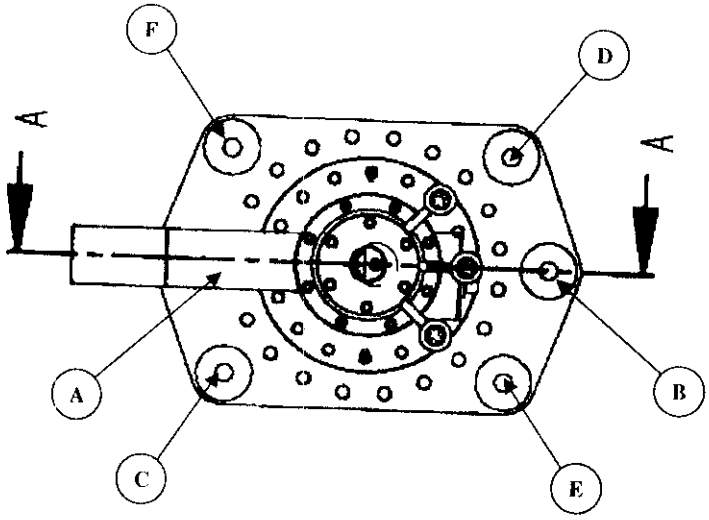

Figure 1.32.2 The specified sequence for tightening the Belleville washer assemblies.

1.32.5 Remove the adjustable parallels from under each Belleville washer assembly, then replace them and measure the final gaps 'y' in Figure 1.31a. Units are mm.

A 13.05 B 13.40 C 13.68 D 14.50 E 14.01 F 14.07

1.33 Remove the Teflon centering shim blocks from the installed power lead.

1.34 Tighten down the jam nuts to secure the loading nuts on the installed Belleville washer assemblies.

1.35 Tighten the tensioning stud nuts against the underside of the power lead flange to provide stability during transportation.

1.36 Bolt a heater onto the power lead. Use thermally conductive grease at the interface between the heater and the power lead.