AMI Leads Documentation

Current Lead Test Data Sheet

Current Lead Serial Number 3W1111A

Dwg and Rev Number 03-9551-3006-R1

Test #	Test Title		Date	Technician
1	Dimensional Check			

Dimension A — 11-18-03 JACK

Lead #1	5 23/32
Lead #2	5 23/32
Lead #3	5 47/64
Lead #4	5 3/4
Lead #5	5 23/32
Lead #6	5 47/64
Lead #7	5 23/32
Lead #8	5 47/64
Lead #9	5 47/64
Lead #10	5 3/4

Dimension B — 11-18-03 JACK

Lead #1	9 39/64
Lead #2	9 39/64
Lead #3	9 39/64
Lead #4	9 41/64
Lead #5	9 39/64
Lead #6	9 41/64
Lead #7	9 39/64
Lead #8	9 5/8
Lead #9	9 5/8
Lead #10	9 41/64

Dimension C — 11-18-03 JACK

Lead #1	39 13/64
Lead #2	39 3/16
Lead #3	39 3/16
Lead #4	39 11/64
Lead #5	39 3/16
Lead #6	39 3/16
Lead #7	39 3/16
Lead #8	39 3/16
Lead #9	39 3/16
Lead #10	39 3/16

Test #	Test Title		Date	Technician

Dimension D — 11-18-03 JACK

Lead #1 31 1/4
Lead #2 31 1/4
Lead #3 31 17/64
Lead #4 31 1/4
Lead #5 31 1/4
Lead #6 31 1/4
Lead #7 31 1/4
Lead #8 31 1/4
Lead #9 31 1/4
Lead #10 31 1/4

Dimension E — 11-18-03 JACK

Lead #1 6
Lead #2 6
Lead #3 6
Lead #4 6
Lead #5 6
Lead #6 6
Lead #7 6
Lead #8 6
Lead #9 6
Lead #10 6

Dimension F 5 9/64 — 11-18-03 JACK

Dimension G — 11-18-03 JACK

Lead #1 0
Lead #2 0
Lead #3 0
Lead #4 0
Lead #5 1/64
Lead #6 1/64
Lead #7 1/64
Lead #8 0
Lead #9 0
Lead #10 0

Dimension H 00 2 — 11-18-03 JACK

Test #	Test Title		Date	Technician
2	**Pressure Test**			
	Result (circle one)	Pass/Fail	11-11-03	RF
	Degradation of pressure?	RAVE		
3	**Leak Test**			
	Result (circle one)	Pass/Fail	11-12-03	RF
	Leak rate achieved?	1×10^{-9}		
4	**Voltage Isolation Test in Air**			
	Result (circle one)	Pass/Fail	11-12-03	BM
	Isolation voltage achieved	8KV/4KV		
5	**Voltage Isolation Test in Dewar**			
	Result (circle one)	Pass/Fail	12-4-03	GB
	Isolation voltage achieved	600V		
6	**Full Current Test**			
	Result (circle one)	Pass/Fail	12-4-03	GB
	Max voltage across lead			
	Lead			
	Lead			
	Lead			
	Lead			
	Lead			
	Lead			
	Lead			
	Lead			
	Lead			
	Lead			

Project Engineer [signature] 12/4/03

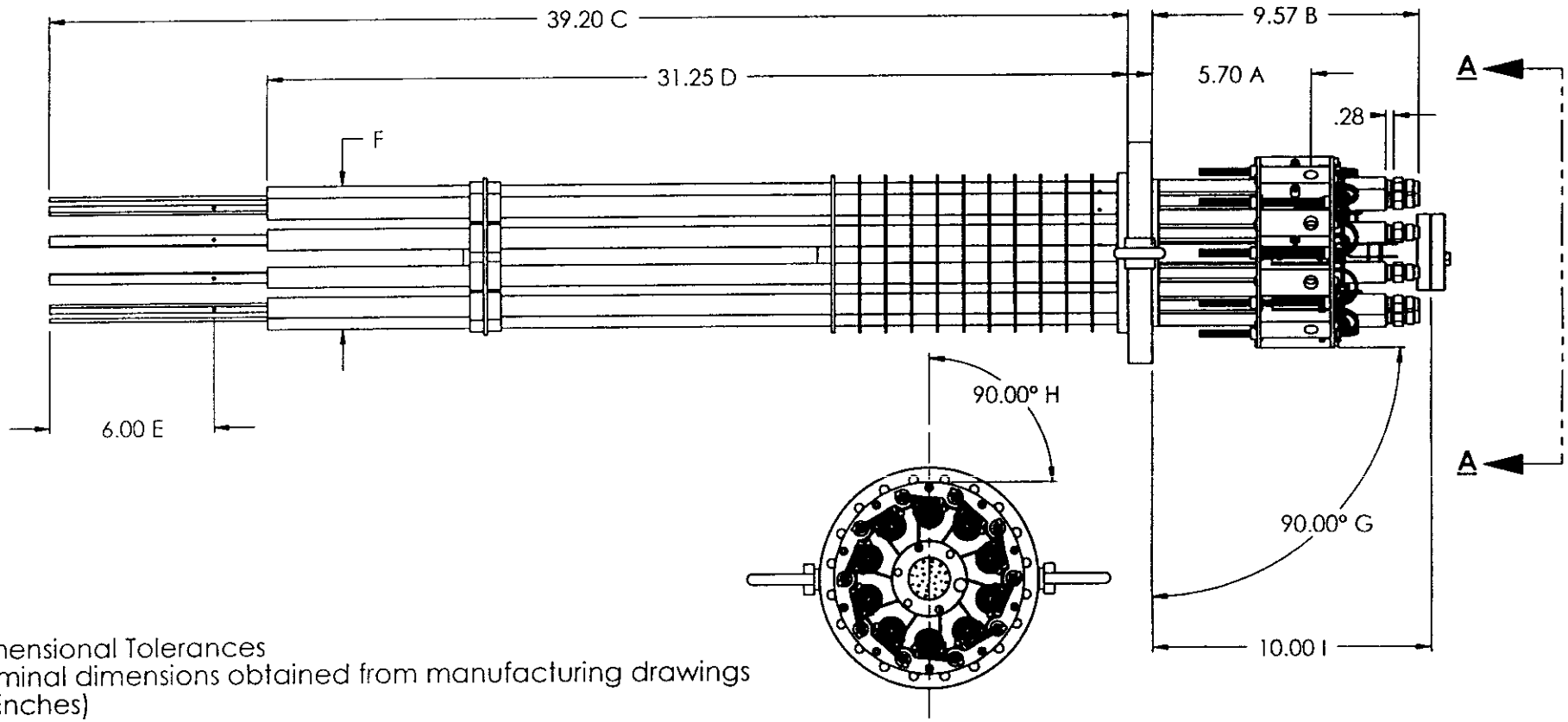

Dimensional Tolerances
Nominal dimensions obtained from manufacturing drawings
(in inches)

A (Top of flange to power cable connection) - Nominal +/- .10"
B (Top of flange to cooling gas outlets) - Nominal +/- .10"
C (Bottom of flange to end of busbar) - Nominal +/- .10"
D (Bottom of flange to end of G-10 insulating tube - Nominal +/- .10"
E (Bottom of busbar to voltage tap hole) - Nominal +/- .10"
F (Lead envelope outer diameter) - < 5.15 for 120 Amp lead < 5.10 for 600 Amp lead
G (Datum to conductor face orientation) - Perpendicular +/- .03"
H (Datum to conductor face orientation) - Perpendicular +/- .03"
I (Top of flange to split line of feedthrough (not required by LBNL) - +.10"/- .20"

PROPRIETARY INFORMATION
THE INFORMATION CONTAINED IN THIS DRAWING IS THE SOLE PROPERTY OF AMERICAN MAGNETICS, INC., OAK RIDGE, TN., 37830. ANY REPRODUCTION IN PART OR WHOLE WITHOUT THE WRITTEN PERMISSION OF AMERICAN MAGNETICS, INC. IS STRICTLY PROHIBITED.

TOLERANCES UNLESS OTHERWISE SPECIFIED	**AMERICAN MAGNETICS INC.**			
FRACTIONS ± 1/64 XX DECIMALS ± 0.01 XXX DECIMALS ± 0.005 ANGLES ± 0°-30' BREAK SHARP EDGES 1/64 MAX SURFACE FINISH = 63 RMS	AMI	DESCRIPTION **LBNL** 120 AMP VCCL DIMENSIONAL REQ'S		
UNLESS OTHERWISE SPECIFIED ALL DIMENSIONS ARE IN INCHES	DATE: 6/18/03	DRAWN BY: GJL	REVIEWED BY:	APPROVED BY:
	SCALE 1:6	SIZE A	DRAWING NO 03-9551-3006	SHEET 1 OF 1	REV 1

Current Lead Test Data Sheet

Current Lead Serial Number 3W1111B

Dwg and Rev Number 03-9554-3005-R0

Test #	Test Title		Date	Technician
1	Dimensional Check			

Dimension A 11-18-03 JACK

Lead #1	4 57/64	4.89
Lead #2	4 7/8	
Lead #3	4 57/64	
Lead #4	4 57/64	
Lead #5	4 57/64	
Lead #6	4 57/64	
Lead		
Lead		
Lead		
Lead		

Dimension B 11-18-03 JACK

Lead #1	9 21/32	9.66
Lead #2	9 21/32	
Lead #3	9 21/32	
Lead #4	9 21/32	
Lead #5	9 41/64	9.64
Lead #6	9 21/32	
Lead		
Lead		
Lead		
Lead		

Dimension C 11-18-03 JACK

Lead #1	39 1/8	
Lead #2	39 7/64	
Lead #3	39 3/32	
Lead #4	39 1/8	
Lead #5	39 1/8	
Lead #6	39 1/8	
Lead		
Lead		
Lead		
Lead		

Test #	Test Title		Date	Technician
	Dimension D			
	Lead #1	30 9/32	11-18-03	JACK
	Lead #2	30 9/32		
	Lead #3	30 9/32		
	Lead #4	30 9/32		
	Lead #5	30 9/32		
	Lead #6	30 9/32		
	Lead			
	Lead			
	Lead			
	Lead			
	Dimension E			
	Lead #1	6	11-18-03	JACK
	Lead #2	6		
	Lead #3	6		
	Lead #4	6		
	Lead #5	6		
	Lead #6	6		
	Lead			
	Lead			
	Lead			
	Lead			
	Dimension F	5 5/64	11-18-03	JACK
	Dimension G			
	Lead #1	0	11-18-03	JACK
	Lead #2	0		
	Lead #3	0		
	Lead #4	0		
	Lead #5	1/64		
	Lead #6	1/64		
	Lead			
	Lead			
	Lead			
	Lead			
	Dimension H	.002	11-18-03	JACK

Test #	Test Title		Date	Technician
2	**Pressure Test** Result (circle one) Degradation of pressure?	Pass/Fail NONE	11-14-03	RF
3	**Leak Test** Result (circle one) Leak rate achieved?	Pass/Fail 4×10^{-10}	11-17-03	RF
4	**Voltage Isolation Test In Air** Result (circle one) Isolation voltage achieved	Pass/Fail 2KV/4KV	11-17-03	BM
5	**Voltage Isolation Test in Dewar** Result (circle one) Isolation voltage achieved	Pass/Fail 600V	12-1-03	GB
6	**Full Current Test** Result (circle one) Max voltage across lead	Pass/Fail	12-1-03	GB

Lead _____
Lead _____
Lead _____
Lead _____
Lead _____
Lead _____
Lead _____
Lead _____
Lead _____
Lead _____

Project Engineer [signature] 12/4/03

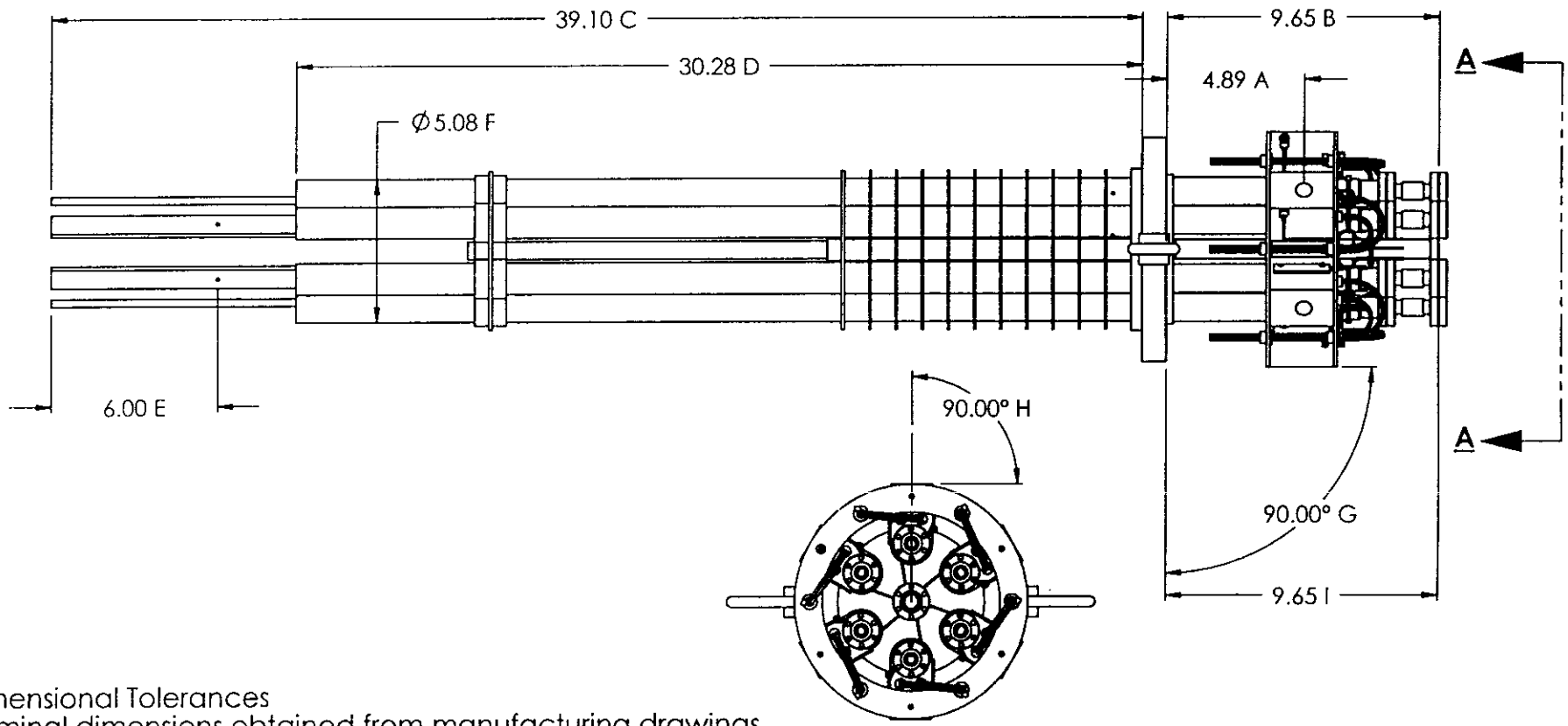

VIEW A-A

Dimensional Tolerances
Nominal dimensions obtained from manufacturing drawings
(in inches)

A (Top of flange to power cable connection) - Nominal +/- .10"
B (Top of flange to cooling gas outlets) - Nominal +/- .10"
C (Bottom of flange to end of busbar) - Nominal +/- .10"
D (Bottom of flange to end of G-10 insulating tube - Nominal +/- .10"
E (Bottom of busbar to voltage tap hole) - Nominal +/- .10"
F (Lead envelope outer diameter) - < 5.15 for 120 Amp lead < 5.10 for 600 Amp lead
G (Datum to conductor face orientation) - Perpendicular +/- .03"
H (Datum to conductor face orientation) - Perpendicular +/- .03"
I (Top of flange to split line of feedthrough (not required by LBNL) - +.10"/- .20"

PROPRIETARY INFORMATION

THE INFORMATION CONTAINED IN THIS DRAWING IS THE SOLE PROPERTY OF AMERICAN MAGNETICS, INC., OAK RIDGE, TN., 37830. ANY REPRODUCTION IN PART OR WHOLE WITHOUT THE WRITTEN PERMISSION OF AMERICAN MAGNETICS, INC. IS STRICTLY PROHIBITED.

TOLERANCES UNLESS OTHERWISE SPECIFIED FRACTIONS ± 1/64 XX DECIMALS ± 0.01 XXX DECIMALS ± 0.005 ANGLES ± 0°-30' BREAK SHARP EDGES 1/64 MAX SURFACE FINISH = 63 RMS	**AMERICAN MAGNETICS INC.**			
	AMI	DESCRIPTION **LBNL** 600 AMP VCCL DIMENSIONAL REQ'S		
UNLESS OTHERWISE SPECIFIED ALL DIMENSIONS ARE IN INCHES	DATE: 6/18/03	DRAWN BY: GJL	REVIEWED BY:	APPROVED BY:
	SCALE 1:6	SIZE A	DRAWING NO. 03-9551-3005	SHEET 1 OF 1 / REV 0

C

Current Lead Test Data Sheet

Current Lead Serial Number 3W 1125C Dwg and Rev Number 03-9557-3005-R0

Test #	Test Title		Date	Technician

1 Dimensional Check

Dimension A

Lead #7	4 57/64	12-3-03	JD
Lead #8	4 7/8		
Lead #9	4 7/8		
Lead #10	4 57/64		
Lead #11	4 57/64		
Lead #12	4 59/64		
Lead			
Lead			
Lead			
Lead			

Dimension B

Lead #7	9 21/32	12-3-03	JD
Lead #8	9 21/32		
Lead #9	9 41/64		
Lead #10	9 21/32		
Lead #11	9 21/32		
Lead #12	9 21/32		
Lead			
Lead			
Lead			
Lead			

Dimension C

Lead #7	39 1/8	12-3-03	JD
Lead #8	39 1/8		
Lead #9	39 9/64		
Lead #10	39 9/64		
Lead #11	39 1/8		
Lead #12	39 7/64		
Lead			
Lead			
Lead			
Lead			

Test #	Test Title		Date	Technician

Dimension D

Lead #7 30 9/32 — 12-3-03 — JD
Lead #8 30 19/64
Lead #9 30 19/64
Lead #10 30 9/32
Lead #11 30 9/32
Lead #12 30 9/32
Lead
Lead
Lead
Lead

Dimension E

Lead #7 6 — 12-3-03 — JD
Lead #8 6
Lead #9 6
Lead #10 6
Lead #11 6
Lead #12
Lead
Lead
Lead
Lead

Dimension F 5.065 — 12-3-03 — JD

Dimension G

Lead #7 0 — 12-3-03 — JD
Lead #8 1/64
Lead #9 1/64
Lead #10 0
Lead #11 1/64
Lead #12 1/64
Lead
Lead
Lead
Lead

Dimension H .002 — 12-3-03 — JD

Test #	Test Title		Date	Technician
2	**Pressure Test**			
	Result (circle one)	Pass/Fail	11-26-03	RF
	Degradation of pressure?	NONE		
3	**Leak Test**			
	Result (circle one)	Pass/Fail	12-1-03	RF
	Leak rate achieved?	3.8×10^{-10}		
4	**Voltage Isolation Test In Air**			
	Result (circle one)	Pass/Fail	12-1-03	BM
	Isolation voltage achieved	2KV/4KV		
5	**Voltage Isolation Test In Dewar**			
	Result (circle one)	Pass/Fail	12-15-03	GB
	Isolation voltage achieved	600V		
6	**Full Current Test**			
	Result (circle one)	Pass/Fail	12-15-03	GB
	Max voltage across lead			
	Lead			
	Lead			
	Lead			
	Lead			
	Lead			
	Lead			
	Lead			
	Lead			
	Lead			
	Lead			

Project Engineer [signature] 12/16/03

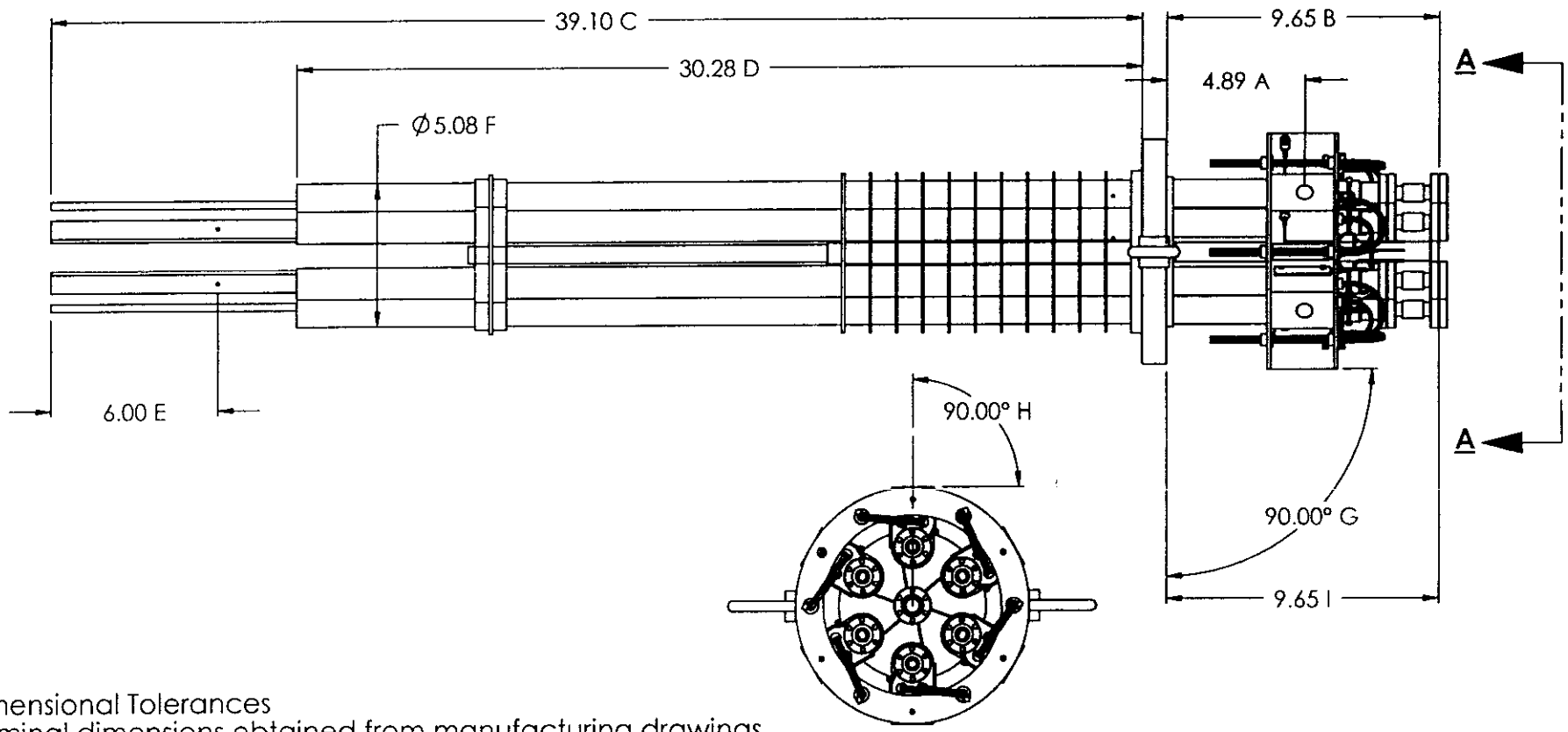

VIEW A-A

Dimensional Tolerances
Nominal dimensions obtained from manufacturing drawings
(in inches)

A (Top of flange to power cable connection) - Nominal +/- .10"
B (Top of flange to cooling gas outlets) - Nominal +/- .10"
C (Bottom of flange to end of busbar) - Nominal +/- .10"
D (Bottom of flange to end of G-10 insulating tube - Nominal +/- .10"
E (Bottom of busbar to voltage tap hole) - Nominal +/- .10"
F (Lead envelope outer diameter) - < 5.15 for 120 Amp lead < 5.10 for 600 Amp lead
G (Datum to conductor face orientation) - Perpendicular +/- .03"
H (Datum to conductor face orientation) - Perpendicular +/- .03"
I (Top of flange to split line of feedthrough (not required by LBNL) - +.10"/- .20"

PROPRIETARY INFORMATION

THE INFORMATION CONTAINED IN THIS DRAWING IS THE SOLE PROPERTY OF AMERICAN MAGNETICS, INC., OAK RIDGE, TN., 37830. ANY REPRODUCTION IN PART OR WHOLE WITHOUT THE WRITTEN PERMISSION OF AMERICAN MAGNETICS, INC. IS STRICTLY PROHIBITED.

TOLERANCES UNLESS OTHERWISE SPECIFIED
FRACTIONS ± 1/64
XX DECIMALS ± 0.01
XXX DECIMALS ± 0.005
ANGLES ± 0°-30'
BREAK SHARP EDGES 1/64 MAX
SURFACE FINISH = 63 RMS

UNLESS OTHERWISE SPECIFIED ALL DIMENSIONS ARE IN INCHES

AMERICAN MAGNETICS INC.

DESCRIPTION
LBNL
600 AMP VCCL
DIMENSIONAL REQ'S

DATE:	DRAWN BY:	REVIEWED BY:	APPROVED BY:
6/18/03	GJL		

SCALE	SIZE	DRAWING NO.	SHEET 1 OF 1	REV
1:6	A	03-9551-3005		0

C

Current Lead Test Data Sheet

Current Lead Serial Number 3W1125D Dwg and Rev Number 03-9551-3005-R0

Test #	Test Title		Date	Technician

1 Dimensional Check

Dimension A 12-3-03 JACK

Lead
Lead #13 4 57/64
Lead #14 4 57/64
Lead
Lead
Lead
Lead
Lead
Lead
Lead

Dimension B 12-3-03 JACK

Lead
Lead #13 9 21/32
Lead #14 9 21/32
Lead
Lead
Lead
Lead
Lead
Lead
Lead

Dimension C 12-3-03 JACK

Lead
Lead #13 39 7/64
Lead #14 39 9/64
Lead
Lead
Lead
Lead
Lead
Lead
Lead

Test #	Test Title		Date	Technician

Dimension D

Lead _____ 12-3-03 JACK
Lead #13 30 9/32
Lead #14 30 9/32
Lead _____
Lead _____
Lead _____
Lead _____
Lead _____
Lead _____
Lead _____

Dimension E

Lead _____ 12-3-03 JACK
Lead #13 6
Lead #14 6
Lead _____
Lead _____
Lead _____
Lead _____
Lead _____
Lead _____
Lead _____

Dimension F _____ 12-3-03 JACK

Dimension G

Lead _____ 12-3-03 JACK
Lead #13 0
Lead #14 1/64
Lead _____
Lead _____
Lead _____
Lead _____
Lead _____
Lead _____
Lead _____

Dimension H .005 12-3-03 JACK

Test #	Test Title		Date	Technician
2	**Pressure Test**			
	Result (circle one)	Pass/Fail	12-1-03	RF
	Degradation of pressure?	NONE		
3	**Leak Test**			
	Result (circle one)	Pass/Fail	12-2-03	RF
	Leak rate achieved?	4.2×10^{-10}		
4	**Voltage Isolation Test in Air**			
	Result (circle one)	Pass/Fail	12-2-03	SB
	Isolation voltage achieved	2kV / 4kV		
5	**Voltage Isolation Test in Dewar**			
	Result (circle one)	Pass/Fail	12-16-03	GB
	Isolation voltage achieved	600 V		
6	**Full Current Test**			
	Result (circle one)	Pass/Fail	12-16-03	GB
	Max voltage across lead			
	Lead			
	Lead			
	Lead			
	Lead			
	Lead			
	Lead			
	Lead			
	Lead			
	Lead			
	Lead			

Project Engineer [signature] 12/16/03

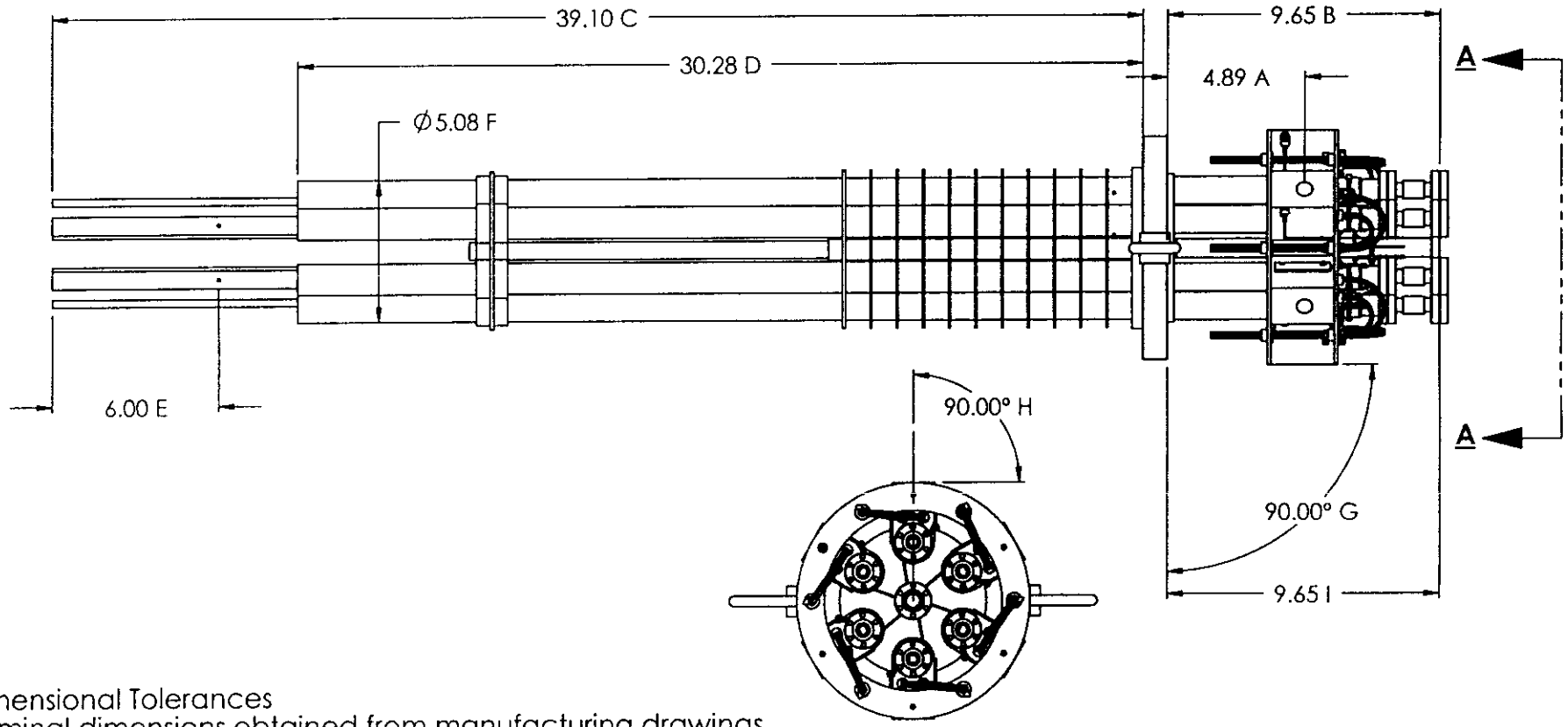

VIEW A-A

Dimensional Tolerances
Nominal dimensions obtained from manufacturing drawings
(in inches)

A (Top of flange to power cable connection) - Nominal +/- .10"
B (Top of flange to cooling gas outlets) - Nominal +/- .10"
C (Bottom of flange to end of busbar) - Nominal +/- .10"
D (Bottom of flange to end of G-10 insulating tube - Nominal +/- .10"
E (Bottom of busbar to voltage tap hole) - Nominal +/- .10"
F (Lead envelope outer diameter) - < 5.15 for 120 Amp lead < 5.10 for 600 Amp lead
G (Datum to conductor face orientation) - Perpendicular +/- .03"
H (Datum to conductor face orientation) - Perpendicular +/- .03"
I (Top of flange to split line of feedthrough (not required by LBNL) - +.10"/- .20"

PROPRIETARY INFORMATION

THE INFORMATION CONTAINED IN THIS DRAWING IS THE SOLE PROPERTY OF AMERICAN MAGNETICS, INC., OAK RIDGE, TN., 37830. ANY REPRODUCTION IN PART OR WHOLE WITHOUT THE WRITTEN PERMISSION OF AMERICAN MAGNETICS, INC. IS STRICTLY PROHIBITED.

TOLERANCES UNLESS OTHERWISE SPECIFIED	**AMERICAN MAGNETICS INC.**			
FRACTIONS ± 1/64 XX DECIMALS ± 0.01 XXX DECIMALS ± 0.005 ANGLES ± 0°-30' BREAK SHARP EDGES 1/64 MAX SURFACE FINISH = 63 RMS	AMI	DESCRIPTION **LBNL** 600 AMP VCCL DIMENSIONAL REQ'S		
UNLESS OTHERWISE SPECIFIED ALL DIMENSIONS ARE IN INCHES	DATE: 6/18/03	DRAWN BY: GJL	REVIEWED BY:	APPROVED BY:
	SCALE 1:6	SIZE A	DRAWING NO. 03-9551-3005	SHEET 1 OF 1 REV 0