Final Dimensional Inspection

Meyer Tool & Mfg., Inc.

4601 W. Southwest Hwy., Oak Lawn, Illinois 60453
708/425-9080 Fax 708/425-2612

Inspection Report

Job No.: 00918-0003 OP10
Customer: LBNL
Description: Distribution Box C
MTM Dwg/Item No.: 24C352

Inspected By: DJC / WJ
Date: 08/29/05
MTE and Set up: Romer Arm, Calipers, Scale

Dimension	Results			(3)
Dwg 24C352 Sheet 4				
Zone A8: 3.53" +/-.08"	3.537"			
Zone B8: 38.58" +/-.08"	38.575"			
Zone B8: 42.11" +/-.08"	42.112"			
Zone C6: 95.40" +/-.08"	95.372"			
Zone C6: 66.929" +/-.08"	66.894"			
Zone C4: 13.134" +/-.08"	13.099"			
Zone B3: 38.55" +/-.08"	38.567"			
Zone B3: 35.63" +/-.08"	35.594"			
Zone B2: 2.95" +/-.08"	2.973"			
Dwg 24C352 Sheet 7				
JC1 Pipe Locations X+/-.08", Y+/-.08", Z+/-.08"	X	Y	Z	
XB: -11.85", 0.00", 3.07"	-11.875"	.000"	3.084"	
LD2: -11.85", 3.66", 0.00"	-11.875"	3.656"	.000"	
LD1: -11.85", -3.66", 0.00"	-11.812"	-3.648"	.000"	
E1: -14.45", 0.00", -1.26"	-14.50"	.000"	-1.300"	
CY1: -14.45", 0.00", -4.33"	-14.457"	.000"	-4.341"	
JC2 Pipe Locations X+/-.08", Y+/-.08", Z+/-.08"				
E2: -14.45", 0.00", 3.07"	-14.500"	.000"	3.110"	
DH: -14.45", 3.66", 0.00"	-14.500"	3.664"	.000"	
LD3: -11.85", -3.661", 0.00"	-11.875"	-3.658"	.000"	
CC2: -14.45", 0.00", -1.26"	-14.450"	.000"	-1.250"	
CC1: -14.45", 2.64", -3.46"	-14.500"	2.653"	-3.481"	
CC3: -14.45", -2.64", -3.46"	-14.412"	-2.645"	-3454"	
CY2: -14.45", 0.00", -4.33"	-14.412"	.000	-4.360"	
Dwg 24C352 Sheet 8				
Q3 Pipe Locations X+/-.08", Y+/-.08", Z+/-.08"				
V: 0.00", -2.95", 2.03"	.080"	-2.973"	2.040	
LD2: -9.444", 7.90", 6.30"	-9450"	7.875"	6.890"	
~~CC3: 1.74", -14.77", 6.30"~~ N/A				
CC2: -1.74", -14.77", 6.30"	-1.753"	-14.750"	6.310"	
CY1: 0.00", 11.17", 3.62"	.000"	11.230"	3.634"	
E1: -15.34", -0.07", 6.30"	-15.353"	-.062"	6.307"	

Meyer Tool & Mfg., Inc.

4601 W. Southwest Hwy., Oak Lawn, Illinois 60453
708/425-9080 Fax 708/425-2612

Inspection Report

Job No.: 00918-0003 OP10
Customer: LBNL
Description: Distribution Box C
MTM Dwg/Item No.: 24C352

Inspected By: DJC
Date: 08/29/05
MTE and Set up: Romer Arm, Calipers, Scale

Dimension	Results X	Z	Y	(3)
EX: 15.36", -0.02", 6.30"	15.375"	-.035"	6.312"	
MQX1: 0.00", -8.82", 6.30"	.000"	* 9.028" *	6.250"	1
MQX2: -5.90", -02.98", 6.30"	-5.875	-3.00"	6.325"	
WQX (flange):0.00", 0.00", 0.00"	.000	.000	.000	
XB:0.00", 11.84", 5.12"	.000	11.875"	5.125"	
D1 Pipe Locations X+/-.08", Z+/-.08", Y+/-.08"				
V: 0.00", 3.53", -13.50"	.000	3.537"	-13.500"	
LD1: 8.359", -0.12", -13.46"	8.385	-.130"	-13.480"	
~~CC2: 5.429", 4.34, -14.84~~" N/A				
CC3: 6.604", -4.35", -14.84"	6.622"	-4.359"	-14.875"	
CY2: 0.00", 8.64", -14.84"	.000"	8.641"	-14.875"	
EX: 6.441", -6.44", -11.69"	6.450"	-6.447"	-11.700"	
E2: -6.546", -5.51", -11.69"	-6.550"	-5.530"	-11.685"	
MBX1: 0.00, -1.72", -3.78"	.000	-1.680"	-3.750"	
MBX2: 3.862", 0.25", -5.46"	3.860"	.258"	-5.485"	
WBX (flange): 0.00", 0.00", 0.00"	.000	.000	.000	
XB:-8.373", -0.10", -13.46"	-8.380"	-.110"	-13.820"	
Dwg 24C352 Sheet 11				
Zone D8; 16.95" +/-.03"	16.948"			
Zone D8; 30.71" +/-.02"	30.603" *			2
Zone D6; 84.715"	84.564" *			3
Zone D3; 16.95" +/-.03"	17.069" *			4
Zone D4: Reference surface L =/-.6 milliradians angular variation with respect to C (.005" over 8")	ok within .005"			
~~Zone B2: 5.20~~" N/A	(ADJUSTABLE HEIGHT)			
Zone B2: 16.0"	15.419" *			5
Zone B8: 9.50"	9.329" *			6
Dwg 24C352 Sheet 7				
Zone A8 33.2" REF	33.124"			
Zone A3 26.9 REF	26.640"			

Meyer Tool & Mfg., Inc.

4601 W. Southwest Hwy., Oak Lawn, Illinois 60453
708/425-9080 Fax 708/425-2612

Inspection Report

Job No.: 00918-0003 OP10
Customer: LBNL
Description: Distribution Box C
MTM Dwg/Item No.: 24C352

Inspected By: DJC
Date: 08/29/05
MTE and Set up: Romer Arm, Calipers, Scale

Dimension	Results	(3)
Supplemental Sketch		
2.81" REF	2.817"	
2.81" REF	2.820"	
7.14" REF	6.972"	
1.52" REF	1.617"	
100.35" REF	100.184"	
94.73" REF	94.540"	
16.20" REF	16.093"	
10.57" REF	10.442"	
10.57" REF	10.625"	
16.20" REF	16.189"	
94.73" REF	94.588"	
100.35" REF	100.179"	

Noconformance Disposition: _____

_____

Dispositioned By: _____ Date: _____

Notes: 1. Record value of all out of tolerance/specification dimension/characteristics. Unless required to record actual values, it is sufficient to report dimensions or characteristics within tolerance or specification as OK.
2. Asterisk (*) all nonconformances. 3. Consecutively number all nonconformances.

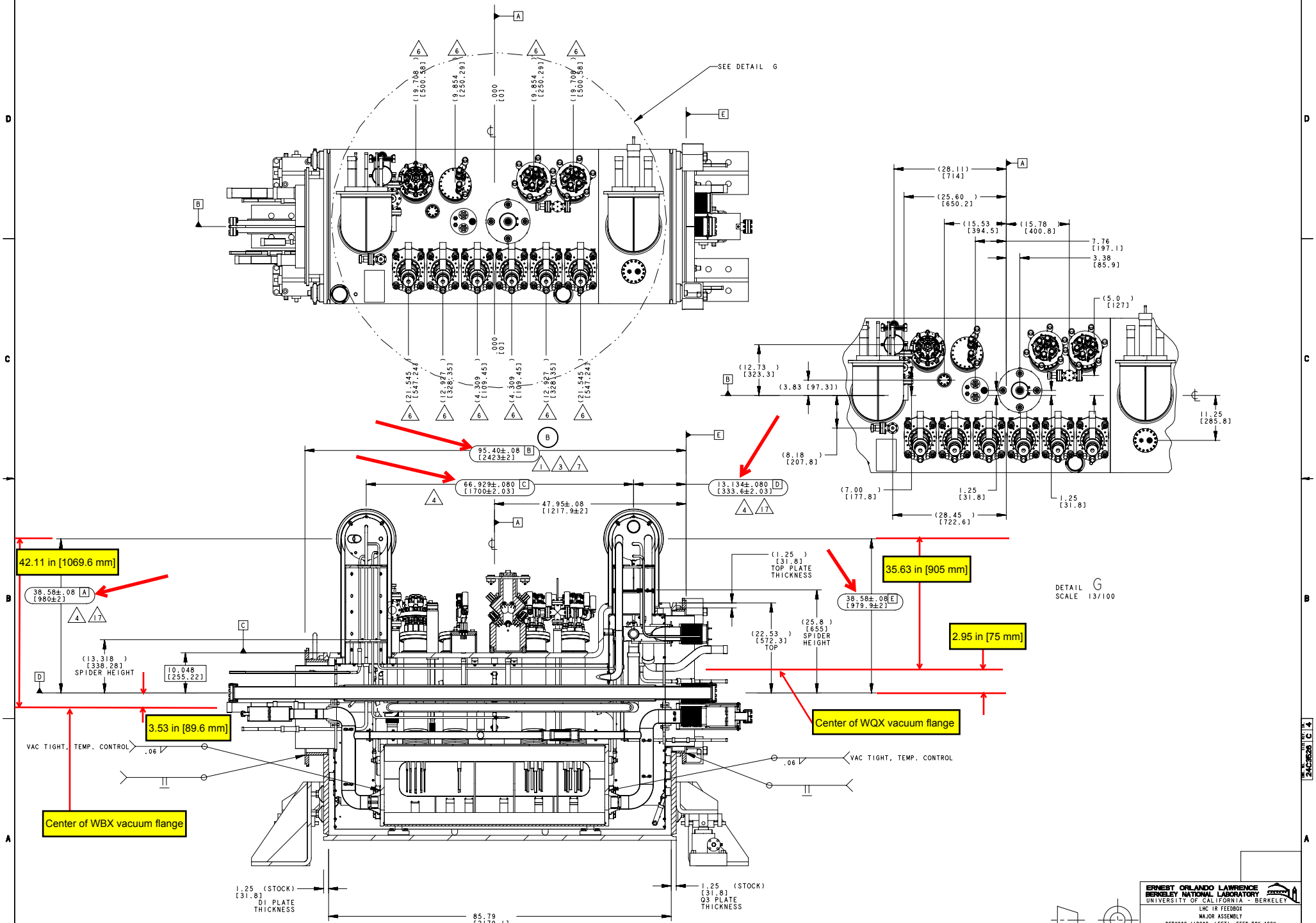
SEE DETAIL G
(19.708) [500.58]
(9.854) [250.29]
.000 [0]
(21.545) [547.24]
(12.927) [328.35]
(4.309) [109.45]
(28.11) [714]
(25.60) [650.2]
(15.53) [394.5]
(15.78) [400.8]
7.76 [197.1]
3.38 [85.9]
(5.0) [127]
(12.73) [323.3]
(3.83) [97.3]
(8.18) [207.8]
(7.00) [177.8]
1.25 [31.8]
(28.45) [722.6]
11.25 [285.8]
95.40±.08 [2423±2]
66.929±.080 [1700±2.03]
13.134±.080 [333.6±2.03]
47.95±.08 [1217.9±2]
42.11 in [1069.6 mm]
38.58±.08 [980±2]
(13.318) [338.28] SPIDER HEIGHT
10.048 [255.22]
3.53 in [89.6 mm]
Center of WBX vacuum flange
VAC TIGHT, TEMP. CONTROL
.06
(1.25) [31.8] TOP PLATE THICKNESS
35.63 in [905 mm]
38.58±.08 [979.9±2]
(22.53) [572.3] TOP
(25.8) [655] SPIDER HEIGHT
2.95 in [75 mm]
Center of WQX vacuum flange
DETAIL G
SCALE 13/100
1.25 (STOCK) [31.8] D1 PLATE THICKNESS
1.25 (STOCK) [31.8] Q3 PLATE THICKNESS
85.79 [2179.1] INSIDE BOX LENGTH
SECTION D-D
SCALE 13/100
THIRD ANGLE PROJECTION
ERNEST ORLANDO LAWRENCE BERKELEY NATIONAL LABORATORY
UNIVERSITY OF CALIFORNIA - BERKELEY
LHC IR FEEDBOX
MAJOR ASSEMBLY
DFBXCAG (IP2&8, LEFT) FEED BOX ASSY
ASSEM
Z5LCE2
LH2001
SCALE: 13/100
SHEET 4 OF 11
24C3526
C

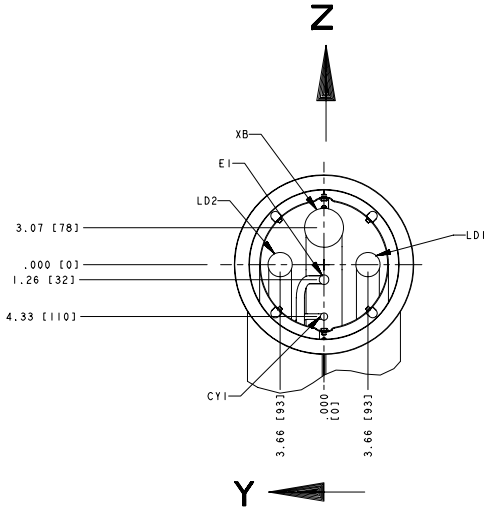

		DIM'S MEASURED FROM FLANGE CENTER	
PIPE	X	Y ±0.08	Z ±0.08
XB	-11.85±.08 [301±2]	0	3.07 [78]
LD2	-11.85±.08 [301±2]	3.66 [93]	0
LD1	-11.85±.08 [301±2]	-3.66 [93]	0
E1	-14.45±.08 [367±2]	0	-1.26 [32]
CY1	-14.45±.08 [367±2]	0	-4.33 [110]

4

DETAIL C
JC1 / QQSC
DIMENSIONAL TOLERANCE ± 0.08
ORIENTATION OPPOSITE OF SPECIFICATION 240
SCALE 1/4

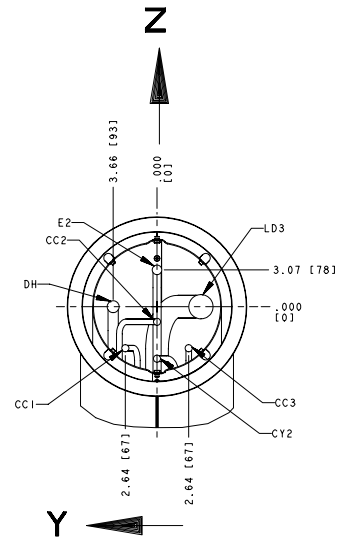

		DIM'S MEASURED FROM FLANGE CENTER	
PIPE	X	Y ±0.08	Z ±0.08
E2	-14.45±.08 [367±2]	0	3.07 [78]
DH	-14.45±.08 [367±2]	3.66 [93]	0
LD3	-11.85±.08 [301±2]	-3.66) [93]	0
CC2	-14.45±.08 [367±2]	0	-1.26 [32]
CC1	-14.45±.08 [367±2]	2.64 [67]	-3.46 [88]
CC3	-14.45±.08 [367±2]	-2.64 [67]	-3.46 [88]
CY2	-14.45±.08 [367±2]	0	-4.33 [110]

4

DETAIL D
JC2 / QQSD
DIMENSIONAL TOLERANCE ± 0.08
ORIENTATION OPPOSITE OF SPECIFICATION 240
SCALE 1/4

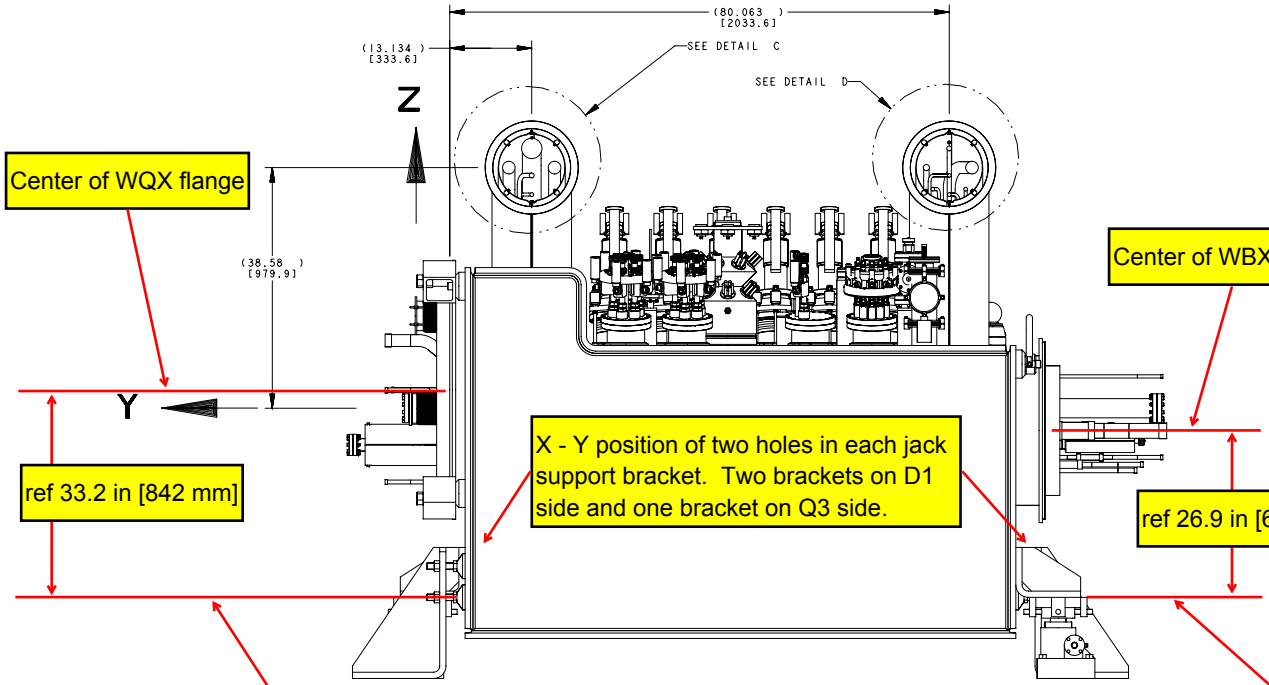

VIEW M - M
ROTATED 180°

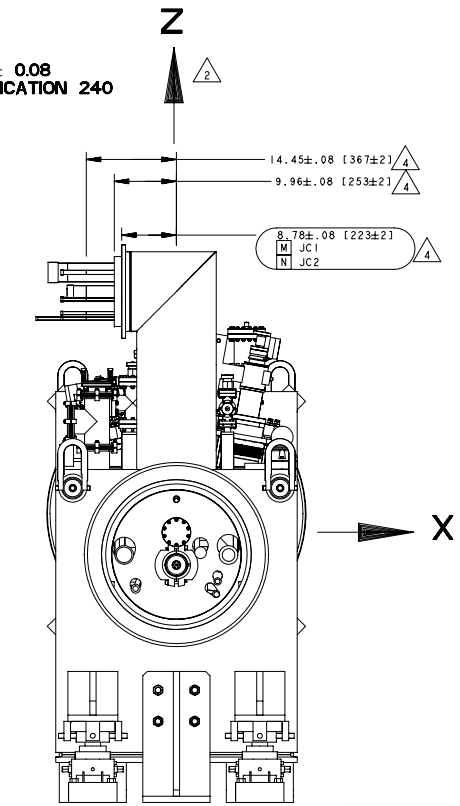

THIRD ANGLE PROJECTION

ERNEST ORLANDO LAWRENCE BERKELEY NATIONAL LABORATORY
UNIVERSITY OF CALIFORNIA - BERKELEY

LHC IR FEEDBOX
MAJOR ASSEMBLY
DFBXC FEED BOX ASSY SKEL

MICROFILMED:	DWG. TYPE	SHOWN ON	SCALE: 3/50	DO NOT SCALE PRINTS
	PART	.	SHEET 7 OF 11	
PATENT CLEAR:	DESIGN ACCT. NO.	CATEGORY CODE	DWG. NO.	SIZE / REV.
	Z5LCE2	LH2001	24C3526	B

DWG. NO. 24C3526 SIZE B REV. 7

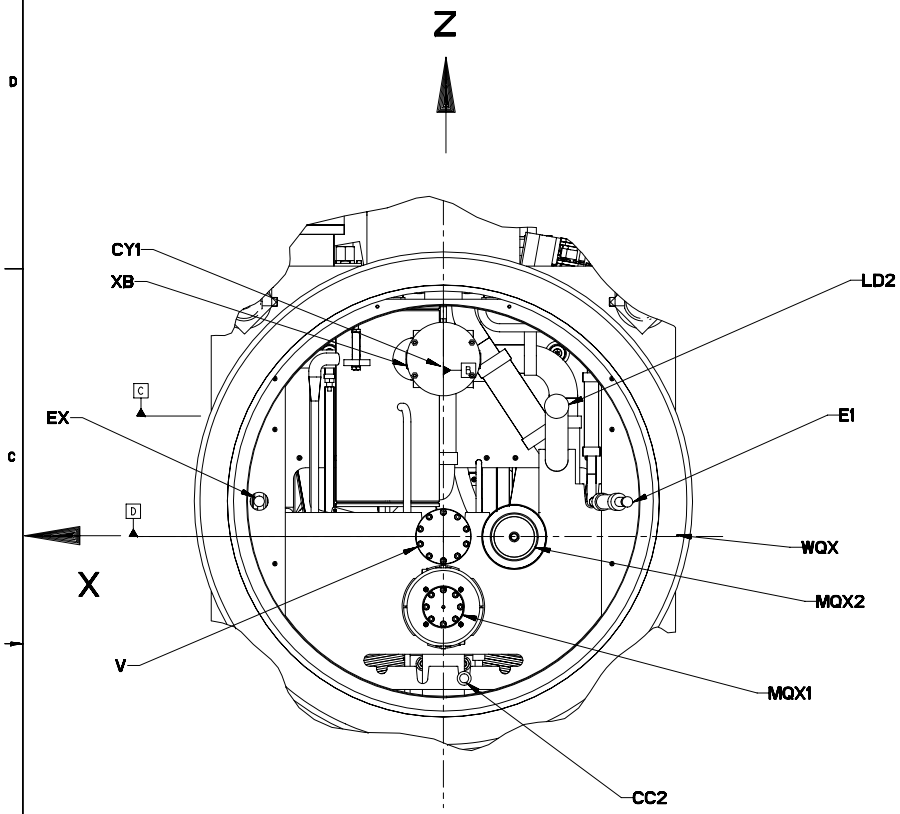

DETAIL E
SCALE 1/4

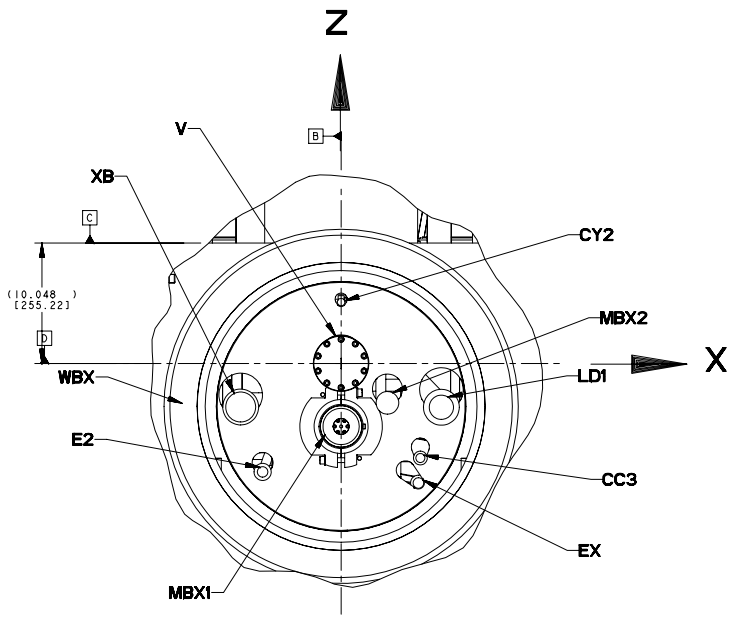

DETAIL F
SCALE 1/4

See next page

See next page

C

Q3 PIPING INTERFACE PER SPEC. LHC-DFBX-ES-210.00 REV 10					
DFBX	PIPE OD/ID		PIPE COORDINATES AT 300 K		
DFBX	OD in [mm]	ID in [mm]	X in [mm] ±.08	Z in [mm] ±.08	Y in [mm] ±.08
V	3.071 [78]	2.913 [73.99]	.000 [0]	.000 [0]	2.032 [51.61]
LD2	1.748 [44.4]	1.650 [41.91]	-9.444 [-239.88]	10.855 [275.72]	6.299 [159.99]
CC3	.626 [15.9]	.528 [13.41]	1.735 [44.07]	-11.822 [-300.28]	6.299 [159.99]
CC2	.626 [15.9]	.528 [13.41]	-1.735 [-44.07]	-11.822 [-300.28]	6.299 [159.99]
CY1	.626 [15.9]	.528 [13.41]	.000 [0]	14.126 [358.8]	3.617 [91.87]
E1	1.500 [38.1]	1.370 [34.8]	-15.345 [-389.76]	2.885 [73.28]	6.299 [159.99]
EX	1.500 [38.1]	1.370 [34.8]	15.355 [390.02]	2.929 [74.4]	6.299 [159.99]
MQX1	3.500 [88.9]	3.370 [85.6]	.000 [0]	-5.871 [-149.12]	6.299 [159.99]
MQX2	3.500 [88.9]	3.370 [85.6]	-5.902 [-149.91]	-.031 [-0.79]	6.299 [159.99]
WQX	41.535 [1055]	35.039 [890]	.000 [0]	2.953 [75.01]	.000 [0]
XB	3.500 [88.9]	3.370 [85.6]	.000 [0]	14.792 [375.72]	5.118 [130]

C

D1 PIPING INTERFACE PER SPEC. LHC-DFBX-ES-230.00 REV 11					
DFBX	PIPE OD/ID		PIPE COORDINATES AT 300 K		
DFBX	OD in [mm]	ID in [mm]	X in [mm] ±.08	Z in [mm] ±.08	Y in [mm] ±.08
V	3.06 [77.7]	2.91 [73.9]	.000 [0]	.000 [0]	-13.504 [-343]
LD1	1.75 [44.5]	1.66 [42.2]	8.359 [212.32]	-3.650 [-92.71]	-13.465 [-342.01]
CC2 END TRANSITION	.63 [16] .50 [12.7]	.53 [13.5] .41 [10.4]	5.429 [137.9]	.811 [20.6]	-14.843 [-377.01]
CC3	.63 [16]	.53 [13.5]	6.604 [167.74]	-7.879 [-200.13]	-14.843 [-377.01]
CY2 END TRANSITION	.63 [16] .50 [12.7]	.53 [13.5] .41 [10.4]	.000 [0]	5.114 [129.9]	-14.843 [-377.01]
Ex	1.50 [38.1]	1.38 [35.1]	6.441 [163.6]	-9.963 [-253.06]	-11.693 [-297]
E2	1.50 [38.1]	1.38 [35.1]	-6.546 [-166.27]	-9.036 [-229.51]	-11.693 [-297]
MBX1	3.50 [88.9]	3.38 [85.9]	.000 [0]	-5.249 [-133.32]	-3.780 [-96.01]
MBX2 END TRANSITION	.50 [12.7] 1.47 [37.3]	.38 [9.7] 1.34 [34]	3.862 [98.09]	-3.279 [-83.29]	-5.465 [-138.81]
WBX	29.53 [750.1]	23.50 [596.9]	.000 [0]	-3.528 [-89.61]	.000 [0]
XB END TRANSITION	2.88 [73.2] 2.00 [50.8]	2.72 [69.1] 1.88 [47.8]	-8.373 [-212.67]	-3.626 [-92.1]	-13.465 [-342.01]

15

THIRD ANGLE PROJECTION

ERNEST ORLANDO LAWRENCE BERKELEY NATIONAL LABORATORY
UNIVERSITY OF CALIFORNIA - BERKELEY

LHC IR FEEDBOX
MAJOR ASSEMBLY
DFBXC FEED BOX ASSY SKEL

MICROFILMED:	DWG. TYPE PART	SHOWN ON -	SCALE: 3/50	DO NOT SCALE PRINTS
PATENT CLEAR:	DESIGN ACCT. NO. Z5LCE2	CATEGORY CODE LH2001	SHEET 6 OF 11 DWG. NO. 24C3526	SIZE B REV. B

DWG. NO. 24C3526 SIZE B REV. B

Q3 Piping Dimensional Inspection - DFBXG Pipe Coordinates at 300 K			
DFBX	**X in / mm ±0.08 in**	**Z in / mm ±0.08 in**	**Y in / mm ±0.08 in**
V	0.00 0.0	-2.95 -75.0	2.03 51.6
LD2	-9.44 -239.9	7.90 200.7	6.30 160.0
CC3	1.74 44.1	-14.77 -375.3	6.30 160.0
CC2	-1.74 -44.1	-14.77 -375.3	6.30 160.0
CY1	0.00 0.0	11.17 283.8	3.62 91.9
E1	-15.34 -389.8	-0.07 -1.7	6.30 160.0
EX	15.36 390.0	-0.02 -0.6	6.30 160.0
MQX1	0.00 0.0	-8.82 -224.1	6.30 160.0
MQX2	-5.90 -149.9	-2.98 -75.8	6.30 160.0
WQX	0.00 0.0	0.00 0.0	0.00 0.0
XB	0.00 0.0	11.84 300.7	5.12 130.0

D1 Piping Dimensional Inspection - DFBXG Pipe Coordinates at 300 K			
DFBX	**X in / mm ±0.08 in**	**Z in / mm ±0.08 in**	**Y in / mm ±0.08 in**
V	0.00 0.0	3.53 89.6	-13.50 -343.0
LD1	8.36 212.3	-0.12 -3.1	-13.46 -342.0
CC2	5.43 137.9	4.34 110.2	-14.84 -377.0
CC3	6.60 167.7	-4.35 -110.5	-14.84 -377.0
CY2	0.00 0.0	8.64 219.5	-14.84 -377.0
EX	6.44 163.6	6.44 163.5	-11.69 -297.0
E2	-6.55 -166.3	-5.51 -139.9	-11.69 -297.0
MBX1	0.00 0.0	-1.72 -43.7	-3.78 -96.0
MBX2	3.86 98.1	0.25 6.3	-5.46 -138.8
WBX	0.00 0.0	0.00 0.0	0.00 0.0
XB	-8.37 -212.7	-0.10 -2.5	-13.46 -342.0

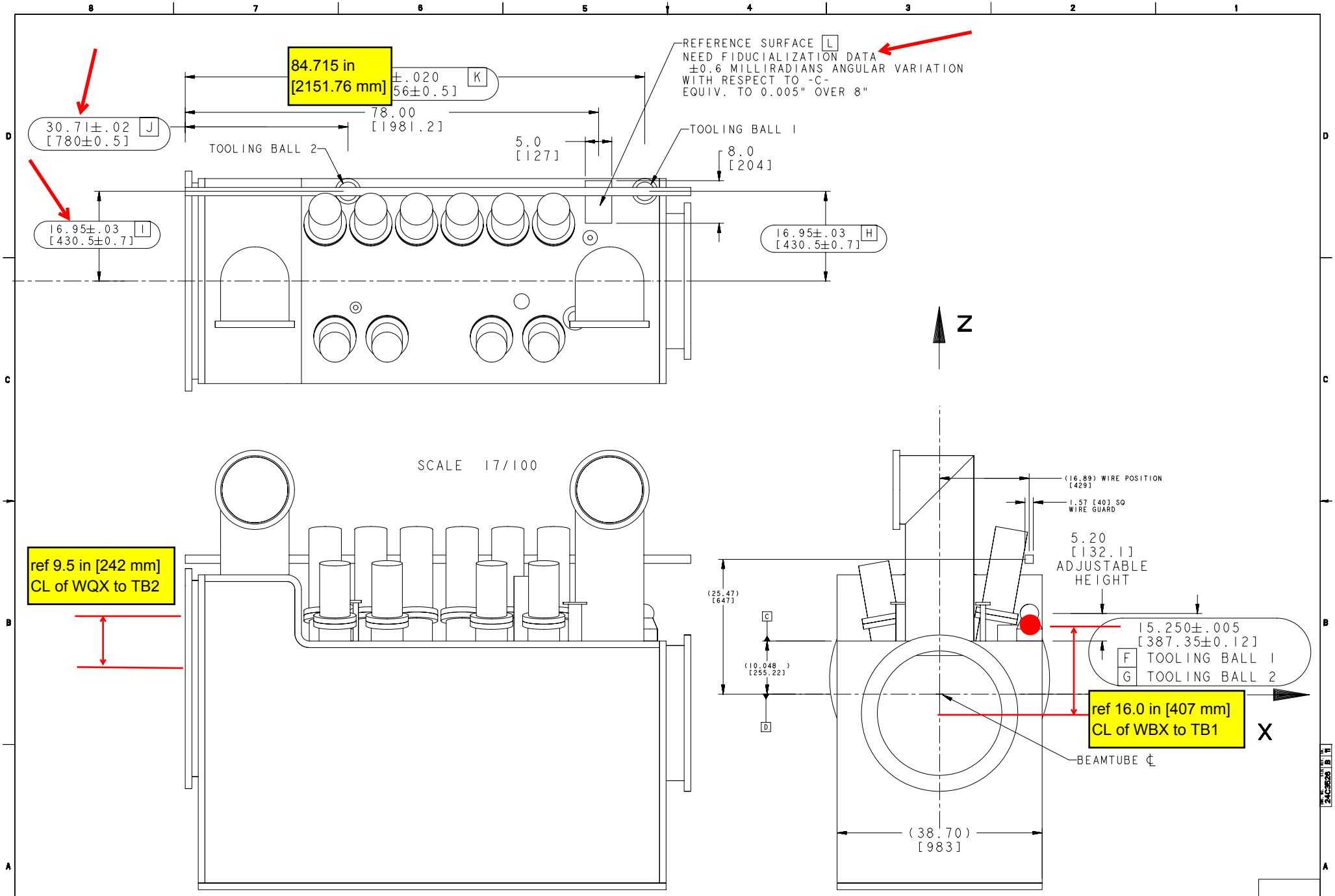

FIDUCIAL LAYOUT INFORMATION

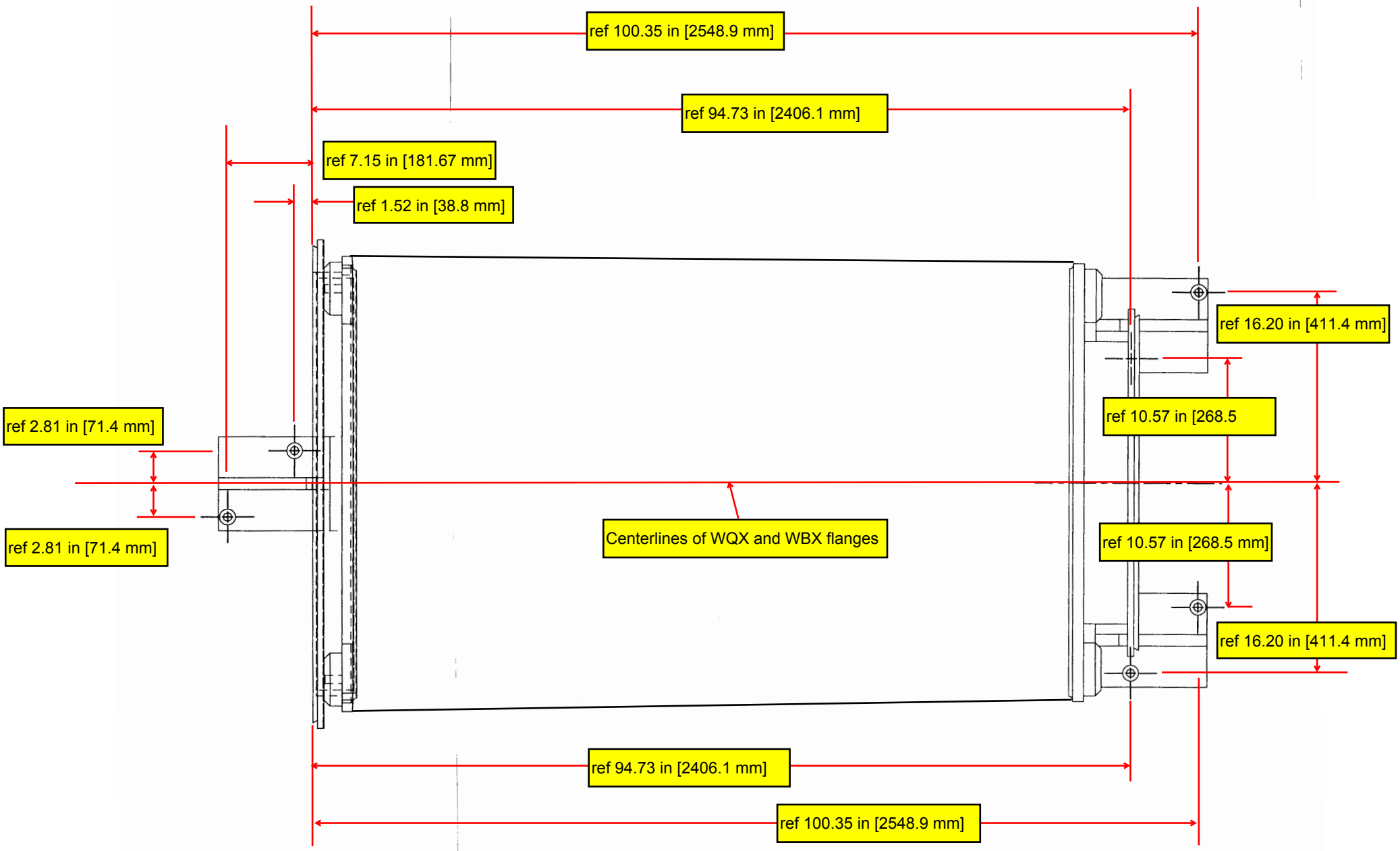
ref 100.35 in [2548.9 mm]
ref 94.73 in [2406.1 mm]
ref 7.15 in [181.67 mm]
ref 1.52 in [38.8 mm]
ref 16.20 in [411.4 mm]
ref 10.57 in [268.5
ref 2.81 in [71.4 mm]
ref 2.81 in [71.4 mm]
Centerlines of WQX and WBX flanges
ref 10.57 in [268.5 mm]
ref 16.20 in [411.4 mm]
ref 94.73 in [2406.1 mm]
ref 100.35 in [2548.9 mm]