Final Dimensional Inspection

Meyer Tool & Mfg., Inc.

4601 W. Southwest Hwy., Oak Lawn, Illinois 60453
708/425-9080 Fax 708/425-2612

Inspection Report

Job No.: 00918-0007 OP10
Customer: LBNL
Description: Distribution Box D
MTM Dwg/Item No.: 24C362

Inspected By: DJC
Date: 01-12-2004
MTE and Set up: Romer Arm, Calipers, Scale

Dimension	**Results**	**(3)**
Dwg 24C362 Sheet 4		
Zone B8: 35.63" +/-.08"	35.555"	
Zone B8: 2.95" +/-.08"	2.946"	
Zone C6: 95.40" +/-.08"	95.356"	
Zone C6: 66.929" +/-.08"	66.912"	
Zone C4: 13.134" +/-.08"	13.349" * (.215" off nom., .135" out of tol.)	1.
Zone B3: 42.11" +/-.08"	42.037"	
Zone B3: 3.53" +/-.08"	3.477"	
Dwg 24C362 Sheet 7		
8.78"+/-.08" (JC1)	8.594" * (.186" of nom., .106" out of tol.)	2.
8.78"+/-.08" (JC2)		
JC1 Pipe Locations X+/-.08", Y+/-.08", Z+/-.08"		
XB: -14.45", 0.00", 3.07"	OK/0.166"* (.166" of nom., .086" out of tol.) /3.145"	3.
LD2: -14.45", 3.66", 0.00"	OK/ 3.625" / .080"	
LD1: -14.45", -3.66", 0.00"	OK/ -3.720" / .000"	
E1: -14.45", 0.00", -1.26"	OK/ .000" / -1.25"	
CY1: -14.45", 0.00", -4.33"	OK/ .000" / -4.375"	
JC2 Pipe Locations X+/-.08", Y+/-.08", Z+/-.08"		
E2: -14.45", 0.00", 3.07"	OK/ .000" /3.062"	
DH: -14.45", -3.66", 0.00"	OK/ -3.625" / .000"	
LD3: -14.45", 3.66", 0.00"	OK/ 3.660" / .000"	
CC2: -14.45", 0.00", -1.26"	OK/ .000" / -1.250"	
CC1: -14.45", -2.64", -3.46"	OK/ -2.625" / -3.500"	
CC3: -14.45", 2.64", -3.46"	OK/ 2.640" / -3.460"	
CY2: -14.45", 0.00", -4.33"	OK/ .000" / -4.375"	
Dwg 24C362 Sheet 8 (supplemental sheet)		
Q3 Pipe Locations X+/-.08", Z+/-.08", Y+/-.08"		
V: 0.00", -2.95", 2.03"	0.129" *(.129" off nom., .049" out of tol.)/-2.946"/OK (This can actually be shimmed into position.)	4.
LD1: -9.44", 7.90", 6.30"	-9.44"/ 7.918" / OK	
CC2: 1.74", -14.77", 6.3"	1.750" / -14.783" / OK	
CY1: 0.00", 11.79", -3.62"	.000" / 11.805" / OK	

Meyer Tool & Mfg., Inc.

4601 W. Southwest Hwy., Oak Lawn, Illinois 60453
708/425-9080 Fax 708/425-2612

Inspection Report

Job No.: 00918-0007 OP10
Customer: LBNL
Description: Distribution Box D
MTM Dwg/Item No.: 24C362

Inspected By: DJC
Date: 01-12-2004
MTE and Set up: Romer Arm, Calipers, Scale

Dimension	**Results**	**(3)**
E1: 15.34", -0.07", -6.30"	15.350" / -.085"/ OK	
EX: -15.36", -0.20", -6.30"	-15.360" / -.190" / OK	
MQX1: 0.00", -8.82", -6.30"	.090" * (.090" off nom., .01" out of tol.) / -8.978" * (.158" off nom., .078" out of tol.) / OK (Note with squirm can loosened MQX1 can be moved into position.)	5.
MQX2: 5.90", -2.98", -6.30"	5.881" / -3.352" (note this with the squirm can tacked to the squirm can on the MQX1 for shipping. If the squirm can is cut free the MQX2 line can be freely moved into position.) / OK	
WQX (flange): 0.00", 0.00", 0.00"	.000" / .000" /.000"	
XB: -9.42", 7.92", -5.12"	-9.420" / 7.910" / OK	
D1 Pipe Locations X+/-.08", Z+/-.08", Y+/-.08"		
V: 0.00", 3.53", 13.50"	.136" * (.136" off nom., .056" out of tol.) / 3.477" / OK (This can actually be shimmed into position.)	6.
LD2: -8.36", -0.12", 13.46"	-8.360" / -.125" / OK	
CC3: -6.60", -4.35", 14.84"	-6.25" / -4.375" / OK	
CY2: 5.90", 7.62", 14.84"	-5.875" / 7.620" / OK	
EX: -6.44", -6.44", 11.69"	-6.440" / -6.440" / OK	
E2: 6.55", -5.51", 11.69"	6.500" / -5.510" / OK	
MBX1: 0.00, -1.72", 3.78"	.228" * (.228" off nom., .148" out of tol.)/ –1.658" / OK (Measured near cut line on pipe, there is some movement possible, but this is free state.)	7.
MBX2: -3.86", 0.25", 5.46"	-3.860" / .250" / OK	
WBX (flange): 0.00", 0.00", 0.00"	.000" / .000" /.000"	
XB:-4.90", -3.29", 13.46"	-4.900" / 3.250" / OK	
Dwg 24C362 Sheet 11		
Zone D8; 16.95" +/-.03"	16.893" * (.057" of nom., .027" out of tol.)	8.
Zone D8; 30.71" +/-.02"	30.754" * (.044" of nom., .024" out of tol.)	9.
Zone D6; 84.715" +/-.02"	84.754"	
Zone D3; 16.95" +/-.03"	16.946"	
Zone D4: Reference surface L =/-.6 milliradians angular variation with respect to C (.005" over 8")	OK within .005"	
Zone B8: 9.50"	9.344" REF	

Meyer Tool & Mfg., Inc.

4601 W. Southwest Hwy., Oak Lawn, Illinois 60453
708/425-9080 Fax 708/425-2612

Inspection Report

Job No.: 00918-0007 OP10
Customer: LBNL
Description: Distribution Box D
MTM Dwg/Item No.: 24C362

Inspected By: DJC
Date: 01-12-2004
MTE and Set up: Romer Arm, Calipers, Scale

Dimension	Results	(3)
Zone B2: 16.00"	15.887" REF	

Noconformance Disposition: _____

_____

Dispositioned By: _____ Date: _____

Notes: 1. Record value of all out of tolerance/specification dimension/characteristics. Unless required to record actual values, it is sufficient to report dimensions or characteristics within tolerance or specification as OK.
2. Asterisk (*) all nonconformances. 3. Consecutively number all nonconformances.

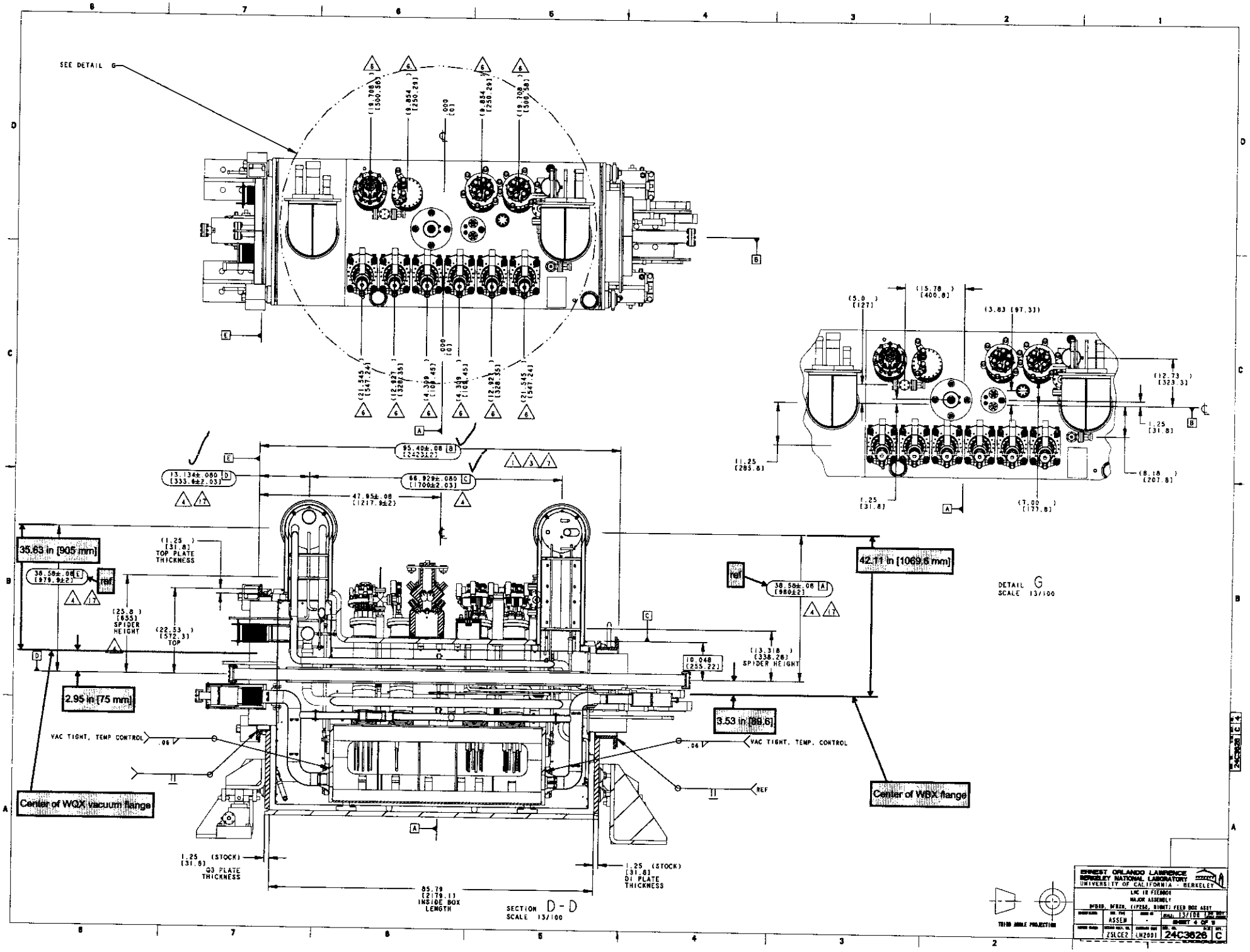
SEE DETAIL G
(19.708) [500.58]
(9.854) [250.29]
.000 [0]
(21.545) [547.24]
(12.927) [328.35]
(4.309) [109.45]
95.40±.08 [2423±2]
13.134±.080 [333.6±2.03]
66.929±.080 [1700±2.03]
47.95±.08 [1217.9±2]
35.63 in [905 mm]
38.58±.08 [979.9±2]
ref
(1.25) [31.8] TOP PLATE THICKNESS
(25.8) [655] SPIDER HEIGHT
(22.53) [572.3] TOP
2.95 in [75 mm]
VAC TIGHT, TEMP CONTROL
Center of WQX vacuum flange
1.25 (STOCK) [31.8] Q3 PLATE THICKNESS
85.79 [2179.1] INSIDE BOX LENGTH
1.25 (STOCK) [31.8] D1 PLATE THICKNESS
SECTION D - D
SCALE 13/100
42.11 in [1069.6 mm]
38.58±.08 [980±2]
10.048 [255.22]
(13.318) [338.28] SPIDER HEIGHT
3.53 in [89.6]
VAC TIGHT, TEMP. CONTROL
REF
Center of WBX flange
(5.0) [127]
(15.78) [400.8]
(3.83 [97.3])
(12.73) [323.3]
1.25 [31.8]
(11.25 [285.8]
(8.18) [207.8]
(7.00) [177.8]
DETAIL G
SCALE 13/100
THIRD ANGLE PROJECTION
ERNEST ORLANDO LAWRENCE
BERKELEY NATIONAL LABORATORY
UNIVERSITY OF CALIFORNIA - BERKELEY
LHC IR FEEDBOX
MAJOR ASSEMBLY
DFBXB, DFBXN, (IP2SB, RIGHT) FEED BOX ASSY
ASSEM
13/100
SHEET 4 OF 9
25LCE2
LH2001
24C3626
C

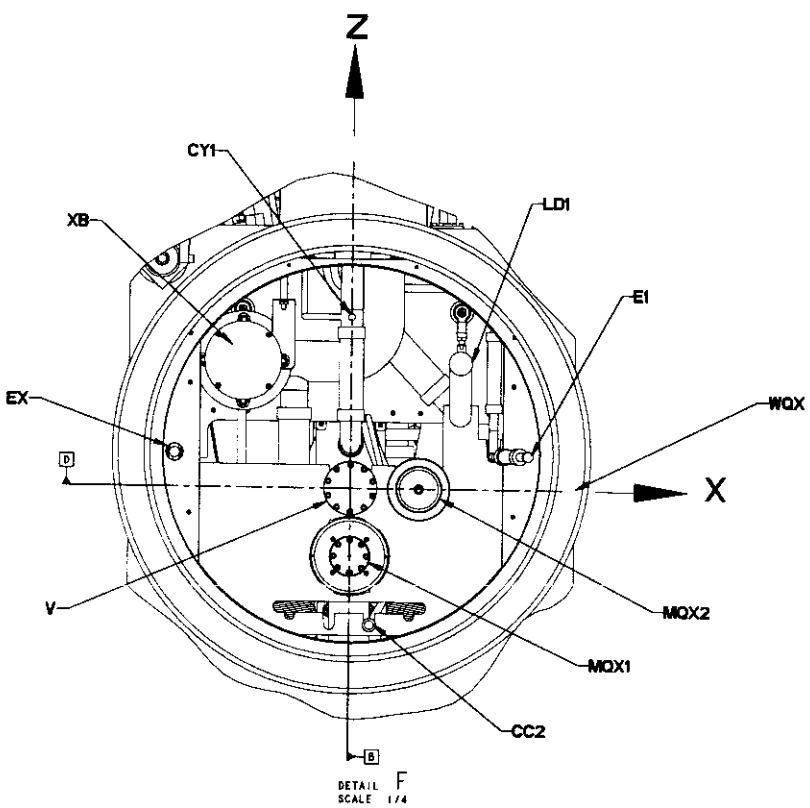

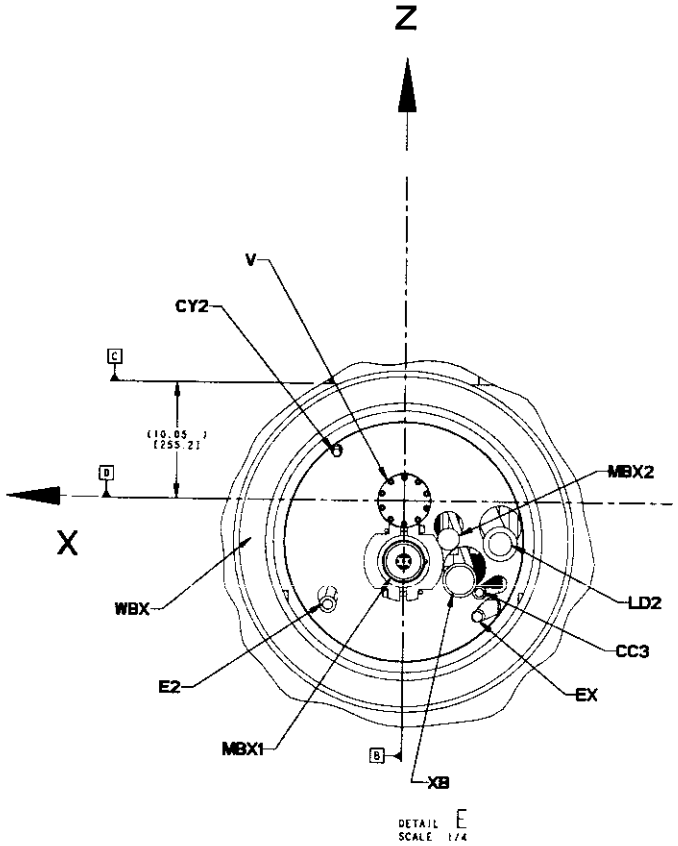

See next page

Seen next page

C3 PIPING INTERFACE
PER SPEC. LHC-DFBX-ES-230.00 REV 10

DFBX	PIPE OD/ID OD in [mm]	PIPE OD/ID ID in [mm]	PIPE COORDINATES AT 300 K X in [mm] ±.06	Z in [mm] ±.06	Y in [mm] ±.06
V	3.071 [78]	2.913 [73.9]	.000 [0]	.000 [0]	-2.032 [-51.61]
LD1	1.748 [44.4]	1.650 [41.9]	9.444 [239.88]	10.855 [275.72]	-4.289 [-159.99]
CC2	.626 [15.9]	.526 [13.4]	8.735 [44.07]	-11.822 [-300.28]	-6.299 [-159.99]
CY1	.626 [15.9]	.526 [13.4]	.000 [0]	14.742 [374.45]	-3.617 [-91.87]
E1	1.500 [38.1]	1.370 [34.8]	15.345 [389.76]	2.885 [73.26]	-6.299 [-159.99]
EX	1.500 [38.1]	1.370 [34.8]	-15.355 [-390.02]	2.929 [74.4]	-6.299 [-159.99]
MQX1	3.500 [88.9]	3.370 [85.6]	.000 [0]	-5.871 [-149.12]	-6.299 [-159.99]
MQX2	3.500 [88.9]	3.370 [85.6]	5.902 [149.9]	-.031 [-0.79]	-6.299 [-159.99]
WQX	41.535 [1055]	35.039 [890]	.000 [0]	2.953 [75.01]	.000 [0]
XB	3.500 [88.9]	3.370 [85.6]	-9.420 [-239.27]	10.876 [276.25]	-5.118 [-130]

D1 PIPING INTERFACE
PER SPEC. LHC-DFBX-ES-230.00 REV 11

DFBX	PIPE OD/ID OD in [mm]	PIPE OD/ID ID in [mm]	PIPE COORDINATES AT 300 K X in [mm] ±.06	Z in [mm] ±.06	Y in [mm] ±.06
V	3.06 [77.7]	2.91 [73.9]	.000 [0]	.000 [0]	13.504 [343]
LD2	1.75 [44.5]	1.66 [42.2]	-8.359 [-212.32]	-3.650 [-92.71]	13.465 [342.01]
CC3	.63 [16]	.53 [13.5]	-6.604 [-167.74]	-7.679 [-290.13]	14.843 [377.01]
CY2 OR TRANSITION	.63 [16] .50 [12.7]	.53 [13.5] .41 [10.4]	5.901 [149.89]	4.091 [103.91]	14.843 [377.01]
EX	1.50 [38.1]	1.38 [35.1]	-6.441 [-163.6]	-9.963 [-253.06]	11.693 [297]
E2	1.50 [38.1]	1.38 [35.1]	6.546 [166.27]	-9.036 [-229.5]	11.693 [297]
MBX1	3.50 [88.9]	3.38 [85.9]	.000 [0]	-5.249 [-133.32]	3.780 [96.01]
MBX2 OR TRANSITION	.50 [12.7] 1.47 [37.3]	.38 [9.7] 1.34 [34]	-3.862 [-98.09]	-3.279 [-83.28]	5.465 [138.81]
WBX	29.53 [750.1]	23.50 [596.9]	.000 [0]	-3.528 [-89.61]	.000 [0]
XB OR TRANSITION	2.88 [73.2] 2.00 [50.8]	2.72 [69.1] 1.88 [47.8]	-4.898 [-124.36]	-6.819 [-173.2]	13.465 [342.01]

15

THIRD ANGLE PROJECTION

ERNEST ORLANDO LAWRENCE BERKELEY NATIONAL LABORATORY
UNIVERSITY OF CALIFORNIA - BERKELEY

LHC IR FEEDBOX
MAJOR ASSEMBLY
DFBXD, DFBXR, (1F2AR, RIGHT) FEED BOX ASSY

DRAWN BY	ASSEN	SCALE: 1:7/100	SHEET 8 OF 8
DRAWING NO.	Z5LCE2	DRAWING NO. LH2001	24C3626 C

24C3626 C 8

Q3 Piping Dimensional Inspection - DFBXD Pipe Coordinates at 300 K			
DFBX	X in / mm ±0.08 in	Z in / mm ±0.08 in	Y in / mm ±0.08 in
V	0.00 0.0	-2.95 -75.0	2.03 51.6
LD1	-9.44 -239.9	7.90 200.7	6.30 160.0
CC2	1.74 44.1	-14.77 -375.3	6.30 160.0
CY1	0.00 0.0	11.79 299.5	-3.62 -91.9
E1	15.34 389.8	-0.07 -1.7	-6.30 -160.0
EX	-15.36 -390.0	-0.02 -0.6	-6.30 -160.0
MQX1	0.00 0.0	-8.82 -224.1	-6.30 -160.0
MQX2	5.90 149.9	-2.98 -75.8	-6.30 -160.0
WQX	0.00 0.0	0.00 0.0	0.00 0.0
XB	-9.42 -239.3	7.92 201.3	-5.12 -130.0

D1 Piping Dimensional Inspection - DFBXD Pipe Coordinates at 300 K			
DFBX	X in / mm ±0.08 in	Z in / mm ±0.08 in	Y in / mm ±0.08 in
V	0.00 0.0	3.53 89.6	13.50 343.0
LD2	-8.36 -212.3	-0.12 -3.1	13.46 342.0
CC3	-6.60 -167.7	-4.35 -110.5	14.84 377.0
CY2	5.90 149.9	7.62 193.5	14.84 377.0
EX	-6.44 -163.6	-6.44 -163.5	11.69 297.0
E2	6.55 166.3	-5.51 -139.9	11.69 297.0
MBX1	0.00 0.0	-1.72 -43.7	3.78 96.0
MBX2	-3.86 -98.1	0.25 6.3	5.46 138.8
WBX	0.00 0.0	0.00 0.0	0.00 0.0
XB	-4.90 -124.4	-3.29 -83.6	13.46 342.0

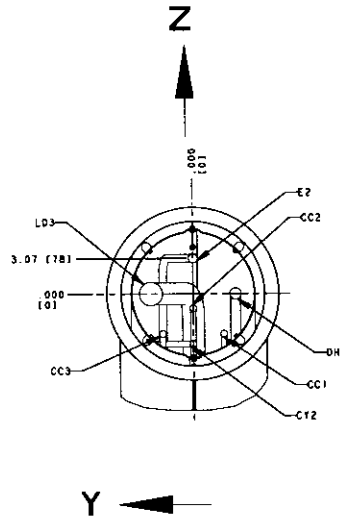

		DIM'S MEASURED FROM FLANGE CENTER	
PIPE	X	Y ±0.08	Z ±0.08
E2	-14.45±.08 [367±2]	0	3.07 [78]
DH	-14.45±.08 [367±2]	-3.66 [93]	0
LD3	-14.45±.08 [367±2]	3.66 [93]	0
CC2	-14.45±.08 [367±2]	0	-1.26 [32]
CC1	-14.45±.08 [367±2]	-2.64 [67]	-3.46 [88]
CC3	-14.45±.08 [367±2]	2.64 [67]	-3.46 [88]
CY2	-14.45±.08 [367±2]	0	-4.33 [110]

4

DETAIL D
JC2 / QQSD
DIMENSIONAL TOLERANCE ± 0.08
ORIENTATION OPPOSITE OF SPECIFICATION 240
SCALE 1/4

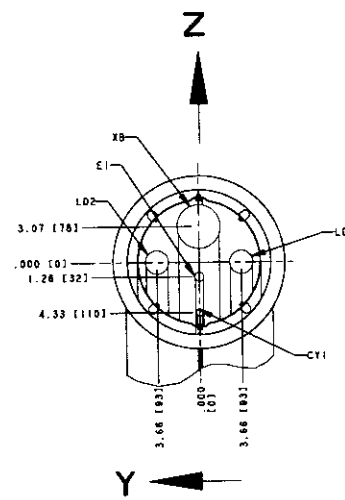

		DIM'S MEASURED FROM FLANGE CENTER	
PIPE	X	Y ±0.08	Z ±0.08
XB	-14.45±.08 [367±2]	0	3.07 [78]
LD2	-14.45±.08 [367±2]	3.66 [93]	0
LD1	-14.45±.08 [367±2]	-3.66 [93]	0
E1	-14.45±.08 [367±2]	0	-1.26 [32]
CY1	-14.45±.08 [367±2]	0	-4.33 [110]

4

DETAIL C
JC1 / QQSC
DIMENSIONAL TOLERANCE ± 0.08
ORIENTATION OPPOSITE OF SPECIFICATION 240
SCALE 1/4

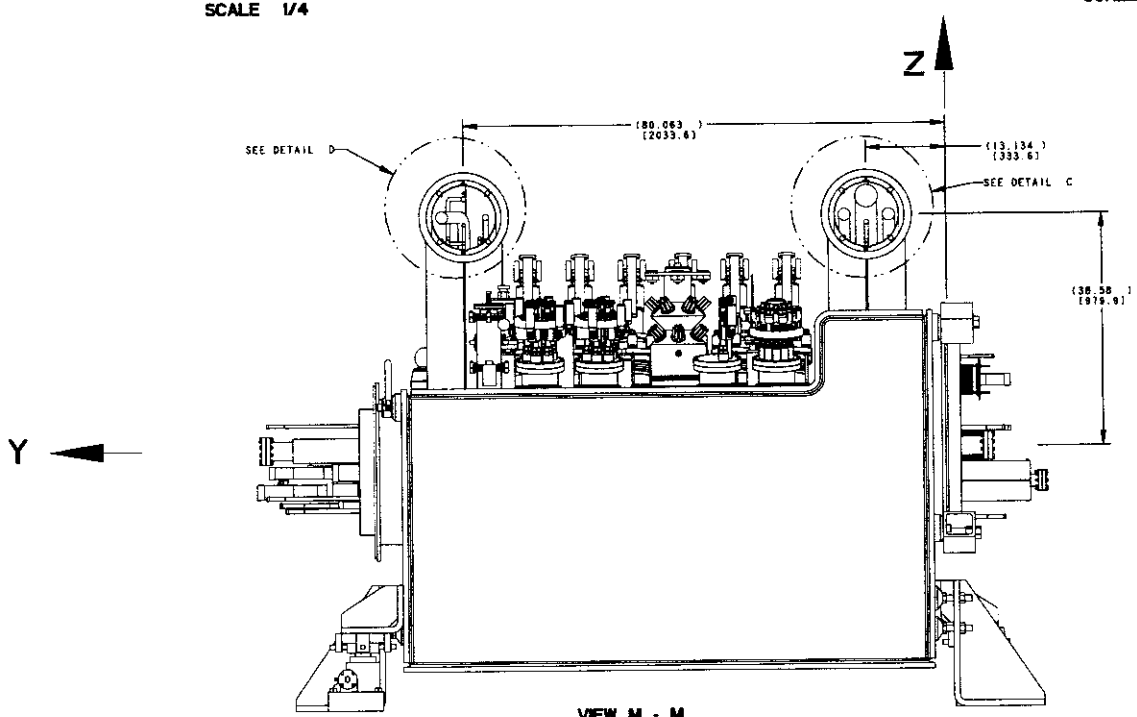

VIEW M - M
ROTATED 180°

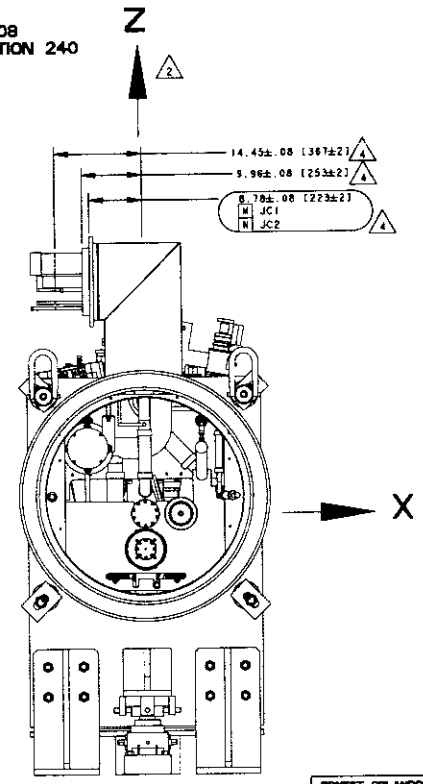

THIRD ANGLE PROJECTION

ERNEST ORLANDO LAWRENCE BERKELEY NATIONAL LABORATORY
UNIVERSITY OF CALIFORNIA - BERKELEY

LUC 18 FEEDBOX
MAJOR ASSEMBLY
OFBXD, OFBXN, (IP2&6, RIGHT) FEED BOX ASSY

ASSEM	-	SCALE: 13/100	SHEET 7 OF 8
Z5LCE2	LH2001	24C3626	C

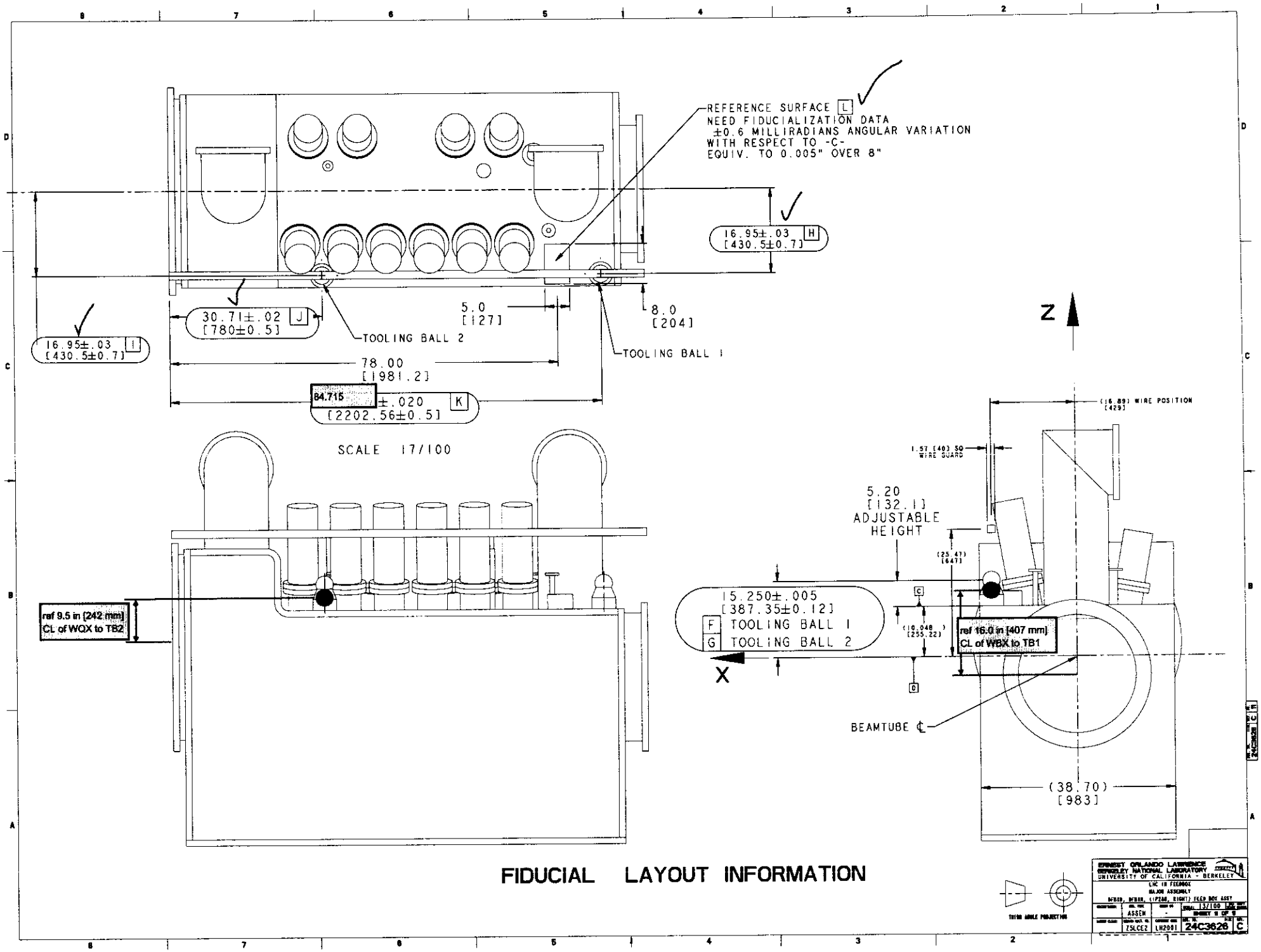

FIDUCIAL LAYOUT INFORMATION