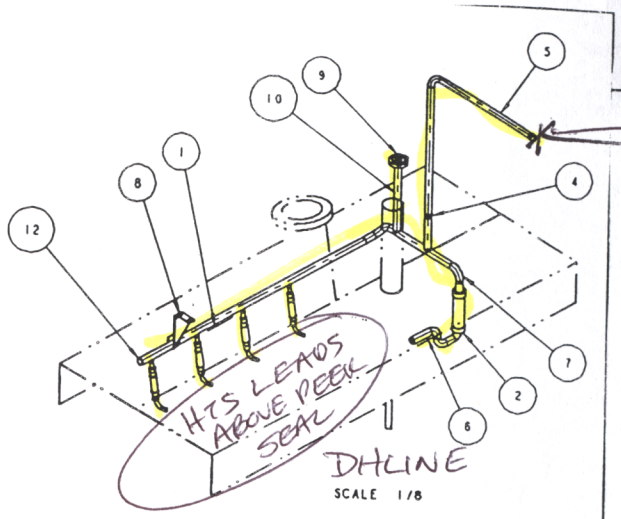

PRESSURIZE FROM JC2 JUMPER

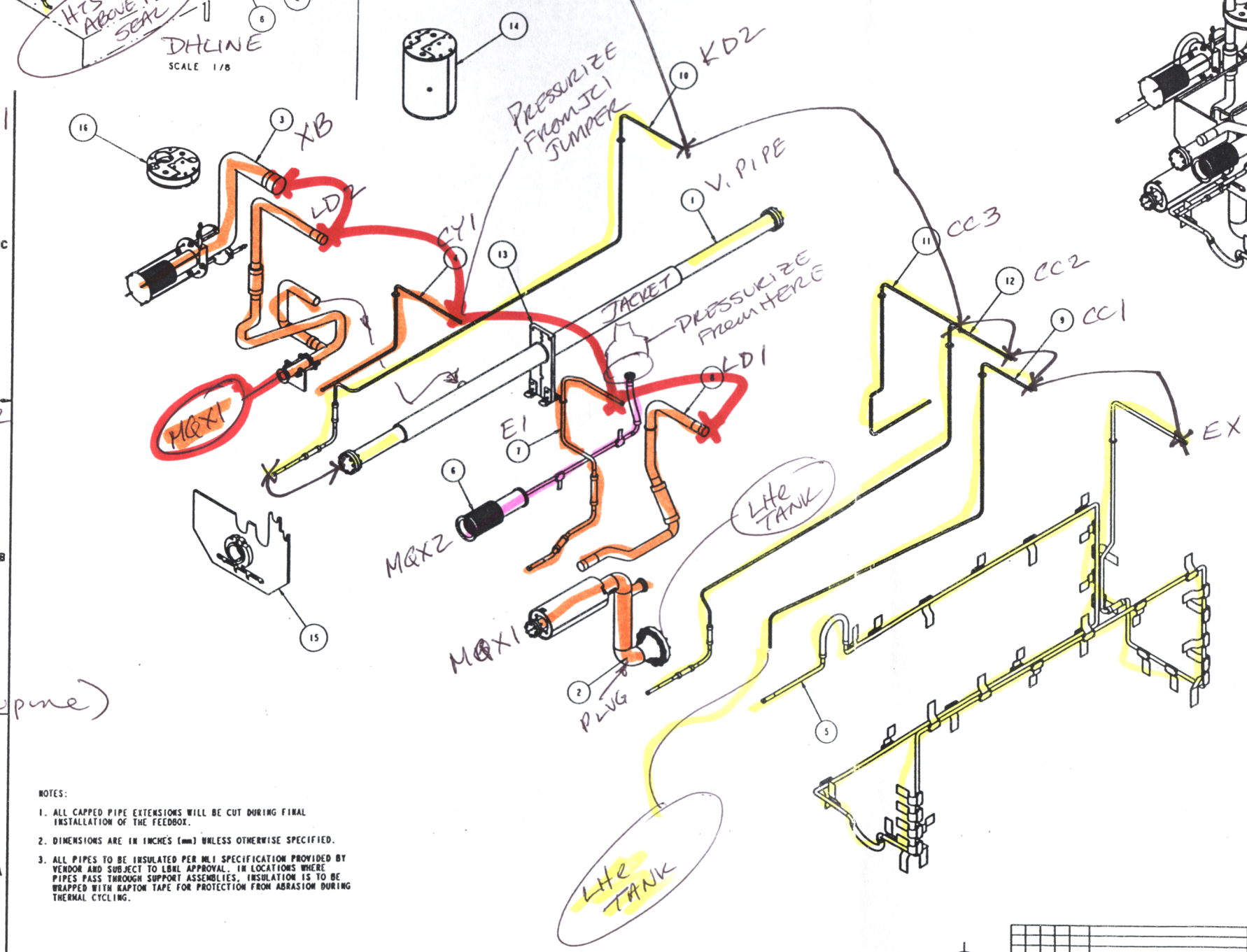

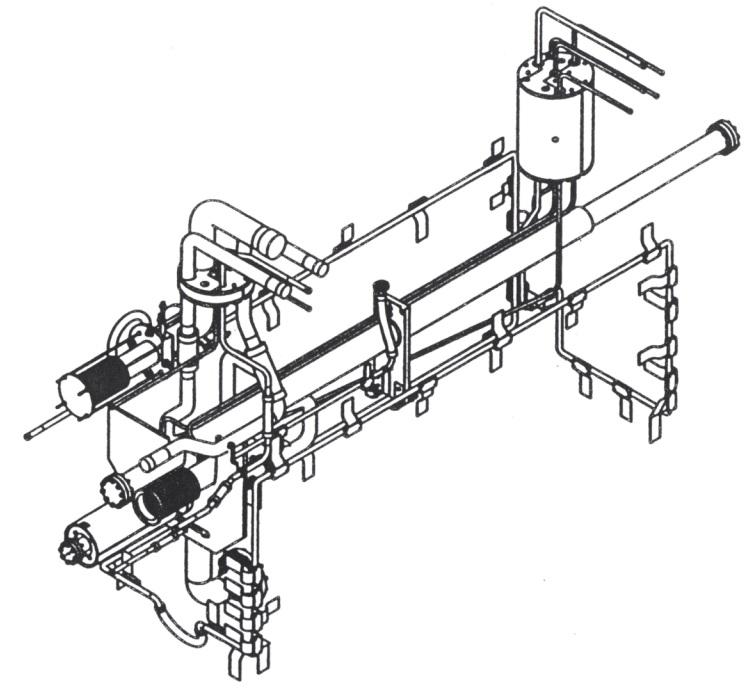

JC2 CIRCUIT #1
DHLINE
KD2
V. PIPE
CC3
CC2
CC1
EX
LHe TANK

JC1 CIRCUIT #2
XB
LD2
CY1
E1
LD1
MQX1

CIRCUIT #3
MQX2 (Porcupine)

E used on 24C394 Item 15 Qty 1

subjob-0013

NOTES:

1. ALL CAPPED PIPE EXTENSIONS WILL BE CUT DURING FINAL INSTALLATION OF THE FEEDBOX.
2. DIMENSIONS ARE IN INCHES [mm] UNLESS OTHERWISE SPECIFIED.
3. ALL PIPES TO BE INSULATED PER MLI SPECIFICATION PROVIDED BY VENDOR AND SUBJECT TO LBNL APPROVAL. IN LOCATIONS WHERE PIPES PASS THROUGH SUPPORT ASSEMBLIES, INSULATION IS TO BE WRAPPED WITH KAPTON TAPE FOR PROTECTION FROM ABRASION DURING THERMAL CYCLING.

ITEM	PART NO	REQD	DESCRIPTION	MATERIAL
16	251095	1	SUPPORT, QUSA, DFBSE	NEMA G10
15	251412	1	SUPPORT, Q3 SIDE, DFBSA / DFBSF	NEMA G10
14	251298	1	SUPPORT, QUSB, DFBSE	NEMA G10
13	251447	1	SUPPORT, CENTER PIPE, DFBSE	-
12	251525	1	PIPE, CC2	-
11	251524	1	PIPE, CC3	-
10	251523	1	PIPE, KD2	-
9	251548	1	PIPE, CC1	-
8	251905	1	PIPE, LD1	-
7	251563	1	PIPE, E1	-
6	251301	1	PIPE, MQX2	-
5	251527	1	PIPE, EX	-
4	251563	1	PIPE, CY1	-
3	251552	1	PIPE WELDMENT, XB	-
2	251557	1	PIPE WELDMENT, LD2 AND DHE DUCT	-
1	251546	1	V PIPE & JACKET ASSEMBLY	-

REV	DWG	CHK	ZONE	DATE	CHANGES
B	ARH	DPO			UPDATED SUBASSEMBLY VIEWS
A	MJK	DPO			INITIAL RELEASE

UNLESS OTHERWISE SPECIFIED
TOLERANCES: X.X ± 0.1 FRAC. ± 1/64; X.XX ± 0.04 Angles ± 1.0°; X.XXX ± 0.010 FINISH 125
DO NOT SCALE PRINT
DRAWN ARE MADE 2
CHAMFER EDGE OF ALL SHARP EDGES 15°
CAE FRAME, 1.5 INCHES ABOVE OR ATTACHED SURFACE
EDGE DIST .062 MIN. OR ATTACHED EDGE
CENTER DRILL, FOLLOW DRAWING & WORK EDGE OF ATTACHMENT EDGE AND MAJOR DIA.

SHOP ORDERS
DWN 05-Apr-02
CHK 11-APR-02
APPR 11-APR-02
MFG 11-APR-02

ERNEST ORLANDO LAWRENCE BERKELEY NATIONAL LABORATORY
UNIVERSITY OF CALIFORNIA - BERKELEY
LHC IR FEEDBOX
CRYOGENICS
PIPING DFBSE IP5, LEFT 24C394
DRAWN BY: ASSEM
SCALE: 0.125
SHEET 1 OF 8
DO NOT SCALE DRAWING
FINISH: 0.060ATZ
FINISH: 0.060ATZ
CAD FILE: Z5LCC2
DRAWING CODE: LH2001
DWG. NO. 2518736
REV. B