FERMILAB Technical Division	7500A HTS Power leads for the LHC DFBX	Doc. No. Rev. No. 1 Date: August 18, 2003 Page 1 of 1 Author: Sandor Feher
	0. Cover Sheet for Check Out Form	

Power leads being tested: 7500 A DFLX 29 7500 A DFLX 31

Task #	Responsible	Task	Received Date,time		Performed Date,time	
1	Inspection	Unpack the leads			3/24/03	1430
2	Inspection	IB4 mech. & Tolerances				
3	Mechanical	Move the leads to MTF				
4	Electrical	Initial electrical check out			4/1/03	1530
4a	Mechanical	Preliminary leak check			10/9/03	
5	Mechanical	Installation of the current leads			10/12/03	
6	Mechanical	Pressure test			10/12/03	
7	Mechanical	Leak check			10/13/03	
7a	Mechanical	Top plate insertion into the dewar			10/13/03	
8	M. Tartaglia	Configuration of the DAQ system				
9	Electrical	Room temp. electrical test			10/13/03	
10	Mechanical	Installation of the top plate			10/13/03	
10.1	Electrical	Room temp. GHe hipot			10/13/03	
12	Mechanical	Cool down			10/14/03	0600
13	Electrical	Electrical & instrumentation test			10/14/03	0900
14	Mechanical	Connect the leads to the Power Supply & configure			10/14/03	1000
15	Electrical	Electrical & instrumentation test				
16	M. Thompson	Cold test of the power lead			10/14/03	1030
17	Mechanical	Perform a Thermal cycle			10/14/03	1530
18	M. Thompson	Cold test of the power lead			10/15/03	0930
19	Mechanical	Warm up			10/15/03	1500
20	Electrical	Electrical & instrumentation test			10/16/03	1530
21	Mechanical	Remove the top plate				
22	Mechanical	Remove the leads from the top plate				
23	Mechanical	Pack and move the leads				

FERMILAB Technical Division	7500A HTS Power leads for the LHC DFBX	Doc. No. Rev. No. Date:January 6, 2003 Page 1 of 1 Author: Sandor Feher
	1. Unpacking Check Out Form	

Performed by SUDHIR GHANTA (name typed) (signature)

Date & time 3/24/03 2:30 pm

Note: Save the shipping container for storing and moving the leads around TD and after the test is complete to ship them to the DFBX manufacturer.

1.1 Container Identification: 7500 A DFLX 29 7500 A DFLX 31
(Leads serial numbers are on one side of the container)

1.2 Note condition of shipping container
No damage ☑ Slight damage ☐ Massive damage ☐

1.3 Examine condition of g-load indicators
a. Each side of the box are Shock Watch-s are installed
Not tripped ☑ Tripped (red) ☐ Remark: _____
Not tripped ☑ Tripped (red) ☐ Remark: _____

b. Each leads have a Shock Watch installed onto their body
Not tripped ☑ Tripped (red) ☐ Remark: _____
Not tripped ☑ Tripped (red) ☐ Remark: _____

c. Each leads have another "10G DROP" devices installed on the flag of the leads
Not tripped ☑ Tripped (Black) ☐ Remark: 29
Not tripped ☐ Tripped (Black) ☑ Remark: 31

1.4 Container content:
a. Power leads: 7500 A DFLX 29 ; 7500 A DFLX 31
b. Travel document for each lead in an envelope ☑
c. In a plastic box:
1. One clamp: Item No. C105-12-401; Description NW16/10 Clamping ring ST/STEEL PK1 ☑
2. One valve made by "precision Cryogenic System" ☑
3. One O-ring seal with brass insert ☑
4. TWO UNIDENTIFIED PARTS IN BOX

PART NAME : 7.5 KA CURRENT LEAD ASSY (LBNL01)
REV NUMBER :
SER NUMBER :
STATS COUNT : 1

7500A OFLx 29

MM	DIM CYL -A-DIA= LOCATION OF CYLINDER CYL -A-					
AX	NOMINAL	+TOL	-TOL	MEAS	DEV	OUTTOL
D	99.000	0.200	0.200	99.081	0.081	0.000

MM	DIM -A-= ROUNDNESS OF CYLINDER CYL -A-					
AX	NOMINAL	+TOL	-TOL	MEAS	DEV	OUTTOL
M	0.000	0.200	0.000	0.070	0.070	0.000

MM	DIM -B-= FLATNESS OF PLANE PLN -B-					
AX	NOMINAL	+TOL	-TOL	MEAS	DEV	OUTTOL
M	0.000	0.050	0.000	0.007	0.007	0.000

MM	DIM PERP1= PERPEND OF PLANE PLN -B- TO CYLINDER CYL -A- EXTEND=0.00(					
AX	NOMINAL	+TOL	-TOL	MEAS	DEV	OUTTOL
M	0.000	0.130	0.000	0.074	0.074	0.000

MM	DIM PERP2= PERPEND OF PLANE LRG FLANGE TO CYLINDER CYL -A- EXTEND=5(					
AX	NOMINAL	+TOL	-TOL	MEAS	DEV	OUTTOL
M	0.000	0.130	0.000	0.350	0.350	0.220

MM	DIM -C- DIA= LOCATION OF CYLINDER -C-					
AX	NOMINAL	+TOL	-TOL	MEAS	DEV	OUTTOL
D	80.000	0.008	0.008	80.010	0.011	0.003

MM	DIM CONCEN2=CONCENTRICITY FROM CYLINDER -C- TO CYLINDER CYL -A-					
AX	NOMINAL	+TOL	-TOL	MEAS	DEV	OUTTOL
M	0.000	0.250	0.000	1.339	1.339	1.089

MM	DIM RND2= ROUNDNESS OF CYLINDER -C-					
AX	NOMINAL	+TOL	-TOL	MEAS	DEV	OUTTOL
M	0.000	0.200	0.000	0.096	0.096	0.000

MM	DIM DIST1= 2D DISTANCE FROM PLANE PLN -B- TO PLANE LRG FLANGE PAR T(					
AX	NOMINAL	+TOL	-TOL	MEAS	DEV	OUTTOL
M	561.000	1.000	1.000	560.986	-0.014	0.000

MM	DIM LOC5= TRUE POSITION OF CIRCLE CIR2							
AX	NOMINAL	+TOL	-TOL	BONUS	MEAS	DEV	OUTTOL	
X	0.000				0.000	0.000		
Z	123.571				123.697	0.126		
DF	16.000	0.200	0.200		17.971	1.971	1.771	
TP	RFS	0.400		0.000		0.251	0.000	

PART NUMBER=7.5 KA CURRENT LEAD ASSY (LBNL01) DATE=3/26/2003 TIME=2:44:54 PM

MM	DIM LOC10= TRUE POSITION OF CIRCLE CIR3							
AX	NOMINAL	+TOL	-TOL	BONUS	MEAS	DEV	OUTTOL	
X	-78.890				-78.932	-0.042		
Z	95.047				95.127	0.080		
DF	16.000	0.200	0.200		17.972	1.972	1.772	
TP	RFS	0.400		0.000		0.181	0.000	

MM	DIM LOC11= TRUE POSITION OF CIRCLE CIR4							
AX	NOMINAL	+TOL	-TOL	BONUS	MEAS	DEV	OUTTOL	
X	78.890				78.968	0.078		
Z	95.047				95.263	0.216		
DF	16.000	0.200	0.200		17.972	1.972	1.772	
TP	RFS	0.400		0.000		0.458	0.058	

MM	DIM LOC12= TRUE POSITION OF CIRCLE CIR5							
AX	NOMINAL	+TOL	-TOL	BONUS	MEAS	DEV	OUTTOL	
X	78.890				79.119	0.229		
Z	-95.047				-94.822	0.225		
DF	16.000	0.200	0.200		17.952	1.952	1.752	
TP	RFS	0.400		0.000		0.642	0.242	

MM	DIM 16.00 DIA HOLE #5= TRUE POSITION OF CIRCLE CIR6							
AX	NOMINAL	+TOL	-TOL	BONUS	MEAS	DEV	OUTTOL	
X	-78.918				-78.775	0.143		
Z	-95.047				-94.920	0.127		
DF	16.000	0.200	0.200		17.946	1.946	1.746	
TP	RFS	0.400		0.000		0.383	0.000	

MM	DIM 8.407 DIA HOLE #1= TRUE POSITION OF CIRCLE SH1							
AX	NOMINAL	+TOL	-TOL	BONUS	MEAS	DEV	OUTTOL	
PR	90.550				90.390	-0.160		
PA	-153.000				-153.020	-0.020		
DF	8.407	0.200	0.200		8.529	0.122	0.000	
TP	RFS	0.080		0.000		0.326	0.246	

MM	DIM 8.407 DIA HOLE #2= TRUE POSITION OF CIRCLE SH2							
AX	NOMINAL	+TOL	-TOL	BONUS	MEAS	DEV	OUTTOL	
PR	90.550				90.412	-0.138		
PA	-171.000				-171.036	-0.036		
DF	8.407	0.200	0.200		8.520	0.112	0.000	
TP	RFS	0.080		0.000		0.298	0.218	

MM	DIM 8.407 DIA HOLE #3= TRUE POSITION OF CIRCLE SH3							
AX	NOMINAL	+TOL	-TOL	BONUS	MEAS	DEV	OUTTOL	
PR	90.550				90.378	-0.172		
PA	-135.000				-134.996	0.004		
DF	8.407	0.200	0.200		8.576	0.169	0.000	
TP	RFS	0.080		0.000		0.343	0.263	

PART NUMBER=7.5 KA CURRENT LEAD ASSY (LBNL01) DATE=3/26/2003 TIME=2:44:55 PM

MM	DIM 8.407 DIA HOLE #4= TRUE POSITION OF CIRCLE SH4							
AX	NOMINAL	+TOL	-TOL	BONUS	MEAS	DEV	OUTTOL	
PR	90.550				90.478	-0.072		
PA	171.000				170.948	-0.052		
DF	8.407	0.200	0.200		8.522	0.114	0.000	
TP	RFS	0.080		0.000		0.218	0.138	

MM	DIM 8.407 DIA HOLE #5= TRUE POSITION OF CIRCLE SH5							
AX	NOMINAL	+TOL	-TOL	BONUS	MEAS	DEV	OUTTOL	
PR	90.550				90.491	-0.059		
PA	153.000				152.982	-0.018		
DF	8.407	0.200	0.200		8.576	0.169	0.000	
TP	RFS	0.080		0.000		0.130	0.050	

MM	DIM 8.407 DIA HOLE #6= TRUE POSITION OF CIRCLE SH6							
AX	NOMINAL	+TOL	-TOL	BONUS	MEAS	DEV	OUTTOL	
PR	90.550				90.507	-0.043		
PA	135.000				134.964	-0.036		
DF	8.407	0.200	0.200		8.524	0.117	0.000	
TP	RFS	0.080		0.000		0.143	0.063	

MM	DIM 8.407 DIA HOLE #7= TRUE POSITION OF CIRCLE SH7							
AX	NOMINAL	+TOL	-TOL	BONUS	MEAS	DEV	OUTTOL	
PR	90.550				90.553	0.003		
PA	117.000				116.961	-0.039		
DF	8.407	0.200	0.200		8.532	0.124	0.000	
TP	RFS	0.080		0.000		0.124	0.044	

MM	DIM 8.407 DIA HOLE #8= TRUE POSITION OF CIRCLE SH8							
AX	NOMINAL	+TOL	-TOL	BONUS	MEAS	DEV	OUTTOL	
PR	90.550				90.548	-0.002		
PA	99.000				98.956	-0.044		
DF	8.407	0.200	0.200		8.521	0.113	0.000	
TP	RFS	0.080		0.000		0.141	0.061	

MM	DIM 8.407 DIA HOLE #9= TRUE POSITION OF CIRCLE SH9							
AX	NOMINAL	+TOL	-TOL	BONUS	MEAS	DEV	OUTTOL	
PR	90.550				90.639	0.089		
PA	81.000				80.984	-0.016		
DF	8.407	0.200	0.200		8.524	0.117	0.000	
TP	RFS	0.080		0.000		0.185	0.105	

MM	DIM 8.407 DIA HOLE #10= TRUE POSITION OF CIRCLE SH10							
AX	NOMINAL	+TOL	-TOL	BONUS	MEAS	DEV	OUTTOL	
PR	90.550				90.659	0.109		
PA	63.000				63.012	0.012		
DF	8.407	0.200	0.200		8.535	0.128	0.000	
TP	RFS	0.080		0.000		0.221	0.141	

PART NUMBER=7.5 KA CURRENT LEAD ASSY (LBNL01) DATE=3/26/2003 TIME=2:44:56 PM

MM	DIM 8.407 DIA HOLE #11= TRUE POSITION OF CIRCLE SH11							
AX	NOMINAL	+TOL	-TOL	BONUS	MEAS	DEV	OUTTOL	
PR	90.550				90.643	0.093		
PA	45.000				45.026	0.026		
DF	8.407	0.200	0.200		8.527	0.119	0.000	
TP	RFS	0.080		0.000		0.204	0.124	

MM	DIM 8.407 DIA HOLE #12= TRUE POSITION OF CIRCLE SH12							
AX	NOMINAL	+TOL	-TOL	BONUS	MEAS	DEV	OUTTOL	
PR	90.550				90.714	0.164		
PA	27.000				27.094	0.094		
DF	8.407	0.200	0.200		8.531	0.123	0.000	
TP	RFS	0.080		0.000		0.442	0.362	

MM	DIM 8.407 DIA HOLE #13= TRUE POSITION OF CIRCLE SH13							
AX	NOMINAL	+TOL	-TOL	BONUS	MEAS	DEV	OUTTOL	
PR	90.550				90.704	0.154		
PA	9.000				9.105	0.105		
DF	8.407	0.200	0.200		8.526	0.119	0.000	
TP	RFS	0.080		0.000		0.454	0.374	

MM	DIM 8.407 DIA HOLE #14= TRUE POSITION OF CIRCLE SH14							
AX	NOMINAL	+TOL	-TOL	BONUS	MEAS	DEV	OUTTOL	
PR	90.550				90.622	0.072		
PA	-9.000				-8.851	0.149		
DF	8.407	0.200	0.200		8.520	0.113	0.000	
TP	RFS	0.080		0.000		0.492	0.412	

MM	DIM 8.407 DIA HOLE #15= TRUE POSITION OF CIRCLE SH15							
AX	NOMINAL	+TOL	-TOL	BONUS	MEAS	DEV	OUTTOL	
PR	90.550				90.599	0.049		
PA	-27.000				-26.857	0.143		
DF	8.407	0.200	0.200		8.526	0.118	0.000	
TP	RFS	0.080		0.000		0.462	0.382	

MM	DIM 1450= 2D DISTANCE FROM LINE FRT END TO LINE LIN2 PAR TO YAXIS						
AX	NOMINAL	+TOL	-TOL	MEAS	DEV	OUTTOL	
M	1450.000	0.400	0.400	1452.611	2.611	2.211	

MM	DIM 130.0DIA= LOCATION OF CIRCLE OD1						
AX	NOMINAL	+TOL	-TOL	MEAS	DEV	OUTTOL	
D	130.000	0.200	0.200	130.005	0.005	0.000	

MM	DIM 502 COOLING HOLE= 2D DISTANCE FROM CIRCLE ID15 TO PLANE LRG FLAN						
AX	NOMINAL	+TOL	-TOL	MEAS	DEV	OUTTOL	
M	502.000	0.400	0.400	501.829	-0.171	0.000	

MM	DIM X LOC OF COOLING HOLE- LOCATION OF CIRCLE ID15						
AX	NOMINAL	+TOL	-TOL	MEAS	DEV	OUTTOL	
X	0.000	0.200	0.200	6.262	6.262	6.062	

PART NUMBER=7.5 KA CURRENT LEAD ASSY (LBNL01) DATE=3/26/2003 TIME=2:44:57 PM

DEG	DIM WARM TERMINAL= 3D ANGLE (TRUE) FROM PLANE PLN2 TO ZAXIS					
AX	NOMINAL	+TOL	-TOL	MEAS	DEV	OUTTOL
A	0.000	0.100	0.100	0.214	0.214	0.114

IN	DIM X LOC OF WARM TERM= LOCATION OF PLANE MID PLN					
AX	NOMINAL	+TOL	-TOL	MEAS	DEV	OUTTOL
X	0.000	0.100	0.100	0.009	0.009	0.000

IN	DIM POLAR ANGLE OF COOLING HOLE= LOCATION OF CIRCLE ID15					
AX	NOMINAL	+TOL	-TOL	MEAS	DEV	OUTTOL
PA	90.000	0.500	0.500	83.228	-6.772	6.272

MM	DIM 442.5= 2D DISTANCE FROM LINE FRT END TO PLANE PLN -B- PAR TO YAX					
AX	NOMINAL	+TOL	-TOL	MEAS	DEV	OUTTOL
M	442.500	0.400	0.400	446.142	3.642	3.242

FERMILAB Technical Division	7500A HTS Power leads for the LHC DFBX	Doc. No. Rev. No. Date:January 6, 2003 Page 1 of 1 Author: Sandor Feher
	3. Form for moving power leads	

Power leads need to be moved from NW8 to MTF are:
7500 DFLX 29 & 7500 DFLX 31
Approved by SandorFeher
(name typed) (signature)
Date & time _____

The request should go through Marsha Schmidt who is responsible keeping track of whereabouts of the power leads.

Requested by ROGER RABEHL Roger Rabehl
(name typed) (signature)
Date & time OCTOBER 6, 2003 1030

Delivered by CLIFF DESCH
(name typed) (signature)
Date & time 10/7/03 10:00

Received by FRED WILSON
(name typed) (signature)
Date & time 10-14-03

The next person _____ responsible to perform Checkout form #5 (5. Installation of the current leads into the top plate) has been

Notified by _____
(name typed) (signature)
Date & time _____

This form should be copied and each copy should be placed into the folders of both of the power leads

4. Initial Electrical Checkout

Note: Save the shipping container for storing and moving the leads around TD and after the test is complete to ship them to the DFBX manufacturer.

Performed by DAN EDDY (name typed) (signature)

Date & time 4/01/03 15:30

Power Lead 7500 A DFLX 31

When checkout is complete, make sure you place this document in the Traveler Binder

3.1 Voltage segment and drop measurement.

Apply 5 Amps between the copper flag and the LTS cable.

Record the applied current 5 A

Use HP3458 DVM, set it to 40 line cycle integration time.

Measure the voltages between the following pins:

Voltage tap Connector 1 (Primary) (Fisher DEE104A06)

Pin 1 - pin 2	**(80uv)** 80 V		Pin 2 - pin 3	**(225uv)** 250 V	
Pin 1 - pin 3	**(300uv)** 340 V		Pin 3 - pin 4	**(240uv)** 260 V	
Pin 1 - pin 4	**(530uv)** 600 V		Pin 4 - pin 5	**(float)** FLOAT V	
Pin 1 - pin 5	**(float)** FLOAT V		Pin 5 - pin 6	**(float)** FLOAT V	
Pin 1 - pin 6	**(float)** FLOAT V				

Voltage tap Connector 2 (Redundant) (Fisher DEE104A06)

Pin 1 - pin 2	**(80uv)** 80 V		Pin 2 - pin 3	**(225uv)** 260 V	
Pin 1 - pin 3	**(300uv)** 340 V		Pin 3 - pin 4	**(240`uv)** 260 V	
Pin 1 - pin 4	**(530uv)** 590 V		Pin 4 - pin 5	**(float)** FLOAT V	
Pin 1 - pin 5	**(float)** FLOAT V		Pin 5 - pin 6	**(float)** FLOAT V	
Pin 1 - pin 6	**(float)** FLOAT V				

3.2 Verify that between pin 5 and the coiled wire at the bottom of the lead has continuity:

Connector 1 (Primary) Pin 5 and end of the wire continuity is OK ☑ not OK ☐

Comments_____

Connector 2 (Redundant) Pin 5 and end of the wire continuity is OK ☑ not OK ☐

Comments_____

3.2.1 Using a small piece of fiberglass tape, mark the Primary and Redundant wires

3.3 Temperature sensor resistance measurements.

3.3.1 Two wire measurement on connector 3 (Fisher DEE104Z086):

Resistance between Pin 1	and pin 2	.64 Ω
Resistance between Pin 1	and pin 3	108.60 Ω
Resistance between Pin 1	and pin 4	108.60 Ω
Resistance between Pin 2	and pin 3	108.57 Ω

4. Initial Electrical Checkout

Resistance between Pin 2 and pin 4 108.57 Ω
Resistance between Pin 3 and pin 4 .61 Ω
Pins 1-4 resistance to lead ∞ Ω Pins 1-4 resistance to flange ∞ Ω

Resistance between Pin 5 and pin 6 .64 Ω
Resistance between Pin 5 and pin 7 108.57 Ω
Resistance between Pin 5 and pin 8 108.58 Ω
Resistance between Pin 6 and pin 7 108.59 Ω
Resistance between Pin 6 and pin 8 108.59 Ω
Resistance between Pin 7 and pin 8 .61 Ω
Pins 5-8 resistance to lead ∞ Ω Pins 5-8 resistance to flange ∞ Ω

Resistance between Pin 9 and pin 10 .56 Ω
Resistance between Pin 9 and pin 11 108.41 Ω
Resistance between Pin 9 and pin 12 108.42 Ω
Resistance between Pin 10 and pin 11 108.40 Ω
Resistance between Pin 10 and pin 12 108.40 Ω
Resistance between Pin 11 and pin 12 .52 Ω
Pins 9-12 resistance to lead ∞ Ω Pins 9-12 resistance to flange ∞ Ω

3.3.2 Using HP3458 DVM measure temperature sensor resistance with the four wire measurement technique:

Resistance of T1 107.96 Ω (I+ at pin 1, I- at pin 2, U+ at pin 3, U- at pin 4)
Resistance of T2 107.99 Ω (I+ at pin 5, I- at pin 6, U+ at pin 7, U- at pin 8)
Resistance of T3 107.88 Ω (I+ at pin 9, I- at pin 10, U+ at pin 11, U- at pin 12)

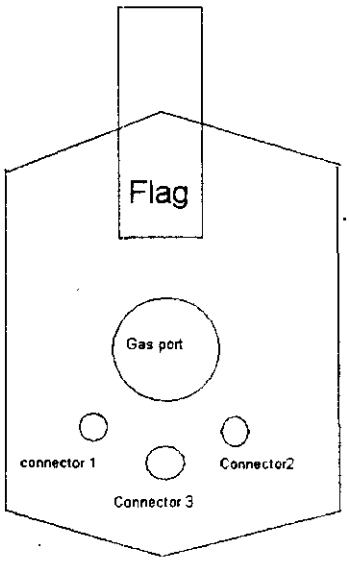

Looking from the top of the lead down where the LTS cable is located.
Connector 2= Redundant and Connector 1= Primary

4. Initial Electrical Checkout

Note: Save the shipping container for storing and moving the leads around TD and after the test is complete to ship them to the DFBX manufacturer.

Performed by DAN EDDY (name typed) Dan Eddy (signature)

Date & time 3/25/03 11:15

Power Lead 7500 A DFLX 29

When checkout is complete, make sure you place this document in the Traveler Binder

3.1 Voltage segment and drop measurement.

Apply 5 Amps between the copper flag and the LTS cable.

Record the applied current 5 A

Use HP3458 DVM, set it to 40 line cycle integration time.

Measure the voltages between the following pins:

Voltage tap Connector 2 ([redacted]) (Fisher DEE104A06)(REDUNDANT)

Pin 1 - pin 2	**(80uv)** 82 V		Pin 2 - pin 3	**(225uv)** 251 V	
Pin 1 - pin 3	**(300uv)** 334 V		Pin 3 - pin 4	**(240uv)** 268 V	
Pin 1 - pin 4	**(530uv)** 604 V		Pin 4 - pin 5	**(float)** FLOAT V	
Pin 1 - pin 5	**(float)** FLOAT V		Pin 5 - pin 6	**(float)** FLOAT V	
Pin 1 - pin 6	**(float)** FLOAT V				

Voltage tap Connector 1 ([redacted]) (Fisher DEE104A06)(PRIMARY)

Pin 1 - pin 2	**(80uv)** 81 V		Pin 2 - pin 3	**(225uv)** 251 V	
Pin 1 - pin 3	**(300uv)** 334 V		Pin 3 - pin 4	**(240`uv)** 266 V	
Pin 1 - pin 4	**(530uv)** 602 V		Pin 4 - pin 5	**(float)** FLOAT V	
Pin 1 - pin 5	**(float)** FLOAT V		Pin 5 - pin 6	**(float)** FLOAT V	
Pin 1 - pin 6	**(float)** FLOAT V				

3.2 Verify that between pin 5 and the coiled wire at the bottom of the lead has continuity:

Connector 1 (Primary) Pin 5 and end of the wire continuity is OK ☑ not OK ☐

Comments

Connector 2 (Redundant) Pin 5 and end of the wire continuity is OK ☑ not OK ☐

Comments

3.2.1 Using a small piece of fiberglass tape, mark the Primary and Redundant wires

3.3 Temperature sensor resistance measurements.

3.3.1 Two wire measurement on connector 3 (Fisher DEE104Z086):

Resistance between Pin 1	and pin 2	.933 Ω
Resistance between Pin 1	and pin 3	108.9 Ω
Resistance between Pin 1	and pin 4	108.9 Ω
Resistance between Pin 2	and pin 3	108.9 Ω

4. Initial Electrical Checkout

Resistance between Pin 2 and pin 4 108.9 Ω
Resistance between Pin 3 and pin 4 .817 Ω
Pins 1-4 resistance to lead ∞ Ω Pins 1-4 resistance to flange ∞ Ω

Resistance between Pin 5 and pin 6 .828 Ω
Resistance between Pin 5 and pin 7 108.9 Ω
Resistance between Pin 5 and pin 8 108.9 Ω
Resistance between Pin 6 and pin 7 108.9 Ω
Resistance between Pin 6 and pin 8 108.9 Ω
Resistance between Pin 7 and pin 8 .816 Ω
Pins 5-8 resistance to lead ∞ Ω Pins 5-8 resistance to flange ∞ Ω

Resistance between Pin 9 and pin 10 .742 Ω
Resistance between Pin 9 and pin 11 108.7 Ω
Resistance between Pin 9 and pin 12 108.7 Ω
Resistance between Pin 10 and pin 11 108.7 Ω
Resistance between Pin 10 and pin 12 108.6 Ω
Resistance between Pin 11 and pin 12 .716 Ω
Pins 9-12 resistance to lead ∞ Ω Pins 9-12 resistance to flange ∞ Ω

3.3.2 Using HP3458 DVM measure temperature sensor resistance with the four wire measurement technique:

Resistance of T1 108.0 Ω (I+ at pin 1, I- at pin 2, U+ at pin 3, U- at pin 4)
Resistance of T2 108.0 Ω (I+ at pin 5, I- at pin 6, U+ at pin 7, U- at pin 8)
Resistance of T3 107.9 Ω (I+ at pin 9, I- at pin 10, U+ at pin 11, U- at pin 12)

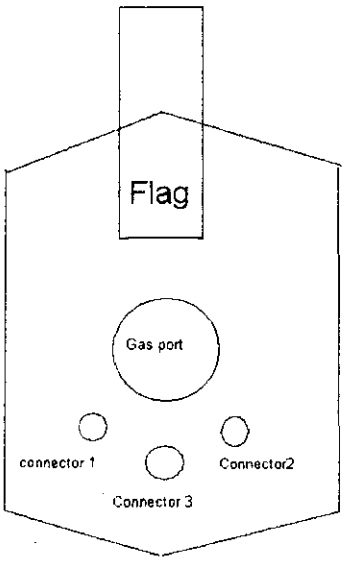

Looking from the top of the lead down where the LTS cable is located.
Connector 2= Redundant and Connector 1= Primary

FERMILAB
Technical Division

7500 A HTS Power Leads for the LHC DFBX: 4a. Preliminary Leak Check Procedure

Lead Number: DFLX 29

Signed _____ Date 10.09.03

1. **Preparation for Leak Checking**
   - **1.1** Attach the lifting/insertion tool to the lead flag as shown in Figure 1.1 and remove the lead from the shipping container.

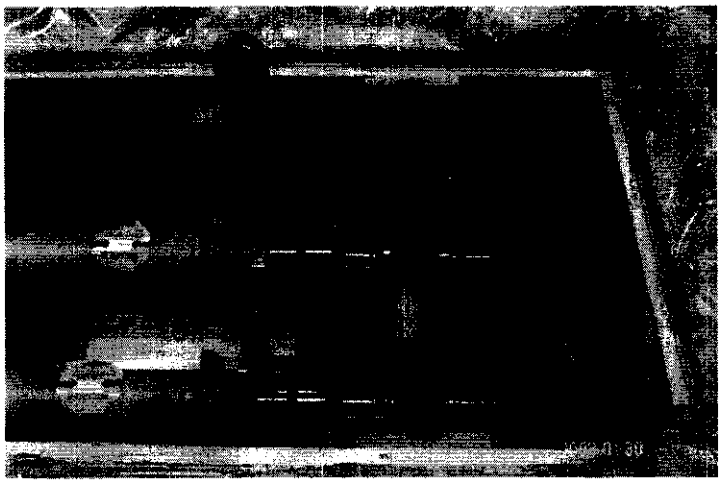

Figure 1.1 The lifting/insertion tool bolted to a power lead in preparation for removing it from the shipping container.

   - **1.2** Remove the plastic plug from the 4-20 K gas inlet on the lead body.
   - **1.3** Put the power lead on the steel table, with the power lead lower flange resting in a V-block.
   - **1.4** Hose clamp a rubber gasket and PVC clamshells around the lead to cover and seal the 4-20 K inlet.
   - **1.5** Attach an adapter to the top of the power lead so that a leak detector can be connected.
   - **1.6** Wrap the voltage tap wires around the bottom of the lead and secure them with tape.

2. **Leak Check-Lead Number** 29
   - **2.1** Pump out the power lead with the leak detector.
   - **2.2** Record the baseline reading from the leak detector.

Baseline: 2.4 e-8 atm cc/s

   - **2.3** Spray all joints with He and watch for a signal from the leak detector
   - **2.4** Record the maximum leak detector reading.

Maximum reading: 2.4 e-8 atm cc/s

FERMILAB
Technical Division

Stand 3 LHC-HTS Lead Testing: 5. Installation of the Current Leads

Lead Pair

Negative Lead: 29

Positive Lead: 31

Signed _____ Date 10-12-03

1. **Mechanical Integration of Current Leads in Test Facility**
   - **1.1** Using wedges, tilt the insert by 10° so that the power leads will be vertical when installed.
   - **1.2** Clean sealing surfaces inside the chimneys with acetone and/or alcohol wipe.
   - **1.3** Position the upper insulator in each chimney according to Figure 1.3.
   - **1.4** Position the PEEK seal in each chimney according to Figure 1.3.
   - **1.5** Position the lower insulator in each chimney according to Figure 1.3.

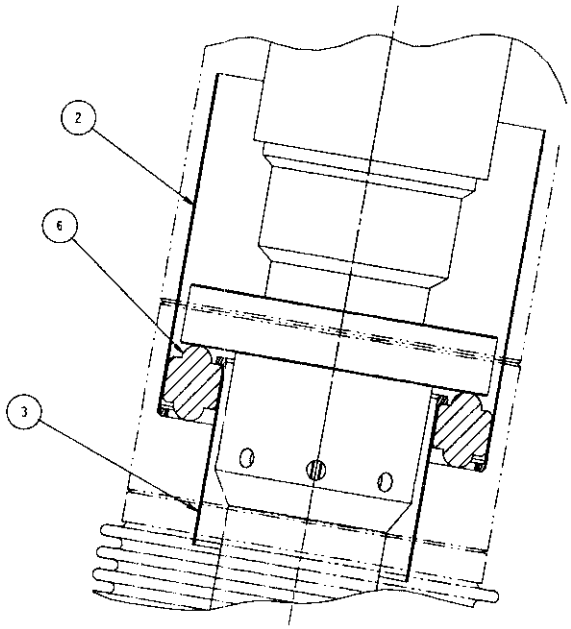

Figure 1.3 2 – Upper Insulator, 3 – Lower Insulator, 6 – PEEK Seal

- **1.6** Attach the lifting/insertion tool to the lead flag as shown in Figure 1.6 and lift the lead from the steel table where the preliminary leak check was performed.

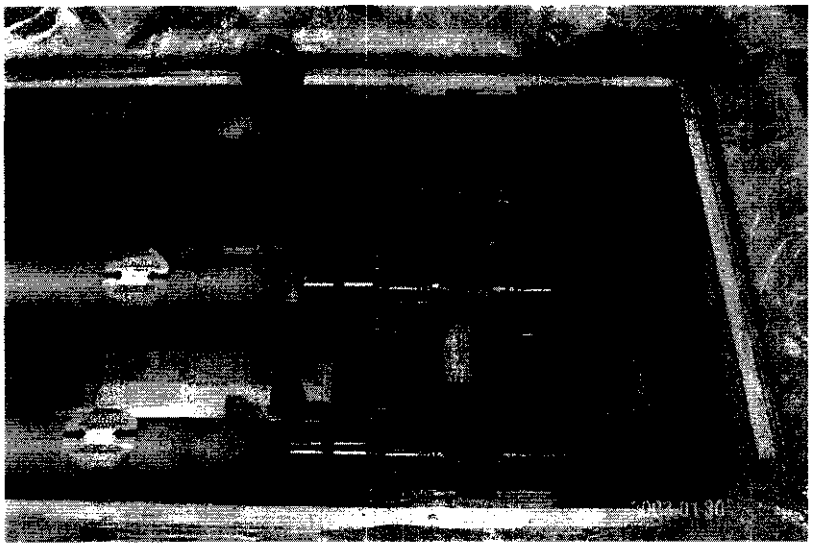

Figure 1.6 The lifting/insertion tool bolted to a power lead.

1.7 Remove the rubber gasket and PVC clamshells from the 4-20 K gas inlet on the lead body.
1.8 Remove the protective covers from the lower and upper flanges.
1.9 With alcohol, clean the lower flange and the upper flange knife edge and sealing surface.
1.10 Prepare to install the power lead baffle by removing the short threaded rods to open the baffle.
1.11 Install the baffle on the lead with the pointed tips of the threaded rods pointing toward the bottom of the lead. An installed baffle is shown in Figure 1.11.

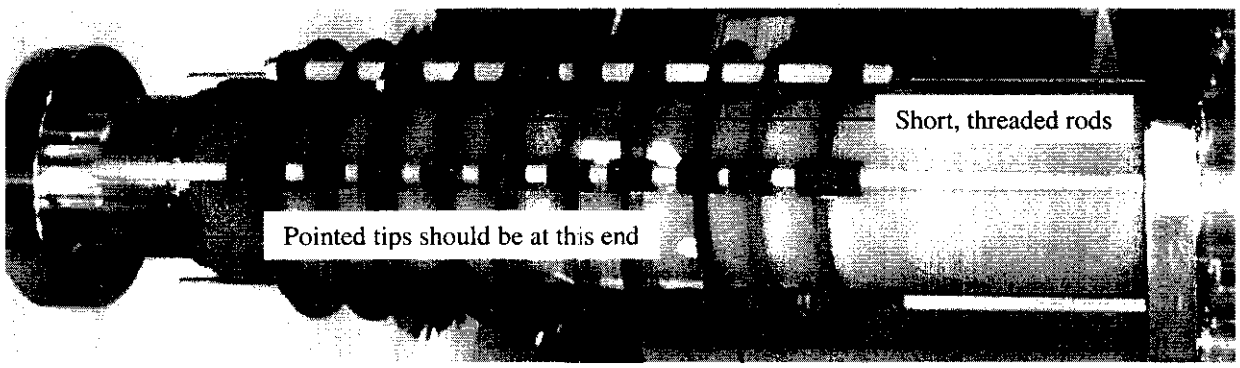

Figure 1.11 A baffle installed on a power lead.

1.12 Clamp the end support around the lower flange so that the handles will rest on the backs on the C-channels clamped to the steel table.
1.13 Set the lead in the C-channels on the steel table.
1.14 Clean the top plate Conflat flange knife edge and copper gasket. Install the gasket on the top plate Conflat flange.

1.15 Align the top plate rotatable Conflat flange to the orientation shown on Figure 1.15, where the leak check grooves on the flange align with the middle tensioning studs.

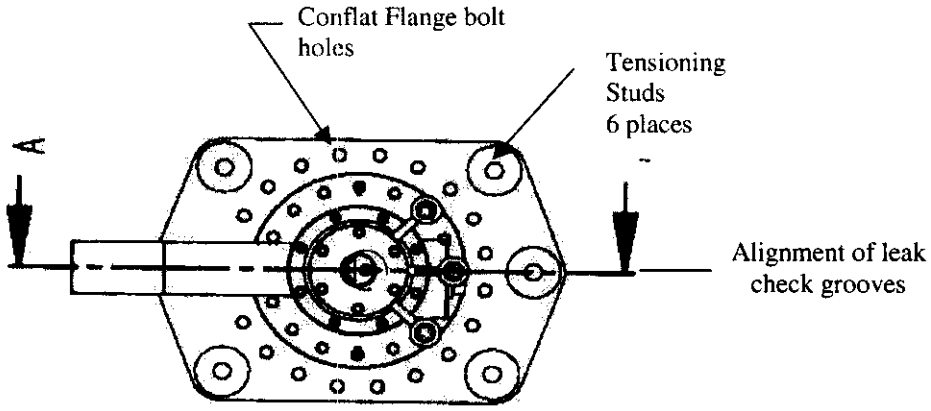

Figure 1.15 The 20-hole Conflat bolt pattern is bisected by center tensioning studs.

1.16 Back down the nuts on the tensioning studs.

1.17 Swing the lifting/insertion tool 180 degrees as shown in Figure 1.17 in preparation for lifting the power lead into the vertical position.

Figure 1.17 The lifting/insertion tool in position to lift the power lead into a vertical position.

1.18 Strapping the overhead crane to the lifting/insertion tool and manually guiding the lower end support, lift the lead and position it vertically while not allowing any loading on the bottom end of the lead.

1.19 Remove the lower end support.

1.20 Tie a weighted string to the LTS bus to help guide it through the chimney during installation.

1.21 Install the lead in the chimney per Figure 1.21a until the lower sealing flange bottoms out. The flag should be toward the bayonet connections on the insert. The negative lead is installed on the left hand side, and the positive lead is installed on the right hand side as shown in Figure 1.21b.

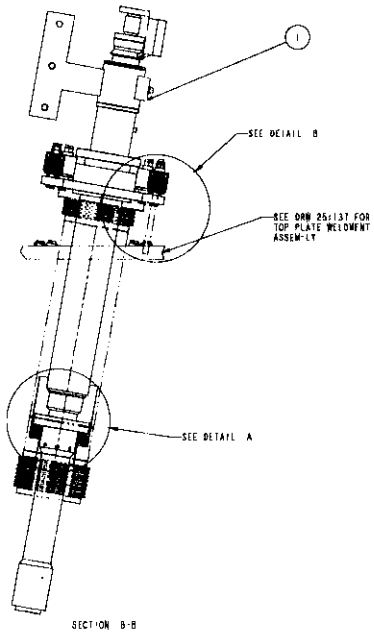

Figure 1.21a HTS Lead in Test Chimney. Note: CERN chimneys do not have bellows.

Negative Lead DFLX 29 Positive Lead DFLX 31

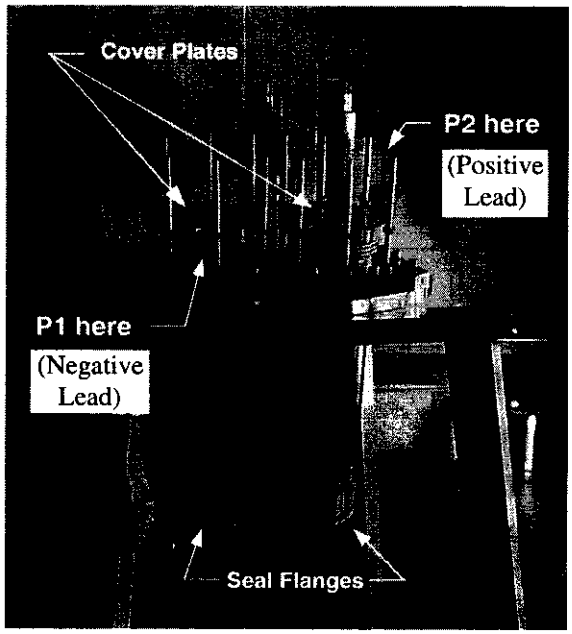

Figure 1.21b Locations of the negative and positive leads.

1.22 Raise the nuts on the tensioning studs to hold the lead in place, as shown in Figure 1.22.

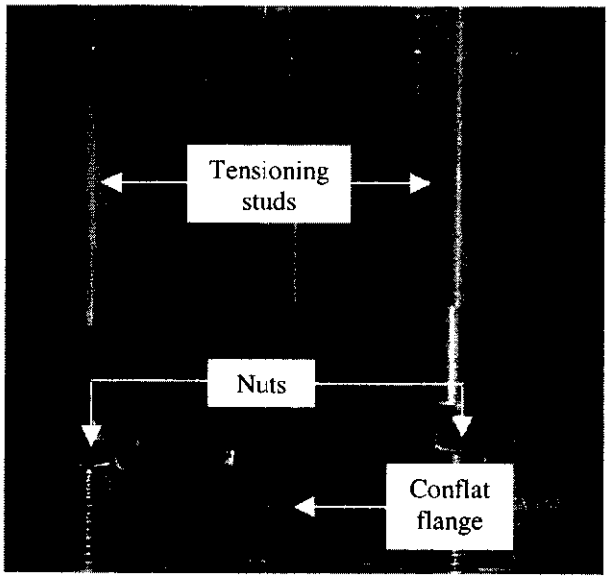

Figure 1.22 The positions of the tensioning studs, nuts, and top plate Conflat flange as the 20 Conflat bolts are tightened.

1.23 Center the lower end of the lead in the chimney using the centering shim blocks. The Teflon inner centering shim blocks are labeled with an 'I' and go between the power lead and the lower insulator. The Teflon outer centering shim blocks are labeled with an 'O' and go between the lower insulator and the chimney. The installed Teflon centering shim blocks are shown in Figure 1.23.

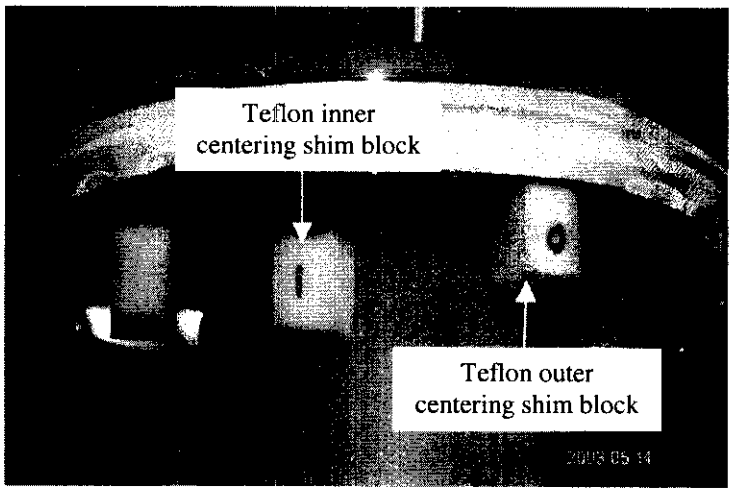

Figure 1.23 The installed Teflon centering shim blocks.

1.24 On the power lead flange, number the Conflat bolt holes 1 through 20 as indicated by Figure 1.24.

1.25 If there is a gap between the top plate Conflat flange and the Pirelli flange, pull the bellows up to close the gap using bolts 1 through 4.

1.26 Use a 5/16 12-point socket to tighten the 20 Conflat bolts. The tightening must be made gradually in ¼ turn increments to a final torque of 15 ft-lbf (180 in-lbf). The tightening sequence is given by Fig. 1.26.

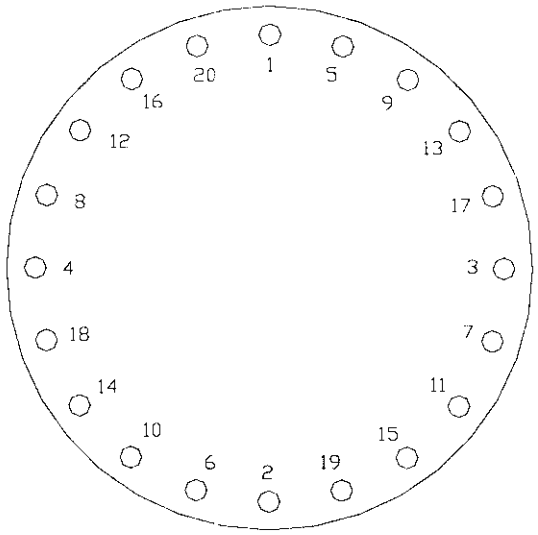

Figure 1.24 Tightening sequence for the 20 Conflat bolts.

1.27 Unbolt the lifting/insertion tool from the installed power lead.

1.28 Install Belleville Washer Assemblies on each tensioning stud per Figures 1.28a and 1.28b. A spherical washer must be placed below the Belleville washer holder on each stud. In the figures: Items 11 (10 each) are Belleville Washers, arranged as shown; Items 6 (2 each) are flat washers; Items 4 and 5 are the Belleville Washer Holder; Item 10 are Spherical Washers for above and below the washer holder; Item 9 is a loading nut; and Item 8 is a jam nut.

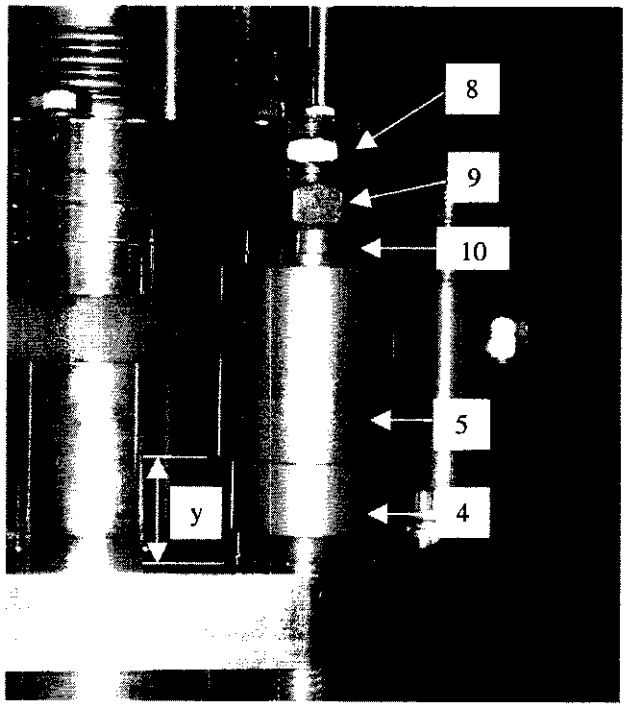

Figure 1.28a An installed Belleville Washer Assembly.

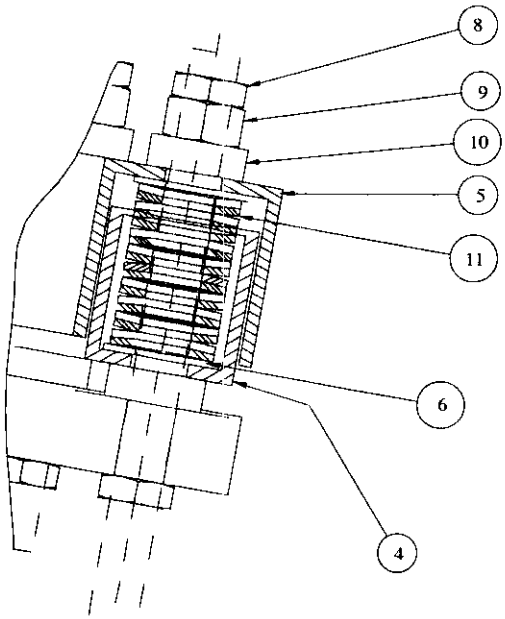

Figure 1.28b An installed Belleville Washer Assembly.

1.29 Tighten the 6 Belleville Washer Assemblies to apply load to the PEEK seal.

1.29.1 Washers for Lead **DFLX** 29

Negative Lead DFLX 29 Positive Lead DFLX 31

1.29.1.1 Ensure that the tensioning rod nuts used in 1.22 have a gap of about 5 mm below the lead flange.

1.29.1.2 Tighten the 6 loading nuts finger-tight. With adjustable parallels, measure and record the gap "y" indicated in Figure 1.28a between Item 5 and the current lead top flange at the 6 locations specified in Figure 1.29.1.5. Units are mm.

A 23.73 B 23.47 C 23.78 D 24.08 E 24.05 F 23.78

1.29.1.3 For each of the six studs: remove the adjustable parallel, adjust it for 1.8 mm of compression, and return the adjustable parallel into position under the Belleville washer holder. Record the adjusted heights of the adjustable parallels. Units are mm.

A 21.93 B 21.67 C 21.98 D 22.28 E 22.25 F 21.98

1.29.1.4 Using the sequence A through F in Figure 1.29.1.5, tighten the loading nuts ¼ turn until the total compression is 1.8 mm at each of the six locations. As each loading nut is tightened ¼ turn, check off the appropriate line.

A ✓ B ✓ C ✓ D ✓ E ✓ F ✓

A ✓ B ✓ C ✓ D ✓ E ✓ F ✓

A ✓ B ✓ C ✓ D ✓ E ✓ F ✓

A ✓ B ✓ C ✓ D ✓ E ✓ F ✓

A ✓ B ✓ C ✓ D ✓ E ✓ F ✓

A ✓ B ✓ C ____ D ✓ E ✓ F ✓

A ✓ B ✓ C ____ D ____ E ____ F ____

A ____ B ____ C ____ D ____ E ____ F ____

Negative Lead DFLX 29 Positive Lead DFLX 31

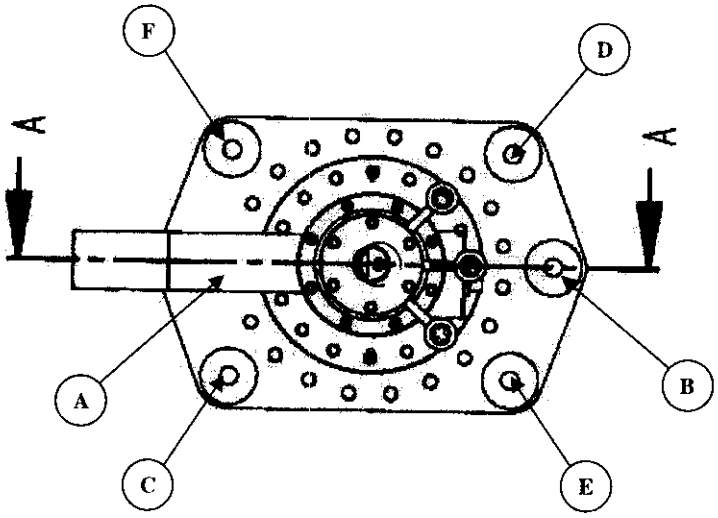

Figure 1.29.1.5 The specified sequence for tightening the Belleville Washer Assemblies.

1.29.1.5 Record the final measured gaps 'y' in Figure 1.28a. Units are mm.

A 21.94 B 21.69 C 21.93 D 22.29 E 22.23 F 22.01

1.29.1.6 Remove the Teflon centering shim blocks from the installed power lead.

1.29.2 Washers for Lead **DFLX** 31

1.29.2.1 Ensure that the nuts used in 1.22 have a gap of about 5 mm below the lead flange.

1.29.2.2 Tighten the 6 loading nuts finger-tight. With adjustable parallels, measure and record the gap "y" indicated in Figure 1.28a between Item 5 and the current lead top flange at the 6 locations specified in Figure 1.29.1.5. Units are mm.

A 23.81 B 24.89 C 23.86 D 24.01 E 24.18 F 23.64

1.29.2.3 For each of the six studs: remove the adjustable parallel, adjust it for 1.8 mm of compression, and return the adjustable parallel into position under the Belleville washer holder. Record the adjusted heights of the adjustable parallels. Units are mm.

A 22.01 B 23.09 C 22.06 D 22.21 E 23.18 F 21.84

1.29.2.4 Using the sequence A through F in Figure 1.29.1.5, tighten the loading nuts ¼ turn until the total compression is 1.8 mm at each of the six locations. As each of the loading nuts is turned ¼ turns, check off the appropriate line.

A ✓ B ✓ C ✓ D — E — F —

Negative Lead DFLX 29 Positive Lead DFLX 31

A ✓ B ✓ C ✓ D ✓ E ✓ F ✓

A ✓ B ✓ C ✓ D ✓ E ✓ F ✓

A ✓ B ✓ C ✓ D ✓ E ✓ F ✓

A ✓ B ✓ C ✓ D ✓ E ✓ F ✓

A ✓ B ✓ C ✓ D ✓ E ✓ F ✓

A ✓ B ✓ C ✓ D ✓ E ____ F ✓

A ✓ B ✓ C ✓ D ✓ E ____ F ____

A ____ B ____ C ✓ D ____ E ____ F ____

1.29.2.5 Record the final measured gaps 'y' in Figure 1.28a. Units are mm.

A 21.65 B 23.10 C 21.96 D 22.14 E 22.90 F 21.81

1.29.2.6 Remove the Teflon centering shim blocks from the installed power lead.

1.30 On both power leads, tighten down the jam nuts to secure the loading nuts on the installed Belleville Washer Assemblies.

1.31 Tighten the nuts on the underside of the current lead top plate against the plate to provide stability during transportation.

2. Pressure Test

2.1 Follow the procedure specified in the document entitled, "7500 A HTS Power Leads for the LHC DFBX: 6. Pressure Test Procedure."

3. Leak Check

3.1 Follow the procedure specified in the document entitled, "7500 A HTS Power Leads for the LHC DFBX: 7. Leak Check Procedure."

4. Electrical Integration of Current Leads in Test Facility

4.1 Attach the G-10 clamshell clamp at the bottoms of the power leads, and install the clamp support.

4.2 Clean the LTS pigtails with alcohol.

4.3 Make connection to LTS pigtails. The joint is a mechanical connection with a stainless steel clamp (supplied by LBNL) and indium foil between the cables to ensure good electrical contact. Figure 4.3a shows a rendition of the installed power leads. Figure 4.3b shows the G-10 clamshell clamp, the clamp support, and the mechanical clamp.

Negative Lead DFLX 29 Positive Lead DFLX 31

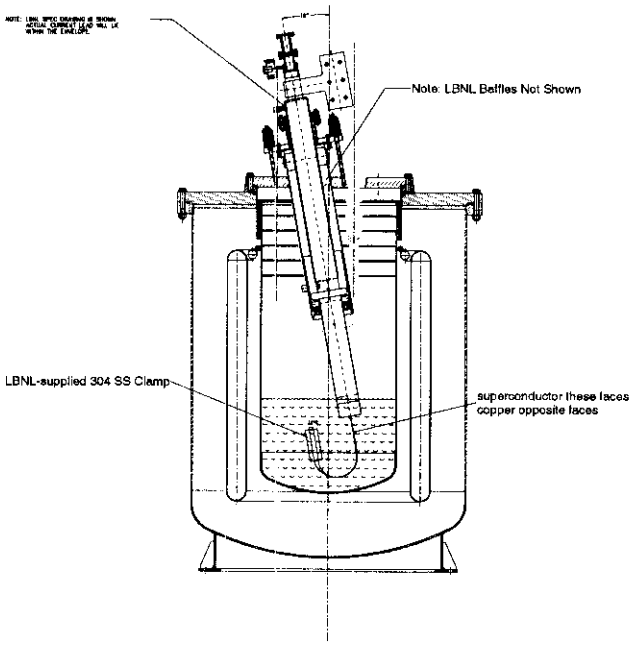

Figure 4.3a Side View of Lead in Cryostat with the LTS cables connected.

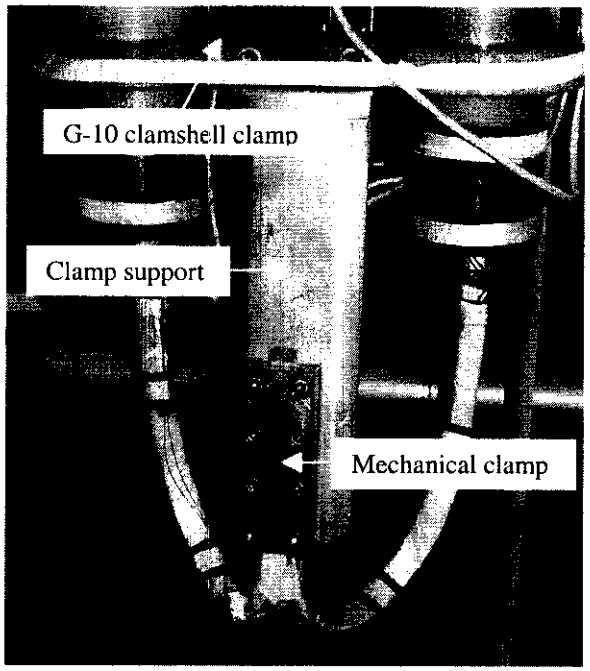

Figure 4.3b Electrical integration of the LTS sections.

4.4 Clamp a piece of bus wire and a little indium to the LTS cable. Solder the two V5 voltage tap wires to the bus wire. Wind excess voltage tap wire around the bottom of the lead, securing it with Kapton and glass tape.

4.5 Insulate the superconducting cable with Kapton and glass tape.

4.6 Install He space temperature sensors and LHe liquid level probes.

4.7 Install the bottom fill tube.

4.8 Bolt the heaters to each power lead. Use grease at the interface to improve the thermal contact between the heater and power lead.

4.9 Measure and record dimensions required for the insert map.

Negative Lead DFLX 29 Positive Lead DFLX 31

FERMILAB
Technical Division

7500 A HTS Power Leads for the LHC DFBX: 6. Pressure Test Procedure

Lead Pair

Negative Lead: 29

Positive Lead: 31

Signed _____ Date 10-12-03

1. **Preparation for Pressurization**
   - **1.1** Install the bayonet plug into the 4-20 K supply bayonet on the top plate. Tie it down.
   - **1.2** On the 4-20 K female bayonet vacuum jacket, cap off one of the 1/4 inch compression fittings. Connect the test gauge and associated tubing to the second 1/4 inch compression fitting.
   - **1.3** Install Conflat blankoffs on the vents of the installed power leads.
   - **1.4** Put the cover cans over each lead vent and tie them down.
   - **1.5** Connect a nitrogen bottle to the pressure test tubing.

2. **Pressurization**
   - **2.1** Pressurize the 4-20 K circuit to 65 psia (50 psig) and record the initial pressure from the test gauge.

     Initial pressure: 65 PSIA

   - **2.2** Wait five minutes and record the final pressure from the test gauge.

     Final pressure: 65 PSIA

3. **Release of Pressure**
   - **3.1** Isolate the nitrogen bottle.
   - **3.2** Release the pressure by opening the hand valve on the pressure test tubing.
   - **3.3** Disconnect the pressure test tubing from the top plate/insert.

Negative Lead DFLX 29 Positive Lead DFLX 31

FERMILAB
Technical Division

7500 A HTS Power Leads for the LHC DFBX: 7. Leak Check Procedure

Lead Pair

Negative Lead: 29

Positive Lead: 31

Signed C.E. Hess Jr. Date 10/13/03

1. **Preparation for Leak Checking**
   - **1.1** Cap/plug the two 1/4 inch compression fittings on the 4-20 K female bayonet vacuum jacket.
   - **1.2** Remove the Conflat blankoff from one of the lead vents and install the modified Conflat with a vacuum pumpout.
   - **1.3** Attach a leak detector to the vacuum pumpout installed on the top of one of the power leads.

2. **Leak Check**
   - **2.1** Pump out the 4-20 K circuit with the leak detector.
   - **2.2** Record the baseline reading from the leak detector.

Baseline: 5.2 e-7 atm cc/s

   - **2.3** Spray all joints with He and watch for a signal from the leak detector
   - **2.4** Record the maximum leak detector reading.

Maximum reading: 5.2 e-7 atm cc/s

Note: There is a leak at the Negative Lead PEEK Seal

Negative Lead DFLX 29 Positive Lead DFLX 31

FERMILAB
Technical Division

7500 A HTS Power Leads for the LHC DFBX: 7a. Top Plate Insertion into the Dewar

Lead Pair

Negative Lead: 29

Positive Lead: 31

Signed _____ Date 10/13/03

✓ **1.** Grease and install an o-ring on the top flange of the dewar extension.

✓ **2.** Remove the 10 degree blocks from under the top plate.

✓ **3.** Lift the top plate and insert from the roll-around cart and set them onto the dewar extension. The leads must be on the south side of the test dewar.

✓ **4.** Install a power lead vent stack on each power lead, keeping in mind the orientation of the vent line.

✓ **5.** Verify that the heaters are bolted to the power leads.

Negative Lead DFLX 29 Positive Lead DFLX 31

9. Room Temperature Electrical Checkout

Note: Save the shipping container for storing and moving the leads around TD and after the test is complete to ship them to the DFBX manufacturer.

Performed by JOHN EDDY (Name typed) (Signature)

Date & time 10-13-03

Pos. Power Lead 7500 A DFLX 31 and Neg. Power Lead 7500 A DFLX 29

When checkout is complete, make sure you place the original and a copy of this document in the Traveler Binder.

1.0 Before beginning checkout, be sure that the following is done:

Make sure all of the 4-pin circular Hypertronic connectors inside dewar have been connected and taped up with fiberglass tape.
Cool down and check pos and neg lead heaters.
Install positive and negative lead heaters.
Be sure to apply thermal compound on the back of heaters before attaching to leads.
Attach primary and redundant labels to the fisher connector assembly on each lead

2.0 Voltage drop measurement for Vtap & flag cables.

2.1 Connect Kepco power supply cable to the LHC power leads. This is the gray two-conductor cable (black to negative lead and clear to positive lead).
2.2 Connect before and After Flags ring terminals to both leads.
2.3 Configure the Kepco distribution box on the Stand 4 platform to power the LHC power leads (jumper should be in the Checkout power/Stand-3 Power leads position).
2.4 Turn on Kepco power supply and set the output for 10 amps. (5v on HP meter=1 amps)
2.5 Connect stand 3 trim current cable to shunt current monitor above the Kepco power supply.
2.6 Log into cryo computer (left computer at Stand 3). Password is: ScMagsRU
NOTE: Be sure that Mike T has rebooted the system and scans are active or values will not show
2.7 Bring up a terminal and type the following to bring up the numerical display
ssh mdtf34
The password is: ScMagsRU
You should be in the directory mdtf34: home/mdtf34/cryo
Type the command: numdisp –n mtfvx27&

9. Room Temperature Electrical Checkout

(numeric display on mtfuz27 shows up)
Click on chooser
Click the File button on numeric display.
Then choose Load setup
Enlarge window
In **directories**, double click: home/mdtf34/cryo/Setups and then home/mdtf34/cryo/Setups/Stand3
After you are in the Stand3 directory, under **Files**: double click LHC02_Dvm_CheckoutVariables.numdisp_setup
This will bring up a preset display with the trim current and all Stand 3 RTD's
You won't need to check the RTD's until later in checkout.
Record the applied current(trim) 10.053 A (Should be approx. 10A)

2.8 Connect both primary and redundant Vtap cables to positive and negative leads.

2.9 Remove the four primary and redundant Vtap cables from the back of the Vtap distribution box (these cables are located on the right side).

2.10 Using the dual 8-pin breakout box, connect the cables as per the following instructions:

2.11 Use HP3458 DVM, set it to 40-line cycle integration time.

Positive Lead (single cable test)
Voltage tap Connector 1 (**Primary**)

Pin 1 - pin 2 **(160uv)** 163 u V
Pin 1 - pin 3 **(610uv)** 666 u V
Pin 1 - pin 4 **(1.1mv)** 1.174m V
Pin 1 - pin 5 **(4.7mv)** 4.99 m V
Pin 1 - pin 6 **(float)** FLOAT V
Pin 1 - pin 7 **(-20uv)** -22 u V
Pin 1 - pin 8 **(-20uv)** -15 u V

Pin 2 - pin 3 **(450uv)** 499 u V
Pin 3 - pin 4 **(480uv)** 505 u V
Pin 4 - pin 5 **(3.5mv)** 3.82 m V
Pin 5 - pin 6 **(float)** FLOAT V
Pin 6 – pin 7 **(float)** FLOAT V
Pin 7 – pin 8 **(0v)** 39 u V

Voltage tap Connector 2 (**Redundant**)
Pin 1 - pin 2 **(160uv)** 163 u V
Pin 1 - pin 3 **(610uv)** 664 u V
Pin 1 - pin 4 **(1.1mv)** 1.17m V
Pin 1 - pin 5 **(4.7mv)** 4.99m V
Pin 1 - pin 6 **(float)** FLOAT V

Pin 2 - pin 3 **(450uv)** 500 u V
Pin 3 - pin 4 **(480uv)** 500 u V
Pin 4 - pin 5 **(3.5mv)** 3.82 m V
Pin 5 - pin 6 **(float)** FLOAT V

9. Room Temperature Electrical Checkout

Negative Lead (single cable test)

Voltage tap Connector 1 (**Primary**)

Pin 1 - pin 2 **(-160uv)** -161u V Pin 2 - pin 3 **(-450uv)** -506u V
Pin 1 - pin 3 **(-600uv)** -676u V Pin 3 - pin 4 **(-480uv)** -549u V
Pin 1 - pin 4 **(-1.1mv)** -1.22m V Pin 4 - pin 5 **(-3.5mv)** -3.67m V
Pin 1 - pin 5 **(-4.7mv)** -4.9m V Pin 5 - pin 6 **(float)** FLOAT V
Pin 1 - pin 6 **(float)** FLOAT V Pin 6 – pin 7 **(float)** FLOAT V
Pin 1 - pin 7 **(+20uv)** 90u V Pin 7 – pin 8 **(0v)** -28u V
Pin 1 - pin 8 **(+20uv)** 64u V

Voltage tap Connector 2 (**Redundant**)

Pin 1 - pin 2 **(-160uv)** -166u V Pin 2 - pin 3 **(-450uv)** -505u V
Pin 1 - pin 3 **(-600uv)** 668u V Pin 3 - pin 4 **(-480uv)** -554u V
Pin 1 - pin 4 **(-1.1mv)** -1.22m V Pin 4 - pin 5 **(-3.5mv)** -3.68m V
Pin 1 - pin 5 **(-4.7mv)** -4.9m V Pin 5 - pin 6 **(float)** FLOAT V
Pin 1 - pin 6 **(float)** FLOAT V

Connection 1 (**Primary**) (dual cable test)

Positive Lead Pin 1 - Negative Lead pin 5 **(3.7mv)** 3.54m V
Positive Lead Pin 1 - Negative Lead pin 4 **(7.3mv)** 7.62m V
Positive Lead Pin 1 - Negative Lead pin 3 **(7.7mv)** 7.57m V
Positive Lead Pin 1 - Negative Lead pin 2 **(8.2mv)** 8.07m V
Positive Lead Pin 1 - Negative Lead pin 1 **(8.3mv)** 8.29m V

Connection 2 (**Redundant**) (dual cable test)

Positive Lead Pin 1 - Negative Lead pin 5 **(3.7mv)** 3.54m V
Positive Lead Pin 1 - Negative Lead pin 4 **(7.3mv)** 7.62m V
Positive Lead Pin 1 - Negative Lead pin 3 **(7.7mv)** 7.57m V
Positive Lead Pin 1 - Negative Lead pin 2 **(8.2mv)** 8.07m V
Positive Lead Pin 1 - Negative Lead pin 1 **(8.3mv)** 8.23m V

2.12 When finished taking voltage measurements reconnect the Vtap cables on back of the Vtap Distribution box.

3.0 Voltage Drop measurements for Quench Character Cables

3.1 Connect QC POS LEAD & QC NEG LEAD Connectors on Stand 4 platform Quench Management Vtap Box to the breakout box.

3.2 Use a handheld DVM to check the voltages on specified pins.

9. Room Temperature Electrical Checkout

QC POS LEAD

Pin 1 - pin 2 **(160uv)** 160.4 V
Pin 3 - pin 4 **(950uv)** 1.01m V
Pin 5 - pin 6 **(480uv)** 500.4 V
Pin 7 - pin 8 **(3.5mv)** 3.82m V

QC NEG LEAD

Pin 1 - pin 2 **(-160uv)** -160.4 V
Pin 3 - pin 4 **(-950uv)** 1.05.n V
Pin 5 - pin 6 **(-480uv)** -530.4 V
Pin 7 - pin 8 **(-3.5mv)** -3.68m V

3.3 When voltage measurements are complete, turn off kepco power supply and disconnect kepco power cable on positive and negative LHC power leads. Disconnect the before and After Flags.

4.0 RTD resistance measurements.

4.1 Using the special RTD test cable (cable should be located in the bottom of the rack for Stand 3), use the standard blue breakout box (box should be in the breakout box cabinet), connect it to each LEADS RTD connectors. This is the connector between the primary and redundant Vtap connectors. Each RTD connector connect to 3 sets of RTDs. The LHC lead RTD's are

4.2 511-3, 512-3, 509-3A, 509-3B, 510-3A, and 510-3B.

4.3 Using a hand-held meter, perform a two-wire measurement on connector #3 of Positive Lead

Resistance between Pin 1 and pin 2 **(.800)** 1.2 Ω
Resistance between Pin 1 and pin 3 **(109)** 109.3 Ω
Resistance between Pin 1 and pin 4 **(109)** 109.8 Ω
Resistance between Pin 2 and pin 3 **(109)** 109.7 Ω
Resistance between Pin 2 and pin 4 **(109)** 109.7 Ω
Resistance between Pin 3 and pin 4 **(.800)** 1.1 Ω

Pins 1-4 resistance to lead **(infinite)** ∞ Ω
Pins 1-4 resistance to ground **(infinite)** ∞ Ω

DFLX 31 DFLX 29

9. Room Temperature Electrical Checkout

Resistance between Pin 5 and pin 6 **(.800)** 1.2 Ω
Resistance between Pin 5 and pin 7 **(109)** 109.9 Ω
Resistance between Pin 5 and pin 8 **(109)** 109.8 Ω
Resistance between Pin 6 and pin 7 **(109)** 109.8 Ω
Resistance between Pin 6 and pin 8 **(109)** 109.7 Ω
Resistance between Pin 7 and pin 8 **(.800)** 1.2 Ω

Pins 5-8 resistance to lead **(infinite)** ∞ Ω
Pins 5-8 resistance to ground **(infinite)** ∞ Ω

Resistance between Pin 9 and pin 10 **(.800)** 1.1 Ω
Resistance between Pin 9 and pin 11 **(109)** 109.5 Ω
Resistance between Pin 9 and pin 12 **(109)** 109.5 Ω
Resistance between Pin 10 and pin 11 **(109)** 109.5 Ω
Resistance between Pin 10 and pin 12 **(109)** 109.5 Ω
Resistance between Pin 11 and pin 12 **(.800)** 1.1 Ω

Pins 9-12 resistance to lead **(infinite)** ∞ Ω
Pins 9-12 resistance to ground **(infinite)** ∞ Ω

4.4 Using HP3458 DVM measure temperature sensor resistance with the four wire measurement technique:

Resistance of T1 108.58 Ω**(108.5)**(I+ at pin 1,U+ at pin 2,I- at pin 3,U- at pin 4)
Resistance of T2 108.58 Ω**(108.5)** (I+ at pin 5, U+ at pin 6, I- at pin 7, U- at pin 8)
Resistance of T3 108.46 Ω**(108.5)**(I+ at pin 9,U+ at pin 10,I- at pin 11,U- at pin 12)

4.5 Two wire measurement on connector 3 of Negative Lead (Fisher DEE104Z086):

Resistance between Pin 1 and pin 2 **(.800)** 1.2 Ω
Resistance between Pin 1 and pin 3 **(109)** 109.5 Ω
Resistance between Pin 1 and pin 4 **(109)** 109.8 Ω
Resistance between Pin 2 and pin 3 **(109)** 109.7 Ω
Resistance between Pin 2 and pin 4 **(109)** 109.7 Ω
Resistance between Pin 3 and pin 4 **(.800)** 1.1 Ω

Pins 1-4 resistance to lead **(infinite)** ∞ Ω
Pins 1-4 resistance to ground **(infinite)** ∞ Ω

DFLX 31 DFLX 29

9. Room Temperature Electrical Checkout

Resistance between Pin 5 and pin 6 **(.800)** 1.2 Ω
Resistance between Pin 5 and pin 7 **(109)** 109.7 Ω
Resistance between Pin 5 and pin 8 **(109)** 109.7 Ω
Resistance between Pin 6 and pin 7 **(109)** 109.7 Ω
Resistance between Pin 6 and pin 8 **(109)** 109.7 Ω
Resistance between Pin 7 and pin 8 **(.800)** 1.1 Ω

Pins 5-8 resistance to lead **(infinite)** ∞ Ω
Pins 5-8 resistance to ground **(infinite)** ∞ Ω

Resistance between Pin 9 and pin 10 **(.800)** 1.1 Ω
Resistance between Pin 9 and pin 11 **(109)** 109.5 Ω
Resistance between Pin 9 and pin 12 **(109)** 109.5 Ω
Resistance between Pin 10 and pin 11 **(109)** 109.5 Ω
Resistance between Pin 10 and pin 12 **(109)** 109.7 Ω
Resistance between Pin 11 and pin 12 **(.800)** 1.1 Ω
Pins 9-12 resistance to lead **(infinite)** ∞ Ω
Pins 9-12 resistance to ground **(infinite)** ∞ Ω

4.6 Using HP3458 DVM measure temperature sensor resistance with the four wire measurement technique:
Resistance of T1 108.00 Ω**(108.5)**(I+ at pin 1,U+ at pin 2,I- at pin 3,U- at pin 4)
Resistance of T2 108.03 Ω **(108.5)**(I+ at pin 5, U+ at pin 6, I- at pin 7, U- at pin 8)
Resistance of T3 108.12 Ω**(108.5)**(I+ at pin 9,U+ at pin 10,I- at pin 11,U- at pin 12)

4.7 Check remaining RTDs

RTDs in the Dewar
(530-3, 531-3, 532-3, 533-3, 534-3, 535-3
Top of leads
507-3A, 507-3B
Connect four-pin N2 shield
594-3
Connect four-pin outlet HE for each lead
513-3, 514-3
Connect cables for three 19-pin top plate connectors
dewar 0, dewar 1, dewar inlet HE te/ll

All Stand 3 RTD's can be read out on the numeric display that was opened earlier in the checkout. Be sure that Mike T has rebooted the system and scans are active. Check that all Temps for the RTDs read approximately 295K on all channels below.

9. Room Temperature Electrical Checkout

507-3A, 507-3B, 509-3A, 509-3B, 510-3A, 510-3B, 511-3, 512-3, 513-3
514-3, 515-3, 516-3, 526-3, 530-3, 531-3, 532-3, 533-3, 534-3, 535-3,
594-3

4.8 TE 507-3B doesn't always read the correct temp; the display will have 507-3B's resistance. It should read approx. 60 Ω.
To exit click Exit.

4.9 Check all three liquid levels probes (12", 30", and 36").
The 12" liquid level is connected to pins 9-12 of "dewar inlet HE te/ll" cable.
Connect 4-pin cable on top plate for 30" probe.
Disconnect J1 at the back of each liquid level meter and do a 4-wire resistance measurement on each probe.

Using a breakout box measure the resistance of each probe on J1:

1. pin1(red) to pin 8(blue) should be approx. 5 Ω
2. pin 8(blue) to pin 6(yellow) should be approx. (13.75 X active length of probe) 165 Ω for 12" and 412.5 Ω for 30"
3. pin 6(yellow) to pin 7(black) should be something less than 5 Ω
4. pin 1(red) to pin 7(black) should approximately equal resistance from #2 + #1

4.10 Do a 4-Wire resistance measurement:
12" Dewar 163.8 Ω 30" Dewar 403.1 Ω 30" Phase sep. 403.8 Ω

	12" Dewar	30"Dewar	30" Phase sep
1.1(red) to 8(blue)	6.9 Ω	7.6 Ω	7.7 Ω
2. 8(blue) to 6(yellow)	166.5 Ω	404.9 Ω	406.5 Ω
3. 6(yellow) to 7(black)	3.0 Ω	1.8 Ω	2.6 Ω
4. 1(red) to 7(black)	171.1 Ω	410.0 Ω	411.6 Ω

DFLX 31 DFLX 29

9. Room Temperature Electrical Checkout

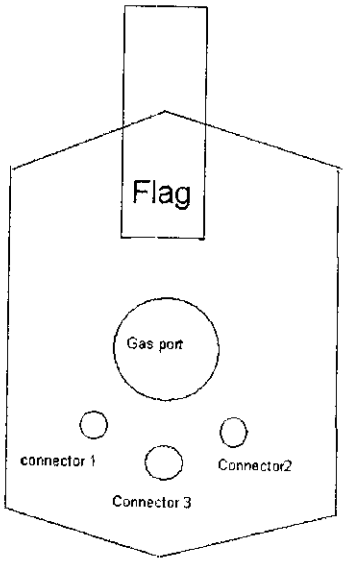

Looking from the top of the lead down where the LTS cable is located.
Connector 2= Redundant, Connector 1= Primary and Connector 3= RTD.

NOTE: After checkout is complete, be sure to set up kepco with function generator for +/- 10 amps and then turn off. Cryo techs will turn on when they begin cool down.

Set up function generator for square wave. You should see current go from +10A to –10A. Frequency should be set at .01 (approx. 100 seconds).

FERMILAB
Technical Division

7500 A HTS Power Leads for the LHC DFBX: 10. Installation of the Top Plate

Lead Pair

Negative Lead: 29

Positive Lead: 31

Signed C.E. [illegible] **Date** 10/13/03

✓ **1.** Install all bolts to fasten the top plate to the dewar extension.

✓ **2.** Loosen the tensioning rod nuts on the undersides of the lead plates at least 0.5 mm below the lead plate.

✓ **3.** Install the transfer lines for maintaining the test dewar liquid level.

✓ **4.** Install the transfer lines supplying the 4-20 K circuit.

✓ **5.** Install the test dewar flexible vent line.

✓ **6.** Connect the vent lines (thermally insulated, non-conductive hoses) to the power lead vent stacks.

✓ **7.** Connect the lines labeled "+ LD PDT L" and "- LD PDT L" to the positive and negative lead vent stacks, respectively. These lines connect to the low side of the differential pressure transducers.

✓ **8.** Connect the lines labeled "+ LD PDT H" and "- LD PDT H" at the 4-20 K female bayonet vacuum jacket. These lines connect to the high side of the differential pressure transducers.

✓ **9.** Connect the power leads' warm gas supply line to the 4-20 K transfer line.

✓ **10.** Connect one end of the bypass line at the phase separator and the other end at the vent piping.

Negative Lead DFLX 29 Positive Lead DFLX 31

FERMILAB Technical Division	7500A HTS Power leads for the LHC DFBX	Doc. No. Rev. No. Date: March 5,2003 Page 1 of 1 Author: Dan Eddy
	10.1 Warm Temp Hi-pot In Gasous He Environment	

Note: Save the shipping container for storing and moving the leads around TD and after the test is complete to ship them to the DFBX manufacturer.

Performed by DAN EDDY (Name typed) Dan Eddy (Signature)

Date & time 10-13-03

Pos. Power Lead 7500 A DFLX 29 and Neg. Power Lead 7500 A DFLX 21

This hi-pot should be performed after dewar has been filled with gaseous helium. Notify the Cryo Operator before you disconnect cables. When checkout is complete, make sure you place the original and a copy of this document in the Traveler Binders.

1.0 Short all of the temperature sensors together using the special RTD high pot cable. High pot each set of temperature sensor to 300v with respect to the Lead (ground).

Record breakdown voltage (if any) —— V.
Record current .01 μ A

1.2 Hi-pot the leads in a gaseous He environment to 1500V (1.3 Bar) using a Droege HV power supply. Connect the positive clip to one lead and the negative clip to ground. Also, short all of the temperature sensors together using the special RTD high pot cable. Connect the ring terminal from each connector to the flag of each lead. **Be sure to disconnect all voltage tap cables on both leads and the power connections from Kepco power supply.**

Record breakdown voltage (if any) —— V.
Record current .07 μ A.
Record approximate temp. 295 K.
Record approximate test dewar pressure _____ PSIG.

NOTE: After checkout is complete, be sure to set up kepco with function generator for +/- 10 amps and then turn off. Cryo techs will turn on when they begin cool down. Also reconnect Vtaps and RTDs when finished.

Set up function generator for square wave. You should see current go from +10A to –10A. Frequency should be set at .01 (approx. 100 seconds).

FERMILAB
Technical Division

7500 A HTS Power Leads for the LHC DFBX: 12. Cooldown Checklist

Lead Pair

Negative Lead: DFLX 29

Positive Lead: DFLX 31

Signed (GEORGE KIRSCHBAUM, AL RUSY) Date 10/14/03

✓ 1. ±5 A applied to the current leads during cooldown.

NO 2. DAQ system is operational (temperature sensor readouts in the test dewar helium space are updating).

✓ 3. Test dewar and power leads cooled down as per the cooldown procedure "7500 A HTS Power Leads for the LHC DFBX: 12a. Cryogenic Operating Procedure".

Negative Lead DFLX 29 Positive Lead DFLX 31

FERMILAB Technical Division	7500A HTS Power leads for the LHC DFBX	Doc. No. Rev. No. Date: March 5,2003 Page 1 of 1 Author: Dan Eddy
	13. Cold Temp Hi-pot In HE Environment	

Note: Save the shipping container for storing and moving the leads around TD and after the test is complete to ship them to the DFBX manufacturer.

Performed by Dan W _____ (Name typed) _____ (Signature)

Date & time 10-14-03

Pos. Power Lead 7500 A DFLX 31 and Neg. Power Lead 7500 A DFLX 29

This hi-pot should be performed after dewar has been filled with liquid helium. Notify the Cryo Operator before you disconnect cables. When checkout is complete, make sure you place the original and a copy of this document in the Traveler Binders.

1.1 Short all of the temperature sensors together using the special RTD high pot cable. High pot each set of temperature sensor to 300v with respect to the Lead (ground).

Record breakdown voltage (if any) — V.
Record current .01 ~ A

1.2 Hi-pot the leads in a cold (4.5K) He environment to 1500V (1.3 Bar) using a Droege HV power supply. Connect the positive clip to one lead and the negative clip to ground. Also, short all of the temperature sensors together using the special RTD high pot cable. Connect the ring terminal from each connector to the flag of each lead. **Be sure to disconnect the redundant voltage taps on both leads and the power connections from Kepco power supply.**

Record breakdown voltage (if any) — V.
Record current .15 ~ A.
Record approximate temp. 4.2 K.
Record approximate test dewar pressure 16.9 PSIA.

NOTE: Reconnect Vtaps and RTDs when finished.

FERMILAB
Technical Division

7500 A HTS Power Leads for the LHC DFBX: 14. Connect the Leads to the Power Supply & Configure

Lead Pair

Negative Lead: DFLX29

Positive Lead: DFLX31

Signed Roger Rabehl Date 10/14/03

1. **Power Supply Changes**

✓ **1.1** On the FIX32 HMTF Power Interlock screen, switch the selector switch to the Stand 3 position.

✓ **1.2** Switch warning lights to the "Stand 3" position.

✓ **1.3** Adjust the power supply time constant by setting the resistance to 500 μΩ.

✓ **1.4** Adjust the power supply time constant by setting the inductance to 0.5 mH.

✓ **1.5** Adjust the dump resistance to 30 mΩ.

2. **Bus Connection Changes – Stand 3 Side**

✓ **2.1** Perform MTF-ELEC-07 (VMTF/ST4/ST3) LOTO procedure for all handling of flexible bus work.

✓ **2.2** Mate the Stand 3 hard bus with the Stand 4 flexible bus on the Stand 4 platform. Verify the polarity is correct.

✓ **2.3** Disconnect trim current supply leads.

✓ **2.4** Connect the flex leads and chill blocks to the power lead flags. Apply Penetrox E conductive grease to the cooling block-lead flag joint.

✓ **2.5** Attach voltage taps VFF-A and VFF-B at the negative and positive flex lead flags, respectively, and voltage VLF-A and VLF-B at the negative and positive power lead flags, respectively. These taps will allow the voltage drop across the flex lead/chill block joint and chill block/power lead joint to be measured.

✓ **2.6** Using glass tape, attach the Kapton-wrapped platinum temperature sensors TE515-3 and TE516-3 to the positive and negative lead flags, respectively.

✓ **2.7** Wrap the power lead flags with rubber insulation for personnel safety.

✓ **2.8** Install the plexiglass enclosure around the power leads for personnel safety.

3. **Bus Connection Changes – VMTF End**

✓ **3.1** Remove the short VMTF flex leads from the 30 kA bus work.

Negative lead DFLX 29 Positive lead DFLX 31

✓ **3.2** Install flex leads from the Stand 4 bus to the 30 kA bus work.

✓ **3.3** Wrap all exposed bus with rubber insulation for personnel safety.

✓ **3.4** Place the VMTF ground switch in the "off" position.

✓ **3.5** Place the Stand 4 ground switch in the "on" position.

✓ **3.6** Place the Stand 3/VMTF ground switch on the ETS panel in the Stand 3 (up) position and press the Master Reset.

✓ **3.7** Remove the power control cable, which contains QLM, PLC, etc. signals, from the VMTF "j" plug and insert into the Stand 4 "j" plug.

Negative lead DFLX 29 Positive lead DFLX 31

16. Cold test of the power leads

Performed by ROGER RABEHL (name typed) Roger Rabehl (signature)

Date & time OCTOBER 14, 2003 1030

Power Lead 7500 A DFLX 29 & 7500 A DFLX 31

✓16.0 Set the DAQ system ScribeLeads and ScribeFix32 Data Logging Intervals to capture data every 5 seconds.

16.1. Establish cryogenic parameters for normal high current operating conditions.
Set the liquid level at 6in location using the 1 foot LL probe ✓
Set the copper section inlet cooling gas temperature to 15-20K range ✓
Set the LHe vapor cooling control loop in automatic mode to keep the upper HTS terminal temperature at 45 K for ½ hour ✓
Neg. lead flow rate 0.144 g/s Pos. lead flow rate 0.156 g/s
Neg. lead diff. pressure 0 mbar Pos. lead diff. pressure 0 mbar
Set the upper HTS temperature to 50 K and keep it there for ½ hour ✓
Neg. lead flow rate 0.129 g/s Pos. lead flow rate 0.141 g/s
Neg. lead diff. pressure 0 mbar Pos. lead diff. pressure 0 mbar
Frost observed on leads? (Y/N) N

✓16.1.1 Set software quench detection thresholds by executing:
/usr/vmtf/sh/lhchts_setquenchthreshold_run.sh

✓16.2 Stair step profile test.
Turn on the Power Supply. Set HTS terminal temperature to 50K and apply current profile 1 (/usr/vmtf/sh/hmtf3_run_prf.sh) ✓
Monitor voltages and make sure that the data is recorded.
Run data analysis tool on the obtained data file to determine joint resistances.

7500 A DFLX 29 R(joint between V2 & V3) = $\frac{0.000120 + 0.000176\ V}{7500\ A} = 39.5\ n\Omega$
R(joint between V3 & V4) = $\frac{0.000233 - 0.000218\ V}{7500\ A} = 2.0\ n\Omega$

7500 A DFLX 31 R(joint between V2 & V3) = $\frac{0.000334 - 0.000067\ V}{7500\ A} = 38.9\ n\Omega$
R(joint between V3 & V4) = $\frac{0.000329 - 0.000304\ V}{7500\ A} = 3.3\ n\Omega$

✓16.3 Coolant loss test.
Apply 7500 A and
a) Close the coolant flow for 7500 A DFLX 29
Wait until QD detects the quench and record
T1 = 81 K ; T2 = 305 K; V12 = -0.1 V ; V23 = -0.91 mV; V34 = 0.22 mV;

T1 is the HTS warm terminal temp., TI509-3 (neg. lead) or TI510-3 (pos. lead).
T2 is the upper copper temp., TI511-3 (neg. lead) or TI512-3 (pos. lead).

16. Cold test of the power leads

b) Re-establish operating conditions

c) Close the coolant flow for 7500 A DFLX 31
Wait until QD detects the quench and record
T1 = 80 K ; T2 = 301 K ; V12 = 0.099 V; V23 = 0.99 mV; V34 = 0.32 mV;

16.4a Set the upper HTS terminal temperature to 45 K and apply current profile 2.
Neg. lead flow rate 0.448 g/s Pos. lead flow rate 0.455 g/s
Neg. lead diff. pressure 2.5 mbar Pos. lead diff. pressure 4.3 mbar

16.4b Set HTS terminal temp to 50 K and apply current profile 2.
Neg. lead flow rate 0.432 g/s Pos. lead flow rate 0.436 g/s
Neg. lead diff. pressure 2.3 mbar Pos. lead diff. pressure 4.2 mbar

16.5 When test is completed, set the ScribeLeads and ScribeFix32 Data Logging Intervals to 300 seconds.

Note: If any irregularity occur call Sandor.

Profile 1:

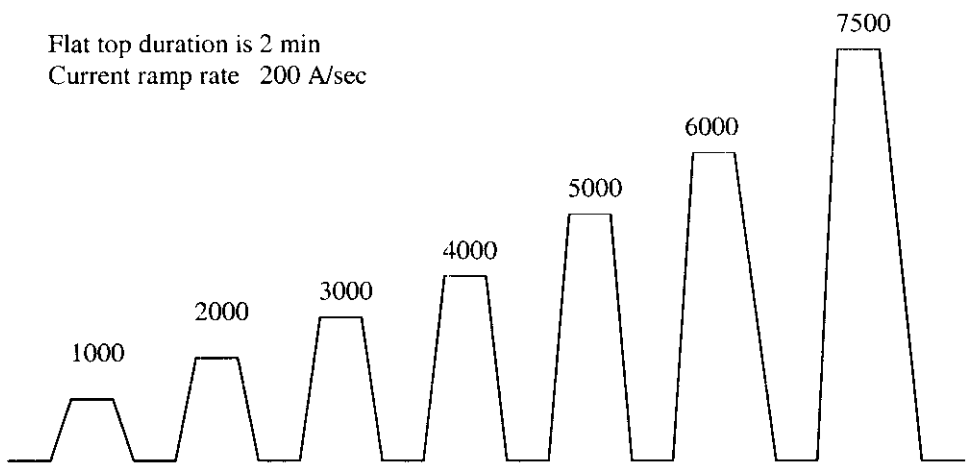

16. Cold test of the power leads

Profile 2:

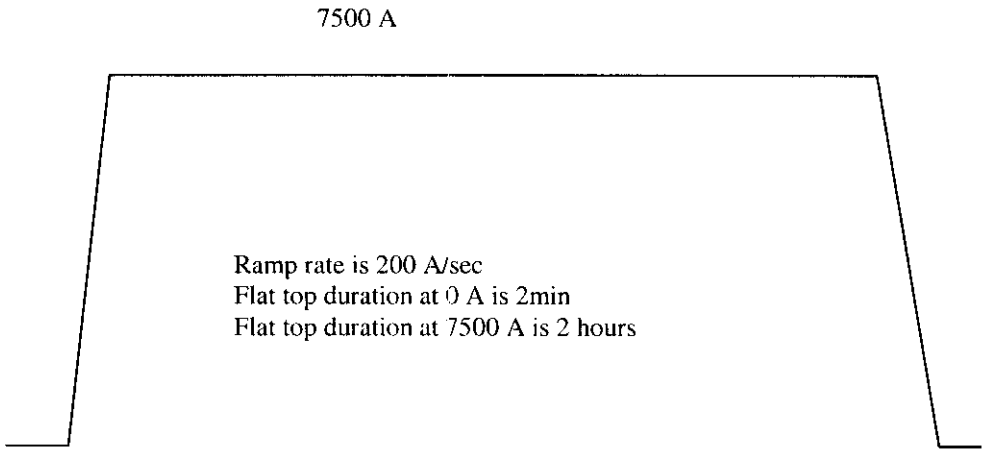

16. Cold test of the power leads

Performed by ROGER RABEHL (name typed) Roger Rabehl (signature)

Date & time OCTOBER 15, 2003 0930

Power Lead 7500 A DFLX -29 & 7500 A DFLX 31

✓ 16.0 Set the DAQ system ScribeLeads and ScribeFix32 Data Logging Intervals to capture data every 5 seconds.

✓ 16.1. Establish cryogenic parameters for normal high current operating conditions.
Set the liquid level at 6in location using the 1 foot LL probe ✓
Set the copper section inlet cooling gas temperature to 15-20K range ✓
Set the LHe vapor cooling control loop in automatic mode to keep the upper HTS terminal temperature at 45 K for ½ hour ✓
Neg. lead flow rate 0.141 g/s Pos. lead flow rate 0.151 g/s
Neg. lead diff. pressure 0 mbar Pos. lead diff. pressure 0 mbar
Set the upper HTS temperature to 50 K and keep it there for ½ hour ✓
Neg. lead flow rate 0.122 g/s Pos. lead flow rate 0.134 g/s
Neg. lead diff. pressure 0 mbar Pos. lead diff. pressure 0 mbar
Frost observed on leads? (Y/N) N

✓ 16.1.1 Set software quench detection thresholds by executing:
/usr/vmtf/sh/lhchts_setquenchthreshold_run.sh

✓ 16.2 Stair step profile test.
Turn on the Power Supply. Set HTS terminal temperature to 50K and apply current profile 1 (/usr/vmtf/sh/hmtf3_run_prf.sh) ✓
Monitor voltages and make sure that the data is recorded.
Run data analysis tool on the obtained data file to determine joint resistances.

7500 A DFLX -29 R(joint between V2 & V3) = $\frac{0.000124 + 0.000168\ V}{7500\ A} = 38.9\ n\Omega$
R(joint between V3 & V4) = $\frac{0.000240 - 0.000223\ V}{7500\ A} = 2.3\ n\Omega$

7500 A DFLX 31 R(joint between V2 & V3) = $\frac{0.000360 - 0.000266\ V}{7500\ A} = 39.2\ n\Omega$
R(joint between V3 & V4) = $\frac{0.000335 - 0.000308\ V}{7500\ A} = 3.6\ n\Omega$

✓ 16.3 Coolant loss test.
Apply 7500 A and
a) Close the coolant flow for 7500 A DFLX -29
Wait until QD detects the quench and record
T1 = 81 K ; T2 = 298 K; V12 = -0.098 V; V23 = -0.90 mV; V34 = 0.23 mV ;

T1 is the HTS warm terminal temp., TI509-3 (neg. lead) or TI510-3 (pos. lead).
T2 is the upper copper temp., TI511-3 (neg. lead) or TI512-3 (pos. lead).

16. Cold test of the power leads

b) Re-establish operating conditions

c) Close the coolant flow for 7500 A DFLX 31

Wait until QD detects the quench and record

T1 = 82 K ; T2 = 306 K; V12 = 0.101 V ; V23 = 1.13 mV; V34 = 0.33 mV;

✓ 16.4a Set the upper HTS terminal temperature to 45 K and apply current profile 2.

Neg. lead flow rate 0.456 g/s Pos. lead flow rate 0.456 g/s

Neg. lead diff. pressure 2.9 mbar Pos. lead diff. pressure 4.8 mbar

✓ 16.4b Set HTS terminal temp to 50 K and apply current profile 2.

Neg. lead flow rate 0.430 g/s Pos. lead flow rate 0.432 g/s

Neg. lead diff. pressure 2.5 mbar Pos. lead diff. pressure 4.5 mbar

✓ 16.5 When test is completed, set the ScribeLeads and ScribeFix32 Data Logging Intervals to 300 seconds.

Note: If any irregularity occur call Sandor.

Profile 1:

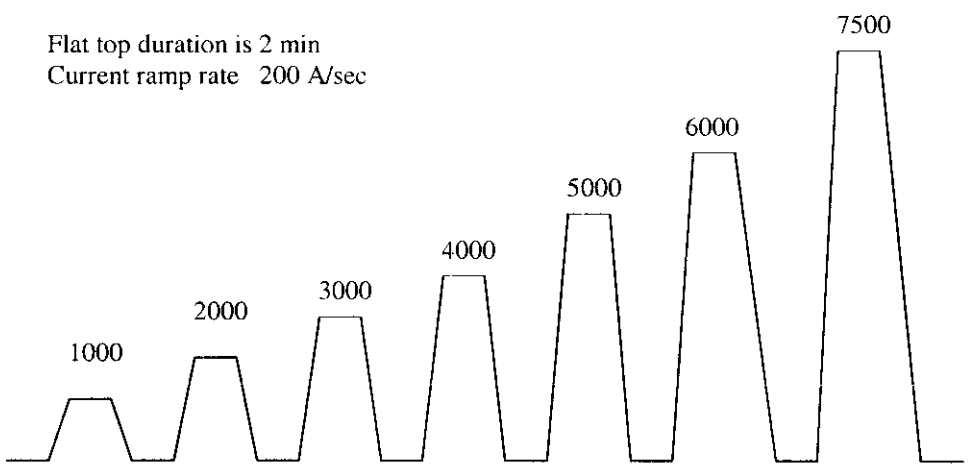

16. Cold test of the power leads

Profile 2:

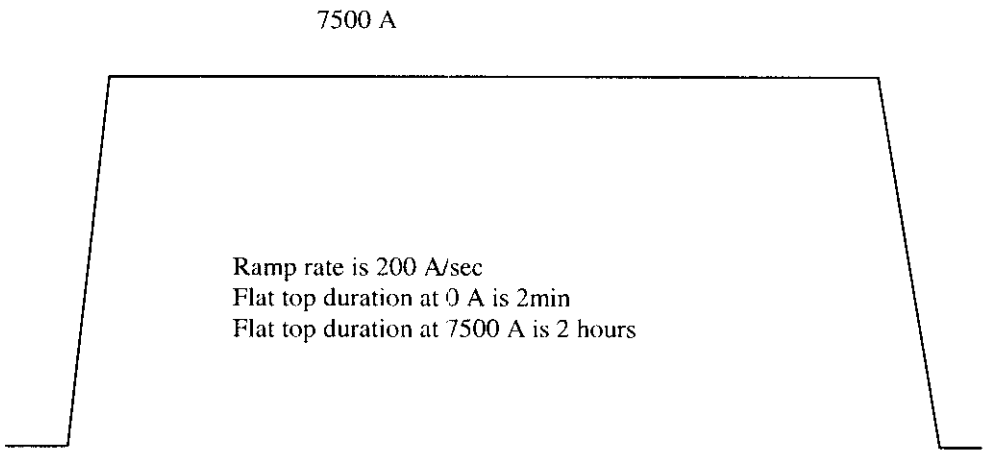

FERMILAB Technical Division	7500A HTS Power leads for the LHC DFBX	Doc. No. Rev. No. Date: March 5,2003 Page 1 of 1 Author: Dan Eddy
	20. Warm Temp Hi-pot In Gasous He Environment	

Note: Save the shipping container for storing and moving the leads around TD and after the test is complete to ship them to the DFBX manufacturer.

Performed by Dan W
(Name typed) (Signature)

Date & time 10/16/03

Pos. Power Lead 7500 A DFLX 31 and Neg. Power Lead 7500 A DFLX 29

This hi-pot should be performed after dewar has been filled with gaseous helium after the second test cycle has been completed and the dewar is at room temperature. When checkout is complete, make sure you place the original and a copy of this document in the Traveler Binders.

1.1 Short all of the temperature sensors together using the special RTD high pot cable. High pot each set of temperature sensor to 300v with respect to the Lead (ground).

Record breakdown voltage (if any) — V.
Record current .02 in A

1.2 Hi-pot the leads in a cold (4.5K) He environment to 1500V (1.3 Bar) using a Droege HV power supply. Connect the positive clip to one lead and the negative clip to ground. Also, short all of the temperature sensors together using the special RTD high pot cable. Connect the ring terminal from each connector to the flag of each lead. **Be sure to disconnect the redundant voltage taps on both leads and the power connections from Kepco power supply.**

Record breakdown voltage (if any) — V.
Record current .1 in A.
Record approximate temp. _____K.
Record approximate test dewar pressure _____PSIA.

NOTE: Reconnect Vtaps and RTDs when finished.

LHC HTS POWER LEAD TESTING @ TEST STAND 3
PAIR - DFLX-29 (-) & DFLX-31 (+)

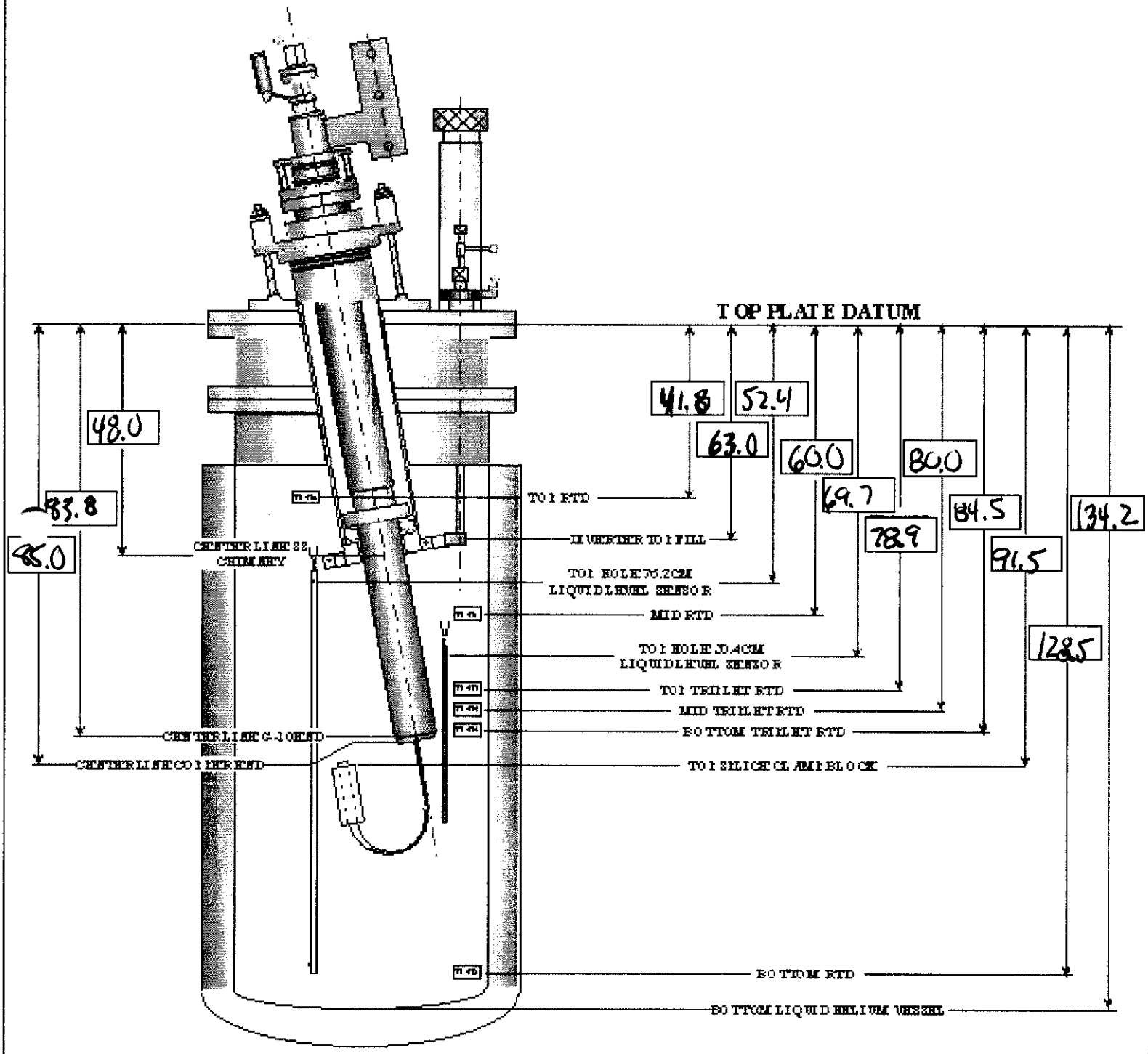

SUBJECT	LHC HTS POWER LEADS (-) DFLX-29 & (+) DFLX-31	TITLE	POWER LEAD TEST DIMENSION MAP	DATE

FERMILAB
Technical Division

Stand 3 LHC-HTS Lead Testing:
23. Pack and Ship the Leads

Lead Pair
Negative Lead: 29
Positive Lead: 31

Signed C.E. Hess Date 10.20.03

1. **Pack the Leads**

1.1 With the lead on the steel table, swing the insertion/lifting tool 180° so that the lead can be picked up and remain horizontal as shown in Figure 1.1.

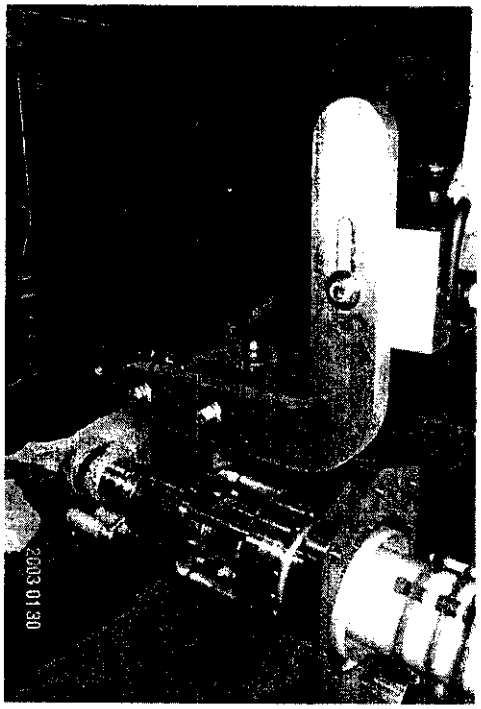

Figure 1.1 Orientation of the insertion/lifting tool to allow the power lead to be held horizontally.

1.2 Lift the power lead off of the steel table.

1.3 While supporting the lead from the crane, remove the end support clamped around the lower flange of the power lead.

1.4 Complete the lead preparation checklist:

✓ ✓ **a)** Install the protective covers for the lead top plate knife edge sealing surface and for the lower flange sealing surface on each lead. Secure them with tape.

✓ ✓ **b)** Insert a protective plastic cap into the 4-20 K gas port for each lead.

✓ ✓ **c)** Reattach the g-force indicators that were attached to the leads when they arrived.

✓ ✓ **d)** Wrap the ceramic insulator at the top of each lead in bubble wrap.

✓ ✓ **e)** Place a cap on the Conflat flange at the top of each lead.

Negative Lead DFLX 29 Positive Lead DFLX 31

✓ ✓ **f)** Wrap the power lead vacuum pumpout in aluminum foil.

✓ ✓ **g)** Secure the power lead bus and voltage tap wires to the power lead lower G-10 section with tape.

✓ ✓ **h)** Set each lead in the shipping crate and remove the insertion/lifting tool.

1.5 Complete the packing checklist:

✓ **a)** Reinstall the wooden supports in the crate to hold the lead in place during shipping.

✓ **b)** Make two photocopies of all documents in the lead travelers, and place the power lead travelers in the shipping crate. One copy of the documents is for Sandor, the second copy is for Marsha Schmidt.

✓ **c)** Verify the following items are in the shipping crate:

- ✓ **i)** Two flag heaters
- ✓ **ii)** Two flag heater connectors
- ✓ **iii)** Vacuum pumpout actuator
- ✓ **iv)** NW16 clamp
- ✓ **v)** NW16 o-ring

1.6 Close the shipping crate

2. Ship the Leads

2.1 Complete the shipping checklist:

✓ **a)** Call Marsha Schmidt (X-4377) to request that the power leads be shipped to storage.

Negative Lead DFLX 29 Positive Lead DFLX 31