HTS Leads Installation Reports

Box "F"

FERMILAB
Technical Division

Installation of the LHC HTS Current Leads

Lead: DFLX 28

Signed Wayne E. John Date 3-14-05

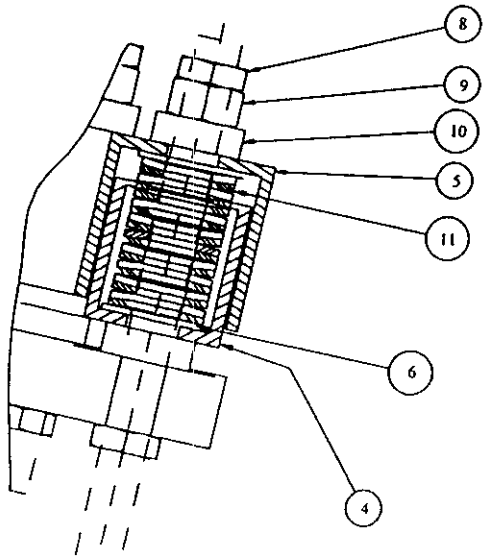

Figure 1.31b An installed Belleville washer assembly.

1.29 Tighten the 6 Belleville washer assemblies to apply load to the PEEK seal.

1.29.1 Back down the tensioning rod nuts used in Step 1.25 so they are about 5 mm below the power lead flange.

1.29.2 Tighten the 6 loading nuts finger-tight. With adjustable parallels, measure and record the gap 'y' indicated in Figure 1.31a between Item 5 (Belleville washer holder upper half) and the power lead top flange at the 6 locations specified in Figure 1.32.2. Units are mm.

A 15.51 B 15.66 C 16.21 D 15.78 E 15.97 F 15.60

1.29.3 For each of the six studs: remove the adjustable parallel, adjust it for 1.8 mm of compression, and return the adjustable parallel into position under the Belleville washer holder. Record the adjusted heights of the adjustable parallels. Units are mm.

A 13.71 B 13.86 C 14.41 D 13.98 E 14.17 F 13.80

1.29.4 Using the sequence A through F in Figure 1.32.2, sequentially tighten the loading nuts ¼ turn until the total compression is 1.8 mm at each of the six locations. As each loading nut is tightened ¼ turn, check off the appropriate line.

A ✓ B ✓ C ✓ D ✓ E ✓ F ✓

A ✓ B ✓ C ✓ D ✓ E ✓ F ✓

A ✓ B ✓ C ✓ D ✓ E ✓ F ✓

A ✓ B ✓ C ✓ D ✓ E ✓ F ✓

A ✓ B ✓ C ✓ D ✓ E ✓ F ✓

A ✓ B ✓ C ____ D ✓ E ✓ F ✓

A ✓ B ____ C ✓ D ____ E ____ F ✓

A ____ B ____ C ____ D ____ E ____ F ____

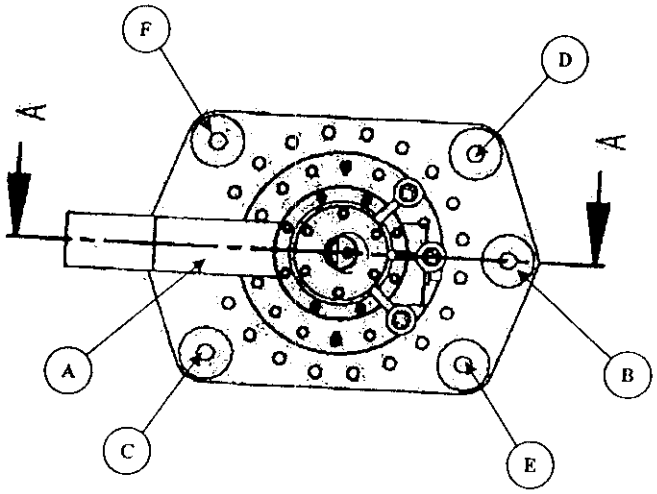

Figure 1.32.2 The specified sequence for tightening the Belleville washer assemblies.

1.29.5 Remove the adjustable parallels from under each Belleville washer assembly, then replace them and measure the final gaps 'y' in Figure 1.31a. Units are mm.

A 13.78 B 14.21 C 14.63 D 14.24 E 14.44 F 13.57

1.29.6 Attach a Conflat flange with a pressure gauge and a fill valve to the gas outlet port. Pressurize to 10 psig. The seal is acceptable if the pressure loss is less than 1 psi after 2 minutes.

1.30 Reduce compression of Belleville washer assemblies.

1.30.1 Remove the Teflon centering ring from the installed power lead.

1.30.2 Back off the loading nuts sequentially to reduce the Belleville compression to 0.75 mm (0.030 in).

1.31 Tighten down the jam nuts to secure the loading nuts on the installed Belleville washer assemblies.

F Box

FERMILAB
Technical Division

Installation of the LHC HTS Current Leads

Lead: DFLX 28

Signed Mike Jenimyan Date 5/23/05

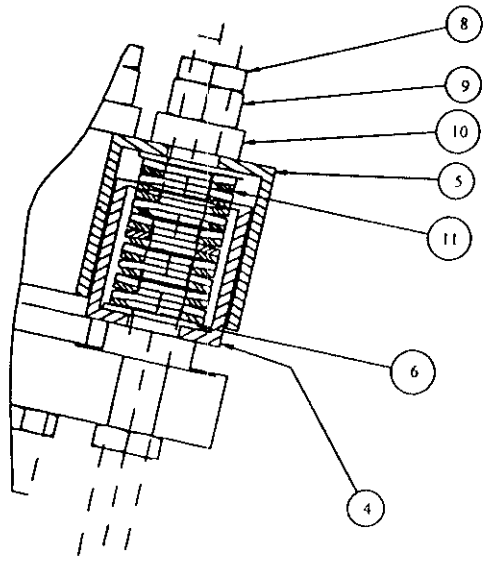

Figure 1.31b An installed Belleville washer assembly.

1.29 Tighten the 6 Belleville washer assemblies to apply load to the PEEK seal.

1.29.1 Back down the tensioning rod nuts used in Step 1.25 so they are about 5 mm below the power lead flange.

1.29.2 Tighten the 6 loading nuts finger-tight. With adjustable parallels, measure and record the gap 'y' indicated in Figure 1.31a between Item 5 (Belleville washer holder upper half) and the power lead top flange at the 6 locations specified in Figure 1.32.2. Units are mm.

A 15.37 B 15.52 C 15.90 D 15.84 E 15.52 F 15.53

1.29.3 For each of the six studs: remove the adjustable parallel, adjust it for 1.8 mm of compression, and return the adjustable parallel into position under the Belleville washer holder. Record the adjusted heights of the adjustable parallels. Units are mm.

A 13.57 B 13.72 C 14.10 D 14.04 E 13.72 F 13.73

1.29.4 Using the sequence A through F in Figure 1.32.2, sequentially tighten the loading nuts ¼ turn until the total compression is 1.8 mm at each of the six locations. As each loading nut is tightened ¼ turn, check off the appropriate line.

A ✓ B ✓ C ✓ D ✓ E ✓ F ✓

A ✓ B ✓ C ✓ D ✓ E ✓ F ✓

A ✓ B ✓ C ✓ D ✓ E ✓ F ✓

A ✓ B ✓ C ✓ D ✓ E ✓ F ✓

A ✓ B ✓ C ✓ D ✓ E ✓ F ✓

A ✓ B ✓ C ✓ D ✓ E ✓ F ✓

A ____ B ____ C ____ D ____ E ____ F ____

A ____ B ____ C ____ D ____ E ____ F ____

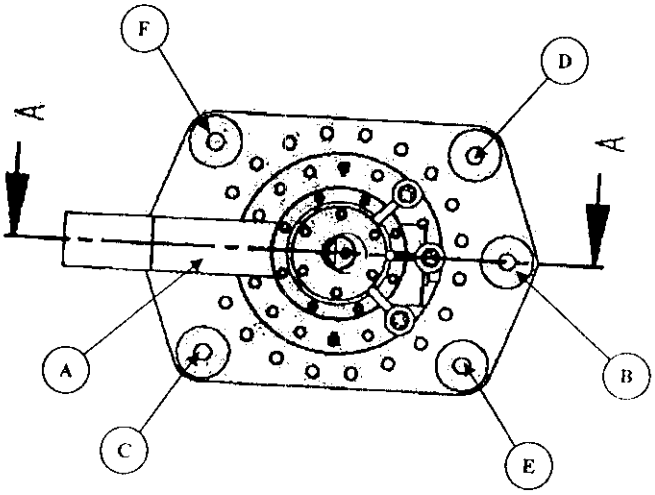

Figure 1.32.2 The specified sequence for tightening the Belleville washer assemblies.

1.29.5 Remove the adjustable parallels from under each Belleville washer assembly, then replace them and measure the final gaps 'y' in Figure 1.31a. Units are mm.

A 13.51 B 13.74 C 14.09 D 14.02 E 13.72 F 13.71

1.29.6 Attach a Conflat flange with a pressure gauge and a fill valve to the gas outlet port. Pressurize to 10 psig. The seal is acceptable if the pressure loss is less than 1 psi after 2 minutes.

1.30 Reduce compression of Belleville washer assemblies.

1.30.1 Remove the Teflon centering ring from the installed power lead.

1.30.2 Back off the loading nuts sequentially to reduce the Belleville compression to 0.75 mm (0.030 in).

1.31 Tighten down the jam nuts to secure the loading nuts on the installed Belleville washer assemblies.

Box "F"

FERMILAB
Technical Division

Installation of the LHC HTS Current Leads

Lead: DFLX 29

Signed Wayne E. Johnson Date 3-14-05

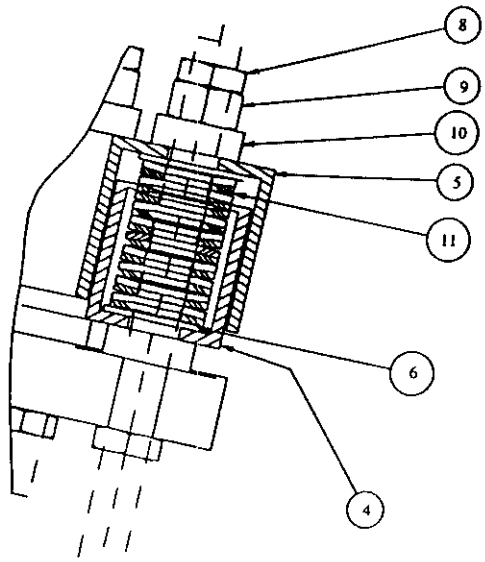

Figure 1.31b An installed Belleville washer assembly.

1.29 Tighten the 6 Belleville washer assemblies to apply load to the PEEK seal.

1.29.1 Back down the tensioning rod nuts used in Step 1.25 so they are about 5 mm below the power lead flange.

1.29.2 Tighten the 6 loading nuts finger-tight. With adjustable parallels, measure and record the gap 'y' indicated in Figure 1.31a between Item 5 (Belleville washer holder upper half) and the power lead top flange at the 6 locations specified in Figure 1.32.2. Units are mm.

A 15.98 B 16.08 C 15.74 D 15.47 E 15.99 F 16.19

1.29.3 For each of the six studs: remove the adjustable parallel, adjust it for 1.8 mm of compression, and return the adjustable parallel into position under the Belleville washer holder. Record the adjusted heights of the adjustable parallels. Units are mm.

A 14.18 B 14.28 C 13.94 D 13.67 E 14.19 F 14.39

1.29.4 Using the sequence A through F in Figure 1.32.2, sequentially tighten the loading nuts ¼ turn until the total compression is 1.8 mm at each of the six locations. As each loading nut is tightened ¼ turn, check off the appropriate line.

A ✓ B ✓ C ✓ D ✓ E ✓ F ✓

A ✓ B ✓ C ✓ D ✓ E ✓ F ✓

A ✓ B ✓ C ✓ D ✓ E ✓ F ✓

A ✓ B ✓ C ✓ D ✓ E ✓ F ✓

A ✓ B ✓ C ✓ D ✓ E ✓ F ✓

A ✓ B ✓ C ✓ D ____ E ✓ F ✓

A ✓ B ____ C ✓ D ____ E ____ F ____

A ____ B ____ C ____ D ____ E ____ F ____

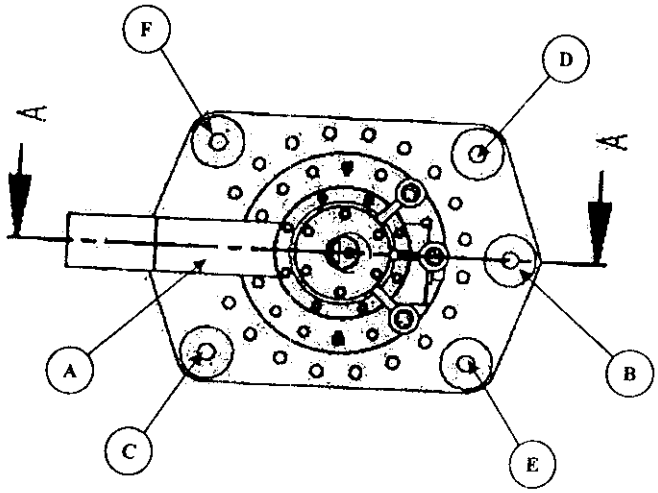

Figure 1.32.2 The specified sequence for tightening the Belleville washer assemblies.

1.29.5 Remove the adjustable parallels from under each Belleville washer assembly, then replace them and measure the final gaps 'y' in Figure 1.31a. Units are mm.

A 13.83 B 14.46 C 14.29 D 14.23 E 14.18 F 14.47

1.29.6 Attach a Conflat flange with a pressure gauge and a fill valve to the gas outlet port. Pressurize to 10 psig. The seal is acceptable if the pressure loss is less than 1 psi after 2 minutes.

1.30 Reduce compression of Belleville washer assemblies.

1.30.1 Remove the Teflon centering ring from the installed power lead.

1.30.2 Back off the loading nuts sequentially to reduce the Belleville compression to 0.75 mm (0.030 in).

1.31 Tighten down the jam nuts to secure the loading nuts on the installed Belleville washer assemblies.

F Box

FERMILAB
Technical Division

Installation of the LHC HTS Current Leads

Lead: DFLX 29

Signed Mike Penza Date 5/23/05

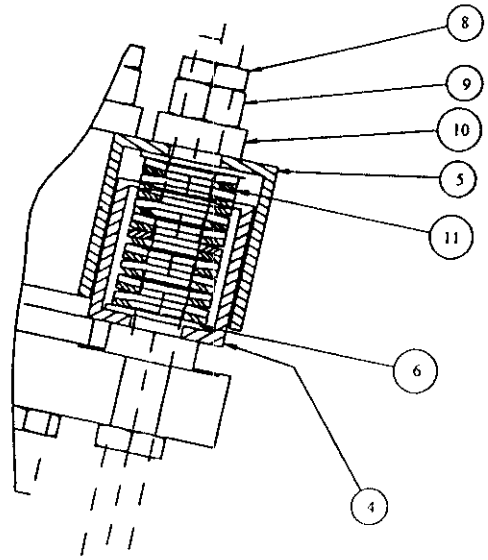

Figure 1.31b An installed Belleville washer assembly.

1.29 Tighten the 6 Belleville washer assemblies to apply load to the PEEK seal.

1.29.1 Back down the tensioning rod nuts used in Step 1.25 so they are about 5 mm below the power lead flange.

1.29.2 Tighten the 6 loading nuts finger-tight. With adjustable parallels, measure and record the gap 'y' indicated in Figure 1.31a between Item 5 (Belleville washer holder upper half) and the power lead top flange at the 6 locations specified in Figure 1.32.2. Units are mm.

A 15.93 B 15.68 C 15.45 D 15.57 E 15.75 F 15.98

1.29.3 For each of the six studs: remove the adjustable parallel, adjust it for 1.8 mm of compression, and return the adjustable parallel into position under the Belleville washer holder. Record the adjusted heights of the adjustable parallels. Units are mm.

A 14.13 B 13.88 C 13.65 D 13.77 E 13.95 F 14.18

1.29.4 Using the sequence A through F in Figure 1.32.2, sequentially tighten the loading nuts ¼ turn until the total compression is 1.8 mm at each of the six locations. As each loading nut is tightened ¼ turn, check off the appropriate line.

A ✓ B ✓ C ✓ D ✓ E ✓ F ✓

A ✓ B ✓ C ✓ D ✓ E ✓ F ✓

A ✓ B ✓ C ✓ D ✓ E ✓ F ✓

A ✓ B ✓ C ✓ D ✓ E ✓ F ✓

A ✓ B ✓ C ✓ D ✓ E ✓ F ✓

A ✓ B ✓ C ✓ D ✓ E ✓ F ✓

A ✓ B ✓ C ✓ D ✓ E ✓ F ✓

A ____ B ____ C ____ D ____ E ____ F ____

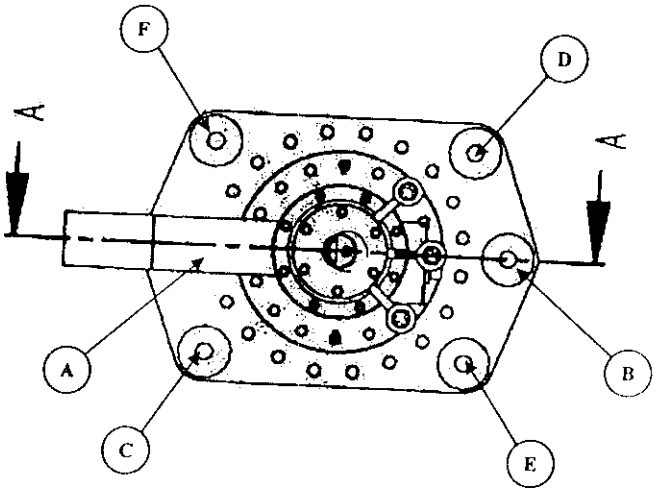

Figure 1.32.2 The specified sequence for tightening the Belleville washer assemblies.

1.29.5 Remove the adjustable parallels from under each Belleville washer assembly, then replace them and measure the final gaps 'y' in Figure 1.31a. Units are mm.

A 14.14 B 13.86 C 13.53 D 13.77 E 13.93 F 14.05

1.29.6 Attach a Conflat flange with a pressure gauge and a fill valve to the gas outlet port. Pressurize to 10 psig. The seal is acceptable if the pressure loss is less than 1 psi after 2 minutes.

1.30 Reduce compression of Belleville washer assemblies.

1.30.1 Remove the Teflon centering ring from the installed power lead.

1.30.2 Back off the loading nuts sequentially to reduce the Belleville compression to 0.75 mm (0.030 in).

1.31 Tighten down the jam nuts to secure the loading nuts on the installed Belleville washer assemblies.

Box "F"

FERMILAB
Technical Division

Installation of the LHC HTS Current Leads

Lead: DFLX 31

Signed Wayne E. John Date 3-14-05

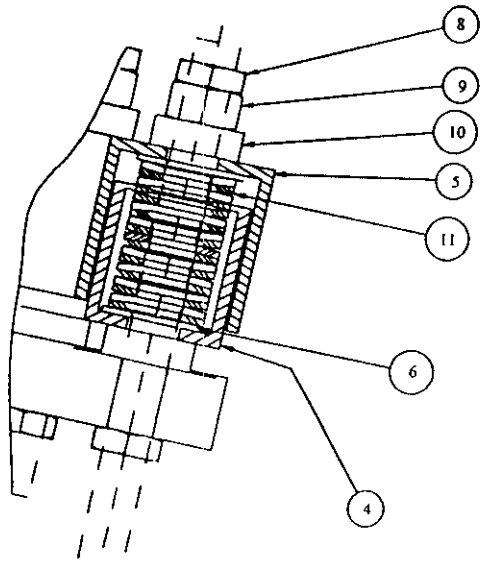

Figure 1.31b An installed Belleville washer assembly.

1.29 Tighten the 6 Belleville washer assemblies to apply load to the PEEK seal.

1.29.1 Back down the tensioning rod nuts used in Step 1.25 so they are about 5 mm below the power lead flange.

1.29.2 Tighten the 6 loading nuts finger-tight. With adjustable parallels, measure and record the gap 'y' indicated in Figure 1.31a between Item 5 (Belleville washer holder upper half) and the power lead top flange at the 6 locations specified in Figure 1.32.2. Units are mm.

A 15.73 B 15.93 C 15.39 D 15.50 E 16.01 F 15.41

1.29.3 For each of the six studs: remove the adjustable parallel, adjust it for 1.8 mm of compression, and return the adjustable parallel into position under the Belleville washer holder. Record the adjusted heights of the adjustable parallels. Units are mm.

A 13.93 B 14.13 C 13.59 D 13.70 E 14.21 F 13.61

1.29.4 Using the sequence A through F in Figure 1.32.2, sequentially tighten the loading nuts ¼ turn until the total compression is 1.8 mm at each of the six locations. As each loading nut is tightened ¼ turn, check off the appropriate line.

A ✓ B ✓ C ✓ D ✓ E ✓ F ✓

A ✓ B ✓ C ✓ D ✓ E ✓ F ✓

A ✓ B ✓ C ✓ D ✓ E ✓ F ✓

A ✓ B ✓ C ✓ D ✓ E ✓ F ✓

A ✓ B ___ C ✓ D ✓ E ___ F ✓

A ✓ B ___ C ✓ D ✓ E ___ F ✓

A ✓ B ___ C ✓ D ___ E ___ F ✓

A ✓ B ___ C ✓ D ___ E ___ F ✓

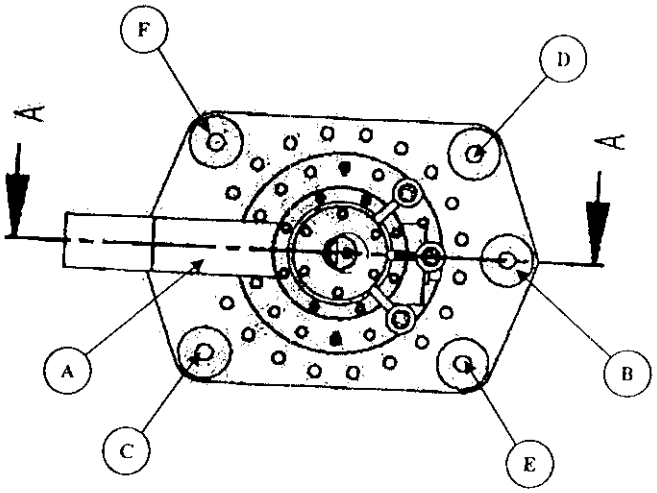

Figure 1.32.2 The specified sequence for tightening the Belleville washer assemblies.

1.29.5 Remove the adjustable parallels from under each Belleville washer assembly, then replace them and measure the final gaps 'y' in Figure 1.31a. Units are mm.

A 13.93 B 14.21 C 13.56 D 13.61 E 14.55 F 13.19

1.29.6 Attach a Conflat flange with a pressure gauge and a fill valve to the gas outlet port. Pressurize to 10 psig. The seal is acceptable if the pressure loss is less than 1 psi after 2 minutes.

1.30 Reduce compression of Belleville washer assemblies.

1.30.1 Remove the Teflon centering ring from the installed power lead.

1.30.2 Back off the loading nuts sequentially to reduce the Belleville compression to 0.75 mm (0.030 in).

1.31 Tighten down the jam nuts to secure the loading nuts on the installed Belleville washer assemblies.

F Box

FERMILAB
Technical Division

Installation of the LHC HTS Current Leads

Lead: DFLX 31

Signed Mike Penniga Date 5/23/05

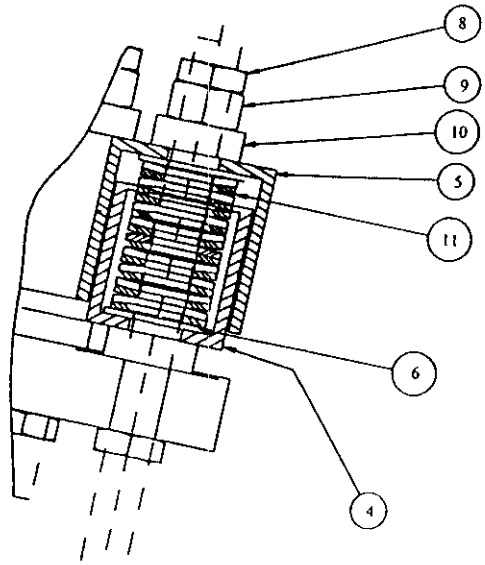

Figure 1.31b An installed Belleville washer assembly.

1.29 Tighten the 6 Belleville washer assemblies to apply load to the PEEK seal.

1.29.1 Back down the tensioning rod nuts used in Step 1.25 so they are about 5 mm below the power lead flange.

1.29.2 Tighten the 6 loading nuts finger-tight. With adjustable parallels, measure and record the gap 'y' indicated in Figure 1.31a between Item 5 (Belleville washer holder upper half) and the power lead top flange at the 6 locations specified in Figure 1.32.2. Units are mm.

A 15.66 B 15.35 C 15.28 D 15.51 E 15.92 F 15.87

1.29.3 For each of the six studs: remove the adjustable parallel, adjust it for 1.8 mm of compression, and return the adjustable parallel into position under the Belleville washer holder. Record the adjusted heights of the adjustable parallels. Units are mm.

A 13.86 B 13.55 C 13.48 D 13.71 E 14.12 F 14.07

1.29.4 Using the sequence A through F in Figure 1.32.2, sequentially tighten the loading nuts ¼ turn until the total compression is 1.8 mm at each of the six locations. As each loading nut is tightened ¼ turn, check off the appropriate line.

A ✓ B ✓ C ✓ D ✓ E ✓ F ✓

A ✓ B ✓ C ✓ D ✓ E ✓ F ✓

A ✓ B ✓ C ✓ D ✓ E ✓ F ✓

A ✓ B ✓ C ✓ D ✓ E ✓ F ✓

A ✓ B ✓ C ✓ D ✓ E ✓ F ✓

A ✓ B ✓ C ✓ D ✓ E ____ F ✓

A ____ B ____ C ____ D ____ E ____ F ____

A ____ B ____ C ____ D ____ E ____ F ____

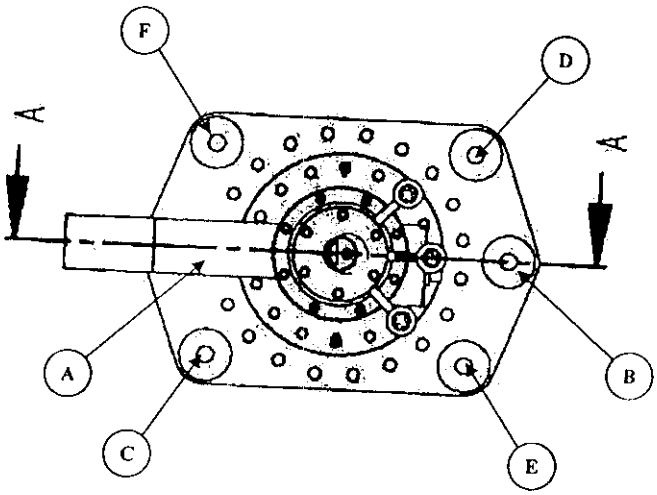

Figure 1.32.2 The specified sequence for tightening the Belleville washer assemblies.

1.29.5 Remove the adjustable parallels from under each Belleville washer assembly, then replace them and measure the final gaps 'y' in Figure 1.31a. Units are mm.

A 13.76 B 13.57 C 13.43 D 13.71 E 14.14 F 14.06

1.29.6 Attach a Conflat flange with a pressure gauge and a fill valve to the gas outlet port. Pressurize to 10 psig. The seal is acceptable if the pressure loss is less than 1 psi after 2 minutes.

1.30 Reduce compression of Belleville washer assemblies.

1.30.1 Remove the Teflon centering ring from the installed power lead.

1.30.2 Back off the loading nuts sequentially to reduce the Belleville compression to 0.75 mm (0.030 in).

1.31 Tighten down the jam nuts to secure the loading nuts on the installed Belleville washer assemblies.

FERMILAB
Technical Division

Installation of the LHC HTS Current Leads

Lead: DFLX 32

Signed Wayne E. John Date 3-16-05

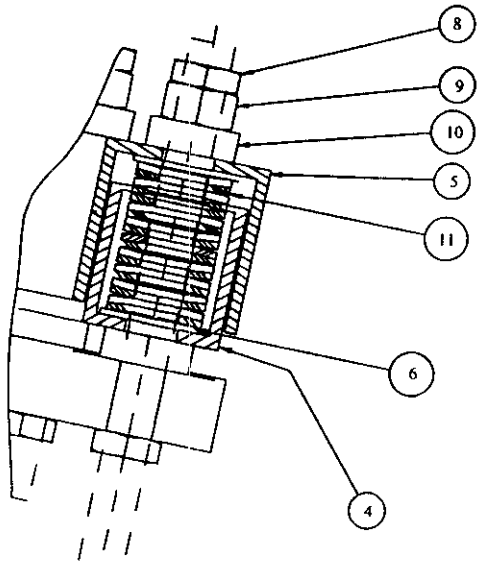

Figure 1.31b An installed Belleville washer assembly.

1.29 Tighten the 6 Belleville washer assemblies to apply load to the PEEK seal.

1.29.1 Back down the tensioning rod nuts used in Step 1.25 so they are about 5 mm below the power lead flange.

1.29.2 Tighten the 6 loading nuts finger-tight. With adjustable parallels, measure and record the gap 'y' indicated in Figure 1.31a between Item 5 (Belleville washer holder upper half) and the power lead top flange at the 6 locations specified in Figure 1.32.2. Units are mm.

A 15.37 B 16.27 C 16.16 D 15.71 E 16.50 F 16.07

1.29.3 For each of the six studs: remove the adjustable parallel, adjust it for 1.8 mm of compression, and return the adjustable parallel into position under the Belleville washer holder. Record the adjusted heights of the adjustable parallels. Units are mm.

A 13.57 B 14.47 C 14.36 D 13.91 E 14.70 F 14.27

1.29.4 Using the sequence A through F in Figure 1.32.2, sequentially tighten the loading nuts ¼ turn until the total compression is 1.8 mm at each of the six locations. As each loading nut is tightened ¼ turn, check off the appropriate line.

A ✓ B ✓ C ✓ D ✓ E ✓ F ✓

A ✓ B ✓ C ✓ D ✓ E ✓ F ✓

A ✓ B ✓ C ✓ D ✓ E ✓ F ✓

A ✓ B ✓ C ✓ D ✓ E ✓ F ✓

A ✓ B ___ C ___ D ✓ E ✓ F ___

A ✓ B ___ C ___ D ✓ E ___ F ___

A ___ B ___ C ___ D ___ E ___ F ___

A ___ B ___ C ___ D ___ E ___ F ___

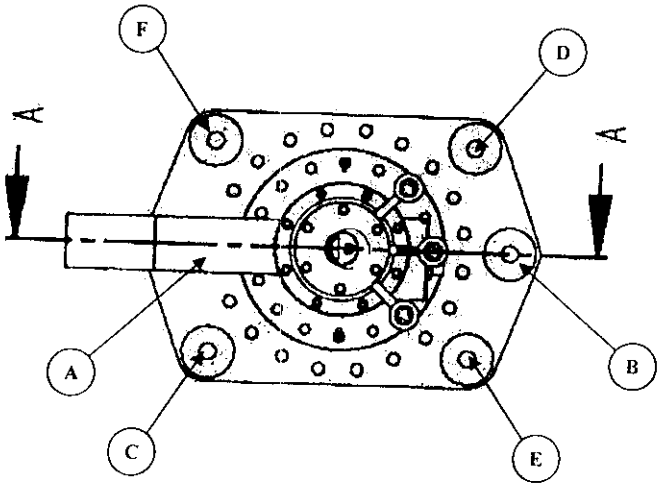

Figure 1.32.2 The specified sequence for tightening the Belleville washer assemblies.

1.29.5 Remove the adjustable parallels from under each Belleville washer assembly, then replace them and measure the final gaps 'y' in Figure 1.31a. Units are mm.

A 13.43 B 14.26 C 14.29 D 13.69 E 14.65 F 14.43

1.29.6 Attach a Conflat flange with a pressure gauge and a fill valve to the gas outlet port. Pressurize to 10 psig. The seal is acceptable if the pressure loss is less than 1 psi after 2 minutes.

1.30 Reduce compression of Belleville washer assemblies.

1.30.1 Remove the Teflon centering ring from the installed power lead.

1.30.2 Back off the loading nuts sequentially to reduce the Belleville compression to 0.75 mm (0.030 in).

1.31 Tighten down the jam nuts to secure the loading nuts on the installed Belleville washer assemblies.

F Box

FERMILAB
Technical Division

Installation of the LHC HTS Current Leads

Lead: DFLX 32

Signed Mike Jennings Date 5/23/05

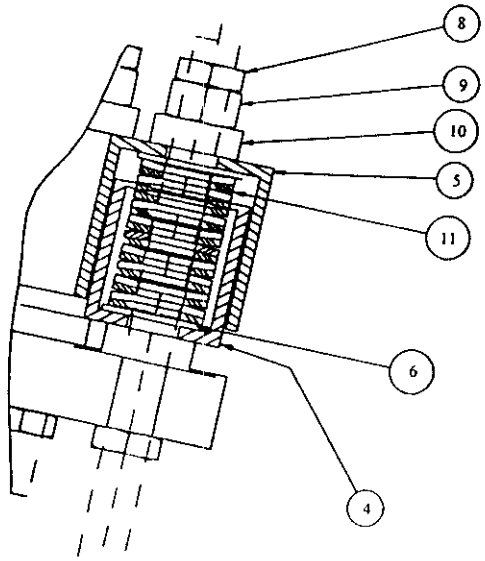

Figure 1.31b An installed Belleville washer assembly.

1.29 Tighten the 6 Belleville washer assemblies to apply load to the PEEK seal.

1.29.1 Back down the tensioning rod nuts used in Step 1.25 so they are about 5 mm below the power lead flange.

1.29.2 Tighten the 6 loading nuts finger-tight. With adjustable parallels, measure and record the gap 'y' indicated in Figure 1.31a between Item 5 (Belleville washer holder upper half) and the power lead top flange at the 6 locations specified in Figure 1.32.2. Units are mm.

A 15.40 B 15.45 C 15.57 D 15.60 E 15.84 F 15.38

1.29.3 For each of the six studs: remove the adjustable parallel, adjust it for 1.8 mm of compression, and return the adjustable parallel into position under the Belleville washer holder. Record the adjusted heights of the adjustable parallels. Units are mm.

A 14.10 B 14.15 C 13.77 D 13.80 E 14.09 F 13.58

1.29.4 Using the sequence A through F in Figure 1.32.2, sequentially tighten the loading nuts ¼ turn until the total compression is 1.8 mm at each of the six locations. As each loading nut is tightened ¼ turn, check off the appropriate line.

A ✓ B ✓ C ✓ D ✓ E ✓ F ✓

A ✓ B ✓ C ✓ D ✓ E ✓ F ✓

A ✓ B ✓ C ✓ D ✓ E ✓ F ✓

A ✓ B ✓ C ✓ D ✓ E ✓ F ✓

A ✓ B ✓ C ✓ D ✓ E ✓ F ✓

A ✓ B ✓ C ✓ D ✓ E ✓ F ✓

A ✓ B ✓ C ✓ D ✓ E ✓ F ✓

A ____ B ____ C ____ D ____ E ____ F ____

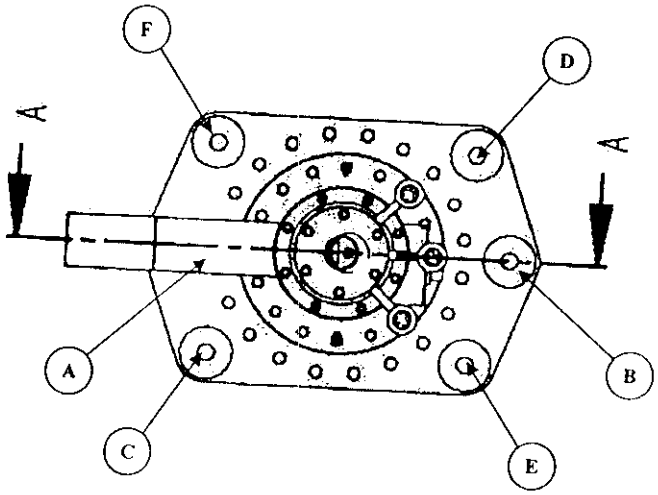

Figure 1.32.2 The specified sequence for tightening the Belleville washer assemblies.

1.29.5 Remove the adjustable parallels from under each Belleville washer assembly, then replace them and measure the final gaps 'y' in Figure 1.31a. Units are mm.

A 14.10 B 14.14 C 13.78 D 13.82 E 14.07 F 13.57

1.29.6 Attach a Conflat flange with a pressure gauge and a fill valve to the gas outlet port. Pressurize to 10 psig. The seal is acceptable if the pressure loss is less than 1 psi after 2 minutes.

1.30 Reduce compression of Belleville washer assemblies.

1.30.1 Remove the Teflon centering ring from the installed power lead.

1.30.2 Back off the loading nuts sequentially to reduce the Belleville compression to 0.75 mm (0.030 in).

1.31 Tighten down the jam nuts to secure the loading nuts on the installed Belleville washer assemblies.

Meyer Tool & Mfg., Inc.

4601 W. Southwest Hwy., Oak Lawn, Illinois 60453
708 / 425-9080
Fax 708 / 425-2612

CONTINUITY TESTING
MTM-MP-1020

Box "F" LQX
(Main Magnet Voltage Taps External Wiring)

Function Designator, Tag Or Description		Resistance ohms	Assembly Step	By Date
HARTING P40 CONNECTOR	CERAMSEAL PLUG		FINAL	01/27/05
#1 TO	A-3	0.003		SC
#2 TO	A-4	0.003		
#3 TO	B-6	0.003		
#4 TO	C-6	0.003		
#5 TO	D-3	0.003		
#6 TO	D-4	0.003		
HARTING D40 CONNECTOR	CERAMSEAL PLUG			
#1 TO	A-1	0.003		
#2 TO	A-2	0.004		
#3 TO	A-5	0.003		
#4 TO	B-4	0.003		
#5 TO	B-3	0.003		
#6 TO	B-2	0.003		
#7 TO	B-1	0.004		
#8 TO	A-6	0.003		
#9 TO	B-5	0.004	✓	✓

Multimeter Make and MTM Serial Number: FLUKE 85 MULTIMETER
S/N # 47900002

Meyer Tool & Mfg., Inc.
4601 W. Southwest Hwy., Oak Lawn, Illinois 60453
708 / 425-9080
Fax 708 / 425-2612

CONTINUITY TESTING
MTM-MP-1020

Box " F " LQX
(Main Magnet Voltage Taps External Wiring)

Function Designator, Tag Or Description		Resistance ohms	Assembly Step	By Date
HARTING D40 CONNECTOR	CERAMSEAL PLUG		FINAL	01/28/05 SC
#10 TO	D-1	0.003		
#11 TO	D-2	0.003		
#12 TO	C-3	0.004		
#13 TO	C-2	0.004		
#14 TO	C-1	0.003		
#15 TO	C-5	0.003		
#16 TO	C-4	0.003		
#17 TO	D-5	0.003		
#18 TO	D-6	0.004		

Multimeter Make and MTM Serial Number: FLUKE 85 MULTIMETER
S/N # 47900002

Meyer Tool & Mfg., Inc.

4601 W. Southwest Hwy., Oak Lawn, Illinois 60453
708 / 425-9080
Fax 708 / 425-2612

CONTINUITY TESTING
MTM-MP-1020

Box " F " LQX
(Corrector Magnet Voltage External Wiring)

Function Designator, Tag Or Description		Resistance ohms	Assembly Step	By Date
HARTING D41 CONNECTOR	CERAMSEAL PLUG		FINAL	01/28/05
#1 TO	E-2	0.003		SC
#2 TO	E-1	0.003		
#3 TO	E-4	0.003		
#4 TO	E-3	0.003		
#5 TO	E-6	0.003		
#6 TO	E-5	0.004		
#7 TO	F-1	0.003		
#8 TO	F-3	0.003		
#9 TO	F-2	0.003		
#10 TO	F-5	0.004		
#11 TO	F-4	0.003		
#12 TO	F-6	0.003		

Multimeter Make and MTM Serial Number: FLUKE 85 MULTIMETER
S/N # 47900002

Meyer Tool & Mfg., Inc.

4601 W. Southwest Hwy., Oak Lawn, Illinois 60453
708 / 425-9080
Fax 708 / 425-2612

CONTINUITY TESTING
MTM-MP-1020

Box "F" LQX
(Warm-up Heaters External Wiring)

Function Designator, Tag Or Description		Resistance ohms	Assembly Step	By Date
BURNDY C41 CONNECTOR	CERAMSEAL PLUG		FINAL	01/28/05
#1 TO	I-5	0.003		SC
#2 TO	I-6	0.003		
#3 TO	J-1	0.003		
#4 TO	J-2	0.004		
#5 TO	J-3	0.003		
#6 TO	J-4	0.003		
#7 TO	J-5	0.003		
#8 TO	J-6	0.004		
#9 TO	K-1	0.003		
#10 TO	K-2	0.003		
#11 TO	K-3	0.003		
#12 TO	K-4	0.003		
#13 TO	K-5	0.003		
#14 TO	K-6	0.003		
#15 TO	L-1	0.003		
#16 TO	L-2	0.004		

Multimeter Make and MTM Serial Number: FLUKE 85 MULTIMETER
S/N # 47900002

Meyer Tool & Mfg., Inc.

4601 W. Southwest Hwy., Oak Lawn, Illinois 60453
708 / 425-9080
Fax 708 / 425-2612

CONTINUITY TESTING
MTM-MP-1020

Box " F " LQX
(Quench Protection Heaters External Wiring)

Function Designator, Tag Or Description		Resistance ohms	Assembly Step	By Date
P41 CONNECTOR	CERAMSEAL PLUG		FINAL	01/28/05 SC
#1 TO	G-1	0.003		
#2 TO	G-2	0.603		
#3 TO	G-3	0.003		
#4 TO	G-4	0.003		
P42 CONNECTOR	CERAMSEAL PLUG			
#1 TO	G-5	0.004		
#2 TO	G-6	0.004		
#3 TO	H-1	0.003		
#4 TO	H-2	0.004		
P43 CONNECTOR	CERAMSEAL PLUG			
#1 TO	H-3	0.003		
#2 TO	H-4	0.003		
#3 TO	H-5	0.003		
#4 TO	H-6	0.003		

Multimeter Make and MTM Serial Number: FLUKE 85 MULTIMETER
S/N # 47900002

Meyer Tool & Mfg., Inc.

4601 W. Southwest Hwy., Oak Lawn, Illinois 60453
708 / 425-9080
Fax 708 / 425-2612

CONTINUITY TESTING
MTM-MP-1020

Box " F " LQX
(Quench Protection Heaters External Wiring)

Function Designator, Tag Or Description		Resistance ohms	Assembly Step	By Date
P44 CONNECTOR	CERAMSEAL PLUG		FINAL	01/28/05
#1 TO	I-1	0.004	↓	SC
#2 TO	I-2	0.003	↓	↓
#3 TO	I-3	0.003	↓	↓
#4 TO	I-4	0.003	↓	↓

Multimeter Make and MTM Serial Number: FLUKE 85 MULTIMETER
S/N # 47900002