MQXB

Job No.:
335

Project/Task No.
300/1.1.3.1.8

Series:
MQXB

Serial No:
MQX2004

Rework ID:
0

Specification No.:
333756

Revision:
None

Place Face Down For Scanning!!!

MQX2004-0

MQXB

LHC DFBX Instrument Duct Weldment & Wiring Assembly

333756 /Rev. None

MQX2004-0

Fermi National Accelerator Laboratory
Batavia, IL 60510

LHC DFBX INSTRUMENT DUCT (MQX2) WELDMENT & WIRING ASSEMBLY

Reference Drawing(s): LHC DFBX Instrument Duct Weldment & Wiring Assembly ME-418180

Project # / Task #: 300/1.1.3.1.8	**Job #: 335**
Released by: Bob Jensen	**Magnet/Device Series: MQXB**
Date: 1/15/04 8:30:03 AM	**Scan Pages:** 25
Prepared by: B. Jensen	

Title	Signature	Date
TD / E&F Process Engineering	*Bob Jensen* Bob Jensen / Designee	**1/9/04**
TD / D&T Assembly	*Dan Eddy* Dan Eddy / Designee	**1/12/04**
TD / D&T Fabrication Manager	*Fred Lewis* Fred Lewis / Designee	**1/9/04**
TD / D&T Project Engineer	*Clark Reid* Tom Peterson / Designee	**1/13/04**

Revision Page

Revision	Step No.	Revision Description	TRR No.	Date
None	N/A	Initial Release	N/A	1/9/04

Ensure appropriate memos and specific instructions are placed with the traveler before issuing the sub traveler binder to production.

1.0 General Notes

1.1 White (Lint Free) Gloves (Fermi stock 2250-1800) or Surgical Latex Gloves (Fermi stock 2250-2494) shall be worn by all personnel when handling all product parts after the parts have been prepared/cleaned.

1.2 All steps that require a sign-off shall include the Technician/Inspectors first initial and full last name.

1.3 No erasures or white out will be permitted to any documentation. All incorrectly entered data shall be corrected by placing a single line through the error, initial and date the error before adding the correct data.

1.4 All Discrepancy Reports issued shall be recorded in the left margin next to the applicable step.

1.5 Personnel shall perform all tasks in accordance with current applicable ES&H guidelines and those specified within the step.

2.0 Parts Kit List

2.1 No Parts Kit required.

3.0 Assembly & Welding

3.1 Acquire the following components and complete the assembly by welding components together in accordance with Dwg ME-418180.

Note: All components must be thoroughly cleaned with Isopropyl Alcohol (Fermi stock 1920-0300) or approved equivalent prior to welding.

MB-418173	Top Plate – Closure Flange	1 ea
MC-418164	Flex Hose Assembly (MQX2)	1 ea
MB-418142	Lateral Fitting	1 ea
MB-418175	Q3 Interconnect Flange	1 ea
Item #5	Tube, 1" O.D. x 0.049" x 9 13/16" long	1 ea
Item #6	Tube ¾" O.D. x 0.049" x 2 ½" long	1 ea

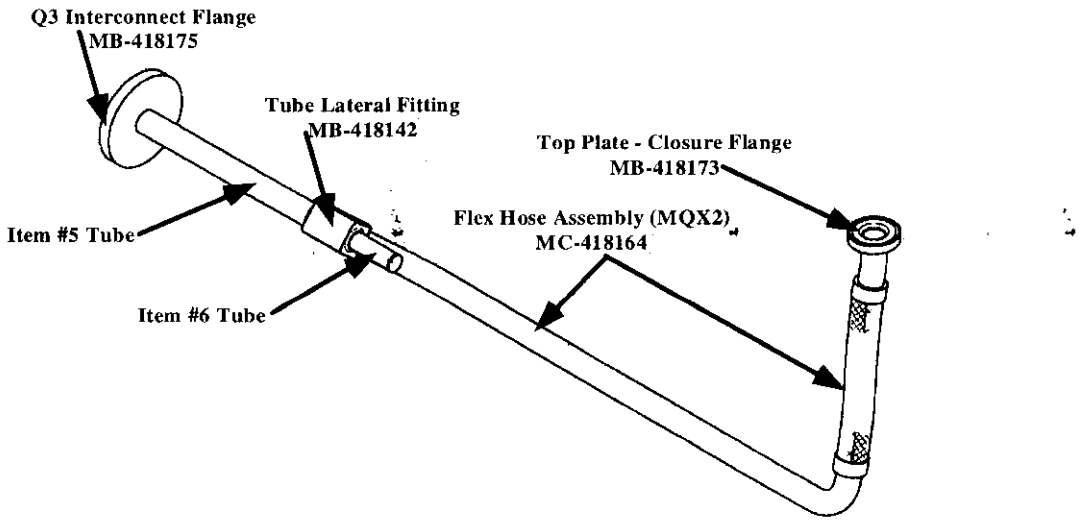

Note: Clark Reid took the conduit piping parts and drawings to the village weld shop where they were welded up as an assembly. Tom Peterson, March 19, 2004

3.2 Perform a Vacuum Leak Check of the DFBX Tube Assembly and record results below.

PART NO.		SCALE UNITS BEFORE HELIUM PROBE	SCALE UNITS WHILE ENCLOSURE FLOODING	DETERMINATION OF MINIMUM DETECTABLE LEAK				
DATE TIME	OPERATOR'S LAST NAME			MDS ÷ ((Response -Bckgnd) ÷ Leak Value) = MDL				
	Massengill							
		No Leak						

Colt Stocker 11-18-04

Inspector

Date

LHC DFBX Instrument Duct Assembly

Device Serial No. MQX2004-0
Notes:

3.3 Stamp the serial number from the bottom of this traveler using approved methods onto the DFBX Instrument Duct Weldment & Wiring Assembly as shown below.

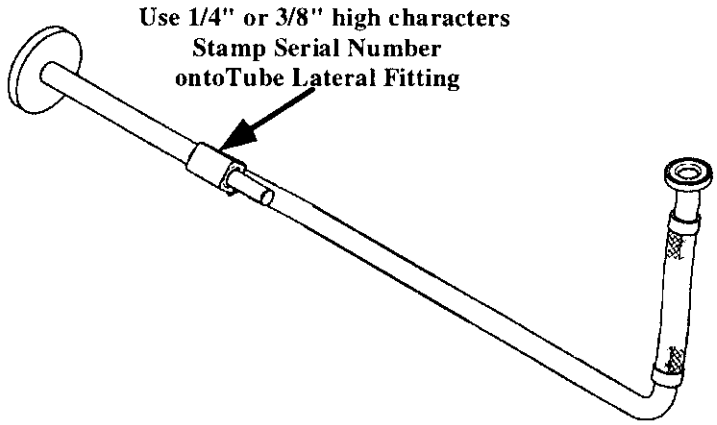

Technician(s) _____ Date 1-21-04

4.0 Wire Harness Assembly

4.1 Process and assemble the following wire packages in accordance with Dwg ME-418180.

Note: Each individual wire must be labeled prior to assembly into Q3-DFBX connector, as per attached spreadsheet.
Labeling should be ~ 3" from connector.
Labeling should be ~14" from non-connector end and installed after wire bundle is inserted into Instrument Duct. (See Step 4.5)

Note: ~ 1 twist/ 3 in –individual cables are 9 foot in length prior to twisting.

Item	Color	Gauge	Description	Wire Count	Spares	Completed by Technician
#11	Red	20	Quench Protection Twisted	16 wires (8 – Twisted Pairs)	2 pair	Dan W.
#12	Red	20	Warm-Up Heaters Twisted	16 wires (8 – Twisted Pairs)	None	Dan W.
#13	Orange	26	Quad Voltage Taps Twisted	24 wires (Twisted as bundle)	2 spares	Dan W.
#14	Orange	26	Corrector Voltage Taps **(Not Twisted)**	12 wires (1 bundle – not twisted)	2 spare	Dan W.
#15	Gold	30	Temperature Sensors Twisted 4 wire Pairs	32 wires (8 – bundles)	1 spare	Dan W.

Q3 connector (non-ip, or non-lead end) for Q3-DFBX connection. Completed 11-20-03.

Module	Pin	CERN Label	Description	Technician Connector End	Techncian Non Connecto End
M1	1		Blank Module		
M1	2				
M1	3				
M1	4				
M1	5				
M2	1	EE1111	Q1 Lead Voltage Tap "a" , primary	X	X
M2	2	EE1121	Q1 Lead Voltage Tap "a", redundant	X	X
M2	3	EE1211	Q1 Center Voltage Tap "c", primary	X	X
M2	4	EE1221	Q1 Center Voltage Tap "c", redundant	X	X
M2	5	EE1311	Q1 Lead Voltage Tap "b", primary	X	X
M3	1	EE1222	Q2a Center Voltage Tap "c" , redundant	X	X
M3	2	EE1212	Q2a Center Voltage Tap "c" , primary	X	X
M3	3	EE1122	Q2a Lead Voltage Tap "a", redundant	X	X
M3	4	EE1112	Q2a Lead Voltage Tap "a", primary	X	X
M3	5	EE1321	Q1 Lead Voltage Tap "b",redundant	X	X
M4	1	EE1312	Q2a Lead Voltage Tap "b", primary	X	X
M4	2	EE1322	Q2a Lead Voltage Tap "b", redundant	X	X
M4	3	EE1612	Q2b Lead Voltage Tap "b", primary	X	X
M4	4	EE1622	Q2b Lead Voltage Tap "b", redundant	X	X
M4	5	EE1512	Q2b Center Voltage Tap "c" , primary	X	X
M5	1	EE1123	Q3 Lead Voltage Tap "a", redundant	X	X
M5	2	EE1113	Q3 Lead Voltage Tap "a", primary	X	X
M5	3	EE1422	Q2b Lead Voltage Tap "a", redundant	X	X
M5	4	EE1412	Q2b Lead Voltage Tap "a", primary	X	X
M5	5	EE1522	Q2b Center Voltage Tap "c" , redundant	X	X
M6	1	EE1213	Q3 Center Voltage Tap "c" , primary	X	X
M6	2	EE1223	Q3 Center Voltage Tap "c" , redundant	X	X
M6	3	EE1313	Q3 Lead Voltage Tap "b" , primary	X	X
M6	4	EE1323	Q3 Lead Voltage Tap "b" , redundant	X	X
M6	5	Empty	No connection		
M7	1		Blank Module		
M7	2				
M7	3				
M7	4				
M7	5				
M8	1	EE8121	Corrector voltage tap Q1-H1 (skew dipole) (on MCBX, MCBXH, A+ lead)	X	X
M8	2	EE8111	Corrector voltage tap Q1-V1 (normal dipole) (on MCBX, MCBXV A+ lead)	X	X
M8	3	EE8122	Corrector voltage tap Q2-H2 (skew dipole) (on MCBX, MCBXH, A+ lead)	X	X
M8	4	EE8112	Corrector voltage tap Q2-V2 (normal dipole) (on MCBX, MCBXV, A+ lead)	X	X
M8	5	Empty	No connection		
M9	1	EE8123	Corrector voltage tap Q3-H3 (skew dipole) (on MCBXA, MCBXH, A+ lead)	X	X
M9	2	EE8113	Corrector voltage tap Q3-V3 (normal dipole) (on MCBXA, MCBXV, A+ lead)	X	X
M9	3	EE8223	Corrector voltage tap Q3-A2 (skew quadrupole) (on MQSX, MQSX, A+ lead)	X	X
M9	4	EE8323	Corrector voltage tap Q3-A3 (skew sextupole) (on MCSOX, MCSSX, A+ lead)	X	X
M9	5	Empty	No Connection		

Q3 connector (non-ip, or non-lead end) for Q3-DFBX connection. Completed 11-20-03.

Module	Pin	CERN Label	Description	Technician Connector End	Technician N Connector End
M10	1	EE8313	Corrector voltage tap Q3-B3 (normal sextupole)(on MCBXA, MCSX, A+ lead)	X	X
M10	2	EE8423	Corrector voltage tap Q3-A4 (skew octupole) (on MCSOX, MCOSX, A+ lead)	X	X
M10	3	EE8413	Corrector voltage tap Q3-B4 (normal octupole) (on MCSOX, MCOX, A+ lead)	X	X
M10	4	EE8613	Corrector voltage tap Q1-B6 (normal dodecapole) (on MCBXA, MCTX, A+ lead)	X	X
M10	5	Empty	No Connection		
M11	1		Blank Module		
M11	2				
M11	3				
M11	4				
M11	5				
M12	1	EH8311+	Q1 Cryogenic Heater lead end - wire at top (CERN #1 I+)	X	X
M12	2	EH8311-	Q1 Cryogenic Heater lead end - wire at bottom (CERN #1 I-)	X	X
M12	3	EH8321+	Q1 Cryogenic Heater non-lead end - wire at top (CERN #2 I+)	X	X
M12	4	EH8321-	Q1 Cryogenic Heater non-lead end - wire at bottom (CERN #2 I-)	X	X
M12	5	Empty	No Connection		
M13	1	EH8312+	Q2A Cryogenic Heater lead end - wire toward cold mass end plate (CERN #1 I+)	X	X
M13	2	EH8312-	Q2A Cryogenic Heater lead end - wire toward cold mass mag center (CERN #1 I-)	X	X
M13	3	EH8322+	Q2A Cryogenic Heater non-lead end- wire toward cold mass end plate (CERN #2 I+)	X	X
M13	4	EH8322-	Q2A Cryogenic Heater non-lead end- wire toward cold mass mag center (CERN #2 I-)	X	X
M13	5	Empty	No connection		
M14	1	EH8332+	Q2B Cryogenic Heater lead end - wire toward cold mass end plate (CERN #1 I+)	X	X
M14	2	EH8332-	Q2B Cryogenic Heater lead end - wire toward cold mass mag center (CERN #1 I-)	X	X
M14	3	EH8342+	Q2B Cryogenic Heater non-lead end- wire toward cold mass end plate (CERN #2 I+)	X	X
M14	4	EH8342-	Q2B Cryogenic Heater non-lead end- wire toward cold mass mag center (CERN #2 I-)	X	X
M14	5	Empty	No connection		
M15	1	EH8313+	Q3 Cryogenic Heater lead end - wire at top (CERN #1 I+)	X	X
M15	2	EH8313-	Q3 Cryogenic Heater lead end - wire at bottom (CERN #1 I-)	X	X
M15	3	EH8323+	Q3 Cryogenic Heater non-lead end - wire at top (CERN #2 I+)	X	X
M15	4	EH8323-	Q3 Cryogenic Heater non-lead end - wire at bottom (CERN #2 I-)	X	X
M15	5	Empty	No Connection		
M16	1		Blank Module		
M16	2				
M16	3				
M16	4				
M16	5				
M17	1	YT1111+	Q1 Protection (Strip) Heater, ("a" circuit) (CERN lead #1+)	X	X
M17	2	Empty	No connection		
M17	3	YT1111-	Q1 Protection (Strip) Heater, ("a" circuit) (CERN lead #1-)	X	X
M17	4	Empty	No connection		
M17	5	YT1121+	Q1 Protection (Strip) Heater, ("b" circuit) (CERN lead #2+)	X	X
M18	1	Empty	No connection		
M18	2	YT1112+	Q2a Protection (Strip) Heater, 1-4 & 2-3 circuit (FNAL lead A+) (CERN lead #1+)	X	X
M18	3	Empty	No connection		
M18	4	YT1121-	Q1 Protection (Strip) Heater, ("b" circuit) (CERN lead #2-)	X	X
M18	5	Empty	No connection		

Q3 connector (non-ip, or non-lead end) for Q3-DFBX connection. Completed 11-20-03.

Module	Pin	CERN Label	Description	Technician Connector End	Technician Non Connector End
M19	1	YT1112-	Q2a Protection (Strip) Heater, 1-4 & 2-3 circuit (FNAL lead A-) (CERN lead #1-)	X	X
M19	2	Empty	No connection		
M19	3	YT1122+	Q2a Protection (Strip) Heater, 1-2 & 3-4 circuit (FNAL lead B+) (CERN lead#2+)	X	X
M19	4	Empty	No connection		
M19	5	YT1122-	Q2a Protection (Strip) Heater, 1-2 & 3-4 circuit (FNAL lead B-) (CERN lead #2-)	X	X
M20	1	Empty	No connection		
M20	2	YT1132-	Q2b Protection (Strip) Heater, 1-4 & 2-3 circuit (FNAL lead A-) (CERN lead #1-)	X	X
M20	3	Empty	No connection		
M20	4	YT1132+	Q2b Protection (Strip) Heater, 1-4 & 2-3 circuit (FNAL lead A+) (CERN lead #1+)	X	X
M20	5	Empty	No connection		
M21	1	YT1142+	Q2b Protection (Strip) Heater, 1-2 & 3-4 circuit (FNAL lead B+) (CERN lead#2+)	X	X
M21	2	Empty	No connection		
M21	3	YT1142-	Q2b Protection (Strip) Heater, 1-2 & 3-4 circuit (FNAL lead B-) (CERN lead #2-)	X	X
M21	4	Empty	No Connection		
M21	5	YT1113+	Q3 Protection (Strip) Heater, ("a" circuit) (CERN lead #1+)	X	X
M22	1	Empty	No Connection		
M22	2	YT1123+	Q3 Protection (Strip) Heater, ("b" circuit) (CERN lead #2+)	X	X
M22	3	Empty	No Connection		
M22	4	YT1113-	Q3 Protection (Strip) Heater, ("a" circuit) (CERN lead #1-)	X	X
M22	5	Empty	No Connection		
M23	1	YT1123-	Q3 Protection (Strip) Heater, ("b" circuit) (CERN lead #2-)	X	X
M23	2	Empty	No Connection		
M23	3	Empty	No Connection		
M23	4	Empty	No Connection		
M23	5	Empty	No Connection		
M24	1		Blank Module		
M24	2				
M24	3				
M24	4				
M24	5				
M25	1	TT8311 I+	Q1 RTD, primary Wire color: Yellow	X	X
M25	2	TT8311 I-	Q1 RTD, primary Wire color: Green	X	X
M25	3	TT8311 U+	Q1 RTD, primary Wire color: Black	X	X
M25	4	TT8311 U-	Q1 RTD, primary Wire color: Red	X	X
M25	5	TT8321 I+	Q1 RTD, redundant: Wire color: Yellow	X	X
M25	6	TT8321 I-	Q1 RTD, redundant: Wire color: Green	X	X
M25	11	TT8321 U+	Q1 RTD, redundant: Wire color: Black	X	X
M25	10	TT8321 U-	Q1 RTD, redundant: Wire color: Red	X	X
M25	9	TT8312 I+	Q2a RTD, primary Wire color: Yellow	X	X
M25	8	TT8312 I-	Q2a RTD, primary Wire color: Green	X	X
M25	7	TT8312 U+	Q2a RTD, primary Wire color: Black	X	X
M25	12	TT8312 U-	Q2a RTD, primary Wire color: Red	X	X
M25	13	TT8322 I+	Q2a RTD, redundant: Wire color: Yellow	X	X
M25	14	TT8322 I-	Q2a RTD, redundant: Wire color: Green	X	X
M25	15	TT8322 U+	Q2a RTD, redundant: Wire color: Black	X	X
M25	16	TT8322 U-	Q2a RTD, redundant: Wire color: Red	X	X
M25	17	Empty	No connection		

Note: Pin numbers of module M25 are not listed in numerical order

Q3 connector (non-ip, or non-lead end) for Q3-DFBX connection. Completed 11-20-03.

Note: Pin numbers of module M26 are not listed in numerical order

Module	Pin	CERN Label	Description	Technician Connector End	Technician Connector End
M26	1	TT8332 I+	Q2b RTD, primary Wire color: Yellow	X	X
M26	2	TT8332 I-	Q2b RTD, primary Wire color: Green	X	X
M26	3	TT8332 U+	Q2b RTD, primary Wire color: Black	X	X
M26	4	TT8332 U-	Q2b RTD, primary Wire color: Red	X	X
M26	5	TT8342 I+	Q2b RTD, redundant: Wire color: Yellow	X	X
M26	6	TT8342 I-	Q2b RTD, redundant: Wire color: Green	X	X
M26	11	TT8342 U+	Q2b RTD, redundant: Wire color: Black	X	X
M26	10	TT8342 U-	Q2b RTD, redundant: Wire color: Red	X	X
M26	9	TT8313 I+	Q3 RTD, primary Wire color: Yellow	X	X
M26	8	TT8313 I-	Q3 RTD, primary Wire color: Green	X	X
M26	7	TT8313 U+	Q3 RTD, primary Wire color: Black	X	X
M26	12	TT8313 U-	Q3 RTD, primary Wire color: Red	X	X
M26	13	TT8323 I+	Q3 RTD, redundant: Wire color: Yellow	X	X
M26	14	TT8323 I-	Q3 RTD, redundant: Wire color: Green	X	X
M26	15	TT8323 U+	Q3 RTD, redundant: Wire color: Black	X	X
M26	16	TT8323 U-	Q3 RTD, redundant: Wire color: Red	X	X
M26	17	Empty	No connection		

Hypertronics Connector Pin Locations Q3 non-lead (non-ip) end.
VIEW: Female (pin) solder cup side

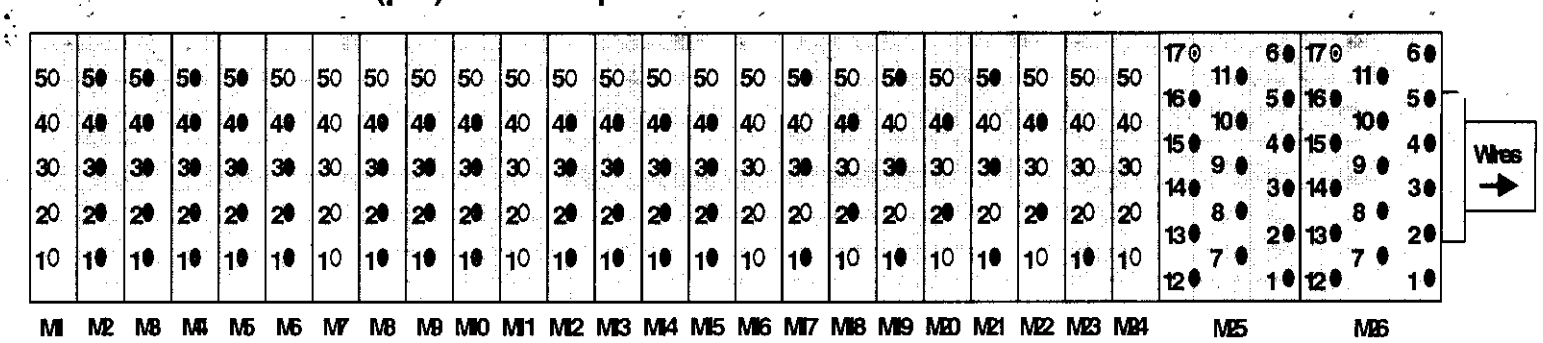

- ● Hole filled in grey: Wire soldered to pin.
- ⊙ Hole with dot in center: Pin exists but no wire soldered to it.
- ○ Hole filled in white: No pin. Hole is drilled out.

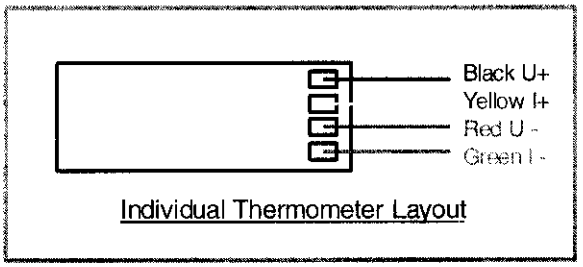

Don W.
Technician(s)

1-21-04
Date

4.2 Assemble the wire packages and secure into a bundle.

Dan W. 1-21-04

Technician(s) Date

4.3 Terminate ends of the wire bundle and install them into the Q3-DFBX Connector – 28 unit (MB-418106) using the following parts:

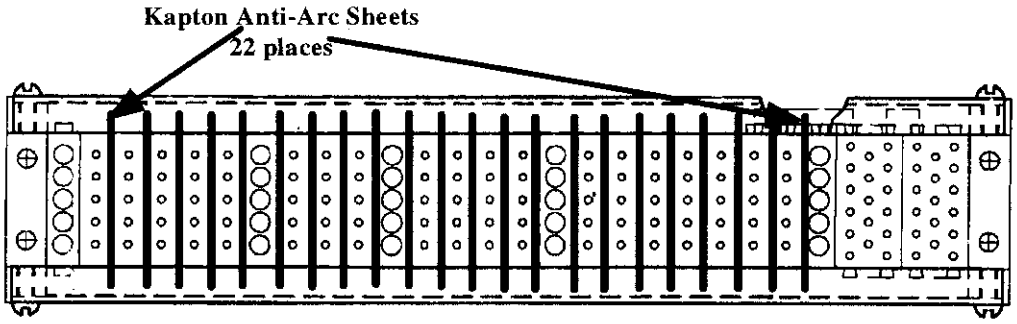

Q3-DFBX Connector
MA-418106

MA-418097	Blank 5 Pin #LAHT	5 ea
MA-418095	Female 5 Pin #LAMSTH	19 ea
MA-419099	Female 17 Pin #LDMSTH	2 ea
MA-418103	Plastic Block #YHD0027	50ea
MA-418104	End Part #YEC0076C	2 ea
MA-418102	Mounting Rail #YSR0028Z	2 ea
MA-418195	Screw, M-3	4 ea.

Note: Install Kapton Anti-Arc Sheets in position noted above as wires are being terminated to connector.

Dan W. 1-21-04

Technician(s) Date

4.4 Install wire package into DFBX Duct Assembly.

Dan W. 1-21-04

Technician(s) Date

4.5 Label the non-connector end wires ~ 14" from the end of each wire.

Note: See Step 4.1 for labeling spreadsheet.

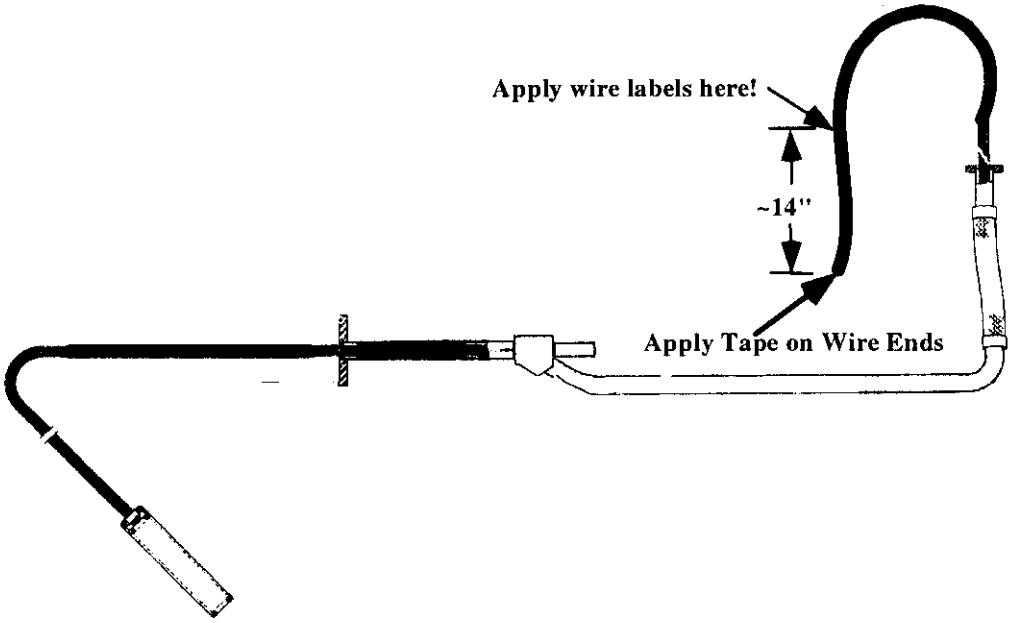

Dan W. 1-21-04

Technician(s) Date

4.6 Prepare the wire bundle for hipotting by performing the following:

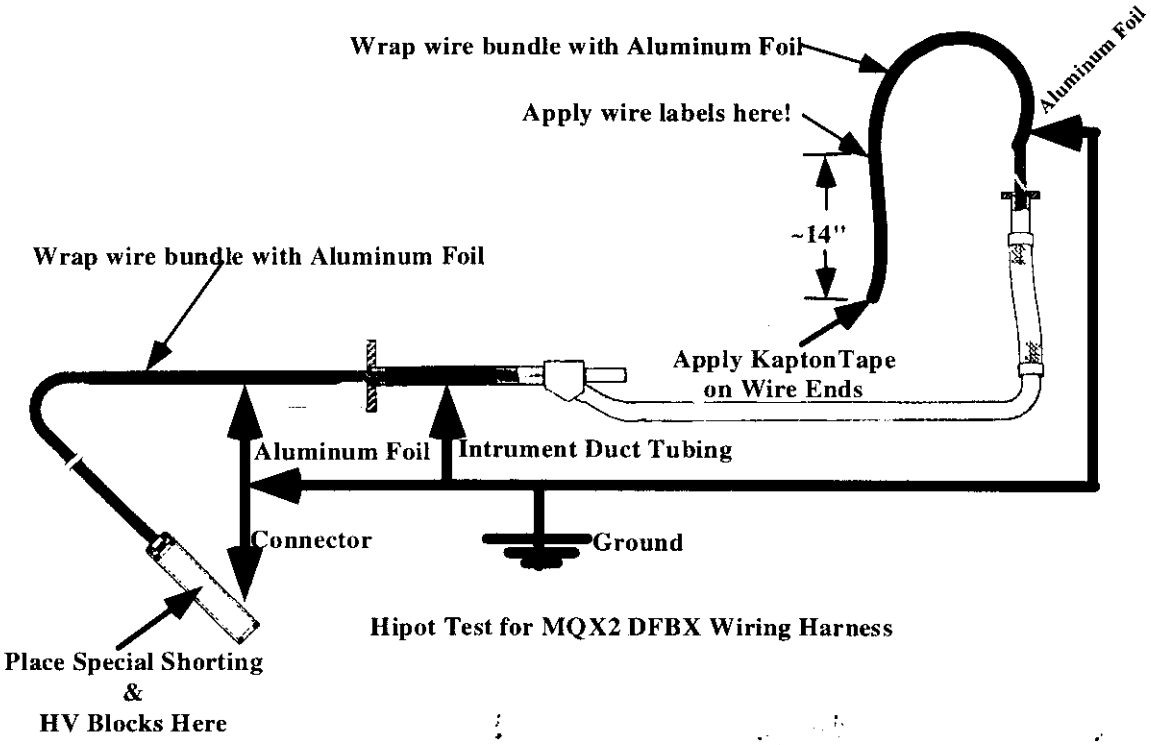

4.6.1	Check for continuity between all wire and for shorts between each pin and all other pins of the RTD's.	☑
4.6.2	Ground Outer Tube	☑
4.6.3	Place Kapton Tape on wire ends to prevent shorting.	☑
4.6.4	Install Connector & Access Cover (MB-418067).	☑
4.6.5	Wrap entire lengths of excess wire extending out from both ends of the tube with aluminum foil.	☑
4.6.6	Wrap wire around both ends of the tube extending over the foil to make a connection between foil and tube.	☑
4.6.7	Using the special Hypertronic HV Modules and Hipot Form, attach High Voltage from HV Power Supply to First set or group of wires to be tested.	☑
4.6.8	Follow Hipot Form until all Hipots are completed (See Step 4.5).	☑
4.6.9	If wire(s) fail Hipot, determine which one(s) are bad, remove from the tube and install new one(s).	☑
4.6.10	After Hipot is determined good, remove aluminum foil and attach wire.	☑

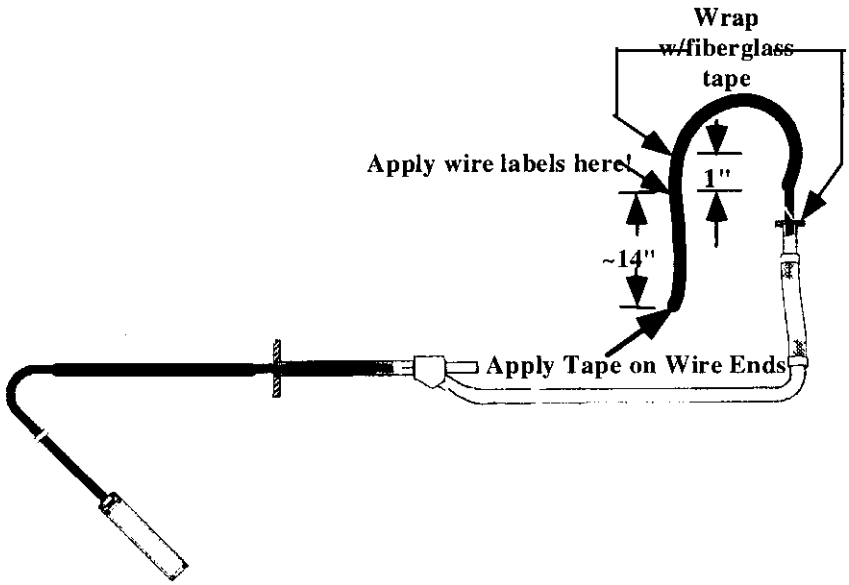

4.6.11 Put glass tape one inch from the labels on the non-connector end to keep them from sliding off. ☑

Dan W.
Technician(s)

1-21-04
Date

4.7 Electrically check the wire bundle by performing a hipot and record results below.

Hipot	All Others Grounded	All Other Floating	Trip Voltage	5.0 Kv/Current	Comments
VTAPS	X			.04uA	
VTAPS		X		.04uA	
CCOIL	X			.04uA	
CCOIL		X		.04uA	
RTD's (to 300V)	X			.01uA	
RTD's (to 300V)		X		.01uA	
CRYO HEATERS (Warm-Up Heaters)	X			.04uA	✓
CRYO HEATERS (Warm-Up Heaters)		X		.04uA	
Strip Heaters (Potted In Pairs)					
Pair #1	X			.04uA	
Pair #2	X			.04uA	
Pair #3	X			.04uA	
Pair #4	X			.04uA	
Pair #5	X			.04uA	
Pair #6	X			.04uA	
Pair #7	X			.04uA	
Pair #8	X			.04uA	
Strip Heaters (Potted In Pairs)					
Pair #1		X		.04uA	
Pair #2		X		.04uA	
Pair #3		X		.04uA	
Pair #4		X		.04uA	
Pair #5		X		.04uA	
Pair #6		X		.04uA	
Pair #7		X		.04uA	
Pair #8		X		.04uA	
Spare VTAP Wire(4)	X			.04uA	
Corrector Voltage Taps		X		.04uA	
Spare Heater Wires (2 pair)	X			.04uA	
		X		.04uA	
Spare RTD Wire (1)	X			.01uA	
		X		.01uA	

Dan W.
Technician(s)

1-21-04
Date

5.0 Material Development Lab

5.1 Prepare DFBX Instrument Duct for Pre-Cast Dam and Epoxy Plug. Process Pre-Cast Dam and Epoxy Lug in accordance with ME-418180 and other approved methods.

Note: Ensure proper Wire Bundle Length of 24" is maintained from Wire Bundle Connector and DFBX Instrument Duct Weldment Assy as per Dwg ME-418180.

Note: Dave Burk at the Materials Testing and Development Lab in the village processed the pre-cast epoxy dam and epoxy plug for all the conduits.
Tom Peterson, March 19, 2004

6.0 Final Assembly

6.1 Check each wire for continuity including spares. ☑

6.2 Check each wire for shorting to adjacent wire within each pin connector. ☑

Dan W. 1-21-04

Technician(s) Date

6.3 Perform an hipot check with the Capillary Tube to ground.

Hipot	All Others Grounded	All Other Floating	Trip Voltage	5.0 Kv/Current	Comments
VTAPS	X			.04uA	
VTAPS		X		.04uA	
CCOIL	X			.04uA	
CCOIL		X		.04uA	
RTD's (to 300V)	X			.01uA	
RTD's (to 300V)		X		.01uA	
CRYO HEATERS (Warm-Up Heaters)	X			.04uA	
CRYO HEATERS (Warm-Up Heaters)		X		.04uA	
Strip Heaters (Potted In Pairs)					
Pair #1	X			.04uA	
Pair #2	X			.04uA	
Pair #3	X			.04uA	
Pair #4	X			.04uA	
Pair #5	X			.04uA	
Pair #6	X			.04uA	
Pair #7	X			.04uA	
Pair #8	X			.04uA	
Strip Heaters (Potted In Pairs)					
Pair #1		X		.04uA	
Pair #2		X		.04uA	
Pair #3		X		.04uA	
Pair #4		X		.04uA	
Pair #5		X		.04uA	
Pair #6		X		.04uA	
Pair #7		X		.04uA	
Pair #8		X		.04uA	
Spare VTAP Wire(4)	X			.04uA	
Corrector Voltage Taps		X		.04uA	
Spare Heater Wires (2 pair)	X			.04uA	
		X		.04uA	
Spare RTD Wire (1)	X			.01uA	
		X		.01uA	

Dan W.
Technician(s)

1-21-04
Date

6.4 Acquire the following components and complete the assembly by welding components together in accordance with Dwg ME-418180.

Note: All components must be thoroughly cleaned with Isopropyl Alcohol (Fermi stock 1920-0300) or approved equivalent prior to welding.

Note: Protect the Wire Bundle from touching the weld areas until welding heat has been dissipated to prevent damage to Wire Bundle.

Item #7	Blank Off	1 ea
Item #8	Tube, 3 ½" O.D. x 0.065" x 7.28" long	1 ea
MB-390073	Cold Mass Bellows Assembly	1 ea

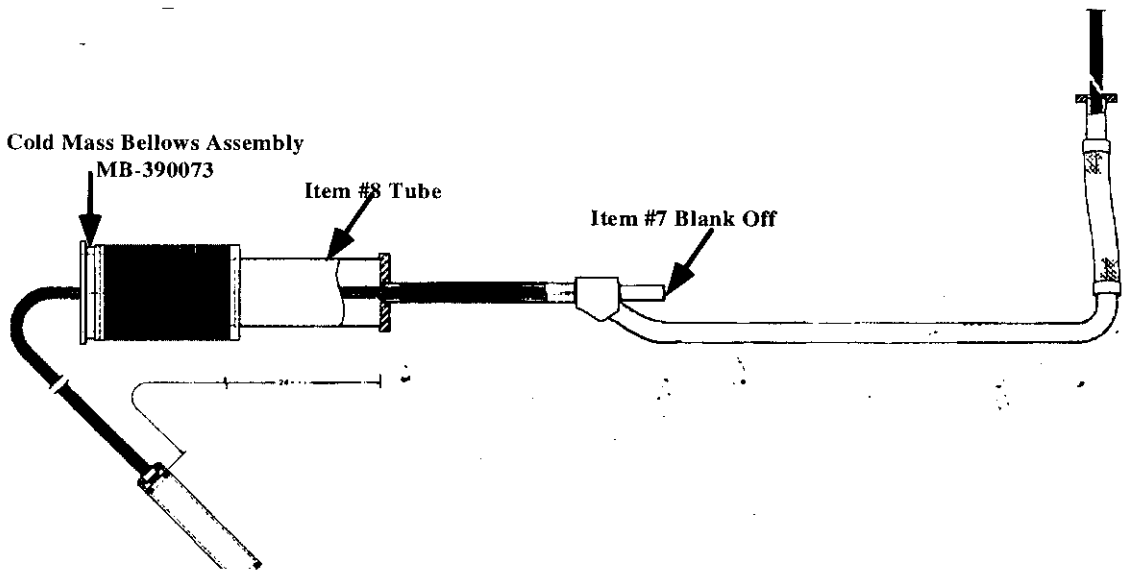

Note: Clark Reid took the conduit piping parts and drawings to the village weld shop where they were welded up as an assembly. Tom Peterson, March 19, 2004

6.5 Perform a Vacuum Leak Check of the DFBX Tube Assembly and record results below.

PART NO.		SCALE UNITS BEFORE HELIUM PROBE	SCALE UNITS WHILE ENCLOSURE FLOODING	DETERMINATION OF MINIMUM DETECTABLE LEAK				
DATE TIME	OPERATOR'S LAST NAME			MDS ÷ ((Response -Bckgnd) ÷ Leak Value) = MDL STD Leak = 1.86x10⁻⁸				
1-17-04	Massengill	20x5	20x5		27x5	8x1		

Inspector

1-17-04
Date

6.6 Electrically check the wire bundle by performing a hipot and record results below.

Note: See Step 4.4 for proper preparations for Hipot.

Hipot	All Others Grounded	All Other Floating	Trip Voltage	5.0 Kv/Current	Comments
VTAPS	X			.04uA	
VTAPS		X		.04uA	
CCOIL	X			.04uA	
CCOIL		X		.04uA	
RTD's (to 300V)	X			.01uA	
RTD's (to 300V)		X		.01uA	
CRYO HEATERS (Warm-Up Heaters)	X			.04uA	
CRYO HEATERS (Warm-Up Heaters)		X		.04uA	
Strip Heaters (Potted In Pairs)					
Pair #1	X			.04uA	
Pair #2	X			.04uA	
Pair #3	X			.04uA	
Pair #4	X			.04uA	
Pair #5	X			.04uA	
Pair #6	X			.04uA	
Pair #7	X			.04uA	
Pair #8	X			.04uA	
Strip Heaters (Potted In Pairs)					
Pair #1		X		.04uA	
Pair #2		X		.04uA	
Pair #3		X		.04uA	
Pair #4		X		.04uA	
Pair #5		X		.04uA	
Pair #6		X		.04uA	
Pair #7		X		.04uA	
Pair #8		X		.04uA	
Spare VTAP Wire(4)	X			.04uA	
Corrector Voltage Taps		X		.04uA	
Spare Heater Wires (2 pair)	X			.04uA	
		X		.04uA	
Spare RTD Wire (1)	X			.01uA	
		X		.01uA	
		X		—	

Jan W.
Technician(s)

1-21-04
Date

6.7 Install Thermal Intercept Block (MB-418184) using Hex Head Cap Screw (1/4" -20" X 2 ¼" long) and Hex Nut (1/4" –20) in accordance with Dwg ME-418180.

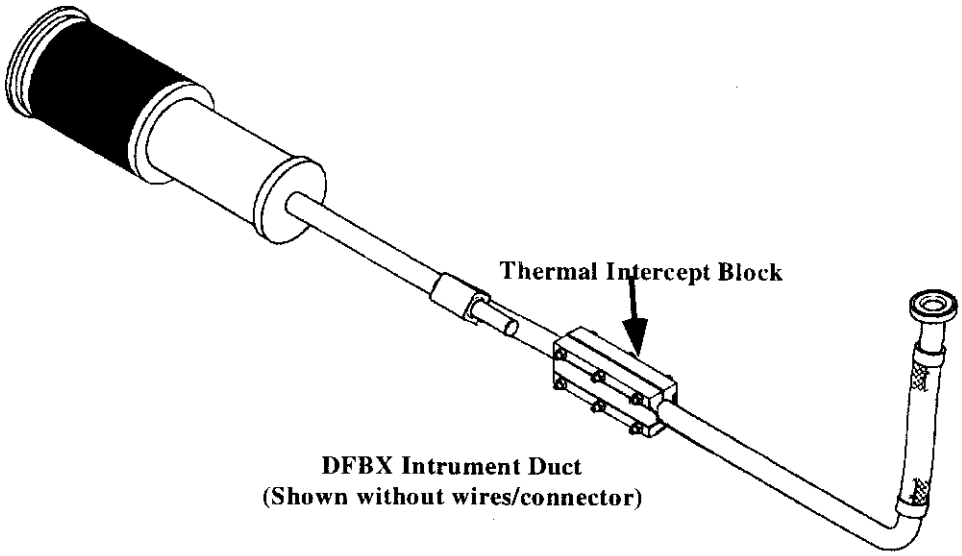

Note: The thermal intercept block is not installed at Fermilab, but has been provided separately to Meyer Tool. Tom Peterson, March 19, 2004

6.8 Prepare the DFBX Instrument Duct/Wiring Assembly for shipment by performing the below:

6.8.1 On the connector end, fold over the spare wires and tape to the wire bundle with white fiberglass tape. See Figure #1 below. ☑

6.8.2 Coil the connector end wire bundle and insert into the bellows assembly. Ensure the Connector is pointing outward after insertion into bellows assy. ☑

6.8.3 Wrap the bellows assembly with cardboard and secure with tape. ☑

6.8.4 Insert Plastic Cover, Red, into cardboard protector and secure with tape. ☑

6.8.5 Fold over spare wires and tape to the non-connector end wire bundle. Only ½" up to the labels. See Figure #1 & Figure #2 below. ☑

6.86 Tape the non-connector end wire bundle to the Instrument Duct Tube. ☑

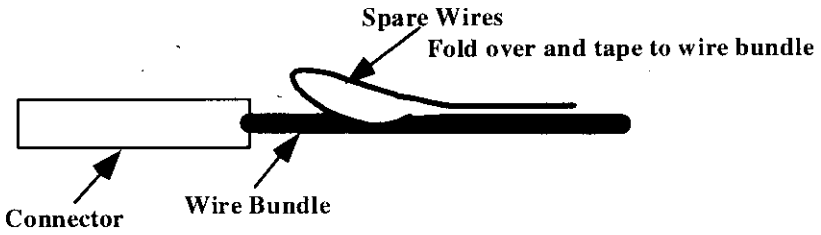

Figure 1

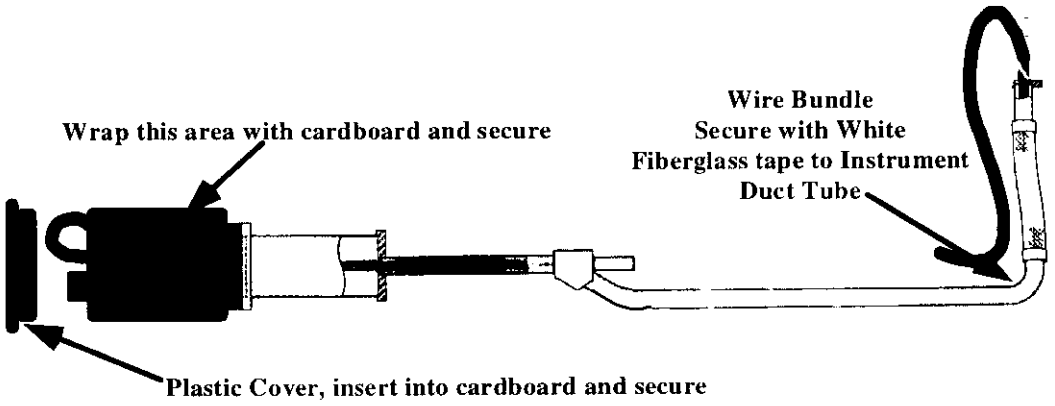

Figure 2

Dan W.
Technician(s)

1-21-04
Date

7.0 Production Complete

7.1 Process Engineering verify that the LHC DFBX Instrument Duct Assembly Traveler is accurate and complete. This shall include a review of all steps to ensure that all operations have been completed and signed off. Ensure that all Discrepancy Reports, Nonconformance Reports, Repair/Rework Forms, Deviation Index and dispositions have been reviewed by the Responsible Authority for conformance before being approved.

Comments:

Delivered to Meyer Tool on January 20, 2004
Tom Peterson

Bob Johnson
Process Engineering/Designee

4/15/04
Date