AMI Leads Documentation

Current Lead Test Data Sheet

Current Lead Serial Number 4W0116 A Dwg and Rev Number 03-9551-3006-R1

Test #	Test Title		Date	Technician

1 Dimensional Check

Dimension A

Lead #1	5 45/64	1-23-04	JACK
Lead #2	5 45/64		
Lead #3	5 23/32		
Lead #4	5 45/64		
Lead #5	5 23/32		
Lead #6	5 23/32		
Lead #7	5 23/32		
Lead #8	5 23/32		
Lead #9	5 47/64		
Lead #10	5 47/64		

Dimension B

Lead #1	9 39/64	1-23-04	JACK
Lead #2	9 39/64		
Lead #3	9 39/64		
Lead #4	9 39/64		
Lead #5	9 39/64		
Lead #6	9 39/64		
Lead #7	9 39/64		
Lead #8	9 39/64		
Lead #9	9 5/8		
Lead #10	9 5/8		

Dimension C

Lead #1	39 13/64	1-23-04	JACK
Lead #2	39 13/64		
Lead #3	39 13/64		
Lead #4	39 13/64		
Lead #5	39 13/64		
Lead #6	39 13/64		
Lead #7	39 13/64		
Lead #8	39 13/64		
Lead #9	39 3/16		
Lead #10	39 3/16		

Test #	Test Title		Date	Technician

Dimension D

Lead #1	31 5/16	1-23-04	JACK
Lead #2	31 9/32		
Lead #3	31 19/64		
Lead #4	31 9/32		
Lead #5	31 19/64		
Lead #6	31 9/32		
Lead #7	31 9/32		
Lead #8	31 9/32		
Lead #9	31 9/32		
Lead #10	31 9/32		

Dimension E

Lead #1	6	1-23-04	JACK
Lead #2	6		
Lead #3	6		
Lead #4	6		
Lead #5	6		
Lead #6	6		
Lead #7	6		
Lead #8	6		
Lead #9	6		
Lead #10	6		

Dimension F	5.140	1-23-04	JACK

Dimension G

Lead #1	1/64	1-23-04	JACK
Lead #2	0		
Lead #3	0		
Lead #4	0		
Lead #5	0		
Lead #6	0		
Lead #7	0		
Lead #8	0		
Lead #9	1/64		
Lead #10	1/64		

Dimension H	.004	1-23-04	JACK

Test #	Test Title		Date	Technician
2	Pressure Test			
	Result (circle one)	Pass/Fail	1-19-04	RF
	Degradation of pressure?	NONE		
3	Leak Test			
	Result (circle one)	Pass/Fail	1-20-04	RF
	Leak rate achieved?	4.7×10^{-9}		
4	Voltage Isolation Test In Air			
	Result (circle one)	Pass/Fail	1-20-04	BM
	Isolation voltage achieved	2KV/4KV		
5	Voltage Isolation Test In Dewar			
	Result (circle one)	Pass/Fail	1-29-04	BM
	Isolation voltage achieved	600V		
6	Full Current Test			
	Result (circle one)	Pass/Fail	1-29-04	BM
	Max voltage across lead			
	Lead			
	Lead			
	Lead			
	Lead			
	Lead			
	Lead			
	Lead			
	Lead			
	Lead			
	Lead			

Project Engineer

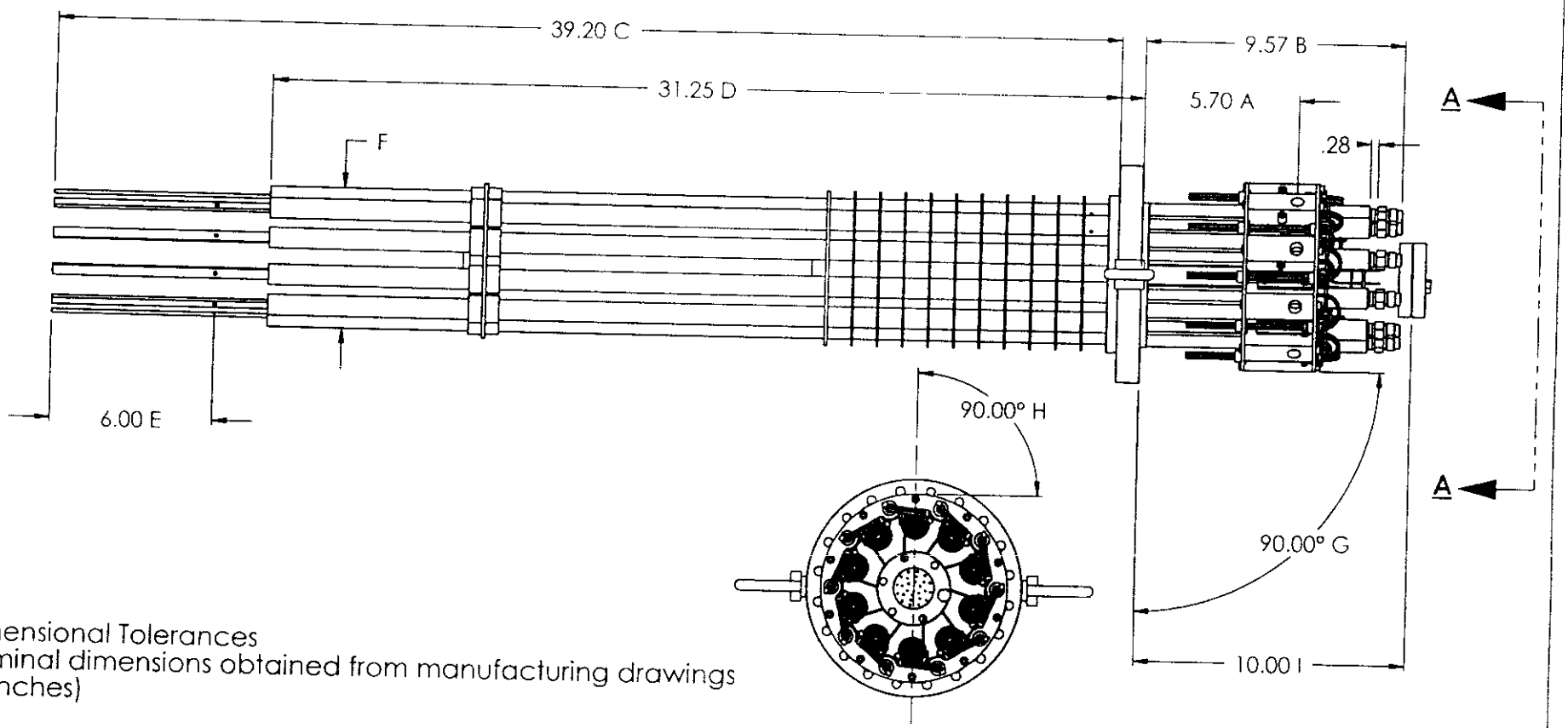

Dimensional Tolerances
Nominal dimensions obtained from manufacturing drawings
(in inches)

A (Top of flange to power cable connection) - Nominal +/- .10"
B (Top of flange to cooling gas outlets) - Nominal +/- .10"
C (Bottom of flange to end of busbar) - Nominal +/- .10"
D (Bottom of flange to end of G-10 insulating tube - Nominal +/- .10"
E (Bottom of busbar to voltage tap hole) - Nominal +/- .10"
F (Lead envelope outer diameter) - < 5.15 for 120 Amp lead < 5.10 for 600 Amp lead
G (Datum to conductor face orientation) - Perpendicular +/- .03"
H (Datum to conductor face orientation) - Perpendicular +/- .03"
I (Top of flange to split line of feedthrough (not required by LBNL) - +.10"/- .20"

PROPRIETARY INFORMATION
THE INFORMATION CONTAINED IN THIS DRAWING IS THE SOLE PROPERTY OF AMERICAN MAGNETICS, INC., OAK RIDGE, TN., 37830. ANY REPRODUCTION IN PART OR WHOLE WITHOUT THE WRITTEN PERMISSION OF AMERICAN MAGNETICS, INC. IS STRICTLY PROHIBITED.

TOLERANCES UNLESS OTHERWISE SPECIFIED	**AMERICAN MAGNETICS INC.**			
FRACTIONS ± 1/64 XX DECIMALS ± 0.01 XXX DECIMALS ± 0.005 ANGLES ± 0°-30' BREAK SHARP EDGES 1/64 MAX SURFACE FINISH = 63 RMS	AMI	DESCRIPTION **LBNL** 120 AMP VCCL DIMENSIONAL REQ'S		
UNLESS OTHERWISE SPECIFIED ALL DIMENSIONS ARE IN INCHES	DATE: 6/18/03	DRAWN BY: GJL	REVIEWED BY:	APPROVED BY:
	SCALE 1:6	SIZE A	DRAWING NO 03-9551-3006	SHEET 1 OF 1 REV 1

Jergens Cleveland, Ohio

Certificate of Proof Test

(1) Distinguishing Mark	(2) Description of Item Tested	(3) Quantity Tested	(4) Date Tested	(5) Load Applied	(6) Rated Load
KK	115-023456 HOIST RING	1	11/07/03	800 KG	400 KG

(7) Name and address of supplier: Jergens, Inc., 15700 S. Waterloo Rd., Cleveland, OH 44110

(8) Name and address of Company performing test: Jergens, Inc., 15700 S. Waterloo Rd., Cleveland, OH 44110

(9) Position of signatory in company: Quality Assurance Manager

We hereby certify that Jergens, Inc. Test Procedure 1001 requires all hoist rings to be proof tested and examined; and that this form is evidence that the test operator completed all procedures as required.

(Signature) James Klingenberg

FS

In substantial agreement with (OSHA) 29 CFR 1918 & 1919 Form NO. 4

Jergens Cleveland, Ohio

Certificate of Proof Test

(1) Distinguishing Mark	(2) Description of Item Tested	(3) Quantity Tested	(4) Date Tested	(5) Load Applied	(6) Rated Load
KK	115-023456 HOIST RING	1	11/07/03	800 KG	400 KG

(7) Name and address of supplier: Jergens, Inc., 15700 S. Waterloo Rd., Cleveland, OH 44110

(8) Name and address of Company performing test: Jergens, Inc., 15700 S. Waterloo Rd., Cleveland, OH 44110

(9) Position of signatory in company: Quality Assurance Manager

We hereby certify that Jergens, Inc. Test Procedure 1001 requires all hoist rings to be proof tested and examined; and that this form is evidence that the test operator completed all procedures as required.

(Signature) James Klingenberg

FS

In substantial agreement with (OSHA) 29 CFR 1918 & 1919 Form NO. 4

Jergens Cleveland, Ohio

Certificate of Proof Test

(1) Distinguishing Mark	(2) Description of Item Tested	(3) Quantity Tested	(4) Date Tested	(5) Load Applied	(6) Rated Load
KK	115-023456 HOIST RING	1	11/07/03	800 KG	400 KG

(7) Name and address of supplier: Jergens, Inc., 15700 S. Waterloo Rd., Cleveland, OH 44110

(8) Name and address of Company performing test: Jergens, Inc., 15700 S. Waterloo Rd., Cleveland, OH 44110

(9) Position of signatory in company: Quality Assurance Manager

We hereby certify that Jergens, Inc. Test Procedure 1001 requires all hoist rings to be proof tested and examined; and that this form is evidence that the test operator completed all procedures as required.

(Signature) James Klingenberg

FS

In substantial agreement with (OSHA) 29 CFR 1918 & 1919 Form NO. 4

Jergens Cleveland, Ohio

Certificate of Proof Test

(1) Distinguishing Mark	(2) Description of Item Tested	(3) Quantity Tested	(4) Date Tested	(5) Load Applied	(6) Rated Load
KK	115-023456 HOIST RING	1	11/07/03	800 KG	400 KG

(7) Name and address of supplier: Jergens, Inc., 15700 S. Waterloo Rd., Cleveland, OH 44110

(8) Name and address of Company performing test: Jergens, Inc., 15700 S. Waterloo Rd., Cleveland, OH 44110

(9) Position of signatory in company: Quality Assurance Manager

We hereby certify that Jergens, Inc. Test Procedure 1001 requires all hoist rings to be proof tested and examined; and that this form is evidence that the test operator completed all procedures as required.

(Signature) James Klingenberg

FS

In substantial agreement with (OSHA) 29 CFR 1918 & 1919 Form NO. 4

Current Lead Test Data Sheet

Current Lead Serial Number 4W 0116 B Dwg and Rev Number 03-9551-3005-R0

Test #	Test Title		Date	Technician

1 Dimensional Check

Dimension A

Lead #1	4 57/64	1-23-04	JACK
Lead #2	4 57/64		
Lead #3	4 7/8		
Lead #4	4 7/8		
Lead #5	4 57/64		
Lead #6	4 57/64		
Lead			
Lead			
Lead			
Lead			

Dimension B

Lead #1	9 21/32	1-23-04	JACK
Lead #2	9 21/32		
Lead #3	9 21/32		
Lead #4	9 21/32		
Lead #5	9 21/32		
Lead #6	9 21/32		
Lead			
Lead			
Lead			
Lead			

Dimension C

Lead #1	39 1/8	1-23-04	JACK
Lead #2	39 1/8		
Lead #3	39 1/8		
Lead #4	39 1/8		
Lead #5	39 1/8		
Lead #6	39 1/8		
Lead			
Lead			
Lead			
Lead			

Test #	Test Title		Date	Technician

Dimension D

Lead #1 30 19/64 — 1-23-04 — JACK
Lead #2 30 5/16
Lead #3 30 19/64
Lead #4 30 19/64
Lead #5 30 9/32
Lead #6 30 9/32
Lead
Lead
Lead
Lead

Dimension E

Lead #1 6 — 1-23-04 — JACK
Lead #2 6
Lead #3 6
Lead #4 6
Lead #5 6
Lead #6 6
Lead
Lead
Lead
Lead

Dimension F 5.074 — 1-23-04 — JACK

Dimension G

Lead #1 0 — 1-23-04 — JACK
Lead #2 0
Lead #3 1/64
Lead #4 1/64
Lead #5 1/64
Lead #6 0
Lead
Lead
Lead
Lead

Dimension H .007 — 1-23-04 — JACK

Test #	Test Title		Date	Technician
2	Pressure Test			
	Result (circle one)	Pass/Fail	1-20-04	RF
	Degradation of pressure?	NONE		
3	Leak Test			
	Result (circle one)	Pass/Fail	1-21-04	RF
	Leak rate achieved?	3.4×10^{-9}		
4	Voltage Isolation Test In Air			
	Result (circle one)	Pass/Fail	1-21-04	SB
	Isolation voltage achieved	2Kv / 4Kv		
5	Voltage Isolation Test In Dewar			
	Result (circle one)	Pass/Fail	1-29-04	BM
	Isolation voltage achieved	600V		
6	Full Current Test			
	Result (circle one)	Pass/Fail	1-29-04	BM
	Max voltage across lead			
	Lead			
	Lead			
	Lead			
	Lead			
	Lead			
	Lead			
	Lead			
	Lead			
	Lead			
	Lead			

Project Engineer

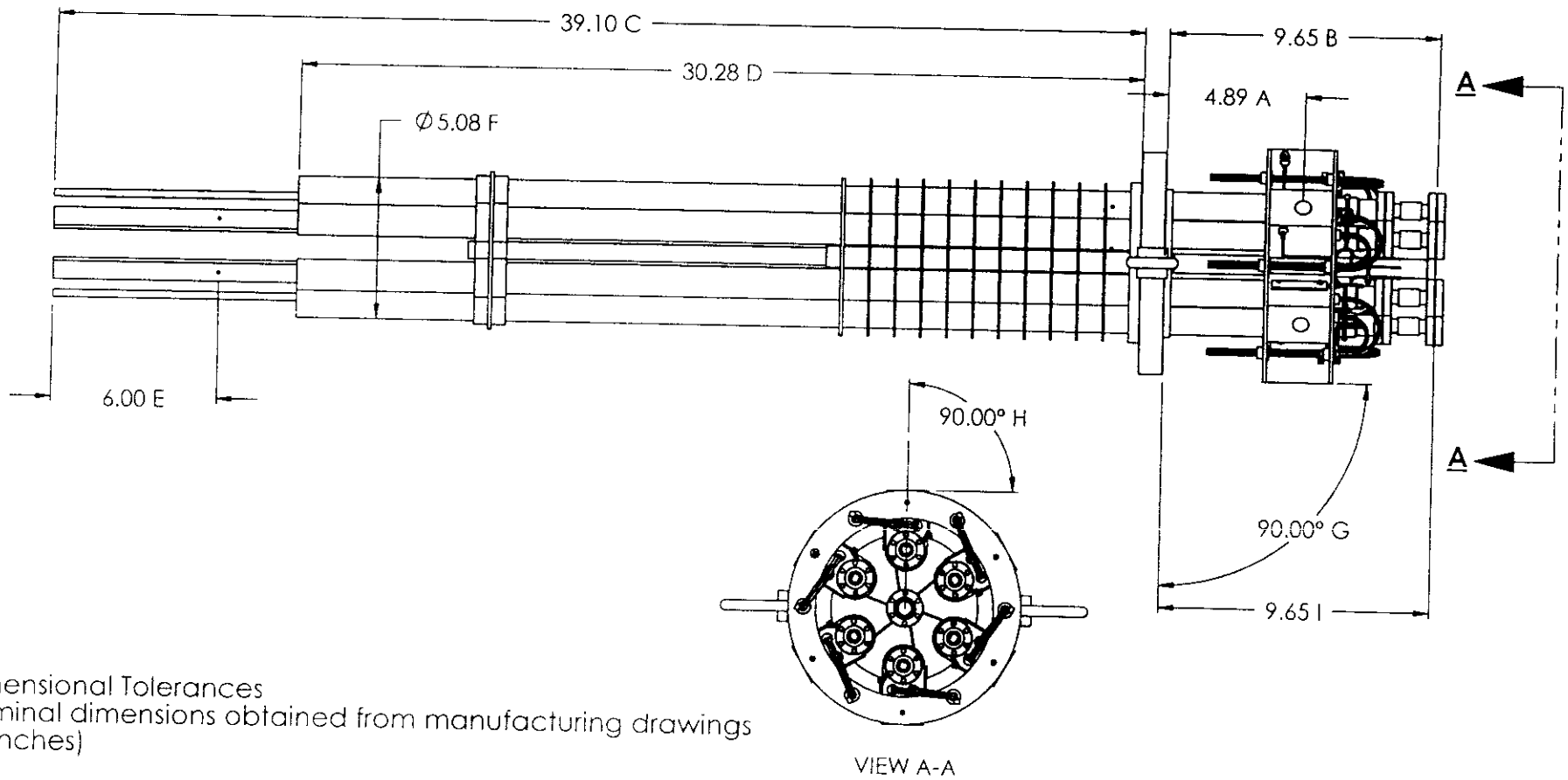

Dimensional Tolerances
Nominal dimensions obtained from manufacturing drawings
(in inches)

A (Top of flange to power cable connection) - Nominal +/- .10"
B (Top of flange to cooling gas outlets) - Nominal +/- .10"
C (Bottom of flange to end of busbar) - Nominal +/- .10"
D (Bottom of flange to end of G-10 insulating tube - Nominal +/- .10"
E (Bottom of busbar to voltage tap hole) - Nominal +/- .10"
F (Lead envelope outer diameter) - < 5.15 for 120 Amp lead < 5.10 for 600 Amp lead
G (Datum to conductor face orientation) - Perpendicular +/- .03"
H (Datum to conductor face orientation) - Perpendicular +/- .03"
I (Top of flange to split line of feedthrough (not required by LBNL) - +.10"/- .20"

PROPRIETARY INFORMATION
THE INFORMATION CONTAINED IN THIS DRAWING IS THE SOLE PROPERTY OF AMERICAN MAGNETICS, INC., OAK RIDGE, TN., 37830. ANY REPRODUCTION IN PART OR WHOLE WITHOUT THE WRITTEN PERMISSION OF AMERICAN MAGNETICS, INC. IS STRICTLY PROHIBITED.

TOLERANCES UNLESS OTHERWISE SPECIFIED	**AMERICAN MAGNETICS INC.**			
FRACTIONS ± 1/64 XX DECIMALS ± 0.01 XXX DECIMALS ± 0.005 ANGLES ± 0°-30' BREAK SHARP EDGES 1/64 MAX SURFACE FINISH = 63 RMS	AMI	DESCRIPTION **LBNL** 600 AMP VCCL DIMENSIONAL REQ'S		
UNLESS OTHERWISE SPECIFIED ALL DIMENSIONS ARE IN INCHES	DATE: 6/18/03	DRAWN BY: GJL	REVIEWED BY:	APPROVED BY:
	SCALE 1:6	SIZE A	DRAWING NO. 03-9551-3005	SHEET 1 OF 1	REV 0

Current Lead Test Data Sheet

Current Lead Serial Number 4W0116C Dwg and Rev Number 03-9551-3005-R0

Test #	Test Title		Date	Technician

1 Dimensional Check

Dimension A

Lead #7 4 57/64
Lead #8 4 57/64
Lead #9 4 57/64
Lead #10 4 57/64
Lead #11 4 57/64
Lead #12 4 29/32
Lead
Lead
Lead
Lead

1-23-04 JACK

Dimension B

Lead #7 9 21/32
Lead #8 9 21/32
Lead #9 9 21/32
Lead #10 9 21/32
Lead #11 9 21/32
Lead #12 9 21/32
Lead
Lead
Lead
Lead

1-23-04 JACK

Dimension C

Lead #7 39 9/64
Lead #8 39 1/8
Lead #9 39 5/32
Lead #10 39 1/8
Lead #11 39 5/32
Lead #12 39 3/32
Lead
Lead
Lead
Lead

1-23-04 JACK

Test #	Test Title		Date	Technician

Dimension D

Lead #7	30 5/16	1-23-04	JACK
Lead #8	30 19/64		
Lead #9	30 19/64		
Lead #10	30 9/32		
Lead #11	30 19/64		
Lead #12	30 19/64		
Lead			
Lead			
Lead			
Lead			

Dimension E

Lead #7	6	1-23-04	JACK
Lead #8	6		
Lead #9	6		
Lead #10	6		
Lead #11	6		
Lead #12	6		
Lead			
Lead			
Lead			
Lead			

Dimension F	5.080	1-23-04	JACK

Dimension G

Lead #7	0	1-23-04	JACK
Lead #8	1/64		
Lead #9	0		
Lead #10	0		
Lead #11	0		
Lead #12	1/64		
Lead			
Lead			
Lead			
Lead			

Dimension H	.003	1-23-04	JACK

Test #	Test Title		Date	Technician
2	Pressure Test			
	Result (circle one)	Pass/Fail	1-21-04	RF
	Degradation of pressure?	NONE		
3	Leak Test			
	Result (circle one)	Pass/Fail	1-22-04	RF
	Leak rate achieved?	4.2×10^{-9}		
4	Voltage Isolation Test In Air			
	Result (circle one)	Pass/Fail	1-22-04	SB
	Isolation voltage achieved	2Kv / 4Kv		
5	Voltage Isolation Test In Dewar			
	Result (circle one)	Pass/Fail	1-24-04	BM
	Isolation voltage achieved	600V		
6	Full Current Test			
	Result (circle one)	Pass/Fail	1-29-04	BM
	Max voltage across lead			
	Lead			
	Lead			
	Lead			
	Lead			
	Lead			
	Lead			
	Lead			
	Lead			
	Lead			
	Lead			

Project Engineer

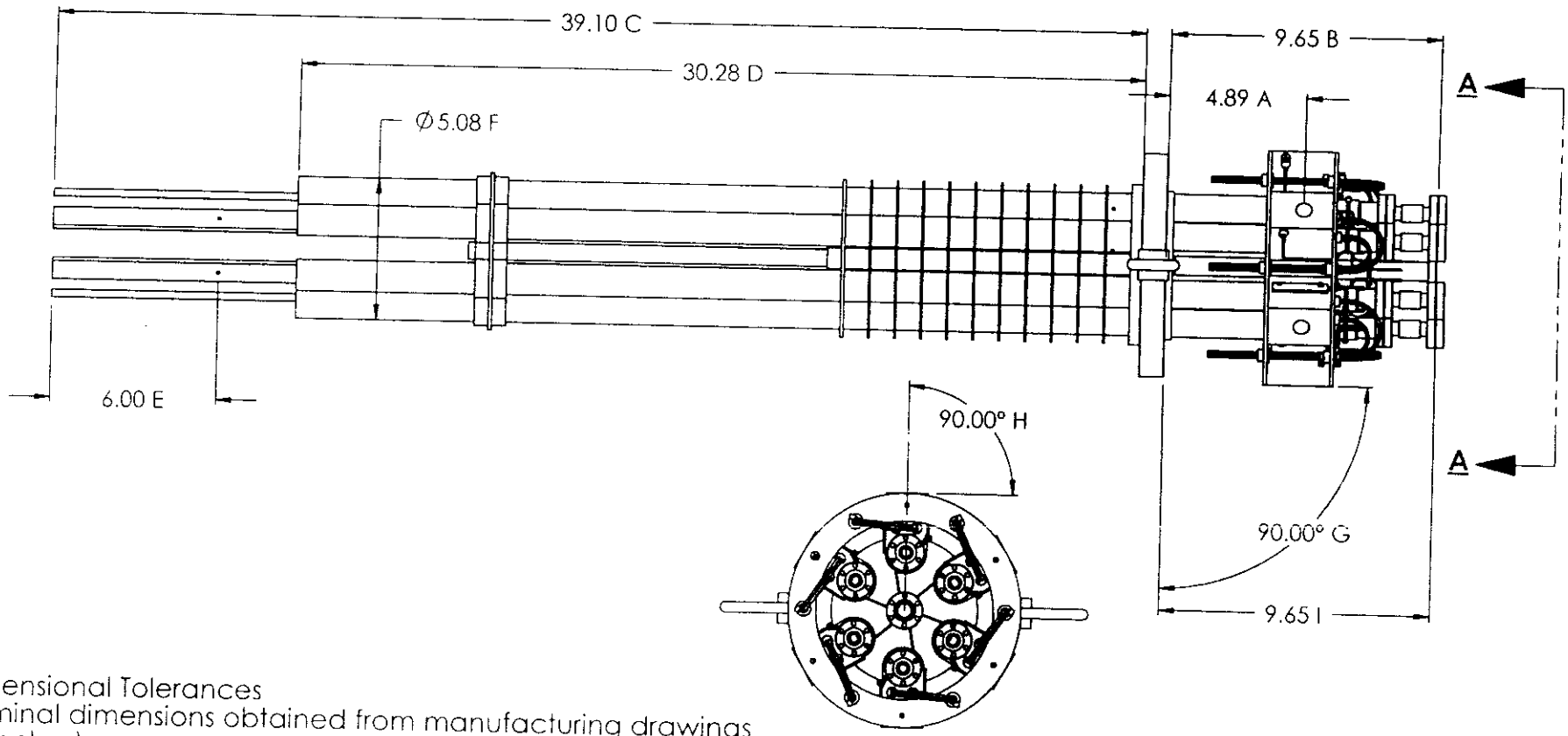

VIEW A-A

Dimensional Tolerances
Nominal dimensions obtained from manufacturing drawings
(in inches)

A (Top of flange to power cable connection) - Nominal +/- .10"
B (Top of flange to cooling gas outlets) - Nominal +/- .10"
C (Bottom of flange to end of busbar) - Nominal +/- .10"
D (Bottom of flange to end of G-10 insulating tube - Nominal +/- .10"
E (Bottom of busbar to voltage tap hole) - Nominal +/- .10"
F (Lead envelope outer diameter) - < 5.15 for 120 Amp lead < 5.10 for 600 Amp lead
G (Datum to conductor face orientation) - Perpendicular +/- .03"
H (Datum to conductor face orientation) - Perpendicular +/- .03"
I (Top of flange to split line of feedthrough (not required by LBNL) - +.10"/- .20"

PROPRIETARY INFORMATION
THE INFORMATION CONTAINED IN THIS DRAWING IS THE SOLE PROPERTY OF AMERICAN MAGNETICS, INC., OAK RIDGE, TN., 37830. ANY REPRODUCTION IN PART OR WHOLE WITHOUT THE WRITTEN PERMISSION OF AMERICAN MAGNETICS, INC. IS STRICTLY PROHIBITED.

TOLERANCES UNLESS OTHERWISE SPECIFIED	**AMERICAN MAGNETICS INC.**			
FRACTIONS ± 1/64 XX DECIMALS ± 0.01 XXX DECIMALS ± 0.005 ANGLES ± 0°-30' BREAK SHARP EDGES 1/64 MAX SURFACE FINISH = 63 RMS	AMI	DESCRIPTION **LBNL** 600 AMP VCCL DIMENSIONAL REQ'S		
UNLESS OTHERWISE SPECIFIED ALL DIMENSIONS ARE IN INCHES	DATE: 6/18/03	DRAWN BY: GJL	REVIEWED BY:	APPROVED BY:
	SCALE 1:6	SIZE A	DRAWING NO 03-9551-3005	SHEET 1 OF 1 REV 0

Current Lead Test Data Sheet

Current Lead Serial Number 4W0116 D Dwg and Rev Number 03-9551-3005-R0

Test #	Test Title		Date	Technician

1 Dimensional Check

Dimension A

Lead #13 4 57/64 1-26-04 JACK
Lead #14 4 57/64
Lead
Lead
Lead
Lead
Lead
Lead
Lead
Lead

Dimension B

Lead #13 9 21/32 1-26-04 JACK
Lead #14 9 21/32
Lead
Lead
Lead
Lead
Lead
Lead
Lead
Lead

Dimension C

Lead #13 39 5/32 1-26-04 JACK
Lead #14 39 1/8
Lead
Lead
Lead
Lead
Lead
Lead
Lead
Lead

Test #	Test Title		Date	Technician

Dimension D

Lead #13 30 9/32 — 1-26-04 — JACK
Lead #14 30 9/32
Lead
Lead
Lead
Lead
Lead
Lead
Lead
Lead

Dimension E

Lead #13 6 — 1-26-04 — JACK
Lead #14 6
Lead
Lead
Lead
Lead
Lead
Lead
Lead
Lead

Dimension F N/A — 1-26-04 — JACK

Dimension G

Lead #13 0 — 1-26-04 — JACK
Lead #14 1/64
Lead
Lead
Lead
Lead
Lead
Lead
Lead
Lead

Dimension H .001 — 1-26-04 — JACK

Test #	Test Title		Date	Technician
2	Pressure Test			
	Result (circle one)	Pass/Fail	1-22-04	RF
	Degradation of pressure?	NONE		
3	Leak Test			
	Result (circle one)	Pass/Fail	1-23-04	RF
	Leak rate achieved?	3.5×10^{-9}		
4	Voltage Isolation Test in Air			
	Result (circle one)	Pass/Fail	1-23-04	SB
	Isolation voltage achieved	2Kv / 4Kv		
5	Voltage Isolation Test in Dewar			
	Result (circle one)	Pass/Fail	1-29-04	BM
	Isolation voltage achieved	600V		
6	Full Current Test			
	Result (circle one)	Pass/Fail	1-29-04	BM
	Max voltage across lead			
	Lead			
	Lead			
	Lead			
	Lead			
	Lead			
	Lead			
	Lead			
	Lead			
	Lead			
	Lead			

Project Engineer

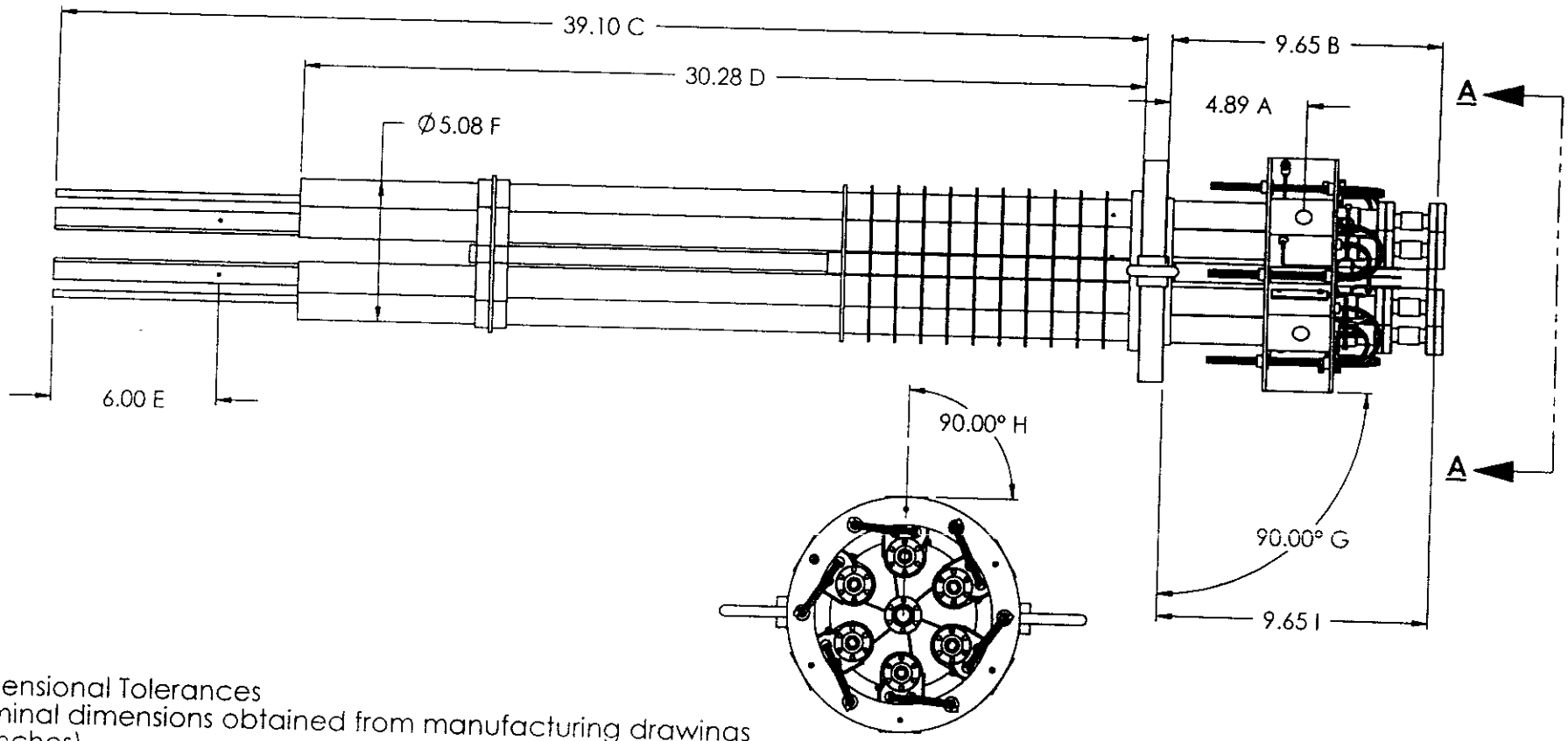

VIEW A-A

Dimensional Tolerances
Nominal dimensions obtained from manufacturing drawings
(in inches)

A (Top of flange to power cable connection) - Nominal +/- .10"
B (Top of flange to cooling gas outlets) - Nominal +/- .10"
C (Bottom of flange to end of busbar) - Nominal +/- .10"
D (Bottom of flange to end of G-10 insulating tube - Nominal +/- .10"
E (Bottom of busbar to voltage tap hole) - Nominal +/- .10"
F (Lead envelope outer diameter) - < 5.15 for 120 Amp lead < 5.10 for 600 Amp lead
G (Datum to conductor face orientation) - Perpendicular +/- .03"
H (Datum to conductor face orientation) - Perpendicular +/- .03"
I (Top of flange to split line of feedthrough (not required by LBNL) - +.10"/- .20"

PROPRIETARY INFORMATION
THE INFORMATION CONTAINED IN THIS DRAWING IS THE SOLE PROPERTY OF AMERICAN MAGNETICS, INC., OAK RIDGE, TN., 37830. ANY REPRODUCTION IN PART OR WHOLE WITHOUT THE WRITTEN PERMISSION OF AMERICAN MAGNETICS, INC. IS STRICTLY PROHIBITED.

TOLERANCES UNLESS OTHERWISE SPECIFIED	**AMERICAN MAGNETICS INC.**			
FRACTIONS ± 1/64 XX DECIMALS ± 0.01 XXX DECIMALS ± 0.005 ANGLES ± 0°-30' BREAK SHARP EDGES 1/64 MAX SURFACE FINISH = 63 RMS	AMI	DESCRIPTION **LBNL** 600 AMP VCCL DIMENSIONAL REQ'S		
UNLESS OTHERWISE SPECIFIED ALL DIMENSIONS ARE IN INCHES	DATE: 6/18/03	DRAWN BY: GJL	REVIEWED BY:	APPROVED BY:
	SCALE 1:6	SIZE A	DRAWING NO. 03-9551-3005	SHEET 1 OF 1	REV 0