MQXB

Job No.: 335

Project/Task No. 300/1.1.3.1.8

Series: MQXB

Serial No: MQX2001

Rework ID: 0

Specification No.: 333756

Revision: None

Place Face Down For Scanning!!!

MQX2001-0

MQXB

LHC DFBX Instrument Duct Weldment & Wiring Assembly

333756 /Rev. None

MQX2001-0

Fermi National Accelerator Laboratory
Batavia, IL 60510

LHC DFBX INSTRUMENT DUCT (MQX2) WELDMENT & WIRING ASSEMBLY

Reference Drawing(s):
LHC DFBX Instrument Duct Weldment & Wiring Assembly ME-418180

Project # / Task #: 300/1.1.3.1.8	**Job #: 335**
Released by: Bob Jensen	**Magnet/Device Series: MQXB**
Date: 1/15/04 8:30:03 AM	**Scan Pages: 25**
Prepared by: B. Jensen	

Title	Signature	Date
TD / E&F Process Engineering	*Bob Jensen* Bob Jensen / Designee	1/9/04
TD / D&T Assembly	*Dan Eddy* Dan Eddy / Designee	1/12/04
TD / D&T Fabrication Manager	*Fred Lewis* Fred Lewis / Designee	1/9/04
TD / D&T Project Engineer	*Clark Reid* Tom Peterson / Designee	1/13/04

Revision Page

Revision	Step No.	Revision Description	TRR No.	Date
None	N/A	Initial Release	N/A	1/9/04

Ensure appropriate memos and specific instructions are placed with the traveler before issuing the sub traveler binder to production.

1.0 General Notes

1.1 White (Lint Free) Gloves (Fermi stock 2250-1800) or Surgical Latex Gloves (Fermi stock 2250-2494) shall be worn by all personnel when handling all product parts after the parts have been prepared/cleaned.

1.2 All steps that require a sign-off shall include the Technician/Inspectors first initial and full last name.

1.3 No erasures or white out will be permitted to any documentation. All incorrectly entered data shall be corrected by placing a single line through the error, initial and date the error before adding the correct data.

1.4 All Discrepancy Reports issued shall be recorded in the left margin next to the applicable step.

1.5 Personnel shall perform all tasks in accordance with current applicable ES&H guidelines and those specified within the step.

2.0 Parts Kit List

2.1 No Parts Kit required.

3.0 Assembly & Welding

3.1 Acquire the following components and complete the assembly by welding components together in accordance with Dwg ME-418180.

Note: All components must be thoroughly cleaned with Isopropyl Alcohol (Fermi stock 1920-0300) or approved equivalent prior to welding.

MB-418173	Top Plate – Closure Flange	1 ea
MC-418164	Flex Hose Assembly (MQX2)	1 ea
MB-418142	Lateral Fitting	1 ea
MB-418175	Q3 Interconnect Flange	1 ea
Item #5	Tube, 1" O.D. x 0.049" x 9 13/16" long	1 ea
Item #6	Tube ¾" O.D. x 0.049" x 2 ½" long	1 ea

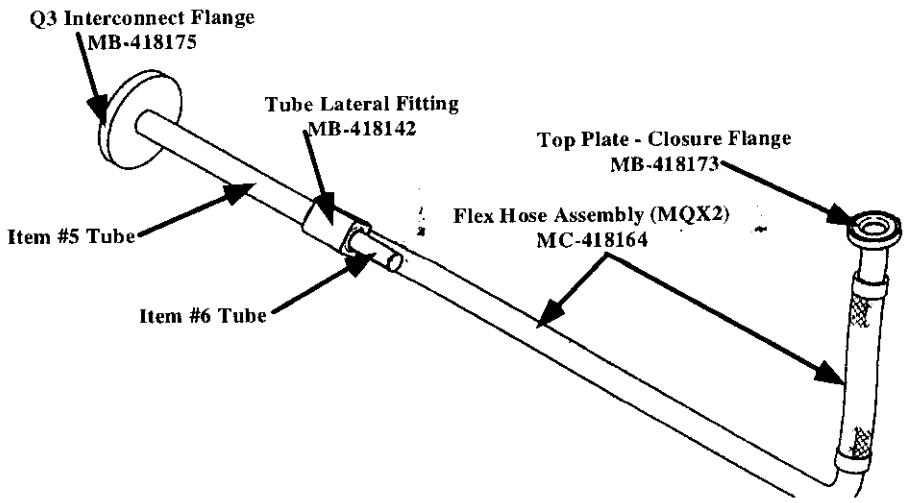

Note: Clark Reid took the conduit piping parts and drawings to the village weld shop where they were welded up as an assembly. Tom Peterson, March 19, 2004

Technician(s) _____ Date _____

3.2 Perform a Vacuum Leak Check of the DFBX Tube Assembly and record results below.

PART NO.		SCALE UNITS BEFORE HELIUM PROBE	SCALE UNITS WHILE ENCLOSURE FLOODING	DETERMINATION OF MINIMUM DETECTABLE LEAK				
DATE TIME	OPERATOR'S LAST NAME			MDS ÷ ((Response -Bckgnd) ÷ Leak Value) = MDL				

Cold Shocked 12-28-03 Pm

Inspector _____ Date _____

Device Serial No. MQX2001-0
Notes:

3.3 Stamp the serial number from the bottom of this traveler using approved methods onto the DFBX Instrument Duct Weldment & Wiring Assembly as shown below.

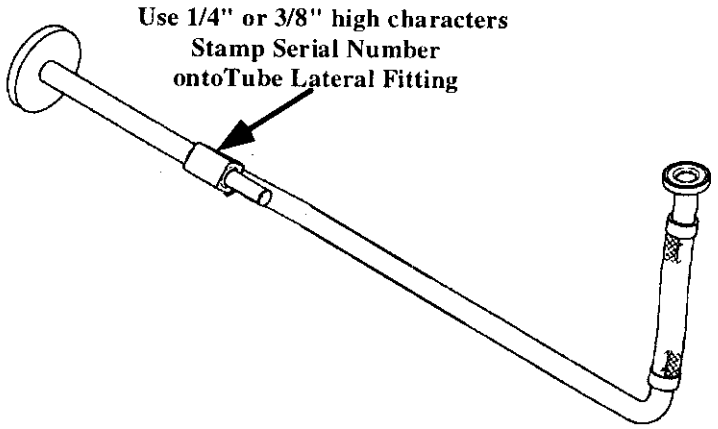

Technician(s) _____ Date _____

Note: MQX2 001 was built and delivered to Mayer Tool before we began stamping numbers on them. It is the only conduit which is not stamped with its number on the "Y" fitting.

Tom Peterson 3 March 04

4.0 Wire Harness Assembly

4.1 Process and assemble the following wire packages in accordance with Dwg ME-418180.

Note: Each individual wire must be labeled prior to assembly into Q3-DFBX connector, as per attached spreadsheet.
Labeling should be ~ 3" from connector.
Labeling should be ~14" from non-connector end and installed after wire bundle is inserted into Instrument Duct. (See Step 4.5)

Note: ~ 1 twist/ 3 in –individual cables are 9 foot in length prior to twisting.

Item	Color	Gauge	Description	Wire Count	Spares	Completed by Technician
#11	Red	20	Quench Protection Twisted	16 wires (8 – Twisted Pairs)	2 pair	D.E.
#12	Red	20	Warm-Up Heaters Twisted	16 wires (8 – Twisted Pairs)	None	D.E.
#13	Orange	26	Quad Voltage Taps Twisted	24 wires (Twisted as bundle)	2 spares	D.E.
#14	Orange	26	Corrector Voltage Taps **(Not Twisted)**	12 wires (1 bundle – not twisted)	2 spare	D.E
#15	Gold	30	Temperature Sensors Twisted 4 wire Pairs	32 wires (8 – bundles)	1 spare	D.E.

Q3 connector (non-ip, or non-lead end) for Q3-DFBX connection. Completed 11-20-03.

Module	Pin	CERN Label	Description	Technician Connector End	Technician Non Connector End
M1	1		Blank Module		
M1	2				
M1	3				
M1	4				
M1	5				
M2	1	EE1111	Q1 Lead Voltage Tap "a" , primary		
M2	2	EE1121	Q1 Lead Voltage Tap "a", redundant		
M2	3	EE1211	Q1 Center Voltage Tap "c", primary		
M2	4	EE1221	Q1 Center Voltage Tap "c", redundant		
M2	5	EE1311	Q1 Lead Voltage Tap "b", primary		
M3	1	EE1222	Q2a Center Voltage Tap "c" , redundant		
M3	2	EE1212	Q2a Center Voltage Tap "c" , primary		
M3	3	EE1122	Q2a Lead Voltage Tap "a", redundant		
M3	4	EE1112	Q2a Lead Voltage Tap "a", primary		
M3	5	EE1321	Q1 Lead Voltage Tap "b",redundant		
M4	1	EE1312	Q2a Lead Voltage Tap "b", primary		
M4	2	EE1322	Q2a Lead Voltage Tap "b", redundant		
M4	3	EE1612	Q2b Lead Voltage Tap "b", primary		
M4	4	EE1622	Q2b Lead Voltage Tap "b", redundant		
M4	5	EE1512	Q2b Center Voltage Tap "c" , primary		
M5	1	EE1123	Q3 Lead Voltage Tap "a", redundant		
M5	2	EE1113	Q3 Lead Voltage Tap "a", primary		
M5	3	EE1422	Q2b Lead Voltage Tap "a", redundant		
M5	4	EE1412	Q2b Lead Voltage Tap "a", primary		
M5	5	EE1522	Q2b Center Voltage Tap "c" , redundant		
M6	1	EE1213	Q3 Center Voltage Tap "c" , primary		
M6	2	EE1223	Q3 Center Voltage Tap "c" , redundant		
M6	3	EE1313	Q3 Lead Voltage Tap "b" , primary		
M6	4	EE1323	Q3 Lead Voltage Tap "b" , redundant		
M6	5	Empty	No connection		
M7	1		Blank Module		
M7	2				
M7	3				
M7	4				
M7	5				
M8	1	EE8121	Corrector voltage tap Q1-H1 (skew dipole) (on MCBX, MCBXH, A+ lead)		
M8	2	EE8111	Corrector voltage tap Q1-V1 (normal dipole) (on MCBX, MCBXV A+ lead)		
M8	3	EE8122	Corrector voltage tap Q2-H2 (skew dipole) (on MCBX, MCBXH, A+ lead)		
M8	4	EE8112	Corrector voltage tap Q2-V2 (normal dipole) (on MCBX, MCBXV, A+ lead)		
M8	5	Empty	No connection		
M9	1	EE8123	Corrector voltage tap Q3-H3 (skew dipole) (on MCBXA, MCBXH, A+ lead)		
M9	2	EE8113	Corrector voltage tap Q3-V3 (normal dipole) (on MCBXA, MCBXV, A+ lead)		
M9	3	EE8223	Corrector voltage tap Q3-A2 (skew quadrupole) (on MQSX, MQSX, A+ lead)		
M9	4	EE8323	Corrector voltage tap Q3-A3 (skew sextupole) (on MCSOX, MCSSX, A+ lead)		
M9	5	Empty	No Connection		

Q3 connector (non-ip, or non-lead end) for Q3-DFBX connection. Completed 11-20-03.

Module	Pin	CERN Label	Description	Technician Connector End	Technician Connector End
M10	1	EE8313	Corrector voltage tap Q3-B3 (normal sextupole)(on MCBXA, MCSX, A+ lead)		
M10	2	EE8423	Corrector voltage tap Q3-A4 (skew octupole) (on MCSOX, MCOSX, A+ lead)		
M10	3	EE8413	Corrector voltage tap Q3-B4 (normal octupole) (on MCSOX, MCOX, A+ lead)		
M10	4	EE8613	Corrector voltage tap Q1-B6 (normal dodecapole) (on MCBXA, MCTX, A+ lead)		
M10	5	Empty	No Connection		
M11	1		Blank Module		
M11	2				
M11	3				
M11	4				
M11	5				
M12	1	EH8311+	Q1 Cryogenic Heater lead end - wire at top (CERN #1 I+)		
M12	2	EH8311-	Q1 Cryogenic Heater lead end - wire at bottom (CERN #1 I-)		
M12	3	EH8321+	Q1 Cryogenic Heater non-lead end - wire at top (CERN #2 I+)		
M12	4	EH8321-	Q1 Cryogenic Heater non-lead end - wire at bottom (CERN #2 I-)		
M12	5	Empty	No Connection		
M13	1	EH8312+	Q2A Cryogenic Heater lead end - wire toward cold mass end plate (CERN #1 I+)		
M13	2	EH8312-	Q2A Cryogenic Heater lead end - wire toward cold mass mag center (CERN #1 I-)		
M13	3	EH8322+	Q2A Cryogenic Heater non-lead end- wire toward cold mass end plate (CERN #2 I+)		
M13	4	EH8322-	Q2A Cryogenic Heater non-lead end- wire toward cold mass mag center (CERN #2 I-)		
M13	5	Empty	No connection		
M14	1	EH8332+	Q2B Cryogenic Heater lead end - wire toward cold mass end plate (CERN #1 I+)		
M14	2	EH8332-	Q2B Cryogenic Heater lead end - wire toward cold mass mag center (CERN #1 I-)		
M14	3	EH8342+	Q2B Cryogenic Heater non-lead end- wire toward cold mass end plate (CERN #2 I+)		
M14	4	EH8342-	Q2B Cryogenic Heater non-lead end- wire toward cold mass mag center (CERN #2 I-)		
M14	5	Empty	No connection		
M15	1	EH8313+	Q3 Cryogenic Heater lead end - wire at top (CERN #1 I+)		
M15	2	EH8313-	Q3 Cryogenic Heater lead end - wire at bottom (CERN #1 I-)		
M15	3	EH8323+	Q3 Cryogenic Heater non-lead end - wire at top (CERN #2 I+)		
M15	4	EH8323-	Q3 Cryogenic Heater non-lead end - wire at bottom (CERN #2 I-)		
M15	5	Empty	No Connection		
M16	1		Blank Module		
M16	2				
M16	3				
M16	4				
M16	5				
M17	1	YT1111+	Q1 Protection (Strip) Heater, ("a" circuit) (CERN lead #1+)		
M17	2	Empty	No connection		
M17	3	YT1111-	Q1 Protection (Strip) Heater, ("a" circuit) (CERN lead #1-)		
M17	4	Empty	No connection		
M17	5	YT1121+	Q1 Protection (Strip) Heater, ("b" circuit) (CERN lead #2+)		
M18	1	Empty	No connection		
M18	2	YT1112+	Q2a Protection (Strip) Heater, 1-4 & 2-3 circuit (FNAL lead A+) (CERN lead #1+)		
M18	3	Empty	No connection		
M18	4	YT1121-	Q1 Protection (Strip) Heater, ("b" circuit) (CERN lead #2-)		
M18	5	Empty	No connection		

Q3 connector (non-ip, or non-lead end) for Q3-DFBX connection. Completed 11-20-03.

Module	Pin	CERN Label	Description	Technician Connector End	Technician Non Connector End
M19	1	YT1112-	Q2a Protection (Strip) Heater, 1-4 & 2-3 circuit (FNAL lead A-) (CERN lead #1-)		
M19	2	Empty	No connection		
M19	3	YT1122+	Q2a Protection (Strip) Heater, 1-2 & 3-4 circuit (FNAL lead B+) (CERN lead#2+)		
M19	4	Empty	No connection		
M19	5	YT1122-	Q2a Protection (Strip) Heater, 1-2 & 3-4 circuit (FNAL lead B-) (CERN lead #2-)		
M20	1	Empty	No connection		
M20	2	YT1132-	Q2b Protection (Strip) Heater, 1-4 & 2-3 circuit (FNAL lead A-) (CERN lead #1-)		
M20	3	Empty	No connection		
M20	4	YT1132+	Q2b Protection (Strip) Heater, 1-4 & 2-3 circuit (FNAL lead A+) (CERN lead #1+)		
M20	5	Empty	No connection		
M21	1	YT1142+	Q2b Protection (Strip) Heater, 1-2 & 3-4 circuit (FNAL lead B+) (CERN lead#2+)		
M21	2	Empty	No connection		
M21	3	YT1142-	Q2b Protection (Strip) Heater, 1-2 & 3-4 circuit (FNAL lead B-) (CERN lead #2-)		
M21	4	Empty	No Connection		
M21	5	YT1113+	Q3 Protection (Strip) Heater, ("a" circuit) (CERN lead #1+)		
M22	1	Empty	No Connection		
M22	2	YT1123+	Q3 Protection (Strip) Heater, ("b" circuit) (CERN lead #2+)		
M22	3	Empty	No Connection		
M22	4	YT1113-	Q3 Protection (Strip) Heater, ("a" circuit) (CERN lead #1-)		
M22	5	Empty	No Connection		
M23	1	YT1123-	Q3 Protection (Strip) Heater, ("b" circuit) (CERN lead #2-)		
M23	2	Empty	No Connection		
M23	3	Empty	No Connection		
M23	4	Empty	No Connection		
M23	5	Empty	No Connection		
M24	1		Blank Module		
M24	2				
M24	3				
M24	4				
M24	5				
M25	1	TT8311 I+	Q1 RTD, primary Wire color: Yellow		
M25	2	TT8311 I-	Q1 RTD, primary Wire color: Green		
M25	3	TT8311 U+	Q1 RTD, primary Wire color: Black		
M25	4	TT8311 U-	Q1 RTD, primary Wire color: Red		
M25	5	TT8321 I+	Q1 RTD, redundant: Wire color: Yellow		
M25	6	TT8321 I-	Q1 RTD, redundant: Wire color: Green		
M25	11	TT8321 U+	Q1 RTD, redundant: Wire color: Black		
M25	10	TT8321 U-	Q1 RTD, redundant: Wire color: Red		
M25	9	TT8312 I+	Q2a RTD, primary Wire color: Yellow		
M25	8	TT8312 I-	Q2a RTD, primary Wire color: Green		
M25	7	TT8312 U+	Q2a RTD, primary Wire color: Black		
M25	12	TT8312 U-	Q2a RTD, primary Wire color: Red		
M25	13	TT8322 I+	Q2a RTD, redundant: Wire color: Yellow		
M25	14	TT8322 I-	Q2a RTD, redundant: Wire color: Green		
M25	15	TT8322 U+	Q2a RTD, redundant: Wire color: Black		
M25	16	TT8322 U-	Q2a RTD, redundant: Wire color: Red		
M25	17	Empty	No connection		

Note: Pin numbers of module M25 are not listed in numerical order

Q3 connector (non-ip, or non-lead end) for Q3-DFBX connection. Completed 11-20-03.

Note: Pin numbers of module M26 are not listed in numerical order

Module	Pin	CERN Label	Description	Technician Connector End	Technician Connector End
M26	1	TT8332 I+	Q2b RTD, primary Wire color: Yellow		
M26	2	TT8332 I-	Q2b RTD, primary Wire color: Green		
M26	3	TT8332 U+	Q2b RTD, primary Wire color: Black		
M26	4	TT8332 U-	Q2b RTD, primary Wire color: Red		
M26	5	TT8342 I+	Q2b RTD, redundant: Wire color: Yellow		
M26	6	TT8342 I-	Q2b RTD, redundant: Wire color: Green		
M26	11	TT8342 U+	Q2b RTD, redundant: Wire color: Black		
M26	10	TT8342 U-	Q2b RTD, redundant: Wire color: Red		
M26	9	TT8313 I+	Q3 RTD, primary Wire color: Yellow		
M26	8	TT8313 I-	Q3 RTD, primary Wire color: Green		
M26	7	TT8313 U+	Q3 RTD, primary Wire color: Black		
M26	12	TT8313 U-	Q3 RTD, primary Wire color: Red		
M26	13	TT8323 I+	Q3 RTD, redundant: Wire color: Yellow		
M26	14	TT8323 I-	Q3 RTD, redundant: Wire color: Green		
M26	15	TT8323 U+	Q3 RTD, redundant: Wire color: Black		
M26	16	TT8323 U-	Q3 RTD, redundant: Wire color: Red		
M26	17	Empty	No connection		

Hypertronics Connector Pin Locations Q3 non-lead (non-ip) end.
VIEW: Female (pin) solder cup side

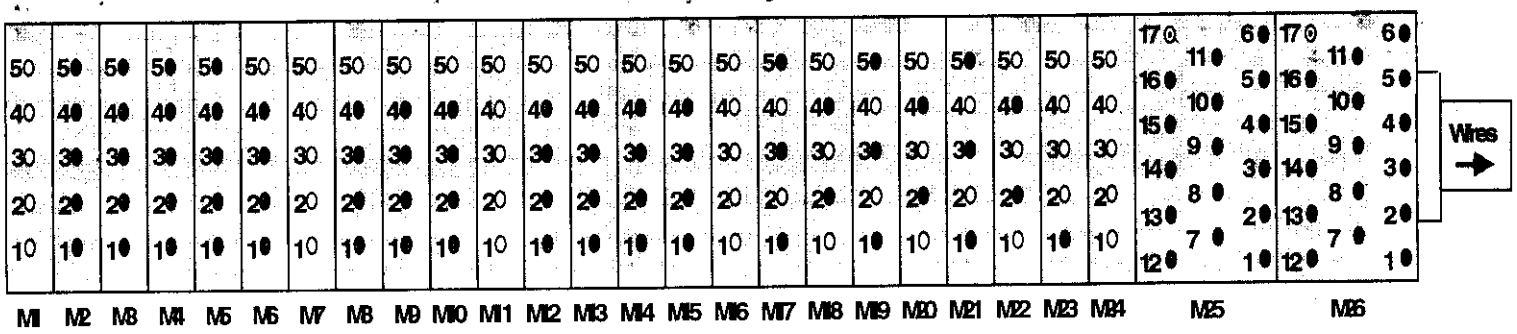

- ● Hole filled in grey: Wire soldered to pin.
- ⊙ Hole with dot in center: Pin exists but no wire soldered to it.
- ○ Hole filled in white: No pin. Hole is drilled out.

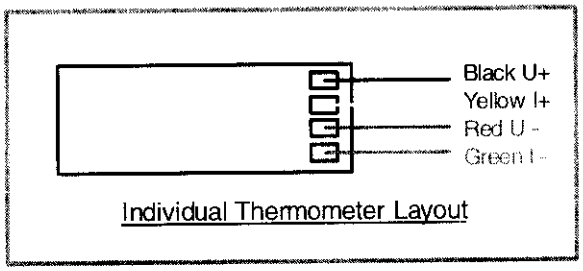

D. Eddy
Technician(s)

1/22/04
Date

Device Serial No. MQX2001-0
Notes:

4.2 Assemble the wire packages and secure into a bundle.

D. Eddy
Technician(s)

1/22/04
Date

4.3 Terminate ends of the wire bundle and install them into the Q3-DFBX Connector – 28 unit (MB-418106) using the following parts:

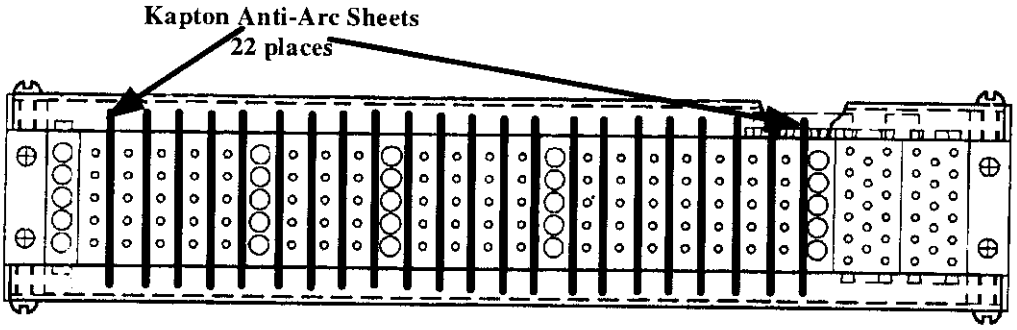

Q3-DFBX Connector
MA-418106

MA-418097	Blank 5 Pin #LAHT	5 ea
MA-418095	Female 5 Pin #LAMSTH	19 ea
MA-419099	Female 17 Pin #LDMSTH	2 ea
MA-418103	Plastic Block #YHD0027	50ea
MA-418104	End Part #YEC0076C	2 ea
MA-418102	Mounting Rail #YSR0028Z	2 ea
MA-418195	Screw, M-3	4 ea.

Note: Install Kapton Anti-Arc Sheets in position noted above as wires are being terminated to connector.

D. Eddy
Technician(s)

1/22/04
Date

4.4 Install wire package into DFBX Duct Assembly.

D. Eddy
Technician(s)

1/22/04
Date

4.5 Label the non-connector end wires ~ 14" from the end of each wire.

Note: See Step 4.1 for labeling spreadsheet.

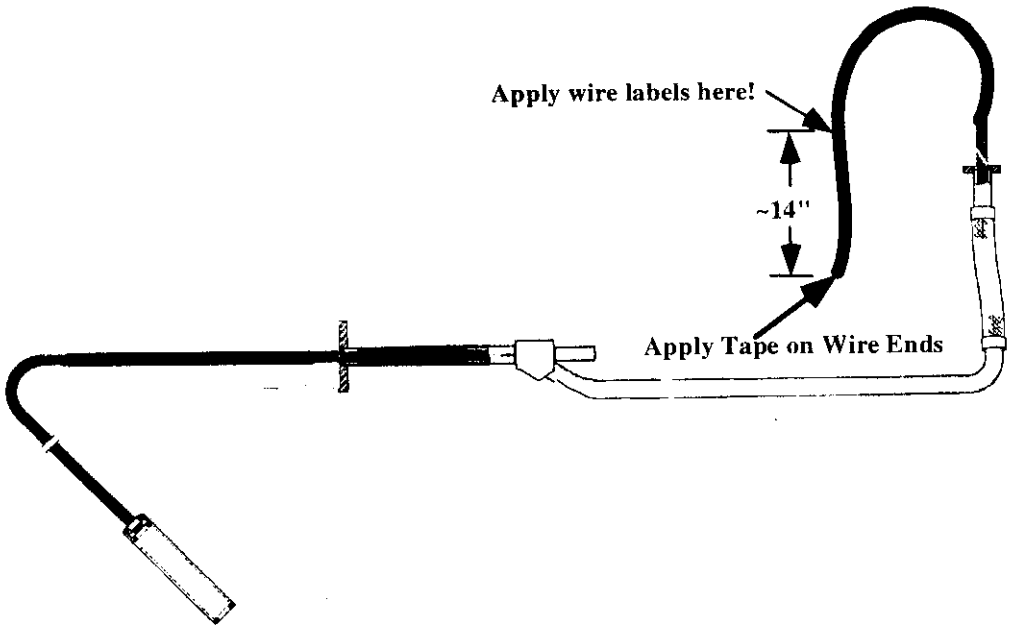

D. Eddy
Technician(s)

1/22/04
Date

4.6 Prepare the wire bundle for hipotting by performing the following:

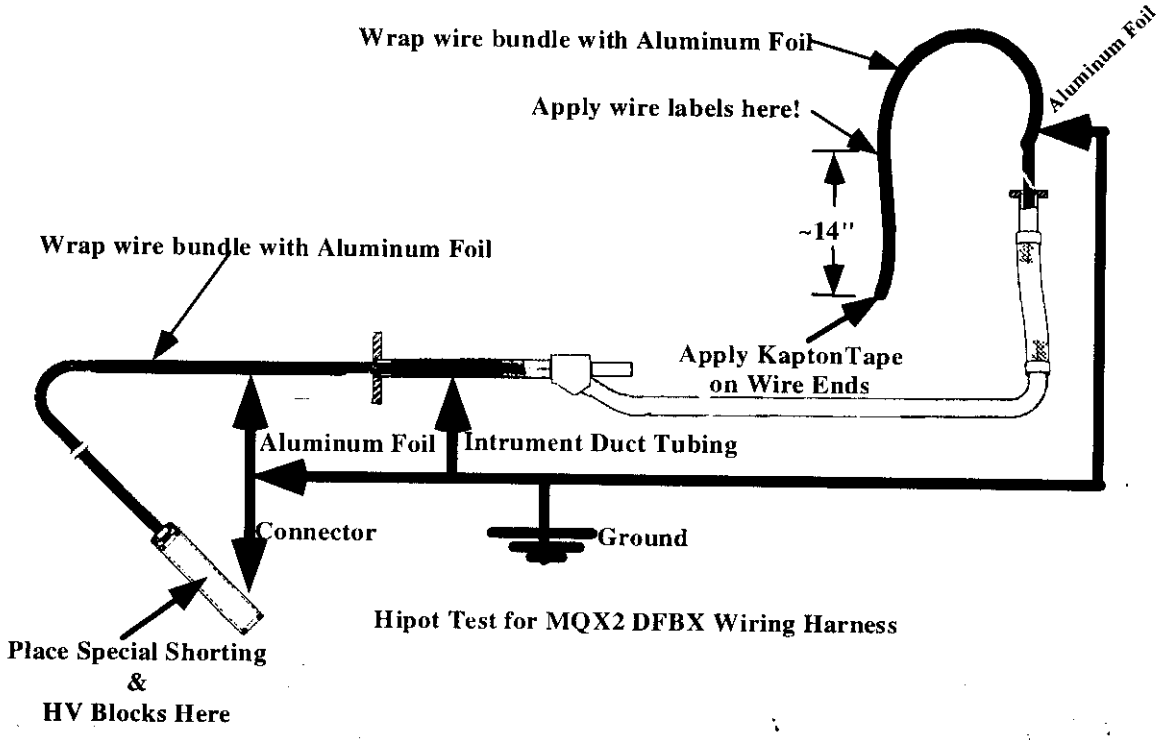

4.6.1	Check for continuity between all wire and for shorts between each pin and all other pins of the RTD's.	☑
4.6.2	Ground Outer Tube	☑
4.6.3	Place Kapton Tape on wire ends to prevent shorting.	☑
4.6.4	Install Connector & Access Cover (MB-418067).	☑
4.6.5	Wrap entire lengths of excess wire extending out from both ends of the tube with aluminum foil.	☑
4.6.6	Wrap wire around both ends of the tube extending over the foil to make a connection between foil and tube.	☑
4.6.7	Using the special Hypertronic HV Modules and Hipot Form, attach High Voltage from HV Power Supply to First set or group of wires to be tested.	☑
4.6.8	Follow Hipot Form until all Hipots are completed (See Step 4.5).	☑
4.6.9	If wire(s) fail Hipot, determine which one(s) are bad, remove from the tube and install new one(s).	☑
4.6.10	After Hipot is determined good, remove aluminum foil and attach wire.	☑

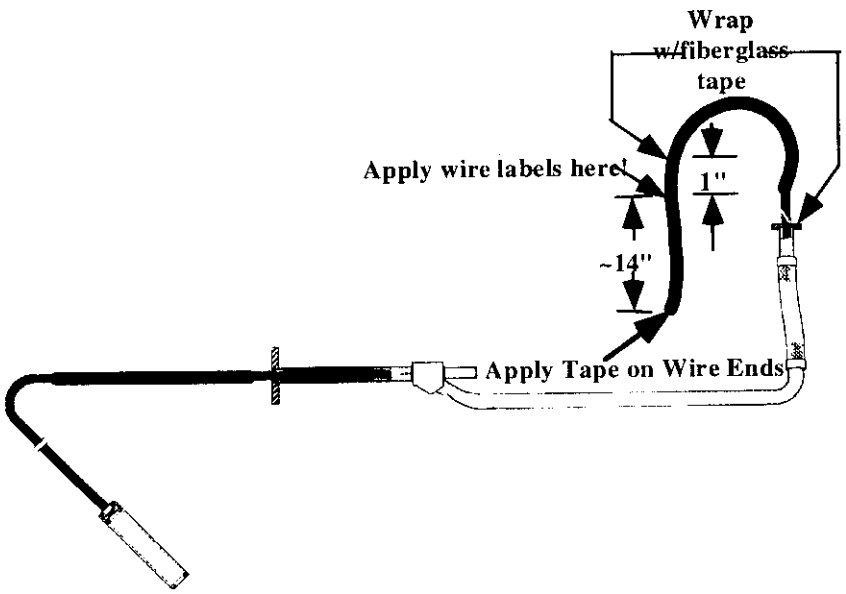

4.6.11 Put glass tape one inch from the labels on the non-connector end to keep them from sliding off. ☑

D. Eddy
Technician(s)

1/22/04
Date

4.7 Electrically check the wire bundle by performing a hipot and record results below.

Hipot	All Others Grounded	All Other Floating	Trip Voltage	5.0 Kv/Current	Comments
VTAPS	X			.02 mA	
VTAPS		X		.02 mA	
CCOIL	X			.03 mA	
CCOIL		X		.03 mA	
RTD's **(to 300V)**	X			.01mA	
RTD's **(to 300V)**		X		.01mA	
CRYO HEATERS (Warm-Up Heaters)	X			.03mA	
CRYO HEATERS (Warm-Up Heaters)		X		.02mA	
Strip Heaters (Potted In Pairs)					
Pair #1	X			.02mA	
Pair #2	X			.02mA	
Pair #3	X			.02mA	
Pair #4	X			.02mA	
Pair #5	X			.02mA	
Pair #6	X			.02mA	
Pair #7	X			.02mA	
Pair #8	X			.02mA	
Strip Heaters (Potted In Pairs)					
Pair #1		X		.01mA	
Pair #2		X		.02mA	
Pair #3		X		.02mA	
Pair #4		X		.02mA	
Pair #5		X		.01mA	
Pair #6		X		.02mA	
Pair #7		X		.02mA	
Pair #8		X		.02mA	
Spare VTAP Wire(4)	X			.01mA	
Corrector Voltage Taps		X		.02mA	
Spare Heater Wires (2 pair)	X			.03mA	
		X		.04mA	
Spare RTD Wire (1)	X			.01mA	
		X		.01mA	

D. Eddy
Technician(s)

1/22/04
Date

5.0 Material Development Lab

5.1 Prepare DFBX Instrument Duct for Pre-Cast Dam and Epoxy Plug. Process Pre-Cast Dam and Epoxy Lug in accordance with ME-418180 and other approved methods.

Note: Ensure proper Wire Bundle Length of 24" is maintained from Wire Bundle Connector and DFBX Instrument Duct Weldment Assy as per Dwg ME-418180.

Technician(s) Date

Note: Dave Burk, at the materials development and testing lab in the village, processed the pre-cast dam and epoxy plug for all the conduits. Tom Peterson
3 March 04

6.0 Final Assembly

6.1 Check each wire for continuity including spares. ☑

6.2 Check each wire for shorting to adjacent wire within each pin connector. ☑

D. Eddy
Technician(s)

1/22/04
Date

6.3 Perform an hipot check with the Capillary Tube to ground.

Hipot	All Others Grounded	All Other Floating	Trip Voltage	5.0 Kv/Current	Comments
VTAPS	X			.02 mA	
VTAPS		X		.02 mA	
CCOIL	X			.03 mA	
CCOIL		X		.02 mA	
RTD's (**to 300V**)	X			.01 mA	
RTD's (**to 300V**)		X		.01 mA	
CRYO HEATERS (Warm-Up Heaters)	X			.02 mA	
CRYO HEATERS (Warm-Up Heaters)		X		.02 mA	
Strip Heaters (Potted In Pairs)					
Pair #1	X			.01 mA	
Pair #2	X			.01 mA	
Pair #3	X			.02 mA	
Pair #4	X			.02 mA	
Pair #5	X			.02 mA	
Pair #6	X			.01 mA	
Pair #7	X			.01 mA	
Pair #8	X			.02 mA	
Strip Heaters (Potted In Pairs)				.02 mA	
Pair #1		X		.02 mA	
Pair #2		X		.02 mA	
Pair #3		X		.02 mA	
Pair #4		X		.02 mA	
Pair #5		X		.02 mA	
Pair #6		X		.02 mA	
Pair #7		X		.02 mA	
Pair #8		X		.02 mA	
Spare VTAP Wire(4)	X			.02 mA	
Corrector Voltage Taps		X		.02 mA	
Spare Heater Wires (2 pair)	X			.02 mA	
		X		.03 mA	
Spare RTD Wire (1)	X			.01 mA	
		X		.01 mA	

J. Eddy
Technician(s)

1/22/04
Date

6.4 Acquire the following components and complete the assembly by welding components together in accordance with Dwg ME-418180.

Note: All components must be thoroughly cleaned with Isopropyl Alcohol (Fermi stock 1920-0300) or approved equivalent prior to welding.

Note: Protect the Wire Bundle from touching the weld areas until welding heat has been dissipated to prevent damage to Wire Bundle.

Item #7	Blank Off	1 ea
Item #8	Tube, 3 ½" O.D. x 0.065" x 7.28" long	1 ea
MB-390073	Cold Mass Bellows Assembly	1 ea

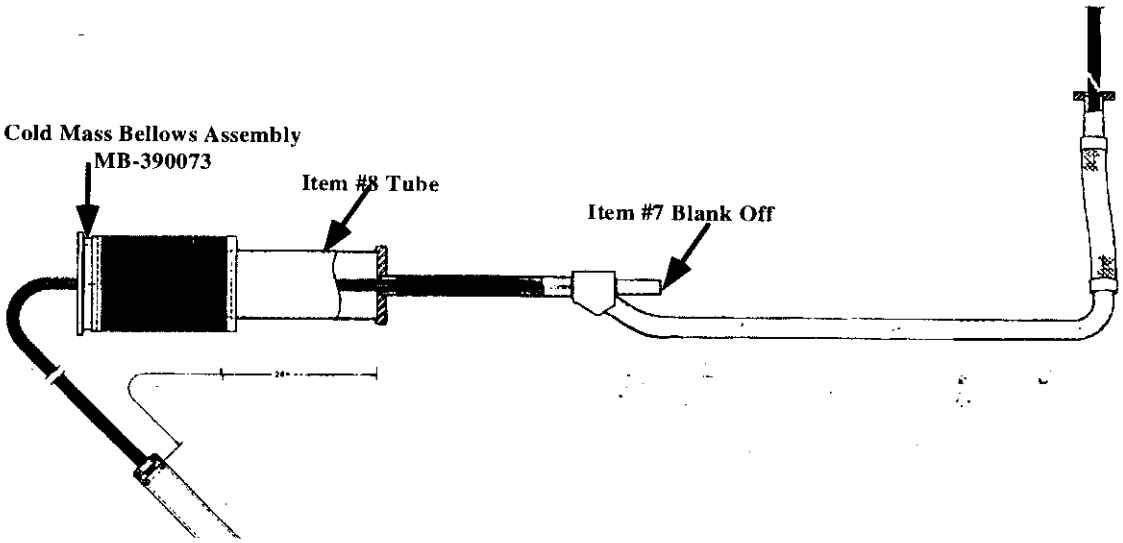

Note: Clark Reid took the conduit piping parts and drawings to the village weld shop where they were welded up as an assembly. Tom Peterson, March 19, 2004

6.5 Perform a Vacuum Leak Check of the DFBX Tube Assembly and record results below.

PART NO.		SCALE UNITS BEFORE HELIUM PROBE	SCALE UNITS WHILE ENCLOSURE FLOODING	DETERMINATION OF MINIMUM DETECTABLE LEAK				
DATE TIME	OPERATOR'S LAST NAME			MDS ÷ ((Response -Bckgnd) ÷ Leak Value) = MDL				

This unit was delivered to Meyer Tool on 9 Dec 03 before the final leak check. Tom Peterson

Inspector _____ Date _____

6.6 Electrically check the wire bundle by performing a hipot and record results below.

Note: See Step 4.4 for proper preparations for Hipot.

Hipot	All Others Grounded	All Other Floating	Trip Voltage	5.0 Kv/Current	Comments
VTAPS	X			.02 mA	
VTAPS		X		.02 mA	
CCOIL	X			.02 mA	
CCOIL		X		.02 mA	
RTD's (to 300V)	X			.01 mA	
RTD's (to 300V)		X		.01 mA	
CRYO HEATERS (Warm-Up Heaters)	X			.02 mA	
CRYO HEATERS (Warm-Up Heaters)		X		.02 mA	
Strip Heaters (Potted In Pairs)					
Pair #1	X			.02 mA	
Pair #2	X			.02 mA	
Pair #3	X			.02 mA	
Pair #4	X			.02 mA	
Pair #5	X			.02 mA	
Pair #6	X			.02 mA	
Pair #7	X			.02 mA	
Pair #8	X			.02 mA	
Strip Heaters (Potted In Pairs)				.02 mA	
Pair #1		X		.02 mA	
Pair #2		X		.02 mA	
Pair #3		X		.01 mA	
Pair #4		X		.02 mA	
Pair #5		X		.02 mA	
Pair #6		X		.02 mA	
Pair #7		X		.02 mA	
Pair #8		X			
Spare VTAP Wire(4)	X			.02 mA	
Corrector Voltage Taps		X		.02 mA	
Spare Heater Wires (2 pair)	X			.02 mA	
		X		.02 mA	
Spare RTD Wire (1)	X			.01 mA	
		X		.01 mA	
		X			

D. Eddy
Technician(s)

1/22/04
Date

6.7 Install Thermal Intercept Block (MB-418184) using Hex Head Cap Screw (1/4" -20" X 2 ¼" long) and Hex Nut (1/4" –20) in accordance with Dwg ME-418180.

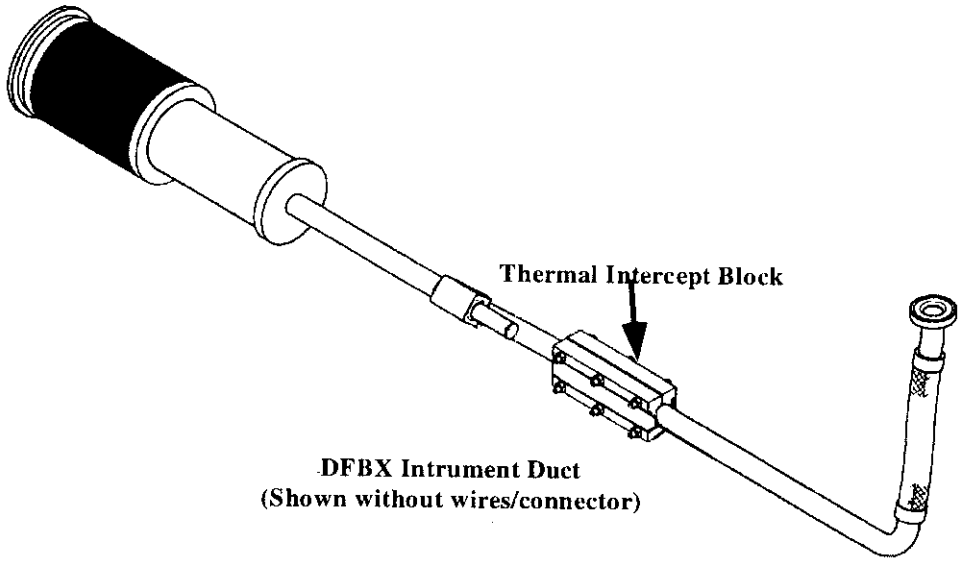

Technician(s) _____ Date ~~4/18/03~~

The thermal intercept block is not installed at Fermilab, but will be provided separately to Meyer Tool. Tom Peterson 4 Mar 04

6.8 Prepare the DFBX Instrument Duct/Wiring Assembly for shipment by performing the below:

6.8.1 On the connector end, fold over the spare wires and tape to the wire bundle with white fiberglass tape. See Figure #1 below. ☑

6.8.2 Coil the connector end wire bundle and insert into the bellows assembly. Ensure the Connector is pointing outward after insertion into bellows assy. ☑

6.8.3 Wrap the bellows assembly with cardboard and secure with tape. ☑

6.8.4 Insert Plastic Cover, Red, into cardboard protector and secure with tape. ☑

6.8.5 Fold over spare wires and tape to the non-connector end wire bundle. Only ½" up to the labels. See Figure #1 & Figure #2 below. ☑

6.86 Tape the non-connector end wire bundle to the Instrument Duct Tube. ☑

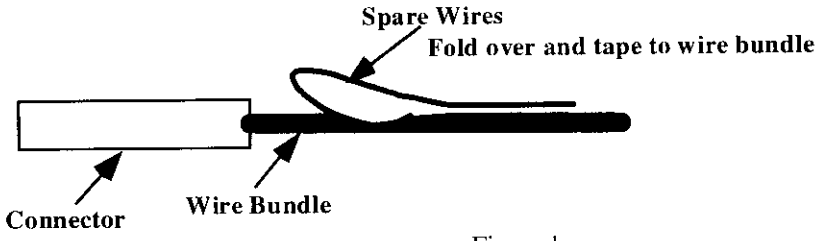

Figure 1

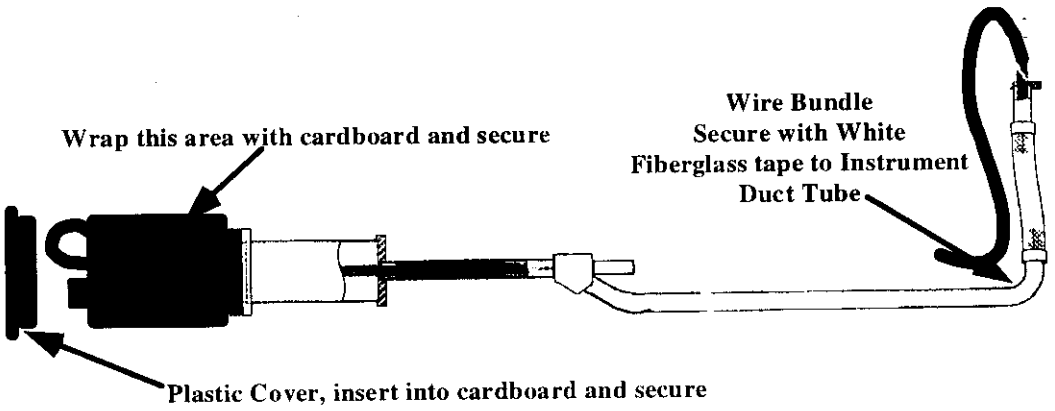

Figure 2

D. Eddy
Technician(s)

1/22/09
Date

7.0 Production Complete

7.1 Process Engineering verify that the LHC DFBX Instrument Duct Assembly Traveler is accurate and complete. This shall include a review of all steps to ensure that all operations have been completed and signed off. Ensure that all Discrepancy Reports, Nonconformance Reports, Repair/Rework Forms, Deviation Index and dispositions have been reviewed by the Responsible Authority for conformance before being approved.

Comments:

Bob Dlugo
Process Engineering/Designee

4/15/04
Date

Note: As of March 22, Meyer Tool has plenty of MQX2 assemblies, so we may bring this one back for its final leak checking and labeling. Tom P.