VCL Leads Data Reports From AMI

Current Lead Test Data Sheet

Current Lead Serial Number 3W0909A

Dwg and Rev Number 03-9537-3006-K1

Test #	Test Title		Date	Technician

1 Dimensional Check

Dimension A

9-25-03 JACK

Lead #1	5 45/64
Lead #2	5 23/32
Lead #3	5 47/64
Lead #4	5 23/32
Lead #5	5 23/32
Lead #6	5 47/64
Lead #7	5 47/64
Lead #8	5 23/32
Lead #9	5 23/32
Lead #10	5 23/32

Dimension B

9-25-03 JACK

Lead #1	9 39/64
Lead #2	9 5/8
Lead #3	9 5/8
Lead #4	9 5/8
Lead #5	9 5/8
Lead #6	9 5/8
Lead #7	9 41/64
Lead #8	9 5/8
Lead #9	9 39/64
Lead #10	9 5/8

Dimension C

9-25-03 JACK

Lead #1	39 13/64
Lead #2	39 13/64
Lead #3	39 13/64
Lead #4	39 13/64
Lead #5	39 13/64
Lead #6	39 13/64
Lead #7	39 3/16
Lead #8	39 13/64
Lead #9	39 13/64
Lead #10	39 13/64

Test #	Test Title		Date	Technician

Dimension D

Lead #1	31 17/64	9-25-03	JACK
Lead #2	31 17/64		
Lead #3	31 17/64		
Lead #4	31 17/64		
Lead #5	31 1/4		
Lead #6	31 17/64		
Lead #7	31 9/32		
Lead #8	31 9/32		
Lead #9	31 1/4		
Lead #10	31 17/64		

Dimension E

Lead #1	6	9-25-03	JACK
Lead #2	6		
Lead #3	6		
Lead #4	6		
Lead #5	6		
Lead #6	6		
Lead #7	6		
Lead #8	6		
Lead #9	6		
Lead #10	6		

Dimension F	5 9/64	9-25-03	JACK

Dimension G

Lead #1	0	9-25-03	JACK
Lead #2	0		
Lead #3	0		
Lead #4	1/64		
Lead #5	1/64		
Lead #6	1/64		
Lead #7	0		
Lead #8	1/64		
Lead #9	0		
Lead #10	0		

Dimension H	.002	9-25-03	JACK

Test #	Test Title		Date	Technician
2	**Pressure Test**			
	Result (circle one)	Pass/Fail	9-12-03	RF
	Degradation of pressure?	NONE		
3	**Leak Test**			
	Result (circle one)	Pass/Fail	9-15-03	RF
	Leak rate achieved?	1.1×10^{-9}		
4	**Voltage Isolation Test In Air**			
	Result (circle one)	Pass/Fail	9-15-03	BM
	Isolation voltage achieved	2KV/4KV		
5	**Voltage Isolation Test In Dewar**			
	Result (circle one)	Pass/Fail	10-15-03	GB
	Isolation voltage achieved	600V		
6	**Full Current Test**			
	Result (circle one)	Pass/Fail	10-15-03	GB
	Max voltage across lead			
	Lead			
	Lead			
	Lead			
	Lead			
	Lead			
	Lead			
	Lead			
	Lead			
	Lead			
	Lead			

Project Engineer

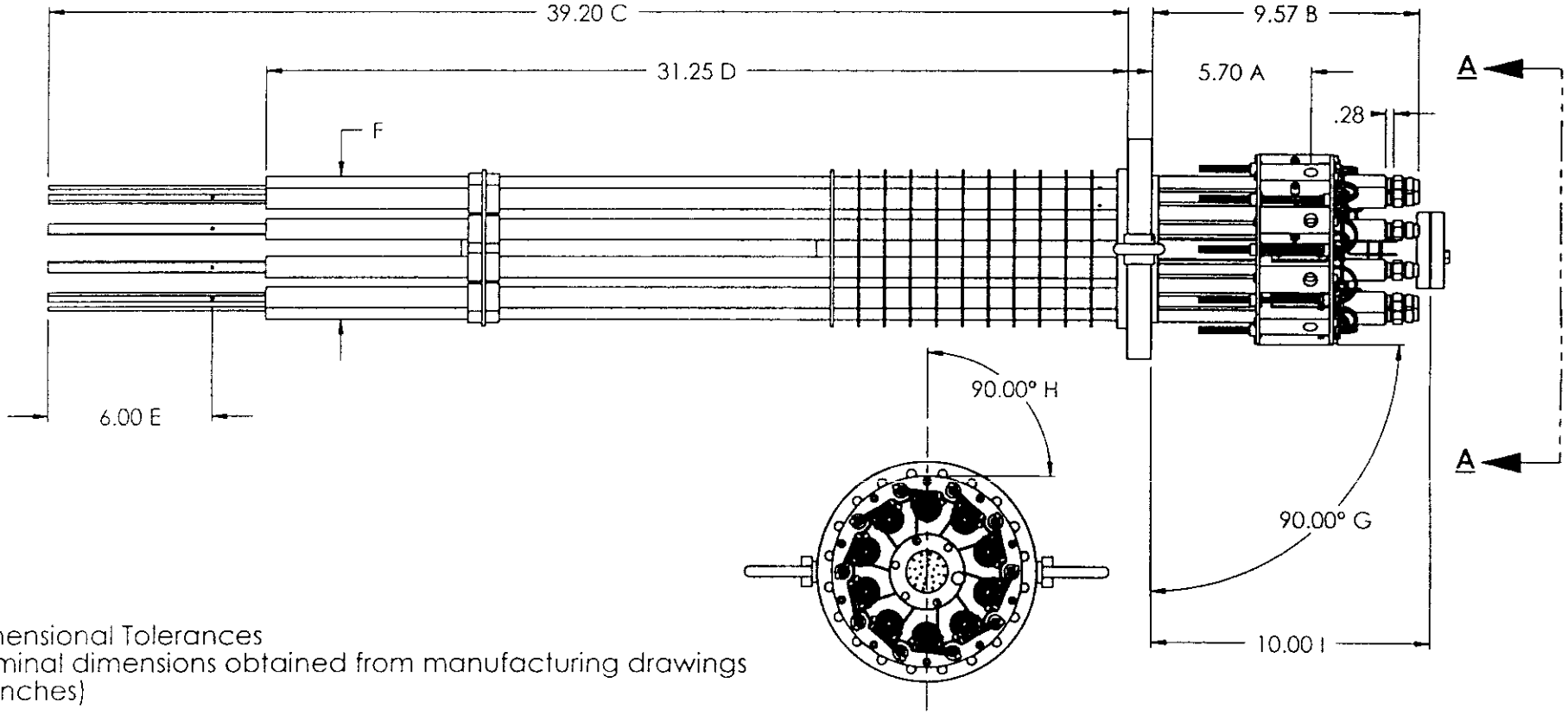

Dimensional Tolerances
Nominal dimensions obtained from manufacturing drawings
(in inches)

A (Top of flange to power cable connection) - Nominal +/- .10"
B (Top of flange to cooling gas outlets) - Nominal +/- .10"
C (Bottom of flange to end of busbar) - Nominal +/- .10"
D (Bottom of flange to end of G-10 insulating tube - Nominal +/- .10"
E (Bottom of busbar to voltage tap hole) - Nominal +/- .10"
F (Lead envelope outer diameter) - < 5.15 for 120 Amp lead < 5.10 for 600 Amp lead
G (Datum to conductor face orientation) - Perpendicular +/- .03"
H (Datum to conductor face orientation) - Perpendicular +/- .03"
I (Top of flange to split line of feedthrough (not required by LBNL) - +.10"/- .20"

PROPRIETARY INFORMATION

THE INFORMATION CONTAINED IN THIS DRAWING IS THE SOLE PROPERTY OF AMERICAN MAGNETICS, INC., OAK RIDGE, TN., 37830. ANY REPRODUCTION IN PART OR WHOLE WITHOUT THE WRITTEN PERMISSION OF AMERICAN MAGNETICS, INC. IS STRICTLY PROHIBITED.

TOLERANCES UNLESS OTHERWISE SPECIFIED	**AMERICAN MAGNETICS INC.**			
FRACTIONS ± 1/64 XX DECIMALS ± 0.01 XXX DECIMALS ± 0.005 ANGLES ± 0°-30' BREAK SHARP EDGES 1/64 MAX SURFACE FINISH = 63 RMS	AMI	DESCRIPTION LBNL 120 AMP VCCL DIMENSIONAL REQ'S		
UNLESS OTHERWISE SPECIFIED ALL DIMENSIONS ARE IN INCHES	DATE: 6/18/03	DRAWN BY: GJL	REVIEWED BY:	APPROVED BY:
	SCALE 1:6	SIZE A	DRAWING NO. 03-9551-3006	SHEET 1 OF 1 REV 1

Current Lead Test Data Sheet

Current Lead Serial Number 3W0909 B Dwg and Rev Number 03-9551-3005-R0

Test #	Test Title		Date	Technician

1 Dimensional Check

Dimension A

9-25-03 JACK

Lead #1	4 29/32
Lead #2	4 57/64
Lead #3	4 57/64
Lead #4	4 29/32
Lead #5	4 7/8
Lead #6	4 29/32
Lead	
Lead	
Lead	
Lead	

Dimension B

9-25-03 JACK

Lead #1	9 21/32
Lead #2	9 21/32
Lead #3	9 21/32
Lead #4	9 21/32
Lead #5	9 41/64
Lead #6	9 21/32
Lead	
Lead	
Lead	
Lead	

Dimension C

9-25-03 JACK

Lead #1	39 3/32
Lead #2	39 1/8
Lead #3	39 1/8
Lead #4	39 7/64
Lead #5	39 9/64
Lead #6	39 1/8
Lead	
Lead	
Lead	
Lead	

Test #	Test Title		Date	Technician

Dimension D

Lead #1 30 9/32 — 9-25-03 — JACK
Lead #2 30 9/32
Lead #3 30 19/64
Lead #4 30 19/64
Lead #5 30 9/32
Lead #6 30 9/32
Lead
Lead
Lead
Lead

Dimension E

Lead #1 6 — 9-25-03 — JACK
Lead #2 6
Lead #3 6
Lead #4 6
Lead #5 6
Lead #6 6
Lead
Lead
Lead
Lead

Dimension F 5 5/64 — 9-25-03 — JACK

Dimension G

Lead #1 1/64 — 9-25-03 — JACK
Lead #2 0
Lead #3 1/64
Lead #4 0
Lead #5 0
Lead #6 0
Lead
Lead
Lead
Lead

Dimension H .003 — 9-25-03 — JACK

Test #	Test Title		Date	Technician
2	**Pressure Test**			
	Result (circle one)	Pass/Fail	9-10-03	RF
	Degradation of pressure?	NONE		
3	**Leak Test**			
	Result (circle one)	Pass/Fail	9-11-03	RF
	Leak rate achieved?	1×10^{-9}		
4	**Voltage Isolation Test in Air**			
	Result (circle one)	Pass/Fail	9-11-03	BM
	Isolation voltage achieved	2KV/4KV		
5	**Voltage Isolation Test in Dewar**			
	Result (circle one)	Pass/Fail	10-17-03	GB
	Isolation voltage achieved	600V		
6	**Full Current Test**			
	Result (circle one)	Pass/Fail	10/17/03	GB
	Max voltage across lead			
	Lead			
	Lead			
	Lead			
	Lead			
	Lead			
	Lead			
	Lead			
	Lead			
	Lead			
	Lead			

Project Engineer

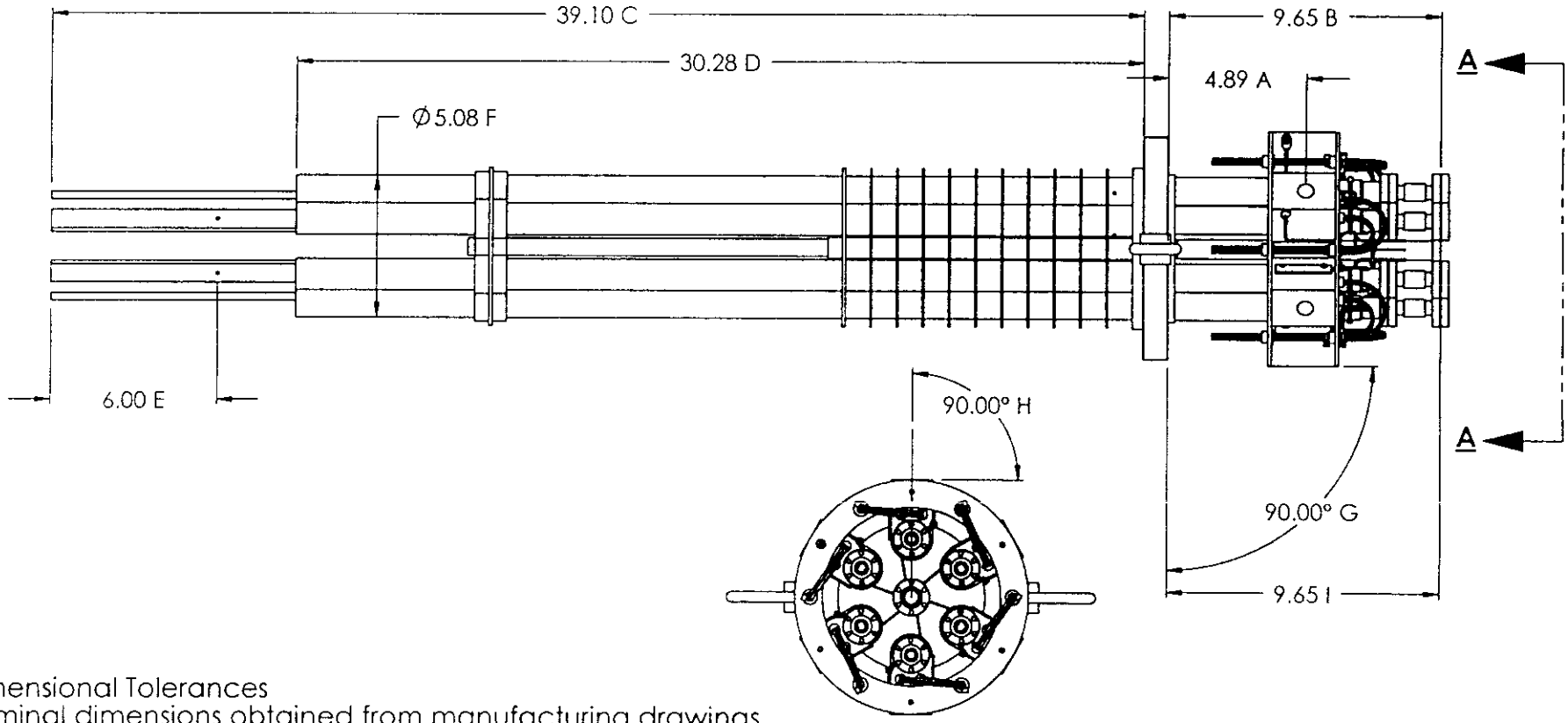

VIEW A-A

Dimensional Tolerances
Nominal dimensions obtained from manufacturing drawings
(in inches)

A (Top of flange to power cable connection) - Nominal +/- .10"
B (Top of flange to cooling gas outlets) - Nominal +/- .10"
C (Bottom of flange to end of busbar) - Nominal +/- .10"
D (Bottom of flange to end of G-10 insulating tube - Nominal +/- .10"
E (Bottom of busbar to voltage tap hole) - Nominal +/- .10"
F (Lead envelope outer diameter) - < 5.15 for 120 Amp lead < 5.10 for 600 Amp lead
G (Datum to conductor face orientation) - Perpendicular +/- .03"
H (Datum to conductor face orientation) - Perpendicular +/- .03"
I (Top of flange to split line of feedthrough (not required by LBNL) - +.10"/- .20"

PROPRIETARY INFORMATION

THE INFORMATION CONTAINED IN THIS DRAWING IS THE SOLE PROPERTY OF AMERICAN MAGNETICS, INC., OAK RIDGE, TN., 37830. ANY REPRODUCTION IN PART OR WHOLE WITHOUT THE WRITTEN PERMISSION OF AMERICAN MAGNETICS, INC. IS STRICTLY PROHIBITED.

TOLERANCES UNLESS OTHERWISE SPECIFIED	**AMERICAN MAGNETICS INC.**			
FRACTIONS ± 1/64 XX DECIMALS ± 0.01 XXX DECIMALS ± 0.005 ANGLES ± 0°-30' BREAK SHARP EDGES 1/64 MAX SURFACE FINISH = 63 RMS	AMI	DESCRIPTION **LBNL** 600 AMP VCCL DIMENSIONAL REQ'S		
UNLESS OTHERWISE SPECIFIED ALL DIMENSIONS ARE IN INCHES	DATE: 6/18/03	DRAWN BY: GJL	REVIEWED BY:	APPROVED BY:
	SCALE 1:6	SIZE A	DRAWING NO. 03-9551-3005	SHEET 1 OF 1	REV 0

Current Lead Test Data Sheet

Current Lead Serial Number 3W0909C

Dwg and Rev Number 03-9551-3005-R0

Test #	Test Title		Date	Technician

1 Dimensional Check

Dimension A

9-25-03 JACK

Lead #7 4 57/64
Lead #8 4 57/64
Lead #9 4 57/64
Lead #10 4 57/64
Lead #11 4 29/32
Lead #12 4 57/64
Lead
Lead
Lead
Lead

Dimension B

9-25-03 JACK

Lead #7 9 21/32
Lead #8 9 21/32
Lead #9 9 21/32
Lead #10 9 21/32
Lead #11 9 21/32
Lead #12 9 21/32
Lead
Lead
Lead
Lead

Dimension C

9-25-03 JACK

Lead #7 39 9/64
Lead #8 39 9/64
Lead #9 39 1/8
Lead #10 39 1/8
Lead #11 39 5/32
Lead #12 39 1/8
Lead
Lead
Lead
Lead

Test #	Test Title		Date	Technician

Dimension D

Lead #7	30 9/32	9-25-03	JACK
Lead #8	30 19/64		
Lead #9	30 19/64		
Lead #10	30 19/64		
Lead #11	30 19/64		
Lead #12	30 19/64		
Lead			
Lead			
Lead			
Lead			

Dimension E

Lead #7	6	9-25-03	JACK
Lead #8	6		
Lead #9	5 63/64		
Lead #10	5 63/64		
Lead #11	6		
Lead #12	6		
Lead			
Lead			
Lead			
Lead			

Dimension F	5 1/16	9-25-03	JACK

Dimension G

Lead #7	0	9-25-03	JACK
Lead #8	0		
Lead #9	0		
Lead #10	0		
Lead #11	0		
Lead #12	1/64		
Lead			
Lead			
Lead			
Lead			

Dimension H	.006	9-25-03	JACK

Test #	Test Title		Date	Technician

2 Pressure Test

Result (circle one) Pass/Fail 9-11-03 RF

Degradation of pressure? NONE

3 Leak Test

Result (circle one) Pass/Fail 9-12-03 RF

Leak rate achieved? 6.4×10^{-10}

4 Voltage Isolation Test In Air

Result (circle one) Pass/Fail 9-12-03 BM

Isolation voltage achieved 2KV/4KV

5 Voltage Isolation Test In Dewar

Result (circle one) Pass/Fail 10-16-03 GB

Isolation voltage achieved 600 V

6 Full Current Test

Result (circle one) Pass/Fail 10-16-03 GB

Max voltage across lead

Lead _____

Lead _____

Lead _____

Lead _____

Lead _____

Lead _____

Lead _____

Lead _____

Lead _____

Lead _____

Project Engineer _____

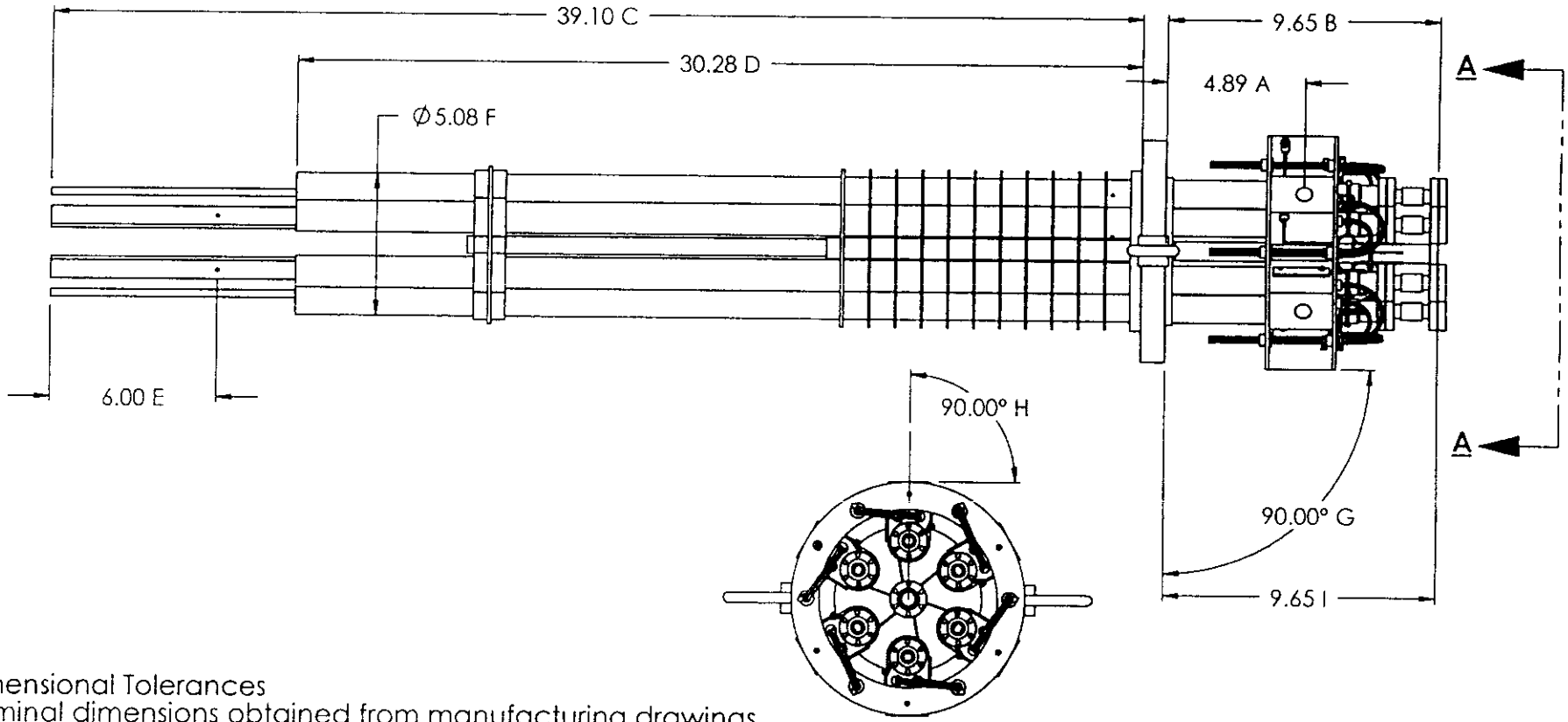

VIEW A-A

Dimensional Tolerances
Nominal dimensions obtained from manufacturing drawings
(in inches)

A (Top of flange to power cable connection) - Nominal +/- .10"
B (Top of flange to cooling gas outlets) - Nominal +/- .10"
C (Bottom of flange to end of busbar) - Nominal +/- .10"
D (Bottom of flange to end of G-10 insulating tube - Nominal +/- .10"
E (Bottom of busbar to voltage tap hole) - Nominal +/- .10"
F (Lead envelope outer diameter) - < 5.15 for 120 Amp lead < 5.10 for 600 Amp lead
G (Datum to conductor face orientation) - Perpendicular +/- .03"
H (Datum to conductor face orientation) - Perpendicular +/- .03"
I (Top of flange to split line of feedthrough (not required by LBNL) - +.10"/- .20"

PROPRIETARY INFORMATION

THE INFORMATION CONTAINED IN THIS DRAWING IS THE SOLE PROPERTY OF AMERICAN MAGNETICS, INC., OAK RIDGE, TN., 37830. ANY REPRODUCTION IN PART OR WHOLE WITHOUT THE WRITTEN PERMISSION OF AMERICAN MAGNETICS, INC. IS STRICTLY PROHIBITED.

TOLERANCES UNLESS OTHERWISE SPECIFIED	**AMERICAN MAGNETICS INC.**			
FRACTIONS ± 1/64 XX DECIMALS ± 0.01 XXX DECIMALS ± 0.005 ANGLES ± 0°-30' BREAK SHARP EDGES 1/64 MAX SURFACE FINISH = 63 RMS	AMI	DESCRIPTION LBNL 600 AMP VCCL DIMENSIONAL REQ'S		
UNLESS OTHERWISE SPECIFIED ALL DIMENSIONS ARE IN INCHES	DATE: 6/18/03	DRAWN BY: GJL	REVIEWED BY:	APPROVED BY:
	SCALE 1:6	SIZE A	DRAWING NO. 03-9551-3005	SHEET 1 OF 1 REV 0

Current Lead Test Data Sheet

Current Lead Serial Number 3W0909D

Dwg and Rev Number 03-9551-3005-R0

Test #	Test Title		Date	Technician

1 Dimensional Check

Dimension A

Lead #13 4 57/64 — 9-25-03 — JACK

Lead #14 4 57/64

Lead

Lead

Lead

Lead

Lead

Lead

Lead

Lead

Dimension B

Lead #13 9 41/64 — 9-25-03 — JACK

Lead #14 9 21/32

Lead

Lead

Lead

Lead

Lead

Lead

Lead

Lead

Dimension C

Lead #13 39 9/64 — 9-25-03 — JACK

Lead #14 39 1/8

Lead

Lead

Lead

Lead

Lead

Lead

Lead

Lead

Test #	Test Title		Date	Technician

Dimension D

Lead #13 30 5/16 — 9-25-03 — JACK
Lead #14 30 19/64
Lead
Lead
Lead
Lead
Lead
Lead
Lead
Lead

Dimension E

Lead #13 6 — 9-25-03 — JACK
Lead #14 6
Lead
Lead
Lead
Lead
Lead
Lead
Lead
Lead

Dimension F — 9-25-03 — JACK

Dimension G

Lead #13 1/64 — 9-25-03 — JACK
Lead #14 1/64
Lead
Lead
Lead
Lead
Lead
Lead
Lead
Lead

Dimension H .003 — 9-25-03 — JACK

Test #	Test Title		Date	Technician
2	**Pressure Test**			
	Result (circle one)	Pass/Fail	9-9-03	RF
	Degradation of pressure?	NONE		
3	**Leak Test**			
	Result (circle one)	Pass/Fail	9-10-03	RF
	Leak rate achieved?	1.2×10^{-9}		
4	**Voltage Isolation Test In Air**			
	Result (circle one)	Pass/Fail	9-10-03	SB
	Isolation voltage achieved	2000/4000		
5	**Voltage Isolation Test In Dewar**			
	Result (circle one)	Pass/Fail	11-12-03	GB
	Isolation voltage achieved	600		
6	**Full Current Test**			
	Result (circle one)	Pass/Fail	11/12/03	GOL
	Max voltage across lead			
	Lead			
	Lead			
	Lead			
	Lead			
	Lead			
	Lead			
	Lead			
	Lead			
	Lead			
	Lead			

Project Engineer

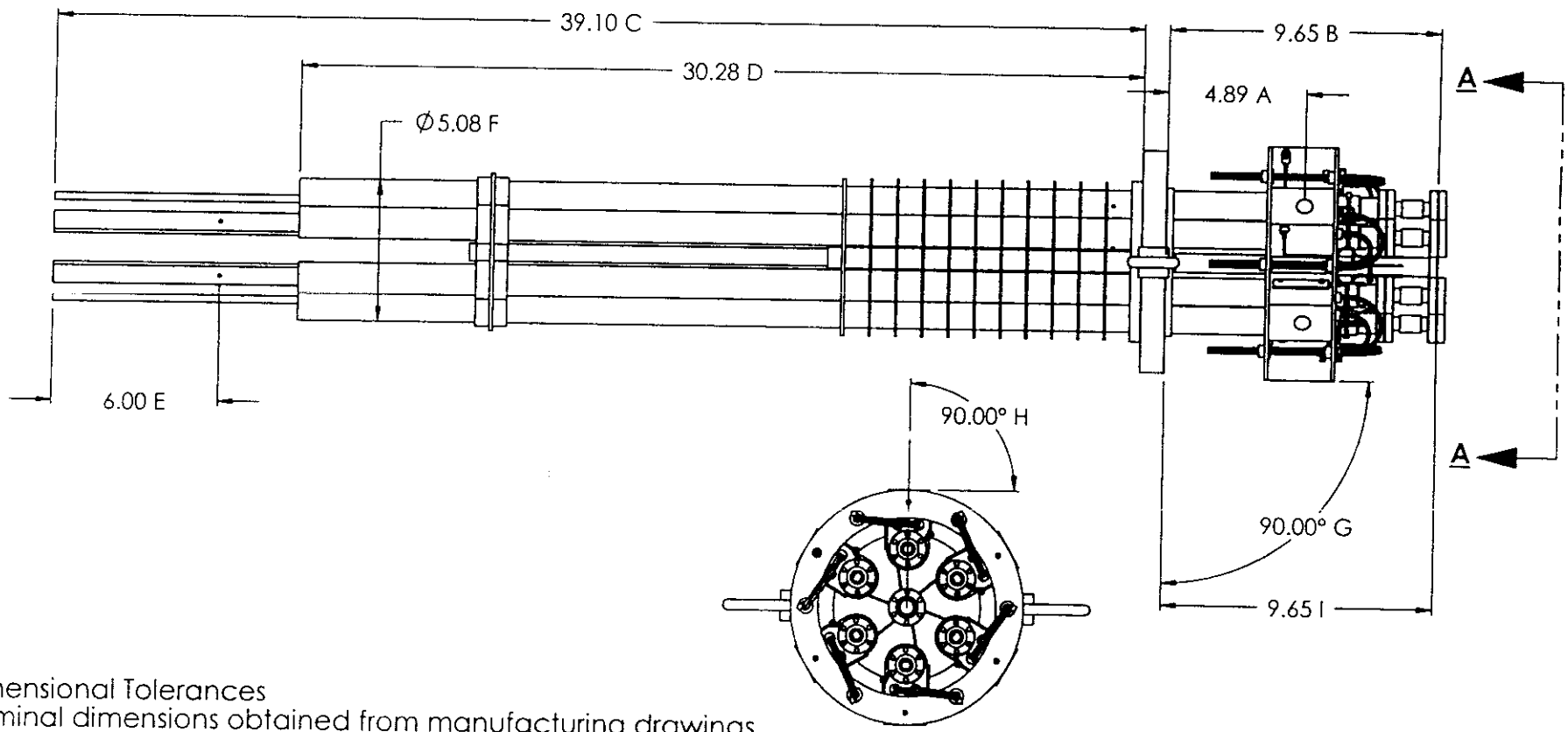

VIEW A-A

Dimensional Tolerances
Nominal dimensions obtained from manufacturing drawings
(in inches)

A (Top of flange to power cable connection) - Nominal +/- .10"
B (Top of flange to cooling gas outlets) - Nominal +/- .10"
C (Bottom of flange to end of busbar) - Nominal +/- .10"
D (Bottom of flange to end of G-10 insulating tube - Nominal +/- .10"
E (Bottom of busbar to voltage tap hole) - Nominal +/- .10"
F (Lead envelope outer diameter) - < 5.15 for 120 Amp lead < 5.10 for 600 Amp lead
G (Datum to conductor face orientation) - Perpendicular +/- .03"
H (Datum to conductor face orientation) - Perpendicular +/- .03"
I (Top of flange to split line of feedthrough (not required by LBNL) - +.10"/- .20"

PROPRIETARY INFORMATION

THE INFORMATION CONTAINED IN THIS DRAWING IS THE SOLE PROPERTY OF AMERICAN MAGNETICS, INC., OAK RIDGE, TN., 37830. ANY REPRODUCTION IN PART OR WHOLE WITHOUT THE WRITTEN PERMISSION OF AMERICAN MAGNETICS, INC. IS STRICTLY PROHIBITED.

TOLERANCES UNLESS OTHERWISE SPECIFIED	**AMERICAN MAGNETICS INC.**			
FRACTIONS ± 1/64 XX DECIMALS ± 0.01 XXX DECIMALS ± 0.005 ANGLES ± 0°-30' BREAK SHARP EDGES 1/64 MAX SURFACE FINISH = 63 RMS	AMI	DESCRIPTION LBNL 600 AMP VCCL DIMENSIONAL REQ'S		
UNLESS OTHERWISE SPECIFIED ALL DIMENSIONS ARE IN INCHES	DATE: 6/18/03	DRAWN BY: GJL	REVIEWED BY:	APPROVED BY:
	SCALE 1:6	SIZE A	DRAWING NO. 03-9551-3005	SHEET 1 OF 1	REV 0