Final Dimensional Inspection

Meyer Tool & Mfg., Inc.

4601 W. Southwest Hwy., Oak Lawn, Illinois 60453
708/425-9080 Fax 708/425-2612

Inspection Report

Job No.: 00918-0005 OP10
Customer: LBNL
Description: Distribution Box H
MTM Dwg/Item No.: 24C362

Inspected By: DJC / WJ
Date: 10/21/05
MTE and Set up: Romer Arm, Calipers, Scale

Dimension	Results			(3)
Dwg 24C362 Sheet 4				
Zone B8: 35.63" +/-.08"	OK 35.562"			
Zone B8: 2.95" +/-.08"	OK 3.019"			
Zone C6: 95.40" +/-.08"	OK 95.454"			
Zone C6: 66.929" +/-.08"	* 61.025" * (out-of-tol. by -.016")			1
Zone C4: 13.134" +/-.08"	OK 13.097"			
Zone B3: 42.11" +/-.08"	OK 42.188"			
Zone B3: 3.53" +/-.08"	OK 3.577"			
Dwg 24C362 Sheet 7				
8.78"+/-.08" (JC1)	* 8.677" *			2
8.78"+/-.08" (JC2)	* 8.607" *			3
Zone A8: 26.9" REF	OK 26.823" (REF DIM)			
Zone A3: 33.2" REF	OK 33.262" (REF. DIM)			
JC1 Pipe Locations X+/-.08", Y+/-.08", Z+/-.08"	X	Y	Z	
XB: -14.45", 0.00", 3.07"	-14.5"	0	3.07"	
LD2: -14.45", 3.66", 0.00"	-14.437"	3.66"	0	
LD1: -14.45", -3.66", 0.00"	-14.5"	-3.650"	0	
E1: -14.45", 0.00", -1.26"	-14.5"	0	-1.26"	
CY1: -14.45", 0.00", -4.33"	-14.450"	0	-4.370"	
JC2 Pipe Locations X+/-.08", Y+/-.08", Z+/-.08"	X	Y	Z	
E2: -14.45", 0.00", 3.07"	-14.5	0	3.062"	
DH: -14.45", -3.66", 0.00"	-14.5	-3.66"	0	
LD3: -14.45", 3.66", 0.00"	-14.5	3.650"	0	
CC2: -14.45", 0.00", -1.26"	-14.5	0	-1.250"	
CC1: -14.45", -2.64", -3.46"	-14.5	-2.625"	-3.437"	
CC3: -14.45", 2.64", -3.46"	-14.437	2.625"	-3.460"	
CY2: -14.45", 0.00", -4.33"	-14.5	0	-4.375"	
Dwg 24C362 Sheet 8 (supplemental sheet)				
Q3 Pipe Locations X+/-.08", Z+/-.08", Y+/-.08"	X	Z	Y	
V: 0.00", -2.95", 2.03"	within .080"	3.019"	2.0"	
LD1: -9.44", 7.90", 6.30"	-9.437"	7.907"	6.309"	
CC2: 1.74", -14.77", 6.3"	1.750"	-14.780"	6.298"	
ZONE B8 - 38.58" ±.08" JC1	OK 38.581"			
ZONE B3 - 38.58" ±.08" JC2	OK 38.599"			

Meyer Tool & Mfg., Inc.

4601 W. Southwest Hwy., Oak Lawn, Illinois 60453
708/425-9080 Fax 708/425-2612

Inspection Report

Job No.: 00918-0005 OP10
Customer: LBNL
Description: Distribution Box H
MTM Dwg/Item No.: 24C362

Inspected By:
Date:
MTE and Set up: Romer Arm, Calipers, Scale

Dimension	**Results** X	Z	Y	**(3)**
CY1: 0.00", 11.79", -3.62"	0	11.800"	-3.625"	
E1: 15.34", -0.07", -6.30"	15.370"	-.062"	-6.300"	
EX: -15.36", -0.20", -6.30"	-15.360"	-0.180"	-6.309"	
MQX1: 0.00", -8.82", -6.30" Without Restraints	000"	-8.900"	-6.250"	
MQX2: 5.90", -2.98", -6.30"	5.950"	-3.00"	-6.308"	
WQX (flange): 0.00", 0.00", 0.00"	0	0	0	
XB: -9.42", 7.92", -5.12"	-9.485"	7.940"	-5.125"	
D1 Pipe Locations X+/-.08", Z+/-.08", Y+/-.08"	X	Z	Y	
V: 0.00", 3.53", 13.50" within	.080"	3.577"	13.500"	
LD2: -8.36", -0.12", 13.46"	-8.350"	-.137"	13.460"	
CC3: -6.60", -4.35", 14.84"	-6.610"	-4.363"	14.842"	
CY2: 5.90", 7.62", 14.84"	-5.908"	7.637"	14.840"	
EX: -6.44", -6.44", 11.69"	-6.460"	-6.430"	11.700"	
E2: 6.55", -5.51", 11.69"	6.553"	-5.585"	11.694"	
MBX1: 0.00, -1.72", 3.78" within	.080"	-1.653"	3.750"	
MBX2: -3.86", 0.25", 5.46"	-3.871	.248"	5.471"	
WBX (flange): 0.00", 0.00", 0.00"	0	0	0	
XB:-4.90", -3.29", 13.46"	-4.910"	-3.291"	13.460"	
Dwg 24C362 Sheet 11				
Zone D8; 16.95" +/-.03" TB-2	* 16.894" *			4
Zone D8; 30.71" +/-.02"	* 30.763" *			5
Zone D6; 84.715" +/-.02"	ok 84.729"			
Zone D3; 16.95" +/-.03" TB-1	ok 16.925"			
Zone D4: Reference surface L =/-.6 milliradians angular variation with respect to C (.005" over 8")	within .005"			
Zone B8: 9.50" Ref.	* 9.372" (Ref.?)			6
Zone B2: 16.00" Ref.	* 15.805" (Ref.?)			7
Supplemental Dimensions.				
2.81" Ref.	2.858"			
2.81"	2.718"			
7.15"	6.978"			
1.52"	1.308"			
100.35"	100.414"			
94.73"	94.762"			

Meyer Tool & Mfg., Inc.

4601 W. Southwest Hwy., Oak Lawn, Illinois 60453
708/425-9080 Fax 708/425-2612

Inspection Report

Job No.: 00918-0005 OP10
Customer: LBNL
Description: Distribution Box H
MTM Dwg/Item No.: 24C362

Inspected By:
Date:
MTE and Set up: Romer Arm, Calipers, Scale

Dimension	Results	(3)
16.20" Ref.	16.043"	
10.57"	10.563"	
10.57"	10.497"	
16.20"	16.133"	
100.35"	100.344"	
94.73"	94.776"	

Noconformance Disposition: _____

_____

Dispositioned By: _____ Date: _____

Notes: 1. Record value of all out of tolerance/specification dimension/characteristics. Unless required to record actual values, it is sufficient to report dimensions or characteristics within tolerance or specification as OK.
2. Asterisk (*) all nonconformances. 3. Consecutively number all nonconformances.

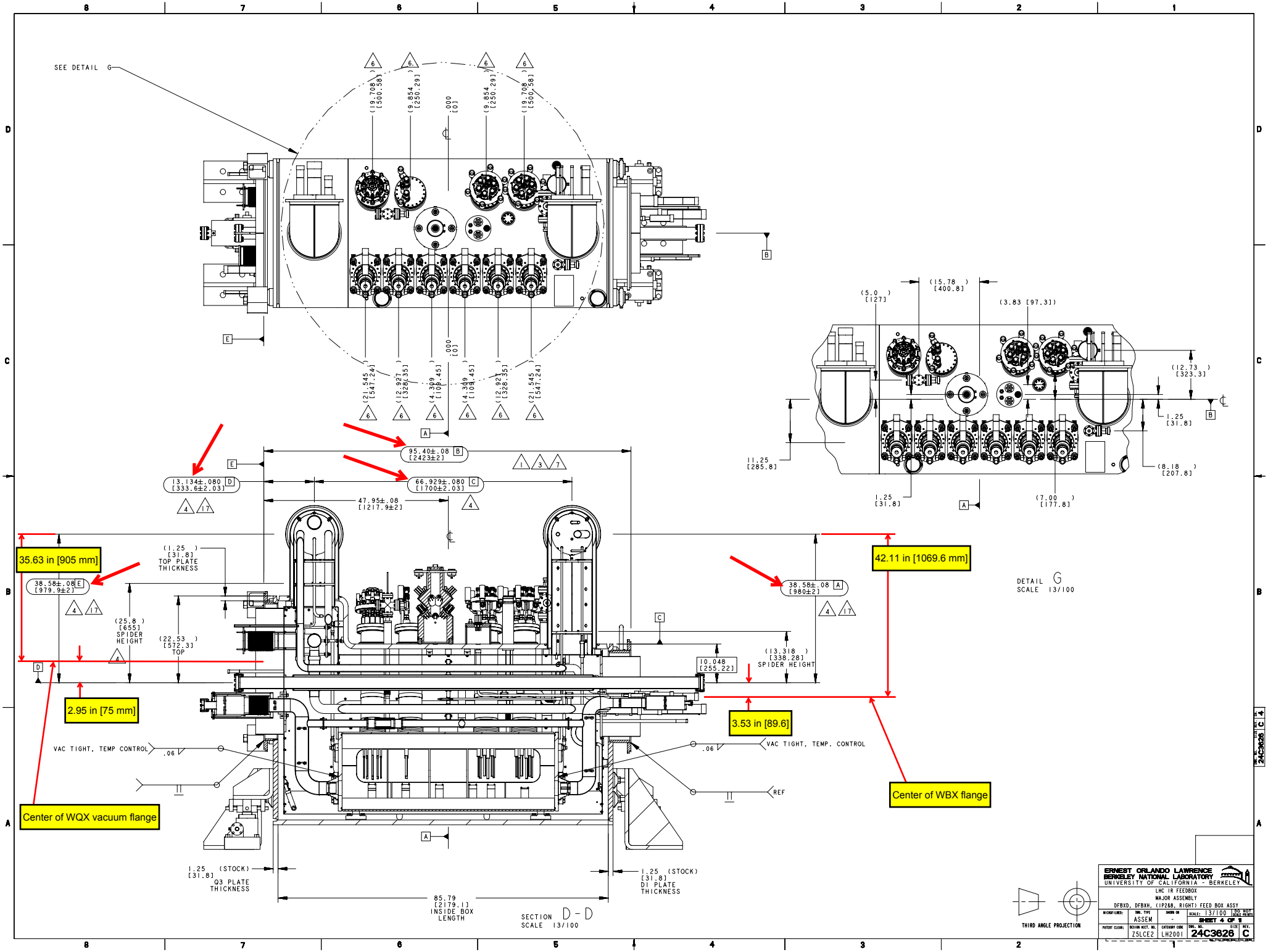
SEE DETAIL G
(19.708) [500.58]
(9.854) [250.29]
.000 [0]
(21.545) [547.24]
(12.927) [328.35]
(4.309) [109.45]
95.40±.08 [2423±2]
13.134±.080 [333.6±2.03]
66.929±.080 [1700±2.03]
47.95±.08 [1217.9±2]
35.63 in [905 mm]
38.58±.08 [979.9±2]
(1.25) [31.8] TOP PLATE THICKNESS
(25.8) [655] SPIDER HEIGHT
(22.53) [572.3] TOP
2.95 in [75 mm]
Center of WQX vacuum flange
VAC TIGHT, TEMP CONTROL
.06
1.25 [31.8] (STOCK) Q3 PLATE THICKNESS
85.79 [2179.1] INSIDE BOX LENGTH
SECTION D-D
SCALE 13/100
38.58±.08 [980±2]
42.11 in [1069.6 mm]
10.048 [255.22]
(13.318) [338.28] SPIDER HEIGHT
3.53 in [89.6]
VAC TIGHT, TEMP. CONTROL
REF
1.25 [31.8] (STOCK) DI PLATE THICKNESS
Center of WBX flange
(15.78) [400.8]
(5.0) [127]
(3.83 [97.3])
(12.73) [323.3]
1.25 [31.8]
11.25 [285.8]
(8.18) [207.8]
(7.00) [177.8]
DETAIL G
SCALE 13/100
THIRD ANGLE PROJECTION
ERNEST ORLANDO LAWRENCE BERKELEY NATIONAL LABORATORY
UNIVERSITY OF CALIFORNIA - BERKELEY
LHC IR FEEDBOX
MAJOR ASSEMBLY
DFBXD, DFBXH, (IP2&8, RIGHT) FEED BOX ASSY
DWG. TYPE ASSEM
SCALE: 13/100
SHEET 4 OF 11
DESIGN ACCT. NO. Z5LCE2
CATEGORY CODE LH2001
DWG. NO. 24C3626
SIZE C
REV. C

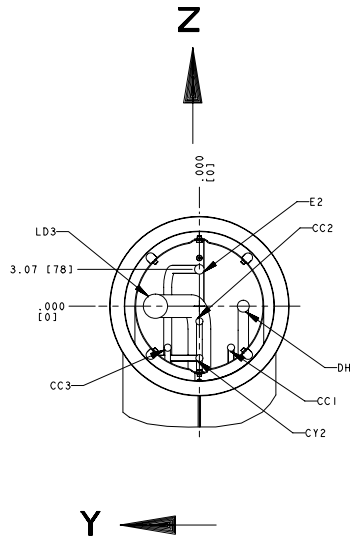

		DIM'S MEASURED FROM FLANGE CENTER	
PIPE	X	Y ±0.08	Z ±0.08
E2	-14.45±.08 [367±2]	0	3.07 [78]
DH	-14.45±.08 [367±2]	-3.66 [93]	0
LD3	-14.45±.08 [367±2]	3.66 [93]]	0
CC2	-14.45±.08 [367±2]	0	-1.26 [32]
CC1	-14.45±.08 [367±2]	-2.64 [67]	-3.46 [88]
CC3	-14.45±.08 [367±2]	2.64 [67]	-3.46 [88]
CY2	-14.45±.08 [367±2]	0	-4.33 [110]

4

DETAIL D
JC2 / QQSD
DIMENSIONAL TOLERANCE ± 0.08
ORIENTATION OPPOSITE OF SPECIFICATION 240
SCALE 1/4

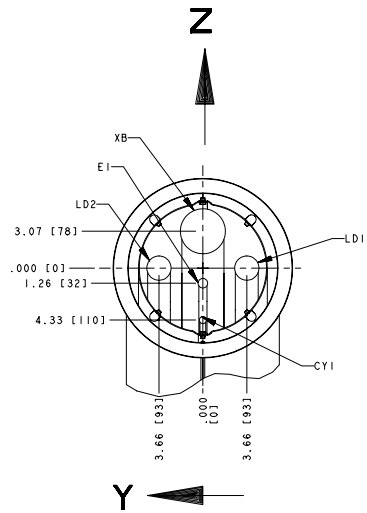

		DIM'S MEASURED FROM FLANGE CENTER	
PIPE	X	Y ±0.08	Z ±0.08
XB	-14.45±.08 [367±2]	0	3.07 [78]
LD2	-14.45±.08 [367±2]	3.66 [93]	0
LD1	-14.45±.08 [367±2]	-3.66 [93]	0
E1	-14.45±.08 [367±2]	0	-1.26 [32]
CY1	-14.45±.08 [367±2]	0	-4.33 [110]

4

DETAIL C
JC1 / QQSC
DIMENSIONAL TOLERANCE ± 0.08
ORIENTATION OPPOSITE OF SPECIFICATION 240
SCALE 1/4

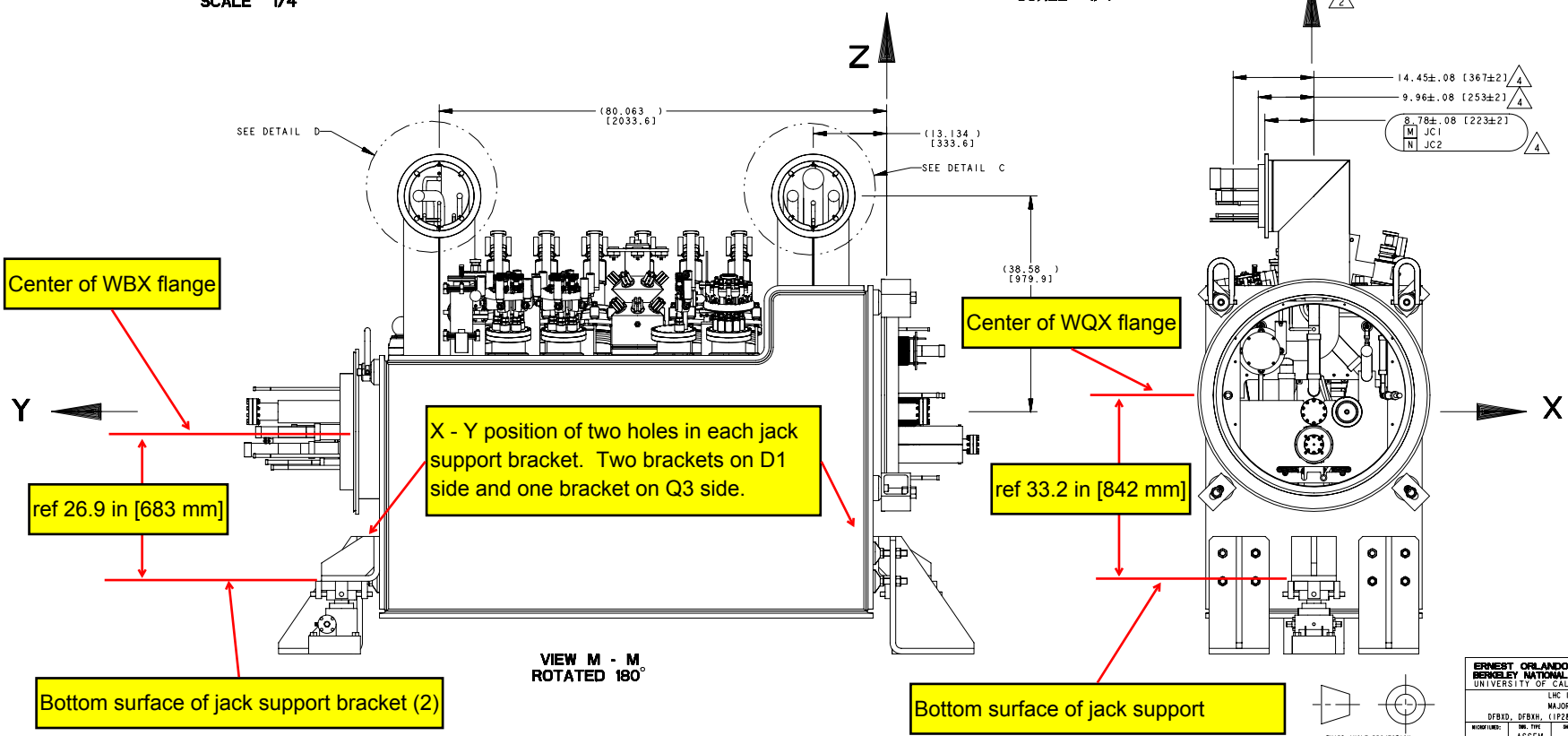

VIEW M - M
ROTATED 180°

ERNEST ORLANDO LAWRENCE BERKELEY NATIONAL LABORATORY
UNIVERSITY OF CALIFORNIA - BERKELEY
LHC IR FEEDBOX
MAJOR ASSEMBLY
DFBXD, DFBXH, (IP2&8, RIGHT) FEED BOX ASSY

MICROFILMED:	DWG. TYPE: ASSEM	SHOWN ON: -	SCALE: 13/100 DO NOT SCALE PRINTS
PATENT CLEAR:	DESIGN ACCT. NO.: Z5LCE2	CATEGORY CODE: LH2001	SHEET 7 OF 11 DWG. NO.: 24C3626 SIZE: C REV.: C

DWG. NO. 24C3626 SIZE C REV. 7

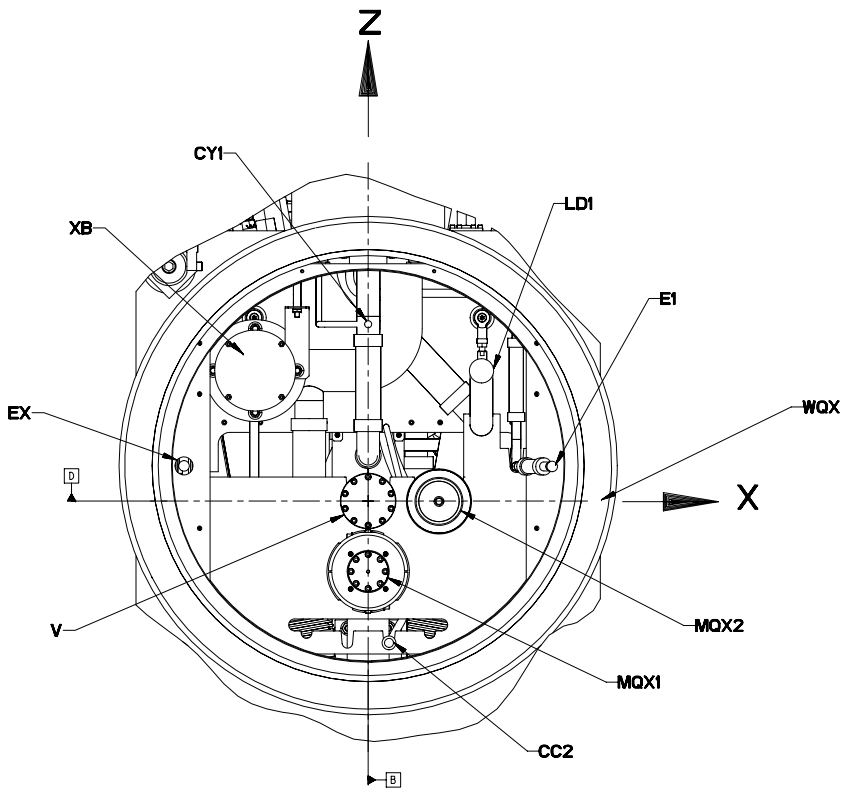

DETAIL F
SCALE 1/4

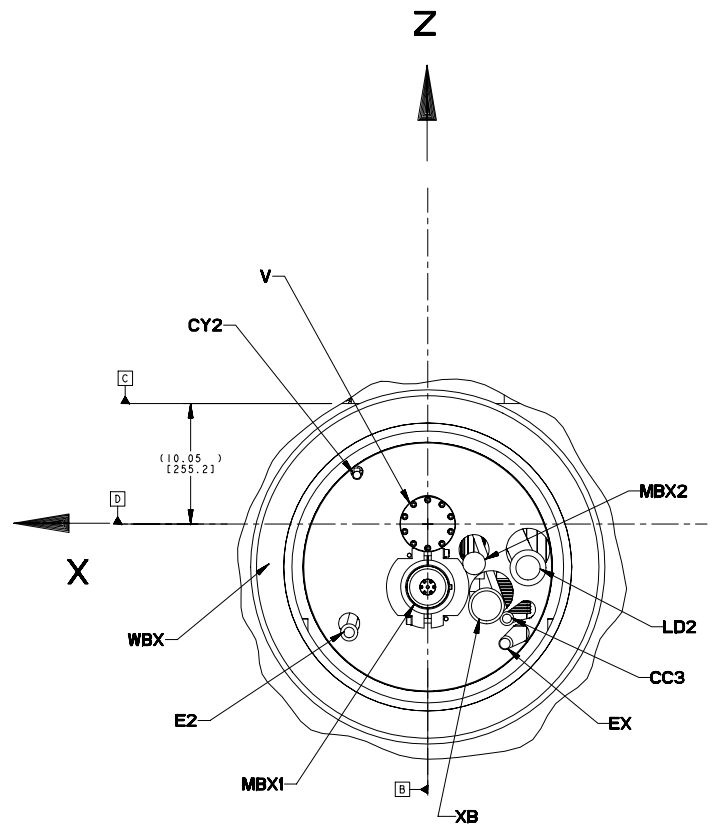

DETAIL E
SCALE 1/4

See next page

See next page

C

Q3 PIPING INTERFACE
PER SPEC. LHC-DFBX-ES-210.00 REV 1.0

DFBX	PIPE OD/ID		PIPE COORDINATES AT 300 K		
DFBX	OD in [mm]	ID in [mm]	X in [mm] ±.08	Z in [mm] ±.08	Y in [mm] ±.08
V	3.071 [78]	2.913 [73.99]	.000 [0]	.000 [0]	-2.032 [-51.61]
LD1	1.748 [44.4]	1.650 [41.91]	9.444 [239.88]	10.855 [275.72]	-6.299 [-159.99]
CC2	.626 [15.9]	.528 [13.41]	11.735 [44.07]	-11.822 [-300.28]	-6.299 [-159.99]
CY1	.626 [15.9]	.528 [13.41]	.000 [0]	14.742 [374.45]	-3.617 [-91.87]
E1	1.500 [38.1]	1.370 [34.8]	15.345 [389.76]	2.885 [73.28]	-6.299 [-159.99]
EX	1.500 [38.1]	1.370 [34.8]	-15.355 [-390.02]	2.929 [74.4]	-6.299 [-159.99]
MQX1	3.500 [88.9]	3.370 [85.6]	.000 [0]	-5.871 [-149.12]	-6.299 [-159.99]
MQX2	3.500 [88.9]	3.370 [85.6]	5.902 [149.91]	-.031 [-0.79]	-6.299 [-159.99]
WQX	41.535 [1055]	35.039 [890]	.000 [0]	2.953 [75.01]	.000 [0]
XB	3.500 [88.9]	3.370 [85.6]	-9.420 [-239.27]	10.876 [276.25]	-5.118 [-130]

C

D1 PIPING INTERFACE
PER SPEC. LHC-DFBX-ES-230.00 REV 1.1

	PIPE OD/ID		PIPE COORDINATES AT 300 K		
DFBX	OD in [mm]	ID in [mm]	X in [mm] ±.08	Z in [mm] ±.08	Y in [mm] ±.08
V	3.06 [77.7]	2.91 [73.9]	.000 [0]	.000 [0]	13.504 [343]
LD2	1.75 [44.5]	1.66 [42.2]	-8.359 [-212.32]	-3.650 [-92.71]	13.465 [342.01]
CC3	.63 [16]	.53 [13.5]	-6.604 [-167.74]	-7.879 [-200.13]	14.843 [377.01]
CY2 END TRANSITION	.63 [16] .50 [12.7]	.53 [13.5] .41 [10.4]	5.901 [149.89]	4.091 [103.91]	14.843 [377.01]
Ex	1.50 [38.1]	1.38 [35.1]	-6.441 [-163.6]	-9.963 [-253.06]	11.693 [297]
E2	1.50 [38.1]	1.38 [35.1]	6.546 [166.27]	-9.036 [-229.51]	11.693 [297]
MBX1	3.50 [88.9]	3.38 [85.9]	.000 [0]	-5.249 [-133.32]	3.780 [96.01]
MBX2 END TRANSITION	.50 [12.7] 1.47 [37.3]	.38 [9.7] 1.34 [34]	-3.862 [-98.09]	-3.279 [-83.29]	5.465 [138.81]
WBX	29.53 [750.1]	23.50 [596.9]	.000 [0]	-3.528 [-89.61]	.000 [0]
XB END TRANSITION	2.88 [73.2] 2.00 [50.8]	2.72 [69.1] 1.88 [47.8]	-4.896 [-124.36]	-6.819 [-173.2]	13.465 [342.01]

15

THIRD ANGLE PROJECTION

ERNEST ORLANDO LAWRENCE BERKELEY NATIONAL LABORATORY
UNIVERSITY OF CALIFORNIA - BERKELEY

LHC IR FEEDBOX
MAJOR ASSEMBLY
DFBXD, DFBXH, (IP2&8, RIGHT) FEED BOX ASSY

MICROFILMED:	DWG. TYPE ASSEM	DRAWN ON -	SCALE: 13/100	DO NOT SCALE PRINTS
PATENT CLEAR:	DESIGN ACCT. NO. Z5LCE2	CATEGORY CODE LH2001	DWG. NO. 24C3626	SIZE C REV. C

SHEET 6 OF 11

Q3 Piping Dimensional Inspection - DFBXD Pipe Coordinates at 300 K			
DFBX	**X in / mm ±0.08 in**	**Z in / mm ±0.08 in**	**Y in / mm ±0.08 in**
V	0.00 0.0	-2.95 -75.0	2.03 51.6
LD1	-9.44 -239.9	7.90 200.7	6.30 160.0
CC2	1.74 44.1	-14.77 -375.3	6.30 160.0
CY1	0.00 0.0	11.79 299.5	-3.62 -91.9
E1	15.34 389.8	-0.07 -1.7	-6.30 -160.0
EX	-15.36 -390.0	-0.02 -0.6	-6.30 -160.0
MQX1	0.00 0.0	-8.82 -224.1	-6.30 -160.0
MQX2	5.90 149.9	-2.98 -75.8	-6.30 -160.0
WQX	0.00 0.0	0.00 0.0	0.00 0.0
XB	-9.42 -239.3	7.92 201.3	-5.12 -130.0

D1 Piping Dimensional Inspection - DFBXD Pipe Coordinates at 300 K			
DFBX	**X in / mm ±0.08 in**	**Z in / mm ±0.08 in**	**Y in / mm ±0.08 in**
V	0.00 0.0	3.53 89.6	13.50 343.0
LD2	-8.36 -212.3	-0.12 -3.1	13.46 342.0
CC3	-6.60 -167.7	-4.35 -110.5	14.84 377.0
CY2	5.90 149.9	7.62 193.5	14.84 377.0
EX	-6.44 -163.6	-6.44 -163.5	11.69 297.0
E2	6.55 166.3	-5.51 -139.9	11.69 297.0
MBX1	0.00 0.0	-1.72 -43.7	3.78 96.0
MBX2	-3.86 -98.1	0.25 6.3	5.46 138.8
WBX	0.00 0.0	0.00 0.0	0.00 0.0
XB	-4.90 -124.4	-3.29 -83.6	13.46 342.0

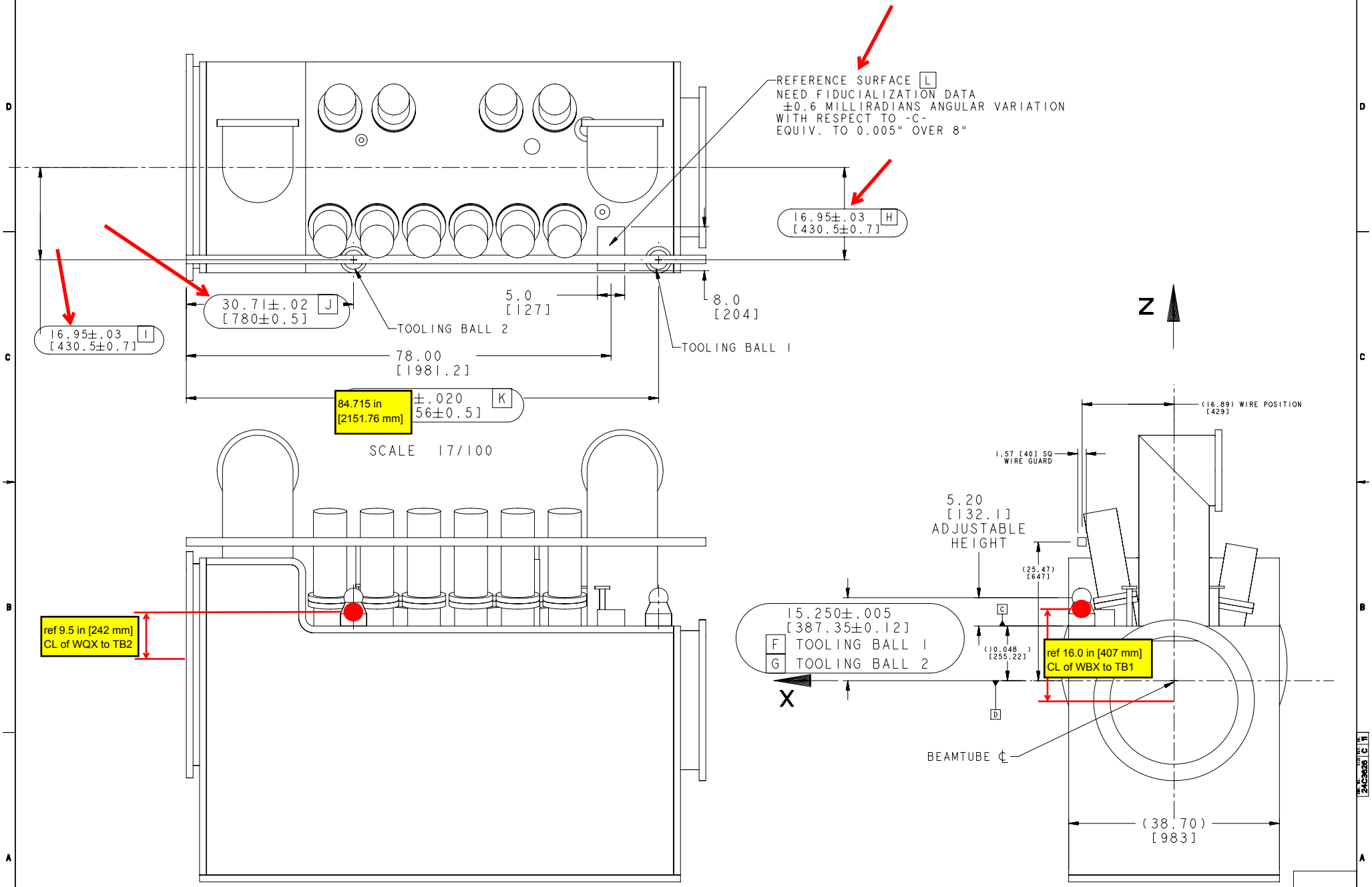

FIDUCIAL LAYOUT INFORMATION

THIRD ANGLE PROJECTION

ERNEST ORLANDO LAWRENCE BERKELEY NATIONAL LABORATORY
UNIVERSITY OF CALIFORNIA - BERKELEY

LHC IR FEEDBOX
MAJOR ASSEMBLY
DFBXD, DFBXH, (IP2&8, RIGHT) FEED BOX ASSY

MICROFILMED:	DWG. TYPE: ASSEM	DRAWN ON: -	SCALE: 13/100 DO NOT SCALE PRINTS
			SHEET 1 OF 1
PATENT CLEAR:	DESIGN ACCT. NO.: Z5LCE2	CATEGORY CODE: LH2001	DWG. NO.: 24C3626 SIZE: C REV.: C

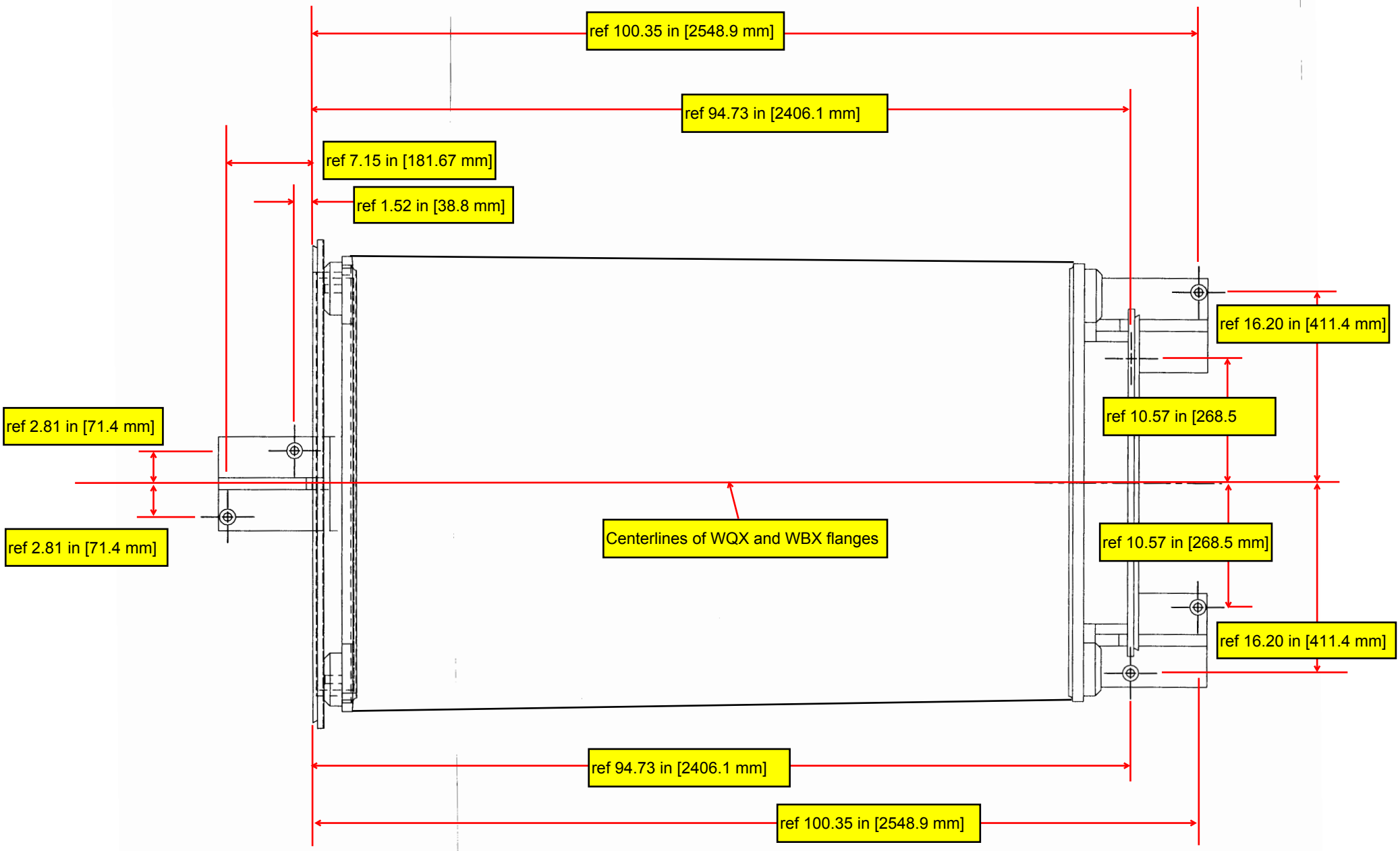
ref 100.35 in [2548.9 mm]
ref 94.73 in [2406.1 mm]
ref 7.15 in [181.67 mm]
ref 1.52 in [38.8 mm]
ref 16.20 in [411.4 mm]
ref 10.57 in [268.5
ref 2.81 in [71.4 mm]
ref 2.81 in [71.4 mm]
Centerlines of WQX and WBX flanges
ref 10.57 in [268.5 mm]
ref 16.20 in [411.4 mm]
ref 94.73 in [2406.1 mm]
ref 100.35 in [2548.9 mm]