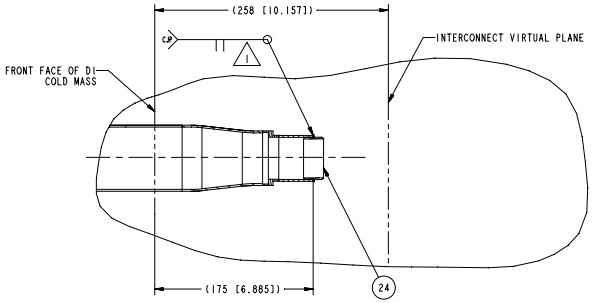

SECTION C-C
xb_1 LINE
IR2L & IR8L LOCATION

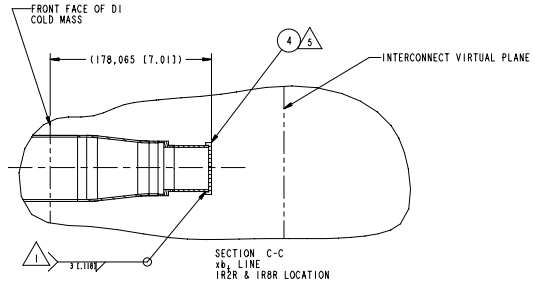

SECTION C-C
xb_1 LINE
IR2R & IR8R LOCATION

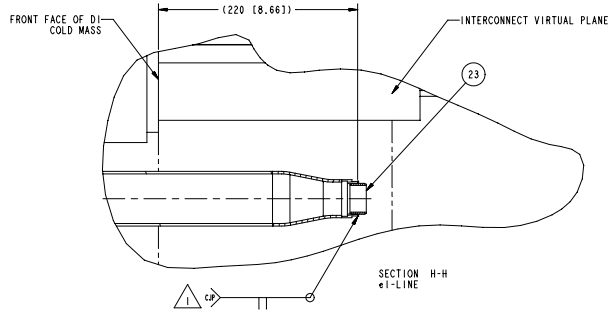

SECTION H-H
e1-LINE

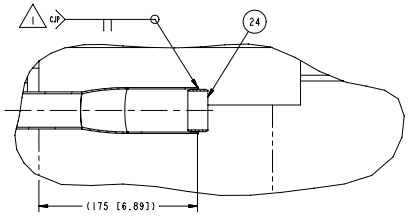

SECTION G-G
xb-LINE
IR2R & IR8R LOCATION

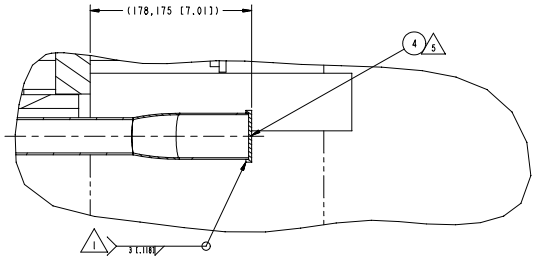

SECTION G-G
xb-LINE
IR2L & IR8L LOCATION

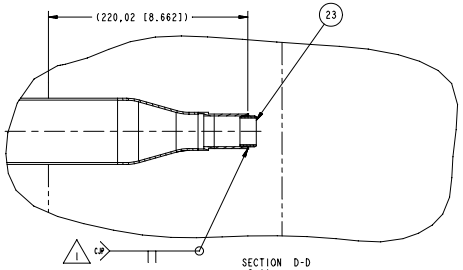

SECTION D-D
e2 line

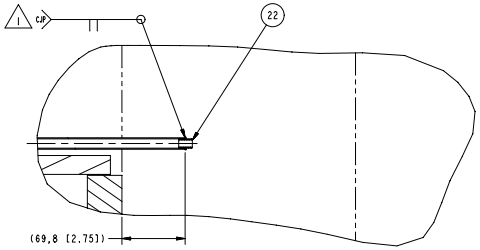

SECTION E-E
cy_2-LINE
IR2R & IR8R LOCATION

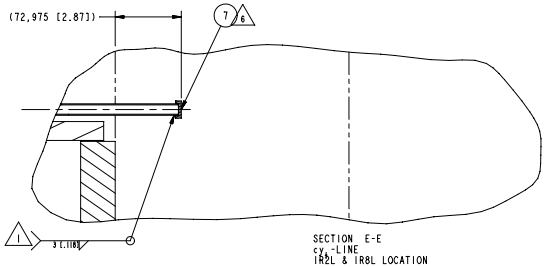

SECTION E-E
cy_1-LINE
IR2L & IR8L LOCATION

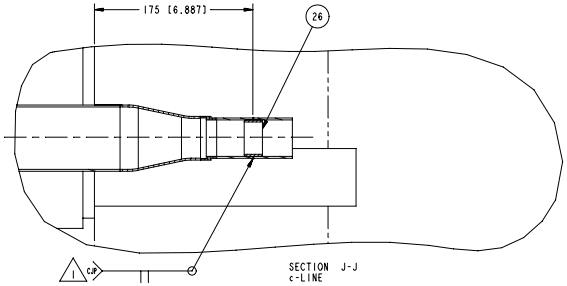

SECTION J-J
c-LINE

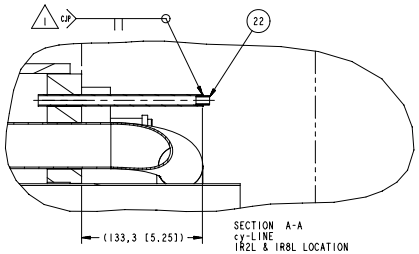

SECTION A-A
cy-LINE
IR2L & IR8L LOCATION

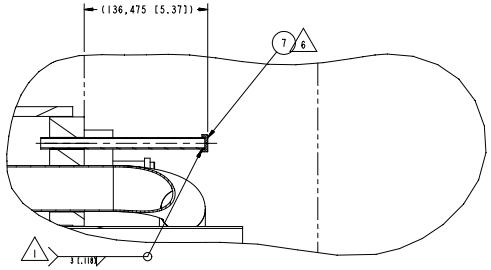

SECTION A-A
cy-LINE
IR2R & IR8R LOCATION

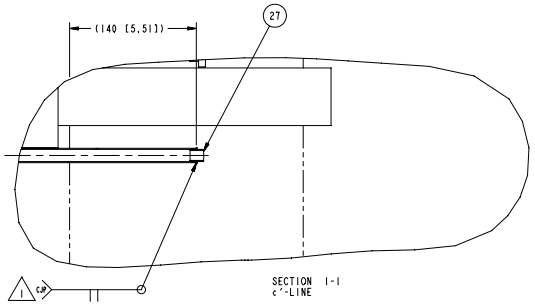

SECTION I-I
c'-LINE

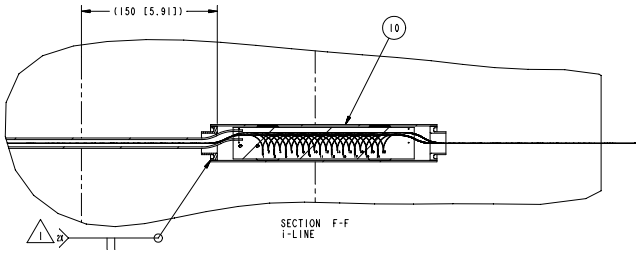

SECTION F-F
i-LINE

BROOKHAVEN NATIONAL LABORATORY BROOKHAVEN SCIENCE ASSOCIATES UPTON, N.Y. 11973			
SIZE E	DRAWING NUMBER: 14130017		REV. A
D.C. CATEGORY:	SCALE: 1/2		SHEET 2 OF 3

DWG NO 14130017 SHT 2 OF 3 REV A