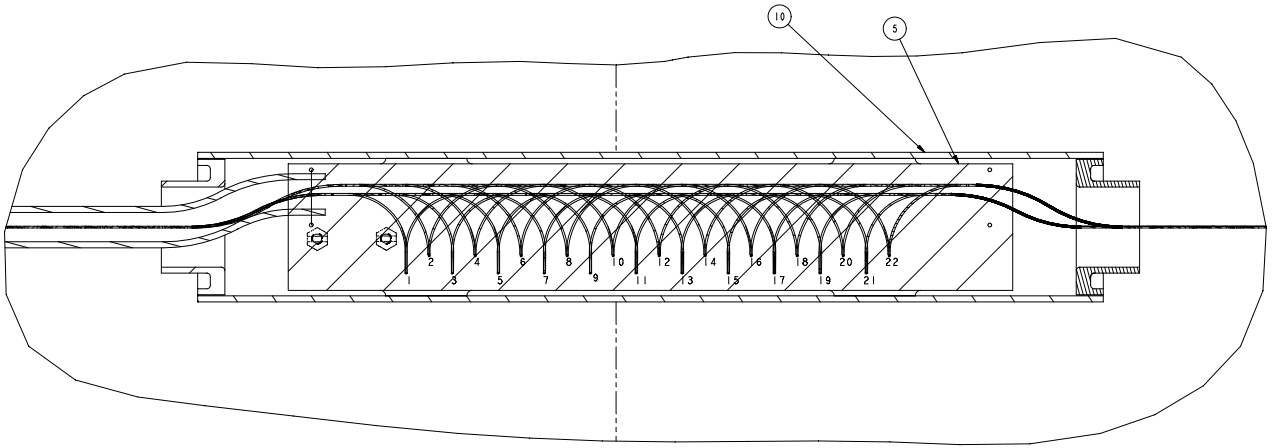

SECTION F-F
SCALE 2.000 (4)

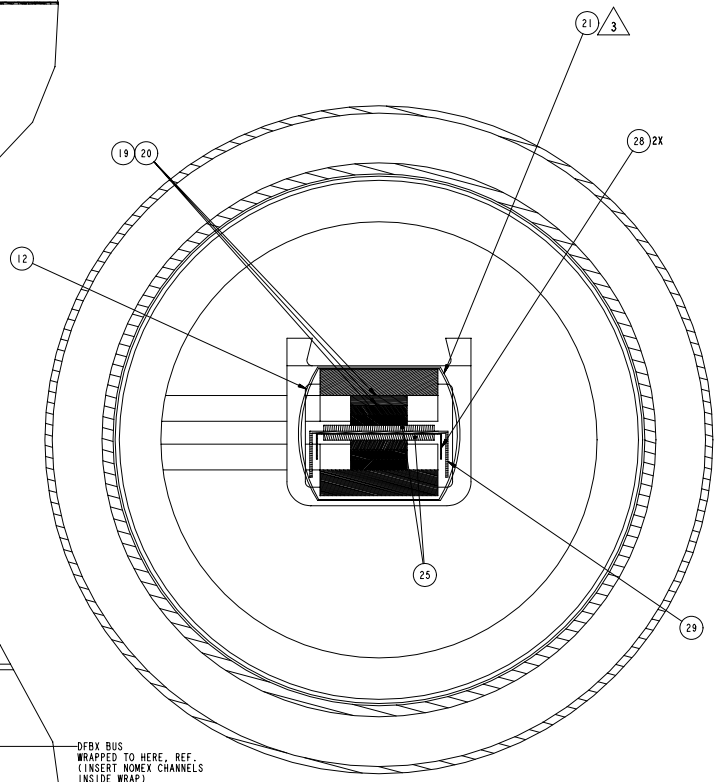

SECTION P-P
SCALE 4.000

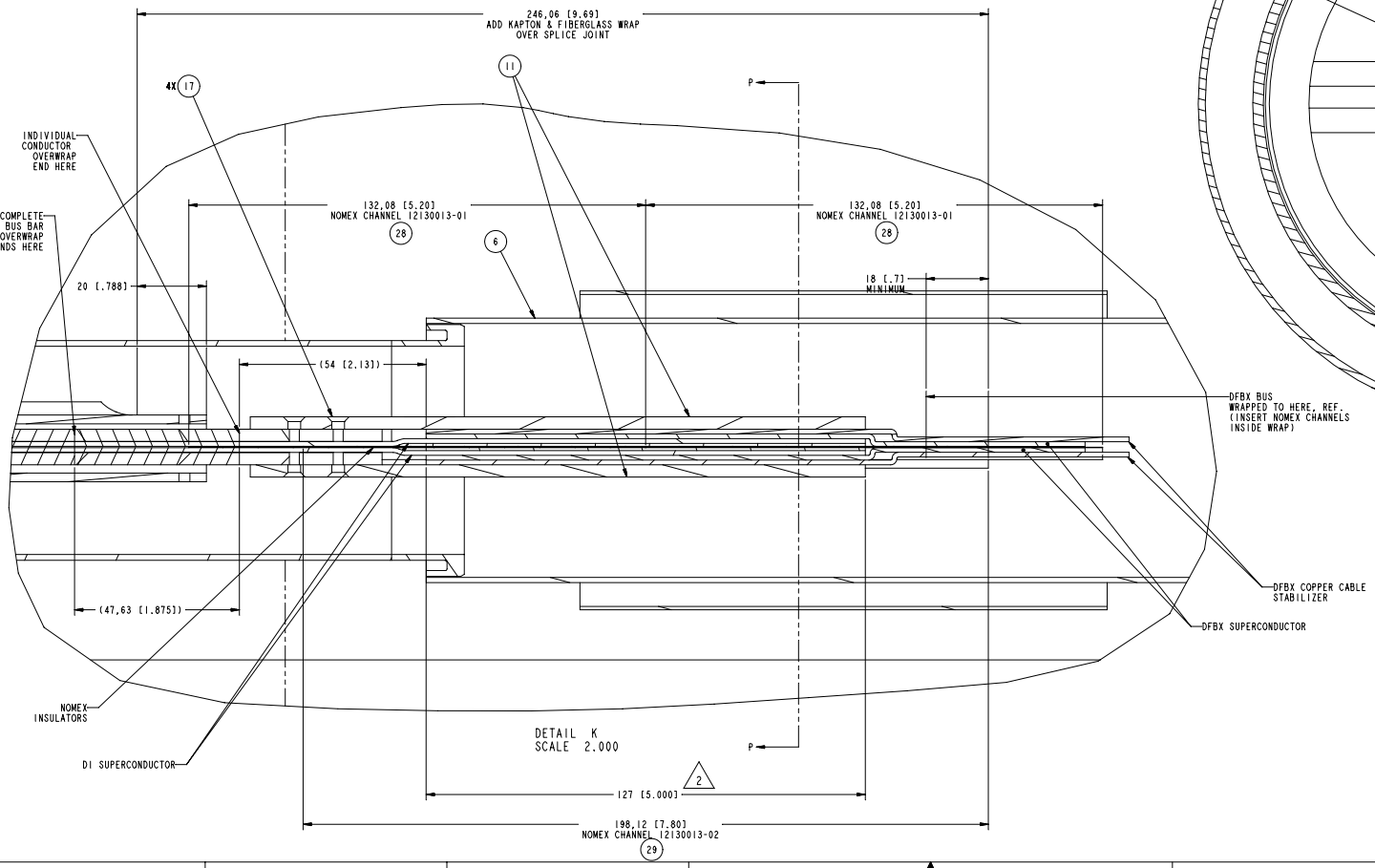

DETAIL K
SCALE 2.000

BROOKHAVEN NATIONAL LABORATORY BROOKHAVEN SCIENCE ASSOCIATES UPTON, N.Y. 11973			
SIZE E	DRAWING NUMBER: 14130017		REV. A
D.C. CATEGORY:	SCALE: 1/2 & NOTED		SHEET 3 OF 3

DWG NO 14130017 SHT 3 OF 3 A