Officially Released to the LBNL Document Control Center
Released: January 23rd, 2006 DCC Auth Key: 3SMCWVXCSM

Downloaded by: Phil Pfund at January 24, 2006 06:05:12

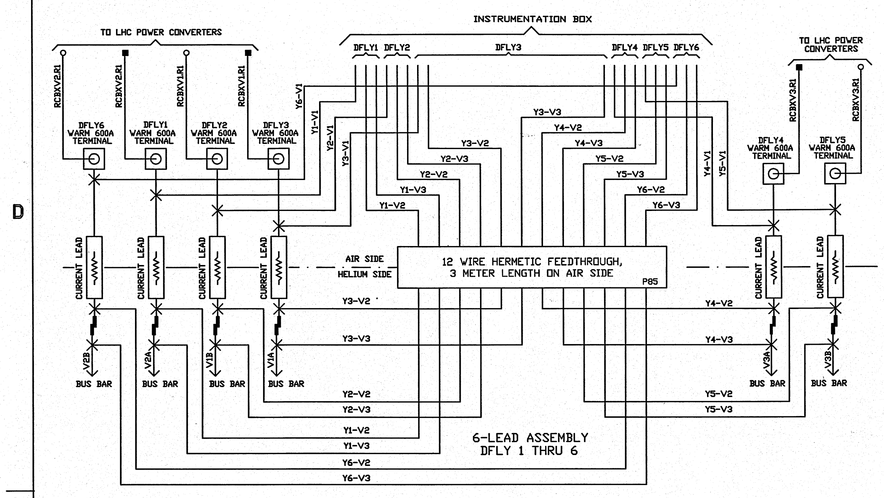

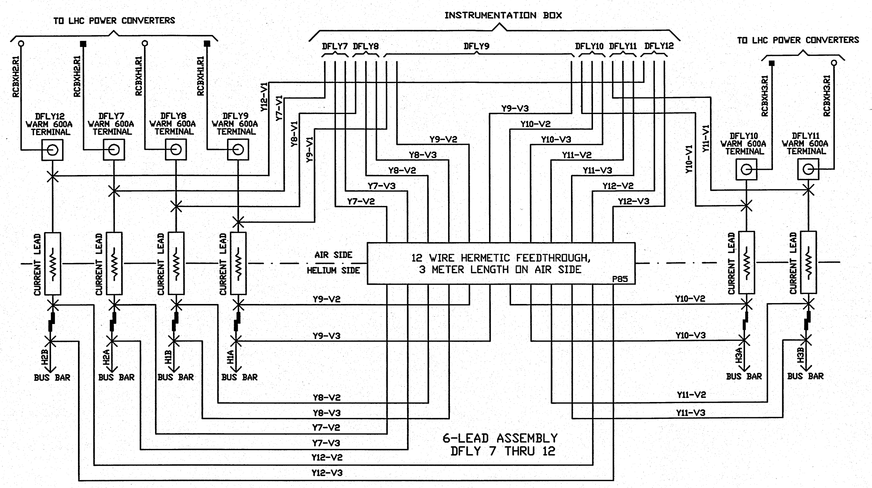

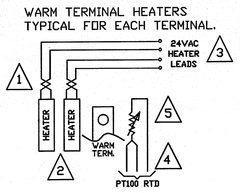

1

600A LEADS (DFLY)

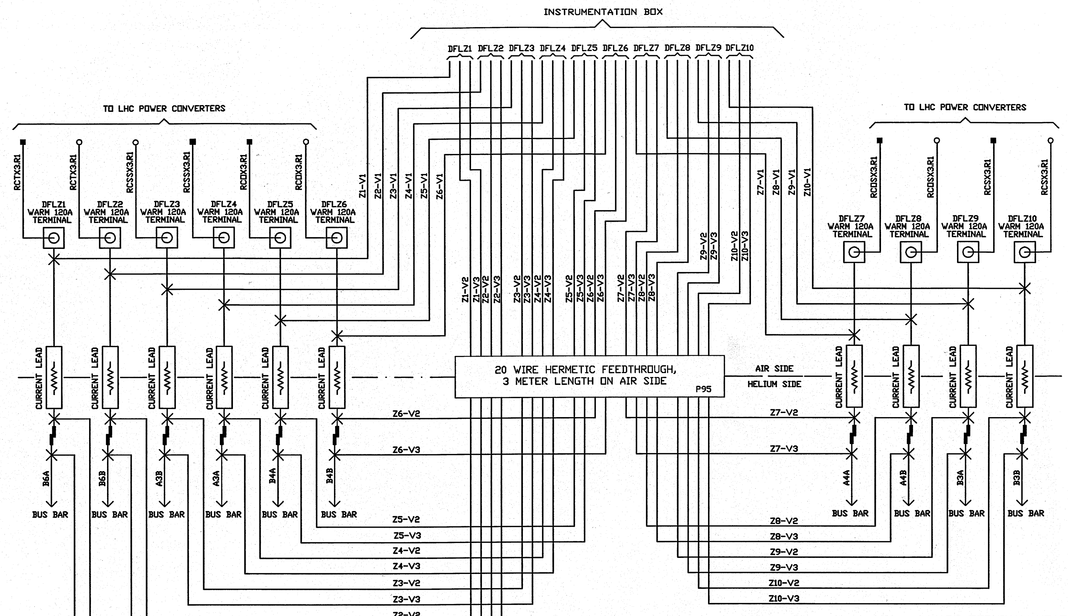

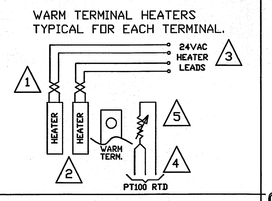

2

120A LEADS (DFLZ)

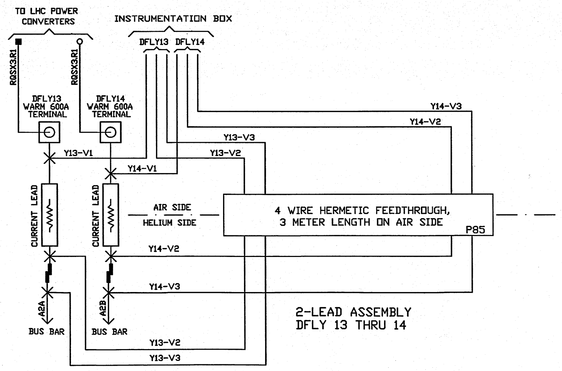

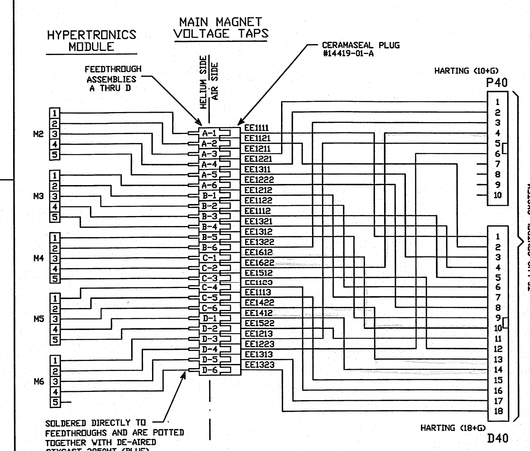

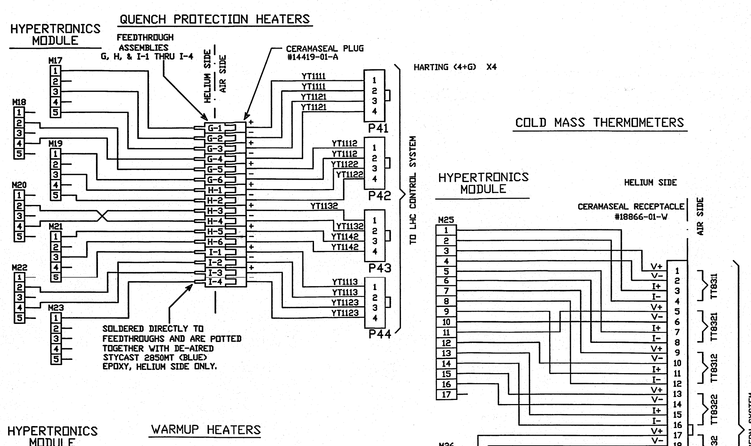

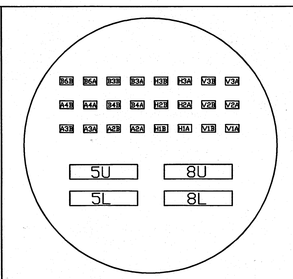

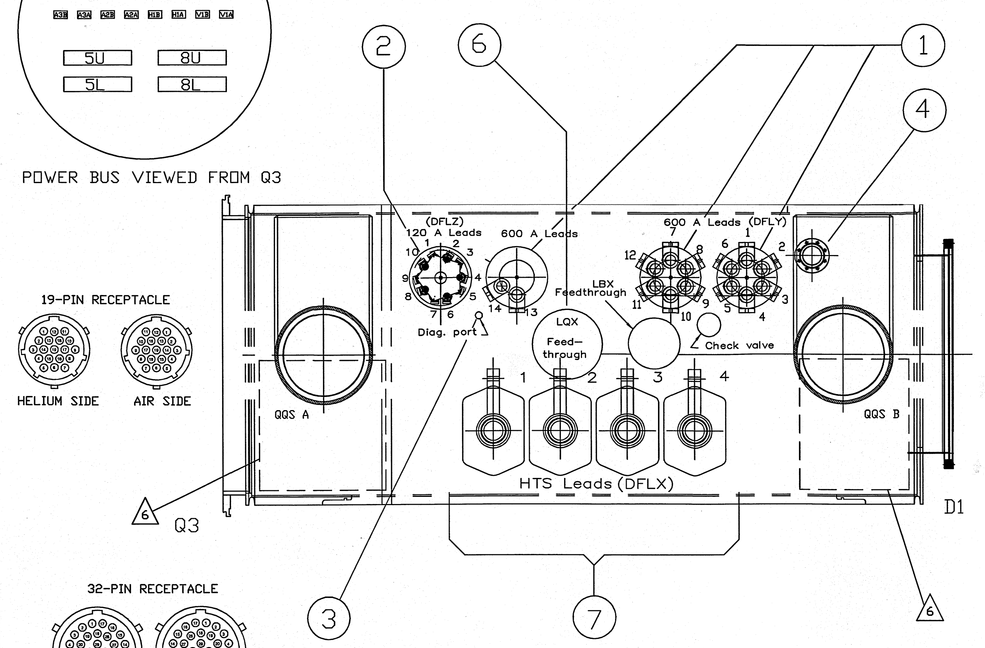

DFBXB (IR1 R)

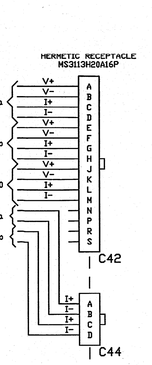

3

LEAD CHAMBER SERVICE PORT

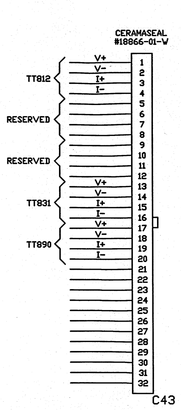

4

CRYOGENIC PIPING SIGNALS

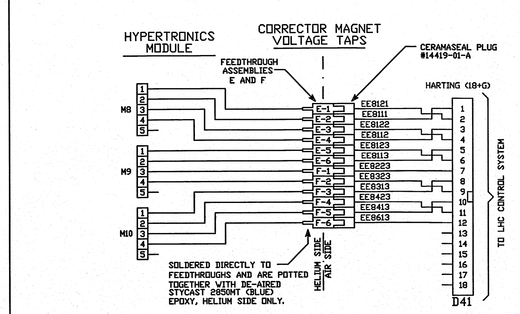

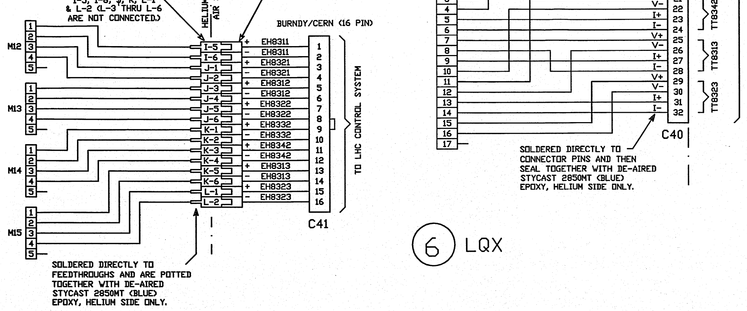

6 LQX

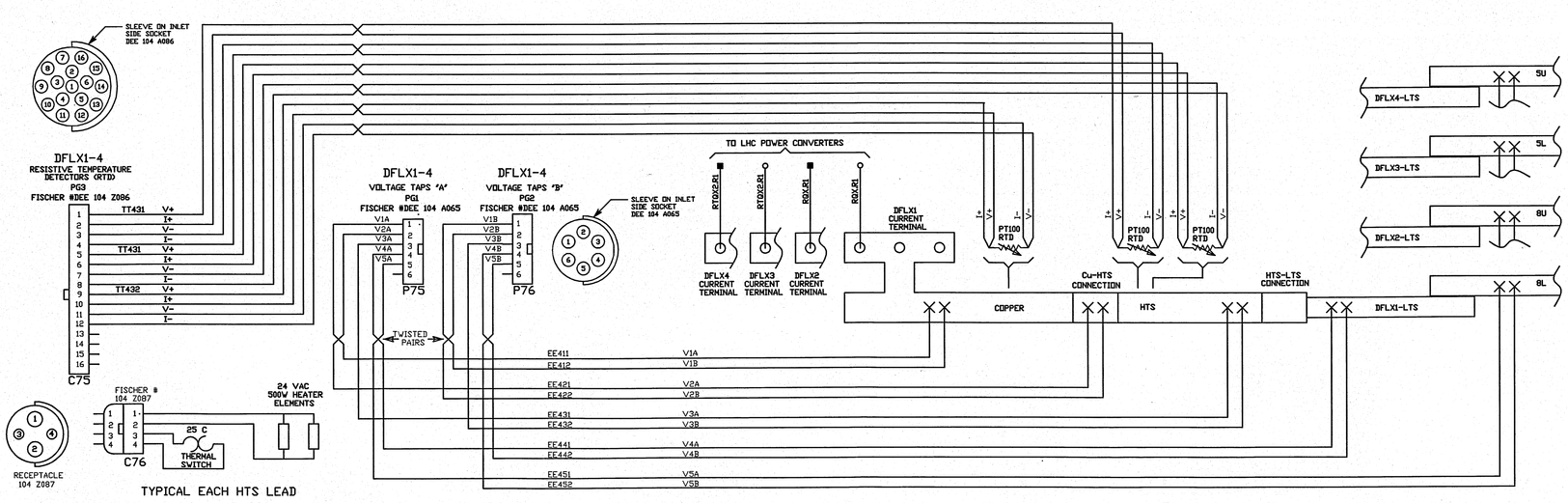

7

HTS LEADS (DFLX)

NOTES:

1. BUNDLE AND LABEL EACH 4-WIRE HEATER CABLE WITH "DH411", FOLLOWED BY THE CURRENT LEAD DESIGNATION, FOR EXAMPLE "Y13". WIRE LENGTH TO BE 3 METERS.
2. DFLY HEATER TOTAL POWER: 32W @ 24V, DFLZ HEATER TOTAL POWER: 20W @ 24V.
3. HEATERS TO BE POWERED IN PARALLEL WITH 24V SUPPLY. CONNECTIONS MADE AT CERN.
4. BUNDLE AND LABEL EACH 3-WIRE RTD CABLE WITH "TT430", FOLLOWED BY THE CURRENT LEAD DESIGNATION, FOR EXAMPLE "Z09". WIRE LENGTH TO BE 3 METERS.
5. SENSOR RESISTANCE PER IEC 751, CLASS B.
6. LOCATIONS OF CERN INSTRUMENT BOX

SYMBOL LEGEND
■ = A SIDE
○ = B SIDE
X = SOLDER JOINT
= CORRECTOR BUS SPLICE (600A LAP JOINTS PER LBNL PROCEDURE M982 AND 120A LAP JOINTS PER LBNL PROCEDURE M983.)
= MAIN BUS SPLICE PER LBNL PROCEDURE M985

REV	DWG	CHK	ZONE	DATE	CHANGES
C			D6		REDRAW TO REFLECT ACTUAL BUILD: EC1612 MOVED FROM D40-14 TO D40-10, EC1412 MOVED FROM D40-10 TO D40-14, EC1622 MOVED FROM D40-13 TO P40-4, EC1422 MOVED FROM P40-4 TO D40-13.
B			C7, A5		1) a) ADDED 19 AND 32 PIN CONN. PINOUTS, b) CORRECTED C75 WIRING, c) CHANGED C42, C43, C44.
			A1-B3		2) a) ADDED NOTES b) ADDED VIEW OF POWER BUSS.
			A4-A6		3) IN BOX 7: a) ADDED CERN-SPECIFIED CONNECTOR DESIGNATIONS, b) CHANGED HTS LEAD THERMOMETER PINOUTS IN C75, c) CHANGED HTS LEAD VOLTAGE TAP PINOUTS IN P75 AND P76.
			B4-C7		4) IN BOX 6: a) CHANGED CONNECTORS FROM FISCHER TO HARTING AND BURNDY b) CHANGED VOLTAGE TAP DESIGNATIONS, c) ADDED CERN Q,P, HEATER DESIGNATIONS, c) CHANGED WARM UP HEATER DESIGNATION, e) CHANGED C40 PINOUTS AND ADDED EX DESIGNATIONS.
			B8		5) IN BOX 3: CHANGED CONNECTOR CONFIGURATION.
			B5-C3		2) IN BOX 2: a) SEPARATE POWER FOR HEATERS, b) WIRE LABELS SIMPLIFIED, c) CHANGED FEEDTHROUGH DESIGNATION
A			D8-C5		1) IN BOX 1: a) SEPARATE POWER FOR HEATERS, b) WIRE LABELS SIMPLIFIED, c) CHANGED FEED THROUGH DESIGNATION.

DESCRIPTION	MATERIAL	MAT. LOCATION

TOLERANCES: UNLESS OTHERWISE SPECIFIED X.X ± 0.1, X.XX ± 1/64, X.XX ± 0.05, X.XXX ± 0.010, Angles ± 1.00°, FINISH 125 RMS. DO NOT SCALE PRINT. THREADS ARE CLASS 2. CHAMFER EDGES ALL SCREW THREADS 30°. CUT DOWN, 1.5 THREAD RELIEF ON MACHINED THREADS. BREAK EDGES .016 MAX. ON MACHINED WORK. REMOVE BURRS, WELD SPLATTER & LOOSE SCALE IN ACCORDANCE WITH ASME Y14.5M & B46.1

SHOP ORDERS: SER NO., ACCT NO., REQD, DATE, ISSD, REL, TO, SURFACE TREATMT, IDENT METHOD, PROJECT NUMBER, PROJECT NAME

DWN: J. STIRKKINEN 04-23-02; CHK: R. BINGHAM 12/14/05; APR: J. ZBASNIK 12/16/05

ERNEST ORLANDO LAWRENCE BERKELEY NATIONAL LABORATORY
UNIVERSITY OF CALIFORNIA - BERKELEY

LHC IR FEEDBOX
ELECTRICAL
DFBXB (IR1 R) WIRING DIAGRAMS

MICROFILMED: | DWG. TYPE: ASSEMBLY | SHOWN ON | SCALE: 1/1 | SHEET 1 OF 1 | DO NOT SCALE PRINTS
PATENT CLEAR: | DESIGN ACCT. NO.: Z5LCE2 | CATEGORY CODE: LH2004 | 25I6146 | REV. C