Officially Released to the LBNL Document Control Center
Released: January 23rd, 2006 DCC Auth Key: BCZULVZ2OV
Downloaded by: Phil Pfund at January 24, 2006 06:08:15

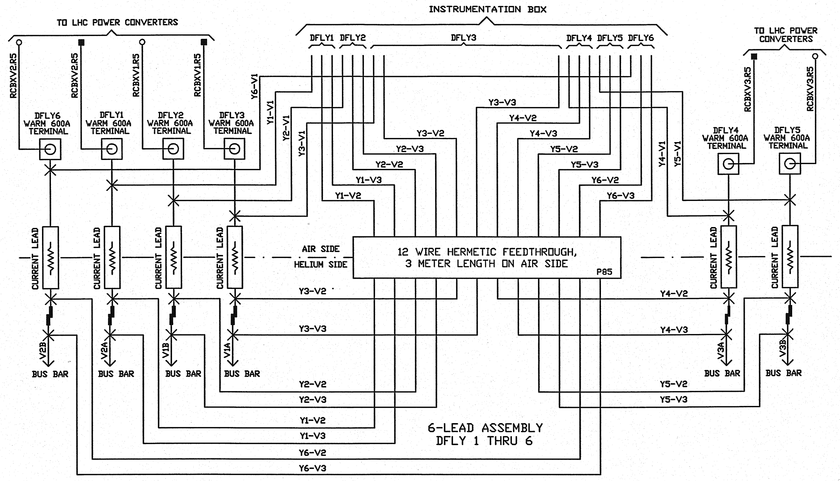


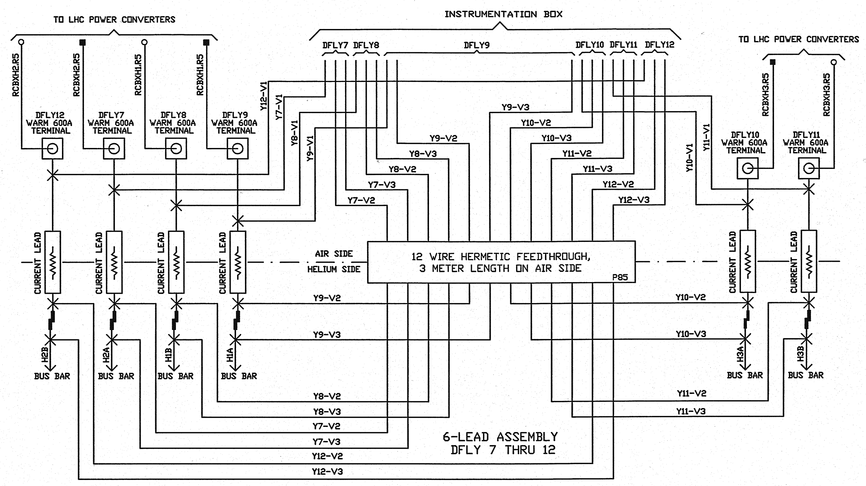


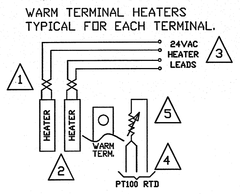


1

600A LEADS (DFLY)

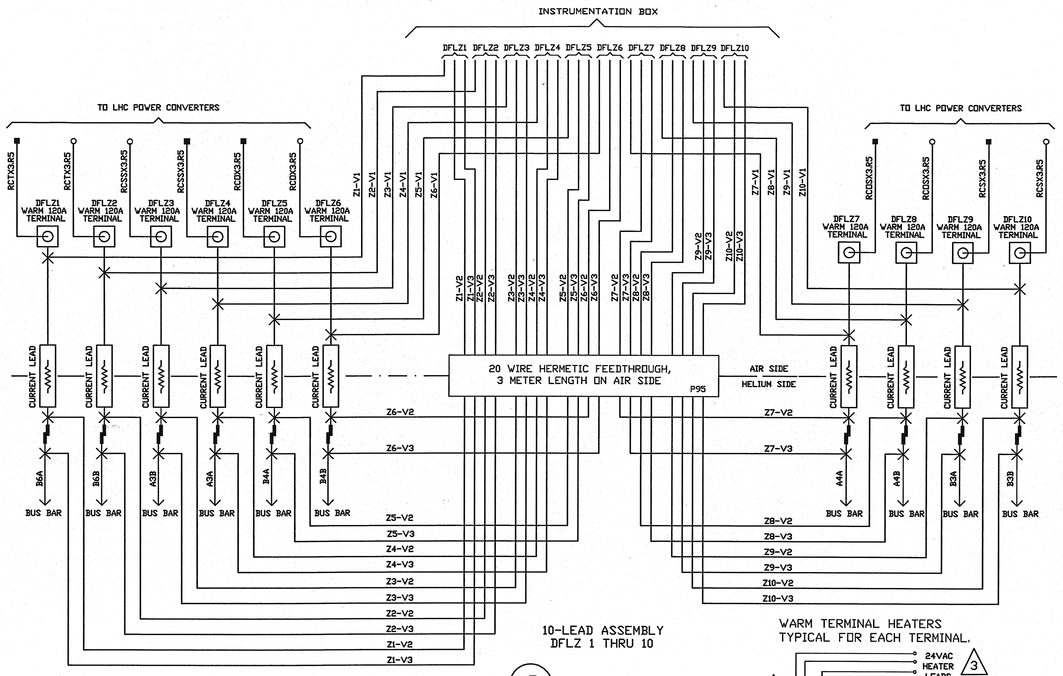


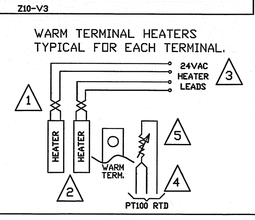


2

120A LEADS (DFLZ)

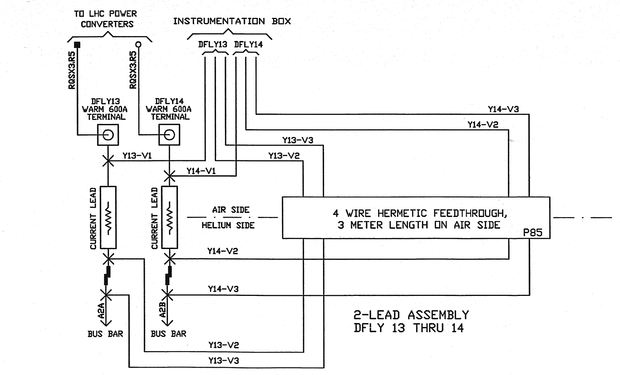


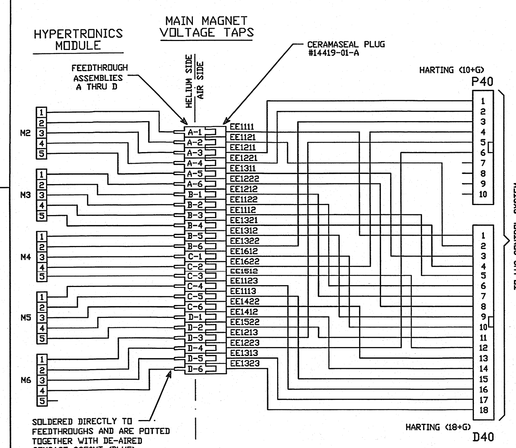


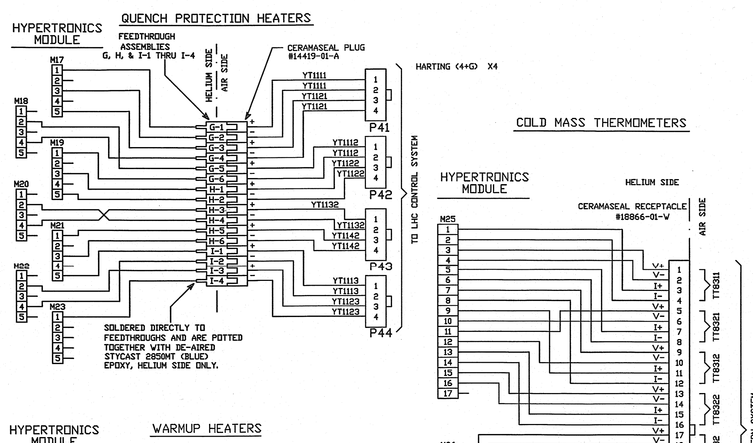


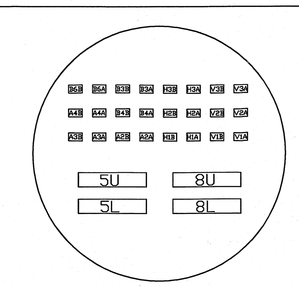


POWER BUS VIEWED FROM Q3

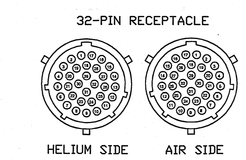


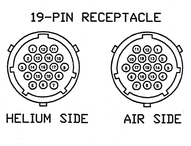


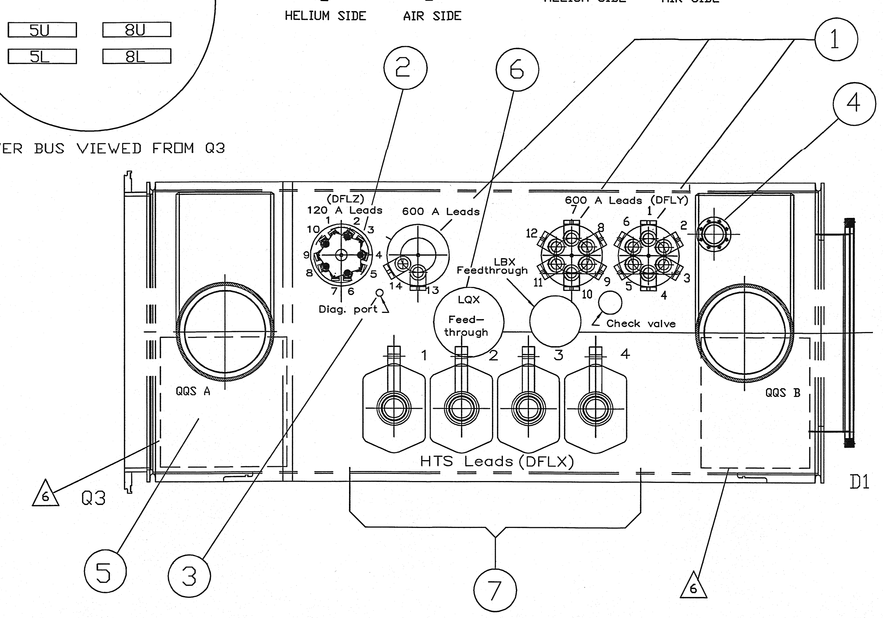


DFBXF (IR5 R)

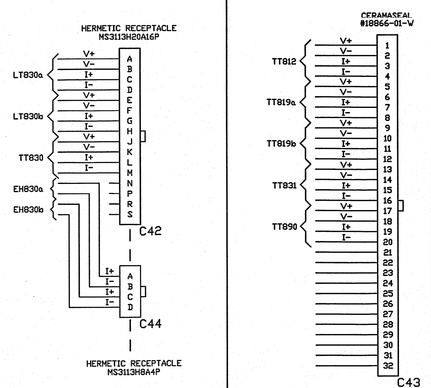


3

LEAD CHAMBER SERVICE PORT




4

CRYOGENIC PIPING SIGNALS

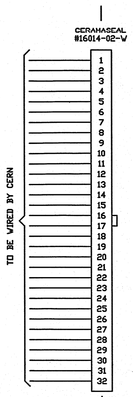


5

PRESSURE TAP AND HELIUM GUARD VOLUME

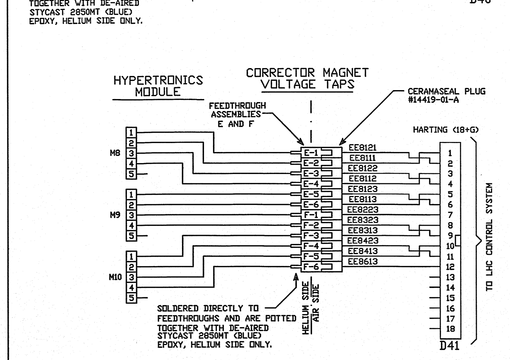


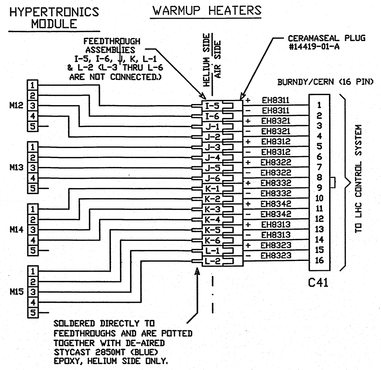


6 LQX

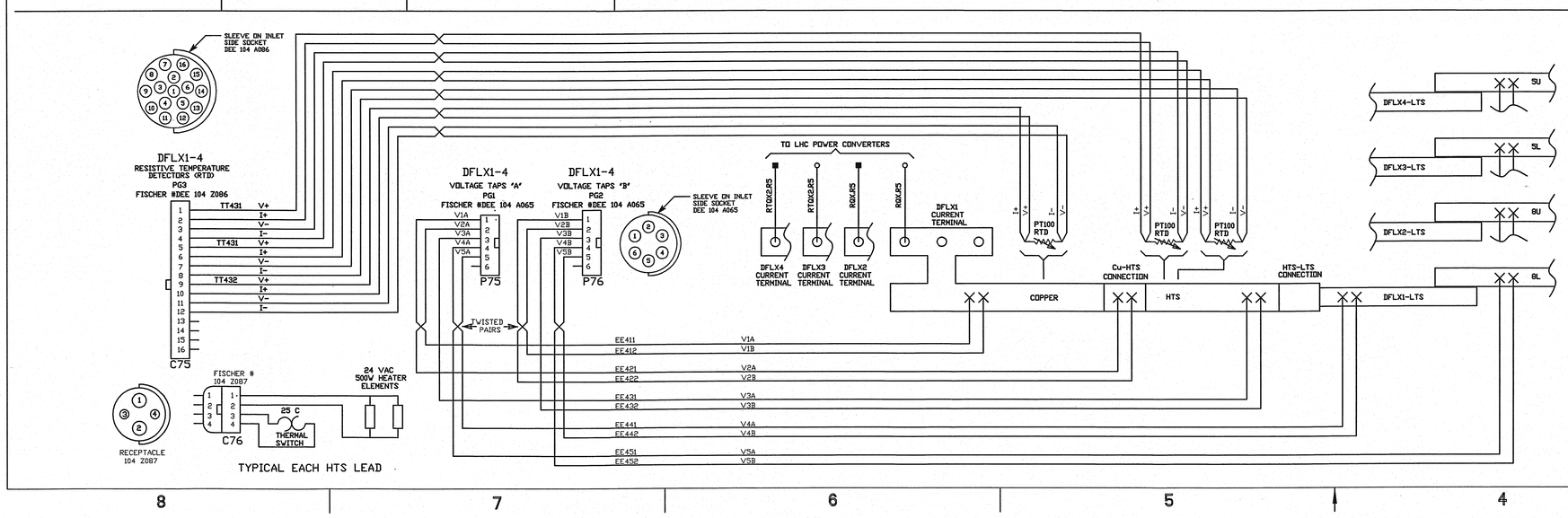


7

HTS LEADS (DFLX)

| SYMBOL LEGEND |
|---|
| ■ = A SIDE |
| ○ = B SIDE |
| X = SOLDER JOINT |
| = CORRECTOR BUS SPLICE |
| 600A LAP JOINTS PER LBNL PROCEDURE M982 AND 120A LAP JOINTS PER LBNL PROCEDURE M983. |
| = MAIN BUS SPLICE PER LBNL PROCEDURE M985 |

NOTES:

1. BUNDLE AND LABEL EACH 4-WIRE HEATER CABLE WITH "EH411", FOLLOWED BY THE CURRENT LEAD DESIGNATION, FOR EXAMPLE "113". WIRE LENGTH TO BE 3 METERS.
2. DFLY HEATER TOTAL POWER: 32V @ 24V, DFLZ HEATER TOTAL POWER: 20V @ 24V.
3. HEATERS TO BE POWERED IN PARALLEL WITH 24V SUPPLY. CONNECTIONS MADE AT CERN.
4. BUNDLE AND LABEL EACH 3-WIRE RTD CABLE WITH "TT491", FOLLOWED BY THE CURRENT LEAD DESIGNATION, FOR EXAMPLE "209". WIRE LENGTH TO BE 3 METERS.
5. SENSOR RESISTANCE PER IEC 751, CLASS B.
6. LOCATIONS OF CERN INSTRUMENT BOX

| REV | DWG | CHK | ZONE | DATE | CHANGES |
|---|---|---|---|---|---|
| C | | | | | REDRAW TO REFLECT ACTUAL BUILD: EE1612 MOVED FROM D40-14 TO D40-10, EE1412 MOVED FROM D40-10 TO D40-14, EE1622 MOVED FROM D40-13 TO P40-4, EE1423 MOVED FROM P40-4 TO D40-13. |
| B | | | | A6 | 1) a) ADDED 19 AND 32 PIN CONN. PINOUTS, b) CORRECTED C75 WIRING, c) CHANGED C42, C43, C44. |
| | | | | C7, A5 | 2) a) ADDED NOTES b) ADDED VIEW OF POWER BUSS. |
| | | | | A1-B3 | |
| | | | | A4-A8 | 3) IN BOX 7: a) ADDED CERN-SPECIFIED CONNECTOR DESIGNATIONS, b) CHANGED HTS LEAD THERMOMETER PINOUTS IN C75, c) CHANGED HTS LEAD VOLTAGE TAP PINOUTS IN P75 AND P76. |
| | | | | B4-C6 | 4) IN BOX 6: a) CHANGED CONNECTORS FROM FISCHER TO HARTING AND BURNDY b) CHANGED VOLTAGE TAP, HEATER AND TT DESIGNATIONS. c) CHANGED C40 PINOUTS AND ADDED EE DESIGNATIONS. |
| | | | | B8 | 5) IN BOX 5: CHANGED CONNECTOR CONFIGURATION. |
| | | | | B1-C3 | 6) IN BOX 8: a) SEPARATE POWER FOR HEATERS, b) WIRE LABELS SIMPLIFIED, c) CHANGED FEEDTHROUGH DESIGNATION |
| A | | | | B4-C8 | 7) IN BOX 1: a) SEPARATE POWER FOR HEATERS, b) WIRE LABELS SIMPLIFIED, c) CHANGED FEED THROUGH DESIGNATION. |

UNLESS OTHERWISE SPECIFIED
TOLERANCES: X.X ± 0.1; X.XX ± 0.05; X.XXX ± 0.010; DIM. ± 1/64; Angles ± 1.00°; FINISH 125
DO NOT SCALE PRINT
THREADS ARE CLASS 2
CHAMFER EDGES .010 MAX. ALL SCREW THREADS 30°
CUT ROUND, 1.5 THERMAL RELIEF ON MACHINED THREADS
BREAK EDGES .015 MAX. ON ROUGHED WORK
REMOVE BURRS, WELD SPLATTER & LOOSE SCALE
IN ACCORDANCE WITH ASME Y14.5M & B46.1

SHOP ORDERS: SER NO. / NO. REQD / ACCT NO. / DWG / REL / TO / SURFACE TREATMT / IDENT METHOD / PROJECT NUMBER / PROJECT MANG.

| | | |
|---|---|---|
| DWN | J. STIRKKINEN | DATE 04-23-02 |
| CHK | B. BINGHAM | DATE 12/16/05 |
| APR | J. ZBASNIK | DATE 12/16/05 |

| DESCRIPTION | MATERIAL | MAT. LOCATION |
|---|---|---|
| ASSEMBLY | | |

ERNEST ORLANDO LAWRENCE BERKELEY NATIONAL LABORATORY
UNIVERSITY OF CALIFORNIA - BERKELEY

LHC IR FEEDBOX
ELECTRICAL
DFBXF (IR5 R) WIRING DIAGRAMS

MICROFILMED: | DWG. TYPE: ASSEMBLY | SHOWN ON | SCALE: 1/1 | DO NOT SCALE PRINTS | SHEET 1 OF 1
PATENT CLEAR: | DESIGN ACCT. NO.: Z5LCE2 | CATEGORY CODE: LH2004 | DWG. NO.: 25I6186 | REV.: C