REV.	DESCRIPTION	DRAWN / APPD.	DATE / DATE
	E.R #xxxx		

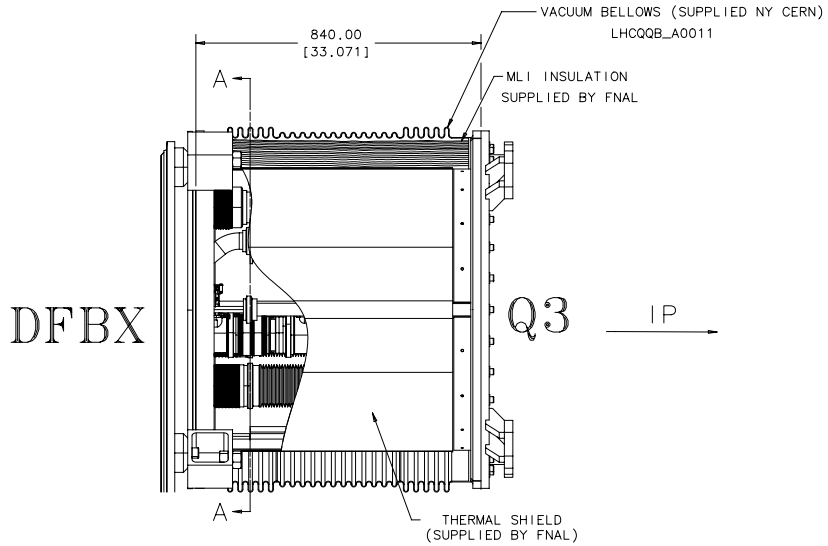

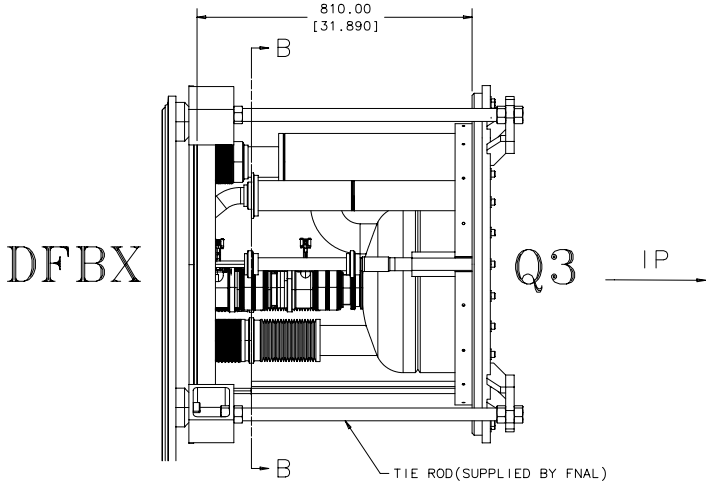

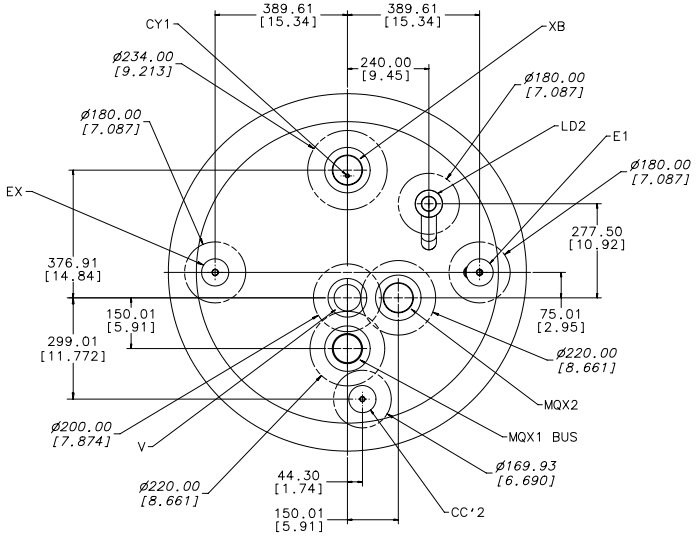

DFBX END VIEW
(LOOKING AWAY FROM IP)

A–A

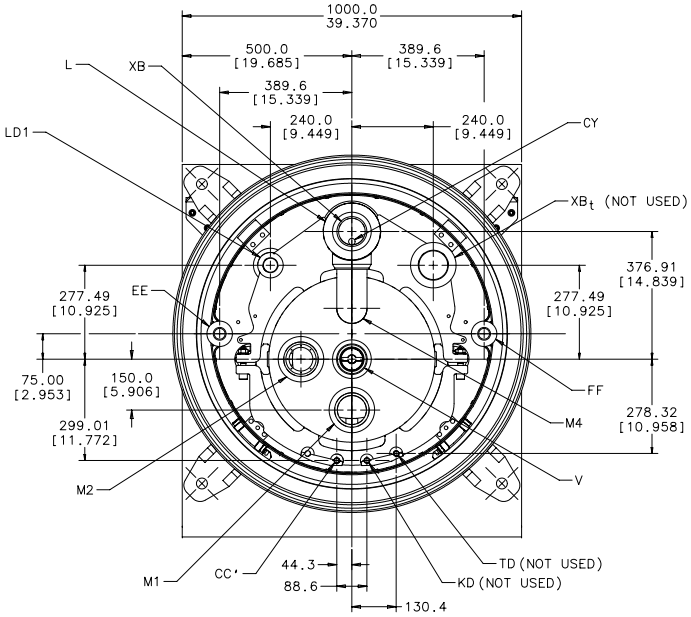

NON-IP Q3 END VIEW
(LOOKING TOWARD IP)
WARM

B–B

NOTE:

ALL DIMENSIONS THAT ARE SLANTED, ie XXX.XX [X.XXX] ARE 50mm RADIAL STAY CLEAR AREAS FOR CERN AUTOMATED WELDING, EXCEPT ON THE MQX1, MQX2, AND V, LINES. THEY HAVE 43mm RADIAL STAY CLEAR AREAS.

SLOPE AT IR2(left) DFBXC +1.39%

SLOPE AT IR8(left) DFBXG +0.36%

ITEM	PART NO.	DESCRIPTION OR SIZE	QTY.

PARTS LIST

UNLESS OTHERWISE SPECIFIED					
.XX	.XXX	ANGLES	ORIGINATOR	P.PFUND	
±.25	±.13	±	DRAWN	K.EWALD	7/30/02
			CHECKED	P.PFUND	10/22/03
			APPROVED	P.PFUND	10/22/03

1. BREAK ALL SHARP EDGES .02 MAX.
2. DO NOT SCALE DRAWING.
3. DIMENSIONS BASED UPON ANSI Y14.5M-1982
4. MAX. ALL MACH. SURFACES ✓

USED ON

MATERIAL

FERMI NATIONAL ACCELERATOR LABORATORY
UNITED STATES DEPARTMENT OF ENERGY

LHC INNER TRIPLET INTERCONNECT
DFBXC-Q3/DFBXG-Q3
GENERAL LAYOUT

SCALE	SHEET	DRAWING NUMBER	REV.
NONE		5520-ME-432009	

CREATED WITH I-DEAS MS1.3b | USER NAME:

INCHES 0 1 2 3 4 5 6
METRIC 0 10 20 30 40 50 60 70 80 90 100 110 120 130 140 150