REV.	DESCRIPTION	DRAWN / APPD.	DATE / DATE
	E.R #7591		
A	ECO #5599	KDE	10/25/03
	48.3 45.0 DIMENSION WAS 44.4 41.9		

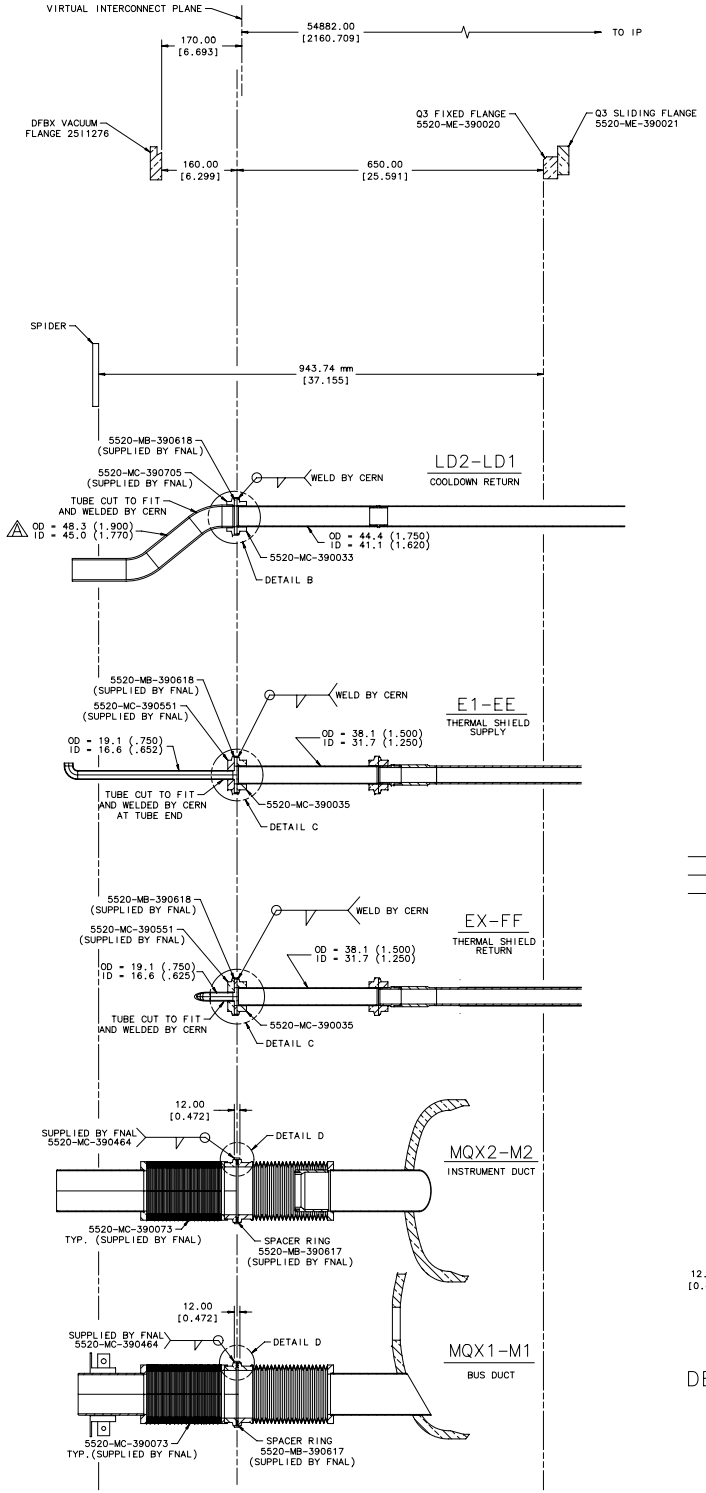

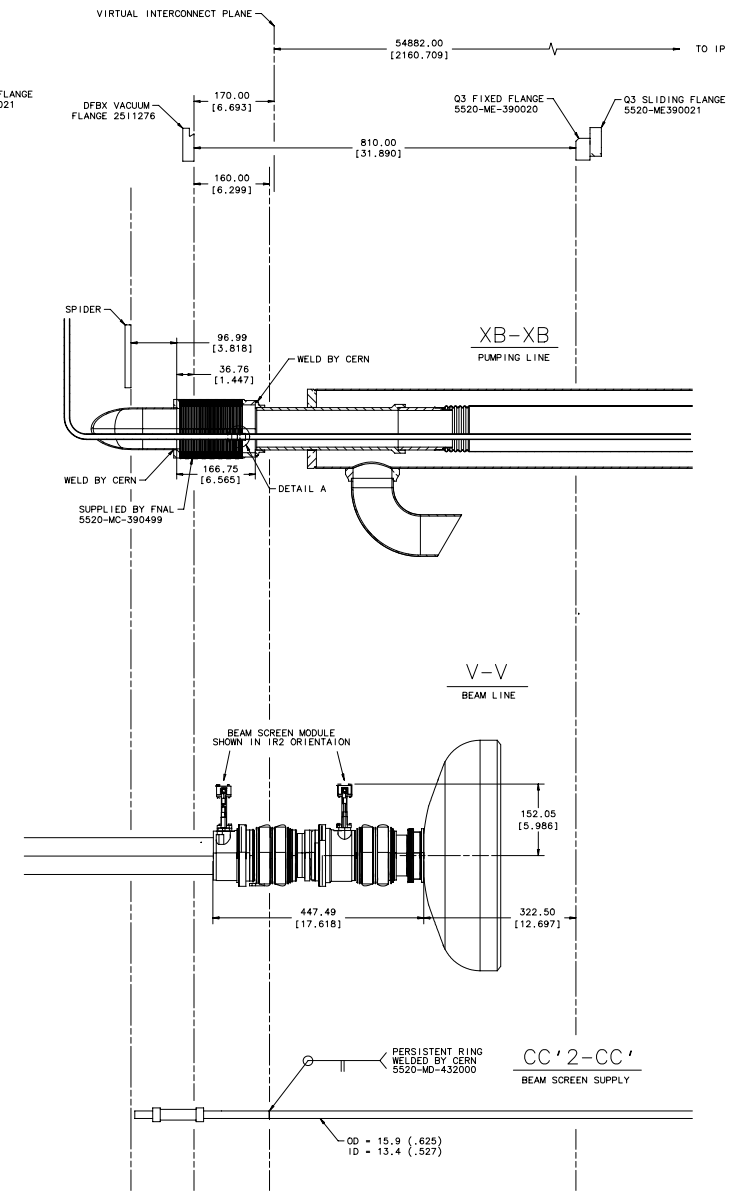

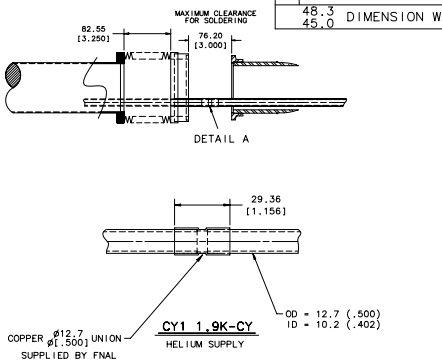

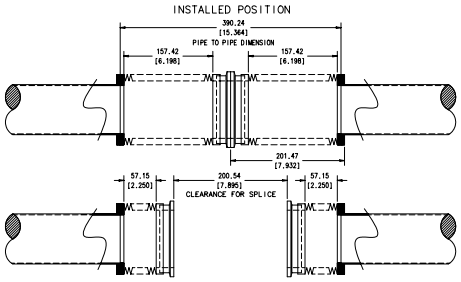

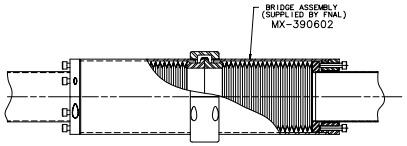

MQX2-M2
INSTRUMENT DUCT

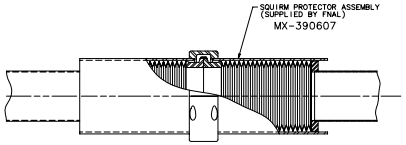

MQX1-M1
BUS DUCT

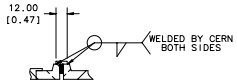

DETAIL D

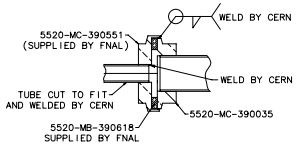

DETAIL C

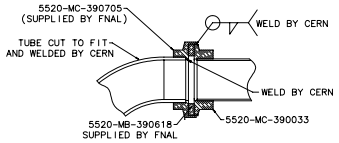

DETAIL B

ITEM	PART NO.	DESCRIPTION OR SIZE	QTY.

PARTS LIST

UNLESS OTHERWISE SPECIFIED			ORIGINATOR	P. PFUND	
.XX	.XXX	ANGLES	DRAWN	K. EWALD	10/1/03
±	±	±	CHECKED	P. PFUND	10/22/03
			APPROVED	P. PFUND	10/22/03

1. BREAK ALL SHARP EDGES .03 MAX.
2. DO NOT SCALE DRAWING.
3. DIMENSIONS BASED UPON ANSI Y14.5M-1982
4. MAX. ALL MACH. SURFACES ✓

USED ON

MATERIAL

FERMI NATIONAL ACCELERATOR LABORATORY
UNITED STATES DEPARTMENT OF ENERGY

LHC INNER TRIPLET INTERCONNECT
DFBXC-Q3/DFBXG-Q3
DETAILED LAYOUT

SCALE	FILMED	DRAWING NUMBER	REV.
NONE		5525-ME-432010	A

CREATED WITH I-DEAS MS1.3b | USER NAME:

INCHES 0 1 2 3 4 5 6
METRIC 0 10 20 30 40 50 60 70 80 90 100 110 120 130 140 150