REV.	DESCRIPTION	DRAWN / APPD.	DATE / DATE
	E.R #xxxx		

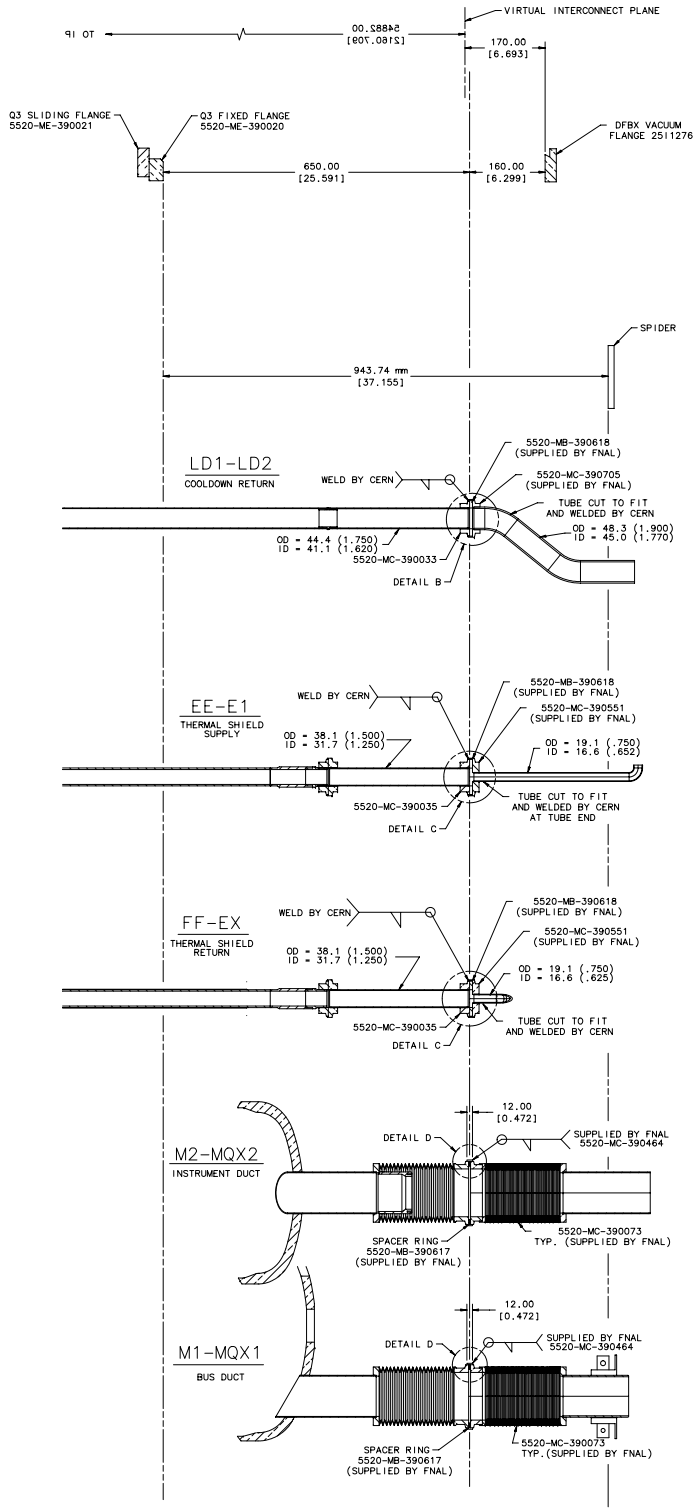

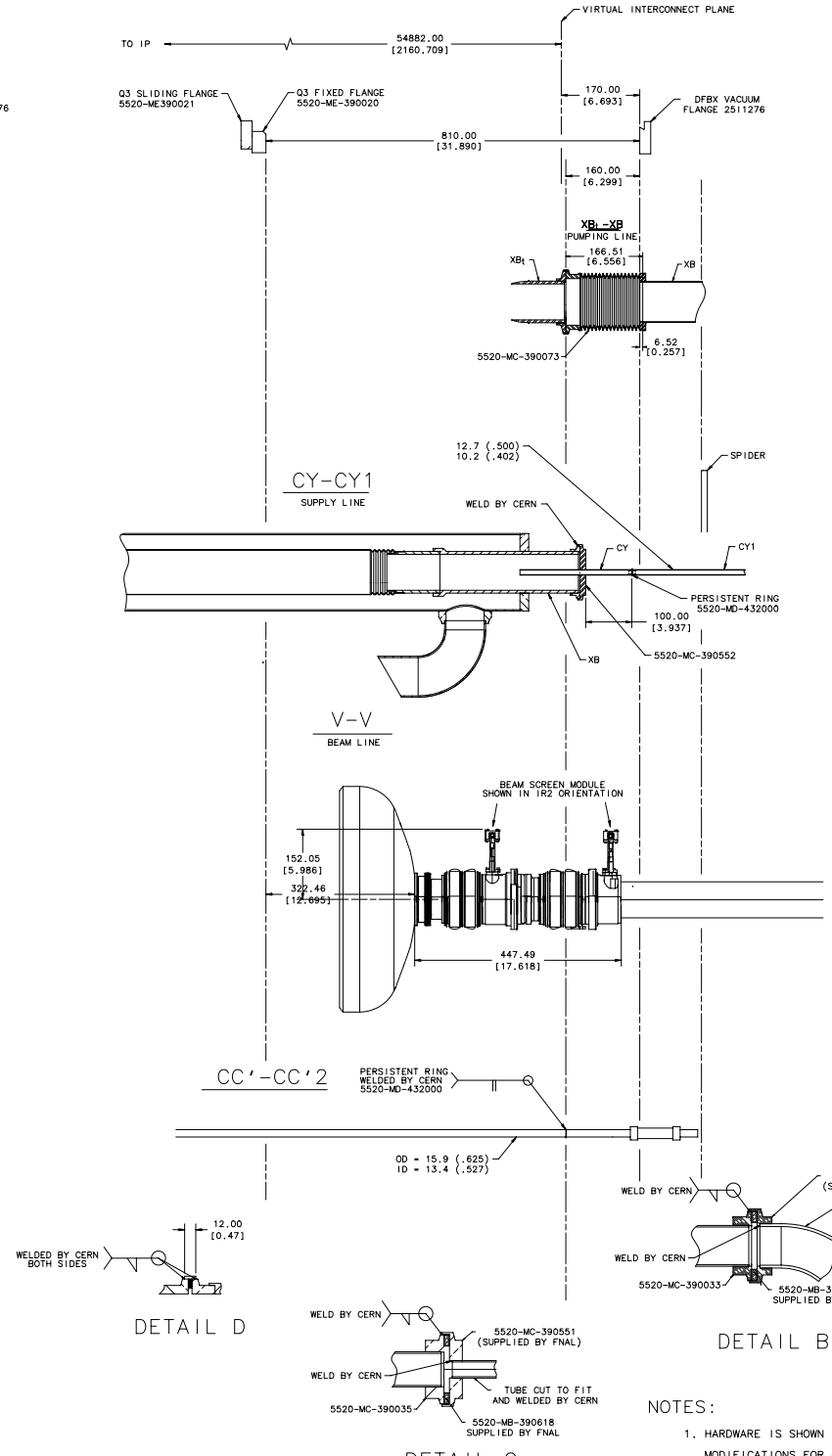

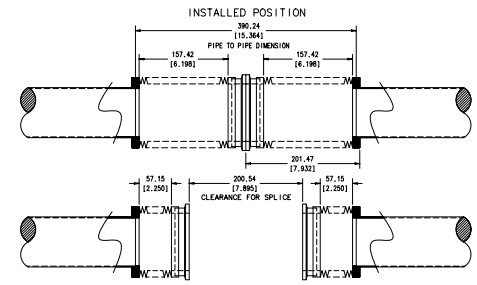

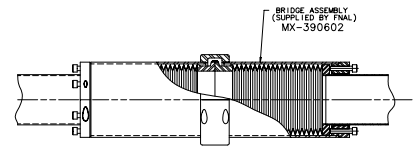

MQX2-M2
INSTRUMENT DUCT

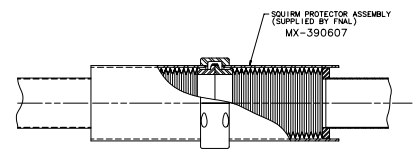

MQX1-M1
BUS DUCT

NOTES:

1. HARDWARE IS SHOWN IN INSTALLED CONFIGURATION

MODIFICATIONS FOR COVERSION FROM SHIPPING CONFIGURATION ARE COVERED IN LBNL PREPARATION AND INSTALLATION PROCEDURE.

ITEM	PART NO.	DESCRIPTION OR SIZE	QTY.

PARTS LIST

UNLESS OTHERWISE SPECIFIED			ORIGINATOR	P. PFUND	
.XX	.XXX	ANGLES	DRAWN	K. EWALD	10/1/03
±	±	±	CHECKED		
1. BREAK ALL SHARP EDGES .03 MAX.			APPROVED		
2. DO NOT SCALE DRAWING.			USED ON		
3. DIMENSIONS BASED UPON ANSI Y14.5M-1982					
4. MAX. ALL MACH. SURFACES			MATERIAL		

FERMI NATIONAL ACCELERATOR LABORATORY
UNITED STATES DEPARTMENT OF ENERGY

LHC INNER TRIPLET INTERCONNECT
DFBXD/DFBXH-Q3
DETAILED LAYOUT

SCALE	FILMED	DRAWING NUMBER	REV.
NONE		5525-ME-432012	

USER NAME: