REV.	DESCRIPTION	DRAWN / APPD.	DATE / DATE
	E.R #XXXX		

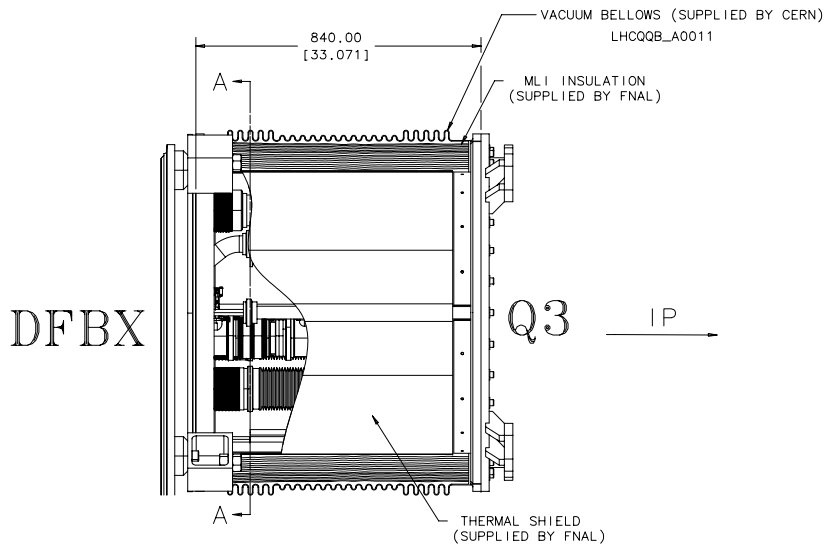

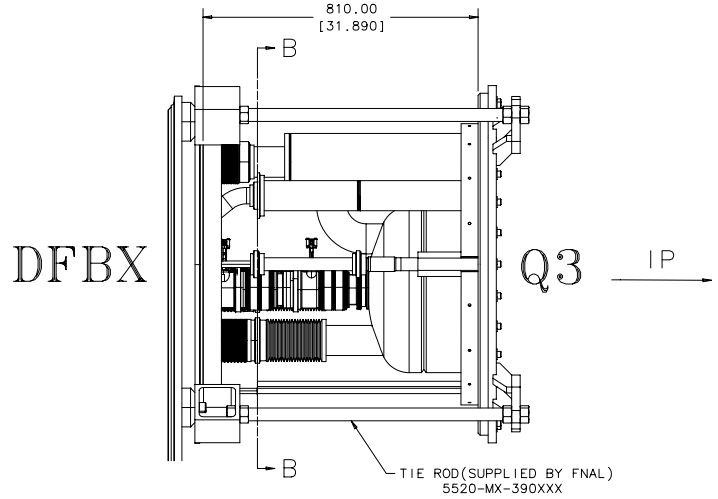

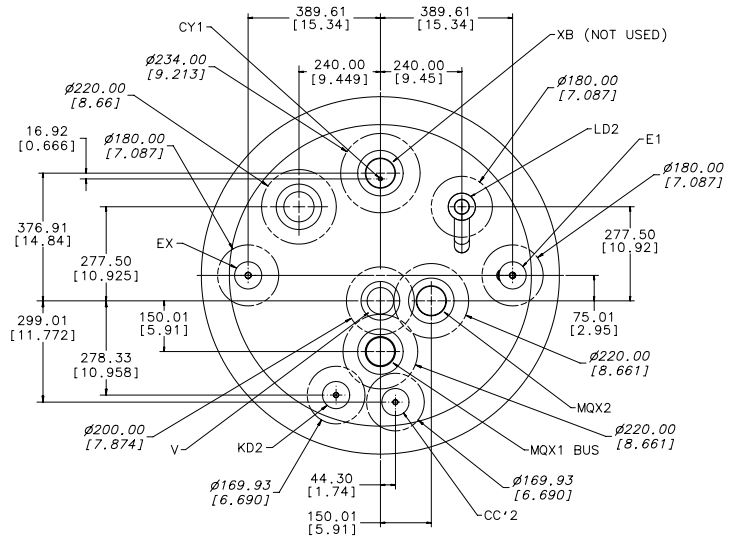

DFBX END VIEW
(LOOKING AWAY FROM IP)

A–A

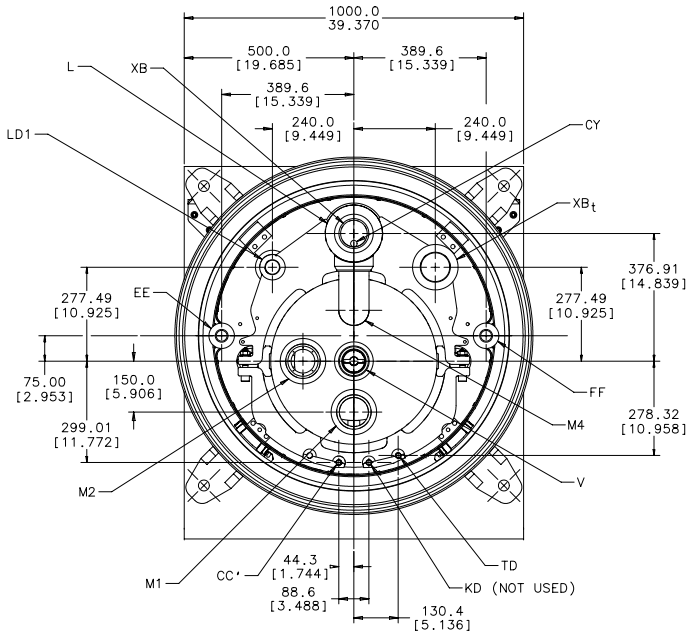

NON-IP Q3 END VIEW
(LOOKING TOWARD IP)
WARM

B–B

SLOPE AT IR5(left) DFBXE -1.24%

NOTE:

ALL DIMENSIONS THAT ARE SLANTED, ie XXX.XX [X.XXX] ARE 50mm RADIAL STAY CLEAR AREAS FOR CERN AUTOMATED WELDING, EXCEPT ON THE MQX1, MQX2, AND V, LINES. THEY HAVE 43mm RADIAL STAY CLEAR AREAS.

ITEM	PART NO.	DESCRIPTION OR SIZE	QTY.

PARTS LIST

UNLESS OTHERWISE SPECIFIED			ORIGINATOR	P. PFUND	
.XX	.XXX	ANGLES	DRAWN	K. EWALD	7/30/02
±.25	±.13	±	CHECKED		
1. BREAK ALL SHARP EDGES .02 MAX.			APPROVED		
2. DO NOT SCALE DRAWING.			USED ON		
3. DIMENSIONS BASED UPON ANSI Y14.5M-1982					
4. MAX. ALL MACH. SURFACES			MATERIAL		

FERMI NATIONAL ACCELERATOR LABORATORY
UNITED STATES DEPARTMENT OF ENERGY

LHC INNER TRIPLET INTERCONNECT
DFBXE-Q3
GENERAL LAYOUT

SCALE	SHEET	DRAWING NUMBER	REV.
NONE		5520-ME-432017	

CREATED WITH I-DEAS MS1.3b | USER NAME:

INCHES 0 1 2 3 4 5 6
METRIC 0 10 20 30 40 50 60 70 80 90 100 110 120 130 140 150