REV.	DESCRIPTION	DRAWN / APPD.	DATE / DATE
	E.R #XXXX		

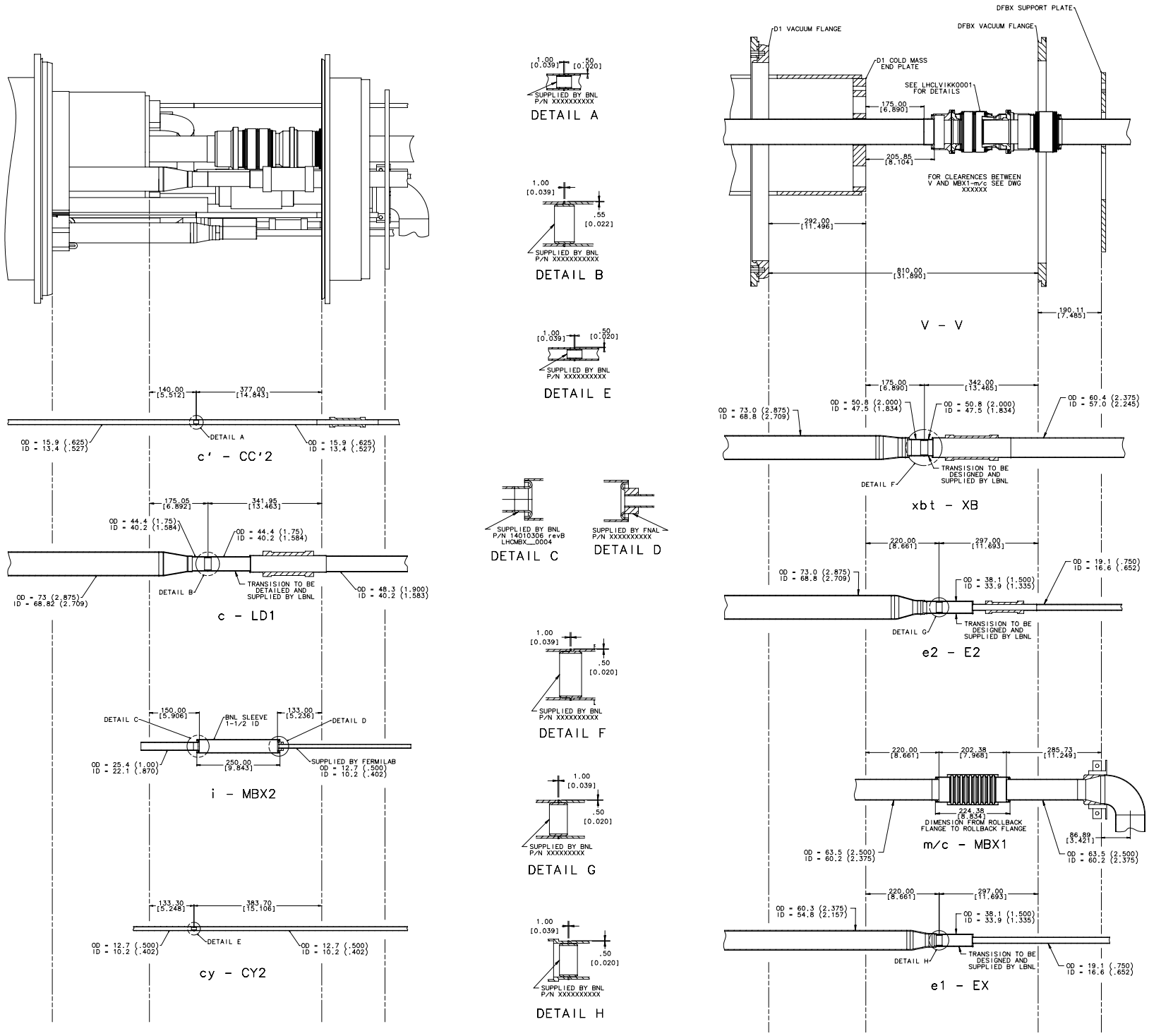

DRAFT
3/24/03

ITEM	PART NO.	DESCRIPTION OR SIZE	QTY.

PARTS LIST

UNLESS OTHERWISE SPECIFIED			ORIGINATOR	P. PFUND	
.XX	.XXX	ANGLES	DRAWN	K. EWALD	3/12/03
±.25MM	±.13MM	±	CHECKED		
1. BREAK ALL SHARP EDGES .02 MAX.			APPROVED		
2. DO NOT SCALE DRAWING.			USED ON		
3. DIMENSIONS BASED UPON ANSI Y14.5M-1982					
4. MAX. ALL MACH. SURFACES			MATERIAL		

FERMI NATIONAL ACCELERATOR LABORATORY
UNITED STATES DEPARTMENT OF ENERGY

LHC INTERCONNECT LAYOUT
DFBXC-D1/DFBXG-D1
INTERCONNECT LAYOUT

SCALE	FILMED	DRAWING NUMBER	REV.
1/4		5520-ME-390XXX	

CREATED WITH I-DEAS MS1.3b | USER NAME:

INCHES 0 1 2 3 4 5 6
METRIC 0 10 20 30 40 50 60 70 80 90 100 110 120 130 140 150