MAG

US – LHC DFXB Safety Note

DFBX Helium Vessel Structural Analysis

Safety Note Serial Number: 02-003

Date: 7/29/02

Prepared by: _____
Steve Virostek, Mechanical Engineer

Reviewed by: _____
Joseph Rasson, Chief Engineer

Approved by: _____
Will Thur, Pressure Vessel Safety Committee

Distribution:

Steve Virostek, Author

Joseph Rasson, Chief Engineer

Will Thur, Pressure Vessel Safety Committee

Matt Kotowski, EH&S Occupational Safety Group

Mechanical Engineering Safety Note File (Print Room)

Officially Released to the LBNL Document Control Center
Released: September 18th, 2002 DCC Auth Key: BWGUYL64EM

Downloaded by: Phil Pfund at December 28, 2004 12:01:56

A. DESCRIPTION

Lawrence Berkeley National Laboratory is responsible for the design, fabrication, and shipment of eight cryogenic feedboxes, designated as DFBX, for the Large Hadron Collider (LHC) at CERN. This work is carried out under the USDOE-LHC Accelerator Collaboration. The DFBX provide cryogenic connections, magnet current, and instrumentation to superconducting inner triplet magnets and in certain cases superconducting separation dipoles to the left and right sides of Interaction Points 1, 2, 5, and 8 in the LHC. This note details the structural analysis of the DFBX helium vessel and its supports. The helium vessel reservoir provides liquid helium cooling for the DFBX current leads and is located inside the DFBX vacuum vessel.

The tank is a welded stainless steel vessel comprised of two curved sides with flat ends and 9 full or partial reinforcing ribs (see Figure 1). It is approximately 52 cm high, 66 cm wide and 145 cm long with an internal volume of 0.37 m^3. The tank is connected to the DFBX vacuum vessel via the bellows and chimneys housing the current leads and is supported from the vacuum vessel top plate by 4 vertical invar struts. The tank has sufficient flexibility to ensure fairly even load sharing among the 4 struts. The tank is constrained longitudinally at the bottom of the vessel by two 48″ long invar threaded rods running in the axial direction. The rods transmit external axial thrust loads to the vacuum box bottom plate while maintaining an appropriate amount of thermal isolation. The overall support configuration constrains the tank under shipping loads but accommodates thermal contraction during cool down. See Figure 2 for a view of the helium tank as it is configured inside the vacuum box assembly.

The vessel will contain saturated liquid helium used to cool a variety of current leads which pass through the tank. The Maximum Operating Pressure (MOP) is 1.3 bar (19 psia) and the Maximum Allowable Working Pressure (MAWP) is 3.5 bar (51 psia). Note that while these are absolute pressures, they also represent the net differential pressure exerted on the tank since the vessel is located within a vacuum box. The 3.5 bar MAWP is controlled by pressure relief valves which prevent the pressure in the vessel from exceeding this level. Details of the pressure relief system and the associated calculations are contained in Engineering Note M8054.

Attached to either end wall of the tank is a housing containing a pressure isolation plug called the lambda plug. The bus duct is a 3″ diameter pipe that connects to the lambda plug housing. As described in Section C2, the bus duct can exert an external thrust load on the tank of up to 6840 lbs. The thrust load is transferred directly to the upper portion of the tank end wall by means of a support bracket. The lambda plug housing is welded to the end wall of the helium vessel using a 1/8″ fillet weld. The weld is supported by a 1″ thick clamping ring that bolts into the end plate with 12 - ½″ diameter bolts.

While the DFBX helium vessel is designed and will be constructed in accordance to the ASME Boiler and Pressure Vessel Code [1], there is one design exception to the code. The vessel side

Officially Released to the LBNL Document Control Center
Released: September 18th, 2002 DCC Auth Key: BWGUYL64EM

Downloaded by: Phil Pfund at December 28, 2004 12:01:56

cover plate is to be welded to a frame on the tank using a single, continuous external fillet weld. This type of weld allows for removal of the cover by grinding the weld away if access to the interior of a tank is ever required. The ASME Code generally does not allow this type of weld configuration due to the bending moments that could be acting on the weld. In order to allow the use of this fillet weld as an exception to the code, a detailed finite element analysis has been carried out to predict the actual stresses in the subject weld. When using a 1/2" fillet weld and a 1" thick cover plate, the predicted stresses in the weld material are well within the limits dictated by the Code. All other weld configurations in the DFBX helium vessel will conform to the Code. Details and results of the tank stress analyses are given in Section C of this note.

The vessel will normally operate at a temperature of 4°K due to the liquid helium contained within it. The material selected for construction of the tank has the appropriate strength and ductility to operate in this type of environment. During operation, the exterior of the vessel will be in a vacuum environment.

There are four different helium vessel configurations to be used in the DFBX. The primary variation is the number of high current lead ports (either 8 or 10). The details of the different vessels are shown in the following helium tank assembly drawings: 25I1116, 25I5736, 25I5746 and 25I5756. The six different configurations of the vessel within the vacuum boxes are shown in the following top-level assembly drawings: 24C2506, 24C3516, 24C3526, 24C3626, 24C3946 and 24C3956.

The completed vessels will not be located at LBNL. They will be installed at CERN Switzerland as a permanent part of the LHC Project. The tanks and associated sub-systems will be operated by a cryogenic engineer.

B. HAZARDS

The vessel will contain 255 liters of saturated liquid helium at 4°K at a pressure of 1.3 bar. The vessel is located within a vacuum box that provides for thermal insulation. Should loss of the insulating vacuum around the vessel occur, the liquid helium will begin to boil off and cause a pressure increase. The pressure in the tank is limited to 3.5 bar absolute by pressure relief valves. The primary hazard is a rupture of the tank under pressure caused by the expansion of the liquid helium.

The formula for the stored energy of a gas filled pressure vessel is given in the LBNL Safety Document, Pub 3000 [2], Appendix E as follows:

$$U = \frac{P_h V_h}{\gamma - 1}\left[1 - \left(\frac{P_l}{P_h}\right)^{\frac{\gamma-1}{\gamma}}\right],$$

Officially Released to the LBNL Document Control Center
Released: September 18th, 2002 DCC Auth Key: BWGUYL64EM

Downloaded by: Phil Pfund at December 28, 2004 12:01:56

where: V_h = vessel internal volume (0.37 m^3)

P_h = the maximum pressure in the vessel (absolute)

P_l = the pressure the vessel would drop to if burst (absolute)

γ = Specific Heat Ratio = $\frac{C_p}{C_v}$ = 1.67 for He; 1.4 for air or N_2

During pressure testing, the vessel internal pressure will be taken up to 4.4 bar gage pressure (64 psig) using dry nitrogen with atmospheric pressure surrounding the tank. Evaluation of the above formula at this pressure yields a stored energy of 191 kJ. During operation, the tank will contain helium at a maximum pressure of 3.5 bar absolute pressure (51 psia) with vacuum surrounding the tank, yielding a stored energy of 194 kJ. If we assume that the helium cannot expand without the vacuum box first coming up to atmospheric pressure, the stored energy is 77 kJ.

While the DFBX helium vessel is designed to satisfy the ASME Pressure Vessel Code, the fact that it is located within the vacuum box adds some measure of protection in the event of a rupture. The vacuum vessel is constructed of 1.25″ thick 304L stainless steel and completely surrounds the helium vessel.

C. CALCULATIONS

C1. Design and Material Specifications

The DFBX helium vessel is designed based on the specifications of the ASME Boiler and Pressure Vessel Code. Material stresses have been calculated and compared to the maximums as set forth in the Code for the given material. Efficiency factors have been applied to all weld stress values as appropriate. An ANSYS [3] finite element analysis (FEA) of the full tank was used to determine the stress levels for various loading conditions. Additional calculations were performed using sub-models of selected portions of the tank as well as hand calculations. Full descriptions of the model and the analyses will be given in Section C3.

The vessel will be fabricated entirely from materials conforming to the following specifications:

304L Stainless Steel

- Plate: per ASTM A-240 hot rolled, annealed and pickled
- Tube: per ASTM A-269

The material supplier will provide certifications to the fabrication vendor for all steel at the time of delivery.

Officially Released to the LBNL Document Control Center
Released: September 18th, 2002 DCC Auth Key: BWGUYL64EM

Downloaded by: Phil Pfund at December 28, 2004 12:01:56

Section II, Part D, Table 1A of the ASME Boiler and Pressure Vessel Code lists the following strength values for the specified vessel materials:

Minimum tensile strength $(S_u)_{min}$ = 70 ksi (483 Mpa)

Minimum yield strength $(S_y)_{min}$ = 25 ksi (172 Mpa)

Allowable material stress $\sigma_{allowable}$ = 16.7 ksi (115 Mpa)

C2. Vessel Load Cases

The Maximum Allowable Working Pressure (MAWP) of 3.5 bar absolute is established based on the pressure relief valve operation as calculated in Engineering Note M8054. The vessel design has been modified to ensure that all stresses fall within the limits set forth by the code at this MAWP as well as at the test pressure of 4.4 bar gage (MAWP + 25%).

A total of 5 different load cases have been analyzed using the previously mentioned FEA model. Loads on the vessel may include various levels of internal pressure, external vacuum, gravity, thermal contraction and thrust loads from external piping attached to the tank. The mean thermal strain for the 304L SS based on the integral of the expansion coefficient over the temperature range of interest is -0.003 in/in [4]. Table I lists the characteristics of the 5 different load cases. In Case 1, the tank is subjected to only the net 4.4 bar test pressure and gravity. Case 2 represents the condition where the helium has expanded to the 3.5 bar PRV pressure with a 6840 lb pipe thrust load, thermal contraction and gravity. The third case represents a vacuum leak check of the vessel. Cases 4 and 5 describe the normal operating conditions of the tank with and without the pipe thrust load.

Case No.	Int. Pressure (abs. bar)	Ext. Pressure (abs. bar)	Gravity (g's)	Thermal Contraction	Ext. Thrust Load (lb)
1	5.4	1.0	1		0
2	3.5	0.0	1	✓	6840
3	0.0	1.0	1		0
4	1.3	0.0	1	✓	6840
5	1.3	0.0	1	✓	0

Table I. DFBX Helium Vessel Load Cases

Officially Released to the LBNL Document Control Center
Released: September 18th, 2002 DCC Auth Key: BWGUYL64EM

Downloaded by: Phil Pfund at December 28, 2004 12:01:56

The first two cases represent the most severe loads on the tank and result in the highest stresses. Most of the results shown here are from one of these load cases. Case 3 was included in order to determine the magnitude of the compressive loads on the vertical support rods. The last two cases do not represent worst-case loads, but were run for the sake of completeness.

C3. Description of Analyses

Due to the fairly complex shape of the DFBX helium vessel, the analysis did not readily lend itself to the use of the standard pressure vessel stress equations. A full finite element analysis of the vessel was developed using ANSYS plate elements as shown in Figure 3. The support points and bellows connections have been modeled using spring elements with the appropriate stiffnesses.

The various load cases were applied to the FEA model separately resulting in von Mises stress plots at all locations in the tank material. Figures 4 and 5 show the stress contours for both a full model view and a section view for loading Case 1. The stress within the shell material is compared directly to the allowable stress in the material as set forth by the ASME Code. Figures 6 and 7 show the same plots for loading Case 2.

Additional steps are required to allow comparison of the tank weld stresses to the Code requirements. As described above, the von Mises stress is observed at the locations of all welds in the tank. However, it is well known that the stress at corner and tee joints is somewhat over-predicted for shell FEA models. The magnitude of the over-prediction for the geometry and material thickness of interest here has been determined by comparing the results of a typical shell joint to the results obtained with the equivalent 3D solid model. It was found that the stress at the corner joint is over-predicted by 27% and at the tee joint by 19%. The stresses at these joints as predicted by the shell model have been adjusted by the appropriate factor to account for the error. Also, a weld efficiency factor has been applied to the allowable stress in the welds as called for by Section VIII, Division I, UW-9 in the ASME Boiler and Pressure Vessel Code.

As described in Section A, the lambda plug housing is welded to the end wall of the helium vessel using a 1/16" fillet weld. Since a bracket removes any external thrust loads and moments on the lambda plug housing, the load on the weld is limited to the internal tank pressure. Hand calculations indicate the stress on this weld is only approximately 2 ksi. While the weld can easily handle this level of stress, the housing clamp ring gives an additional measure of protection to this joint.

As discussed previously, the vessel access cover is attached using a single external fillet weld that is not allowed under the provisions of the ASME Code. This weld configuration allows bending moments to act on the joint that are not readily calculated using traditional methods. In order to establish that the joint is sufficiently strong, a 2D FEA model of the cover plate and the actual

Officially Released to the LBNL Document Control Center
Released: September 18th, 2002 DCC Auth Key: BWGUYL64EM

Downloaded by: Phil Pfund at December 28, 2004 12:01:56

weld has been constructed. After applying the appropriate pressure loading and displacement constraints, the weld stress is determined. As before, an efficiency factor has been applied to the allowable stress in the weld. The access cover frame is connected to the tank wall with a seam weld around the inner edge and a fillet weld around its outer edge. This configuration makes the connection much stronger than that indicated by the shell model. Hand calculations have been used to determine the stress levels in these welds.

The lower tank support ears are represented in the plate model by beam elements. While this allows the stiffness and reaction loads to be accurately modeled, the stress predicted at this location is unrealistically high since the beam elements are attached to the vessel at single nodes. This effect can be seen in Figure 7 by the gray patches in this area indicating stress levels higher than the scale of the contours. A sub-model of the support ears, the weld and a portion of the tank wall has been used to accurately predict these stresses. The reaction loads as obtained from the full model have been applied to the sub-model.

Hand calculations have been used to calculate the stress in various support members such as the lower support invar threaded rods, the lower support mounting brackets, the upper vertical support rods and the upper vertical support rods mounting tabs and their welds. In general, the tank supports were designed to the same standards as the tank itself.

C4. Analysis Results

The results of the DFBX helium vessel stress analyses will be presented in the following three groups: 1) parent material stress as compared to the allowable, 2) weld stresses as compared to the allowable multiplied by an efficiency factor and 3) the support system stresses as compared to allowables. Since the allowable stress has a built in margin, safety factors are not calculated. The ASME Code is satisfied in all cases as long as the predicted stress is lower than or equal to the allowable stress. The parent material stresses will include the following items: primary vessel wall, vessel end walls, vessel spines, vessel ribs, access cover frame, access cover plate and bellows attachment rings. A summary of the results is given in Table II.

Officially Released to the LBNL Document Control Center
Released: September 18th, 2002 DCC Auth Key: BWGUYL64EM

Downloaded by: Phil Pfund at December 28, 2004 12:01:56

Vessel Component	Load Case	Peak Stress (ksi)	Allowable Stress (ksi)	Peak Stress Location
Primary wall	1	8.5	16.7	Vessel top between ports
End walls	1	11.6	16.7	At upper spine connection
Internal Ribs	1	13.0	16.7	Inner edge of full ribs
Internal spines	1	6.5	16.7	Lower spine near center
Access cover frame	1	8.5	16.7	Outer edge at partial rib
Access cover plate	1	7.8	16.7	At lower partial rib
Bellows rings	1	12.5	16.7	Ring OD near tank

Table II. DFBX Helium Vessel Parent Material Stresses

The tank weld stresses will include the following items: end plate-to-shell, spine-to-shell, spine-to-end plate, ribs-to-spine, ribs-to-shell, access cover frame-to-shell, access cover-to-frame and bellows rings-to-shell. Efficiency factors are applied to the allowable stress as specified in the ASME Code. Radiographs will be taken of all accessible weld joints with all others being tested by dye penetrant. A summary of the weld stress analysis is given in Table III.

Vessel Weld Joint Location	Load Case	Peak Stress at Weld Joint (ksi)	Joint Efficiency Factor	Net Allowable Stress (ksi)
Shell-to-shell	1	7.1	0.60	10.0
End wall-to-shell	1	9.6	0.60	10.0
Spine-to-shell	1	8.7	0.55	9.2
Spines-to-end plate	1	8.3	0.55	9.2
Ribs-to-spine	1	7.1	0.55	9.2
Ribs-to-shell	1	7.7	0.55	9.2
Access frame-to-shell	1	1.2	0.55	9.2
Access cover-to-frame	1	8.9	0.55	9.2
Bellows rings-to-shell	1	9.1	0.55	9.2

Table III. DFBX Helium Vessel Weld Stresses

Officially Released to the LBNL Document Control Center
Released: September 18th, 2002 DCC Auth Key: BWGUYL64EM

Downloaded by: Phil Pfund at December 28, 2004 12:01:56

The support systems stresses will include the following items: lower support invar threaded rods, lower support brackets, lower support bolts, lower support ear welds, upper vertical support rod tensile stress and rod end loads, upper vertical support rod mounting tabs and their welds and buckling limits of the upper vertical support rods. A summary of the results is given in Table IV.

Support System Component	Load Case	Peak Stress (ksi)	Weld Joint Efficiency Factor	Net Allowable Stress (ksi)
Invar threaded rod tension	2	7.0	n/a	45
Lower support bracket	2	12.3	n/a	16.7
Lower support bolts	2	4.4	n/a	30
Upper suppt. rod ends	2	4.7 klb	n/a	6.6 klb
Lower support welds	2	5.7	0.55	9.2
Upper suppt. rod tension	1	10.6	n/a	35
Upper suppt. rod buckling[5]	3	1.5	n/a	7.4
Upper suppt. mount tabs	1	15.1	n/a	16.7
Upper suppt. tab welds	1	7.1	0.55	9.2

Table IV. DFBX Helium Vessel Support System Stresses

While the vessel is constructed primarily of 304L SS plate and tube, there are a series of either 8 or 10 bellows (6" diameter, Dwg. G-2454-1 Rev. A) located where the high current lead ports enter the vessels. The manufacturer, Hyspan, lists the pressure rating on the bellows at 70 psig, which is higher than the MAWP and the vessel test pressure.

The DFBX helium vessel is designed to satisfy the ASME Pressure Vessel Code, and shields or barricades are not to be included in the design. However, additional protection is provided by the fact that the vessel is located within the 2.2 m^3 vacuum box constructed of 1.25" thick 304L stainless steel.

D. PRESSURE TESTING

The DFBX helium vessels will be fabricated by an outside vendor who will also be responsible for the pressure tests. The tests can occur only after the fabrication process has reached the point that the access cover is welded to its frame and the vessel is installed on the vacuum box top plate. The following items constitute a partial list of requirements that the fabrication vendor should follow during testing. Any additional measures that enhance the safety of personnel and reduce

Officially Released to the LBNL Document Control Center
Released: September 18th, 2002 DCC Auth Key: BWGUYL64EM

Downloaded by: Phil Pfund at December 28, 2004 12:01:56

the risk of damaging the hardware are strongly encouraged. A step-by-step procedure is not given here since this will be dependent on the facility and equipment available.

- At least one representative of LBNL will witness the pressure tests.
- A close inspection of the test setup and the hardware being tested should be completed by both the LBNL witness and the vendor.
- The vessel is to be incrementally pressurized with dry nitrogen at room temperature up to a maximum pressure of 64 psig (4.4 bar).
- At full pressure, the tank will have a stored energy of 191 kJ which is equivalent to 41 grams of TNT. All personnel must be located at a safe distance behind barricades at all times during pressure testing.
- The tank pressure should be monitored by redundant, calibrated gages.
- At each pressure increment, the gages should be monitored for a minimum of 5 minutes to look for a pressure drop indicating a leak.
- The maximum pressure should be held for a minimum of 10 minutes.
- Photos will be taken by the LBNL witness during all pressure testing.
- Notes will be taken by both the LBNL witness as well as the fabrication vendor during all pressure testing

E. LABELING

A completed LBNL Pressure Tested label similar to that shown below will be obtained for each of the 8 DFBX helium vessels when testing is complete. The labels will be affixed to the tanks and a copy of each will be stored with this Safety Note.

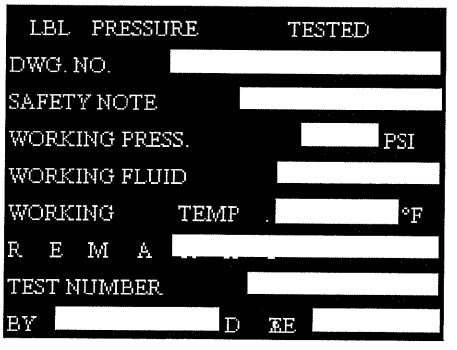

G. REFERENCES

Officially Released to the LBNL Document Control Center
Released: September 18th, 2002 DCC Auth Key: BWGUYL64EM

Downloaded by: Phil Pfund at December 28, 2004 12:01:56

[1] The ASME Boiler and Pressure Vessel Code, Section II (Materials and Their Properties) and Section VIII (Design of Pressure Vessels), 1982.

[2] PUB-3000, Berkeley Lab Health and Safety Manual, Pressure Safety and Cryogenics, 1999.

[3] ANSYS Finite Element Analysis Code, Release 5.7, ANSYS Inc., Canonsburg, PA.

[4] Cryogenic Engineering, Scott, 1963, p. 333.

[5] Mechanical Engineering Design, 4th Edition, Shigley and Mitchell, McGraw-Hill, 1983.

Officially Released to the LBNL Document Control Center
Released: September 18th, 2002 DCC Auth Key: BWGUYL64EM

Downloaded by: Phil Pfund at December 28, 2004 12:01:56

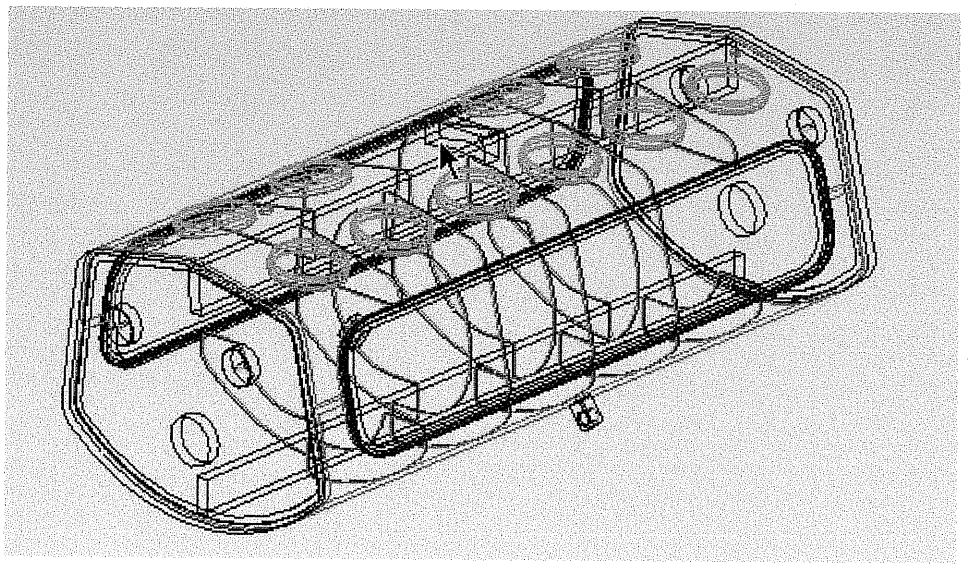

Figure 1. LHC DFBX Helium Vessel Assembly

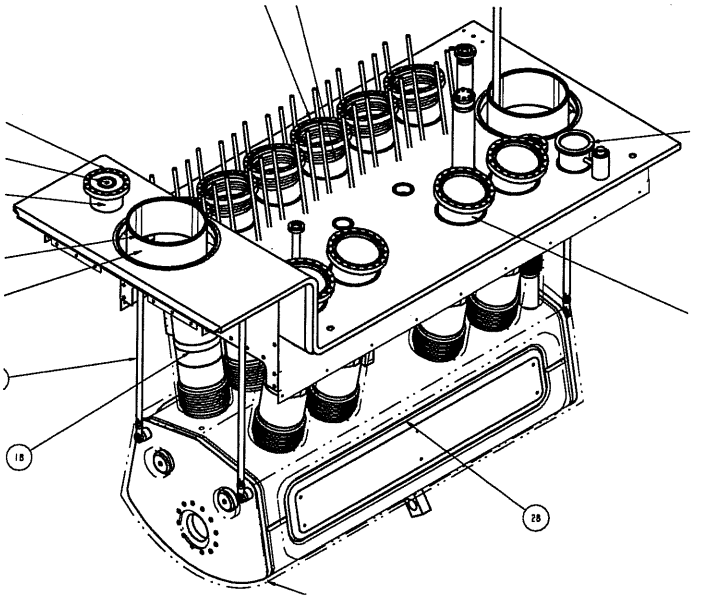

Figure 2. Helium Vessel Configuration in Vacuum Box

Officially Released to the LBNL Document Control Center
Released: September 18th, 2002 DCC Auth Key: BWGUYL64EM

Downloaded by: Phil Pfund at December 28, 2004 12:01:56

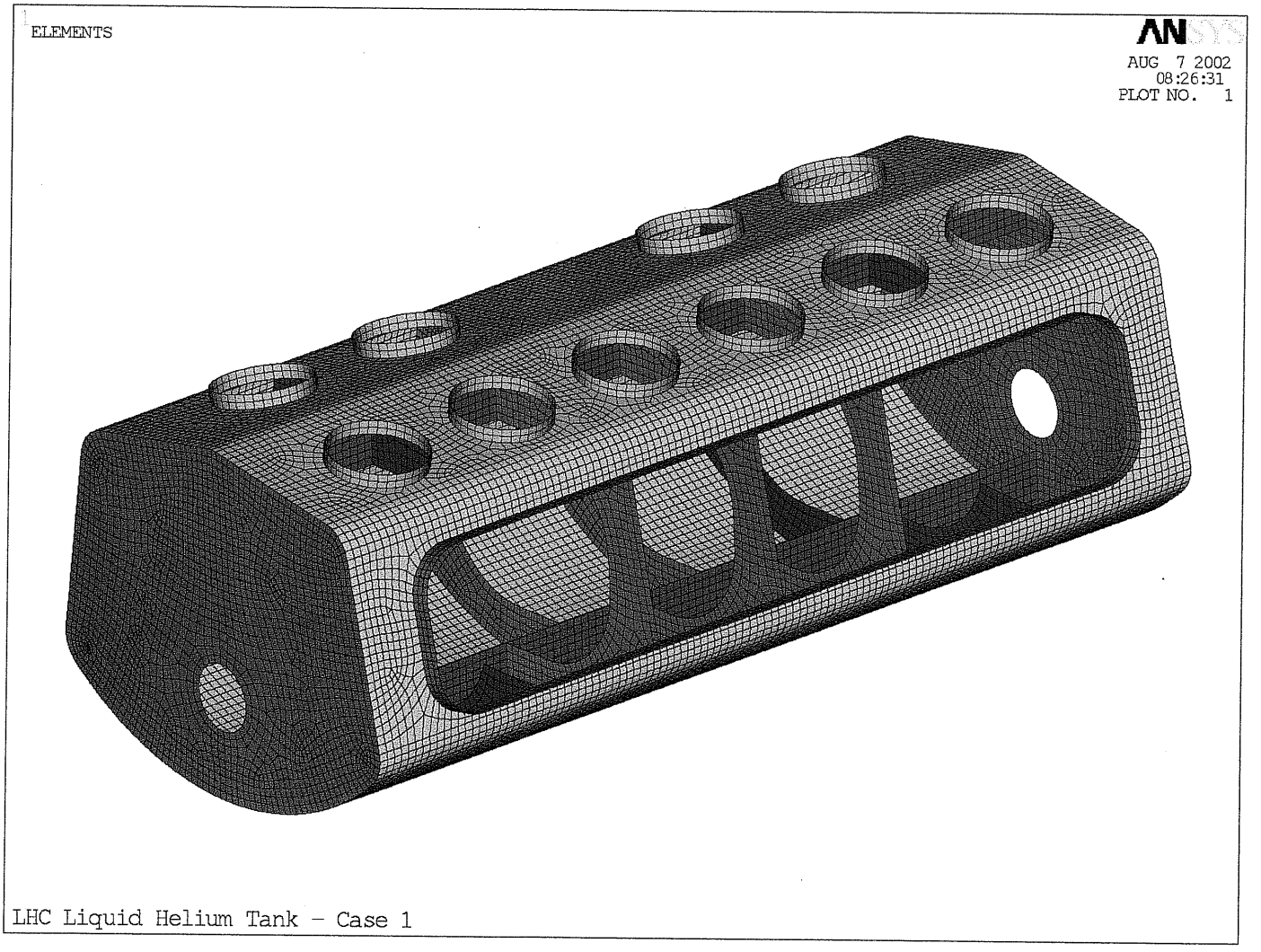

Figure 3. DFBX Helium Vessel Plate Model with Access Door Removed

Officially Released to the LBNL Document Control Center
Released: September 18th, 2002 DCC Auth Key: BWGUYL64EM

Downloaded by: Phil Pfund at December 28, 2004 12:01:56

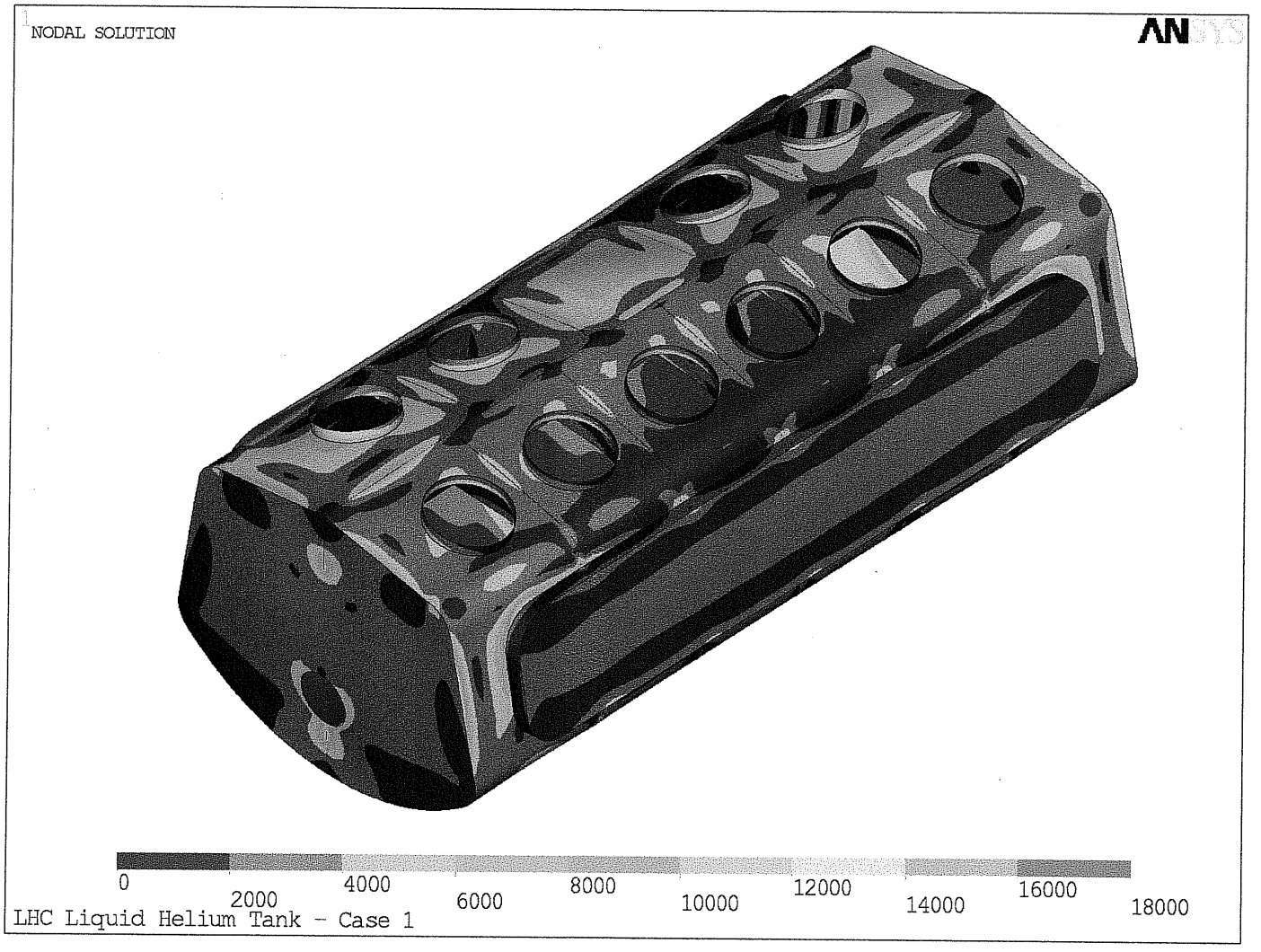

Figure 4. Full Model von Mises Stresses for Loading Case 1

Officially Released to the LBNL Document Control Center
Released: September 18th, 2002 DCC Auth Key: BWGUYL64EM

Downloaded by: Phil Pfund at December 28, 2004 12:01:56

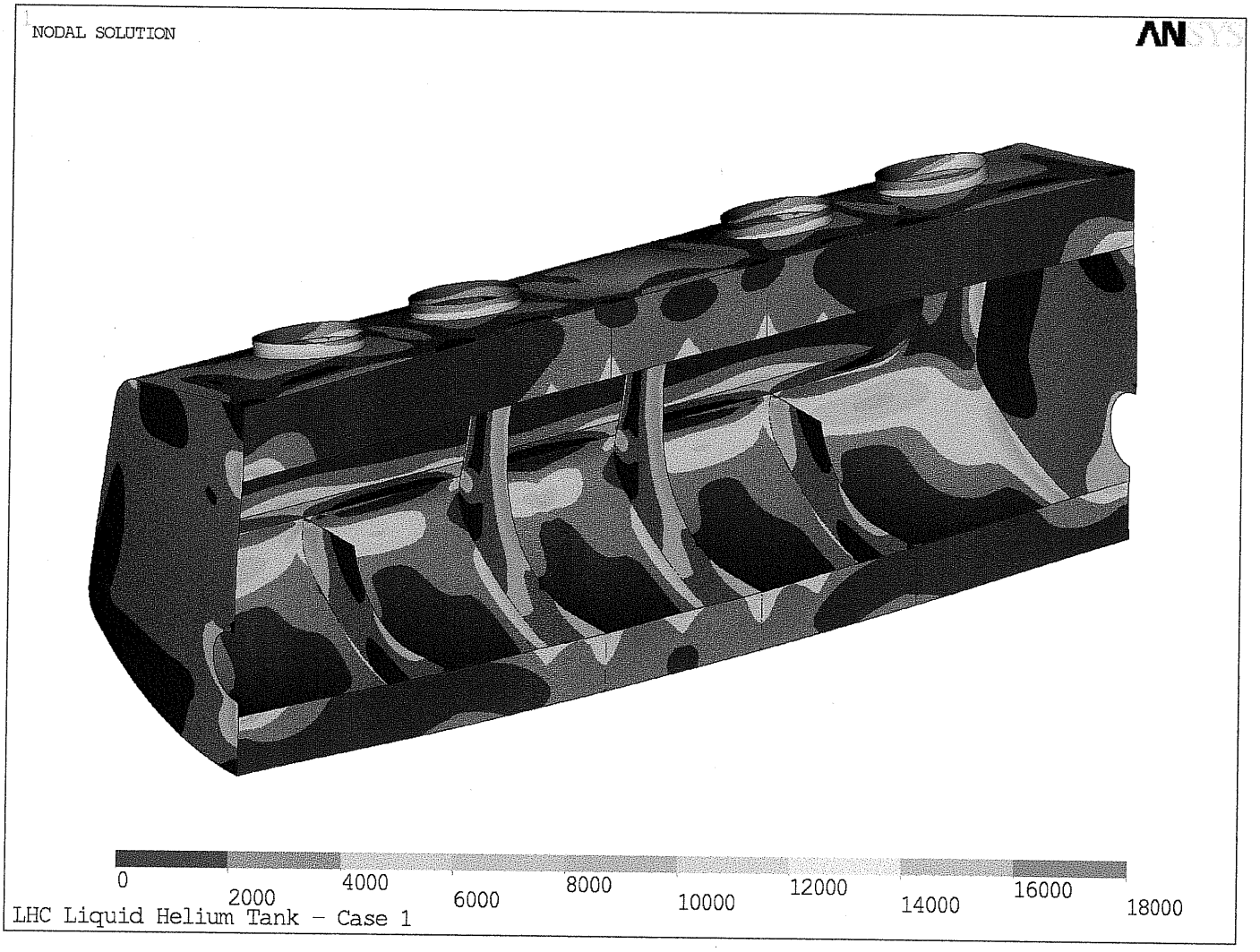

Figure 5. Sectioned Model von Mises Stresses for Loading Case 1

Officially Released to the LBNL Document Control Center
Released: September 18th, 2002 DCC Auth Key: BWGUYL64EM

Downloaded by: Phil Pfund at December 28, 2004 12:01:56

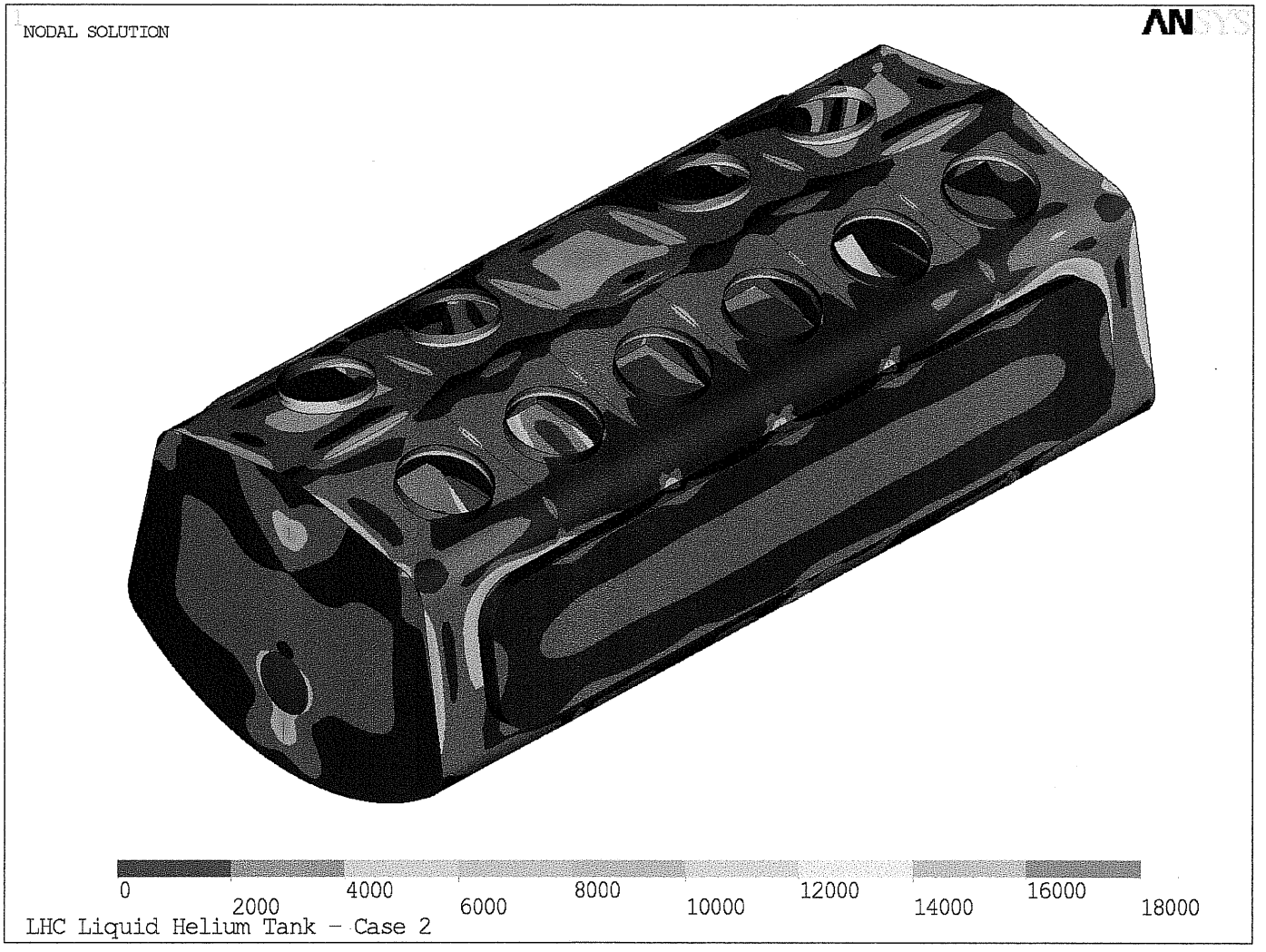

Figure 6. Full Model von Mises Stresses for Loading Case 2

Officially Released to the LBNL Document Control Center
Released: September 18th, 2002 DCC Auth Key: BWGUYL64EM

Downloaded by: Phil Pfund at December 28, 2004 12:01:56

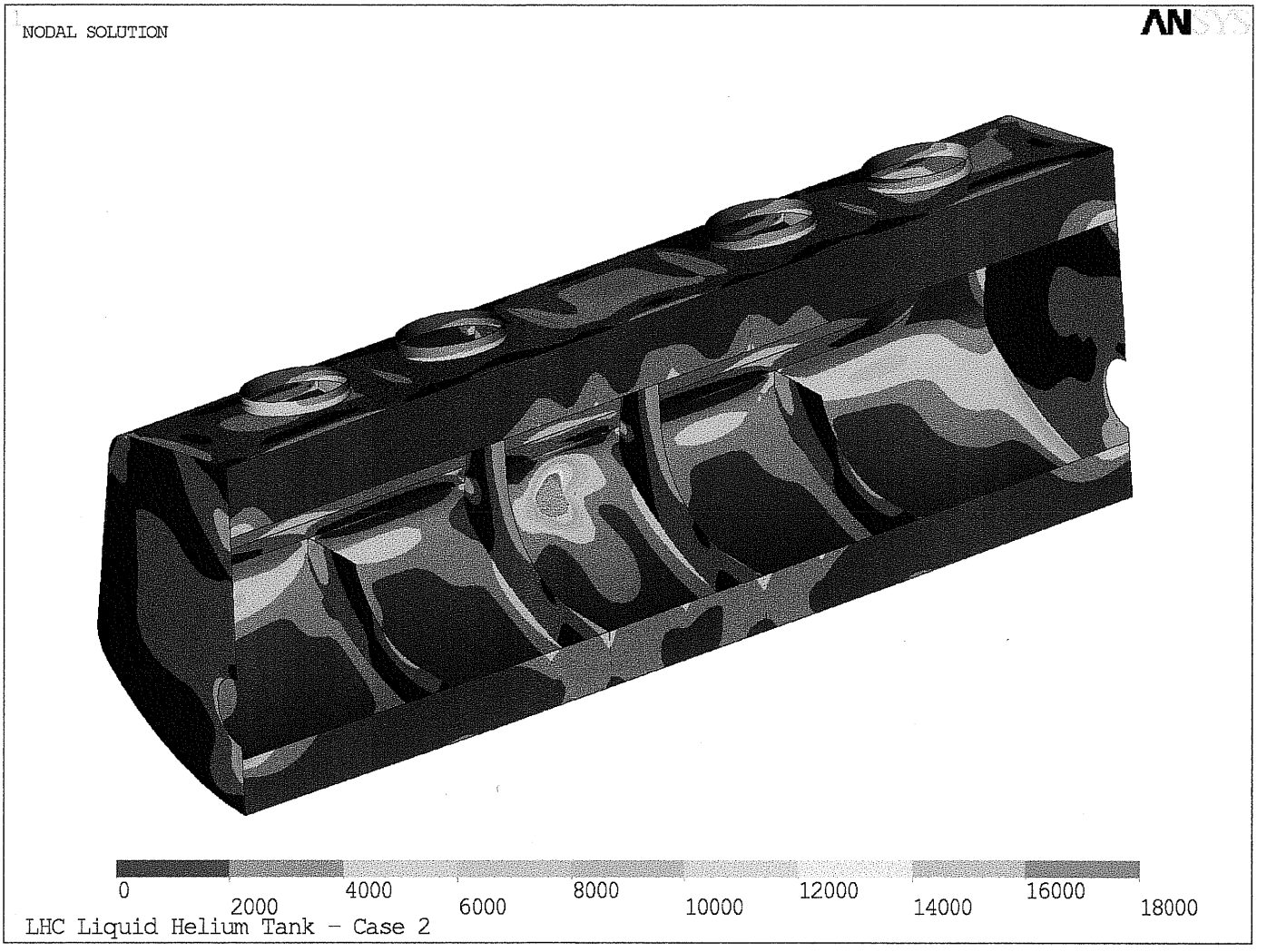

Figure 7. Sectioned Model von Mises Stresses for Loading Case 2

Officially Released to the LBNL Document Control Center
Released: September 18th, 2002 DCC Auth Key: BWGUYL64EM

Downloaded by: Phil Pfund at December 28, 2004 12:01:56