MA6

Program - Project - Job: **US – LHC DFBX**

Title: **Tie Rod Bracket Structural Analysis**

INTRODUCTION

This note analyzes the brackets on the DFBX vacuum box used to secure the tie rods extending from the LQXC cryostat. Since the motorized jacks that support the LQXC cryostat are unable to sustain the vacuum thrust load from the LQXC, the tie rods transfer this load to the DFBX which is equipped with bumper brackets to constrain lateral loads on the DFBX. Tensile loads from a catastrophic overpressure condition are also considered.

DISCUSSION

Bracket

There are four tie rod brackets (LBNL part no. 25I180) located outboard of the large-flange end of the DFBX and attached to the lifting bosses. (See Figure 1.) A sketch of the bracket analyzed here is shown in Figure 2. The brackets are made of 304 stainless.

The finite element model was created in ProMechanica 2000i[2] and is shown in Figure 3. Material properties and model assumptions are listed in Table I. The main loading case is the vacuum thrust load from the LQXC. The tensile load due to a 10 psi overpressure condition in the LQXC is also calculated. In both cases, the loads are proportional to the flange cross-section between the DFBX and the LQXC.

Thrust load = (Flange area) x (atmospheric pressure)
$= (36^2)(\pi)/4 \text{ in}^2 \times (14.7 \text{ psi})$
$\approx 15{,}000$ lbs.
Conservatively assume load shared over three of the four brackets,
Load $= 15000/3 = 5000$ lbs.

Using the same equation for the tensile load with 10 psi overpressure yields

Tensile load $= (36^2)(\pi)/4 \text{ in}^2 \times (10 \text{ psi})$
$\approx 10{,}000$ lbs.
Load $= 10000/3 = 3333$ lbs.

Since the tensile load is significantly lower than the vacuum load case, the latter will be used for the analysis. These loads assume that the tie rod is perpendicular to the face of the flange, delivering all of the load directly into the bracket. In service, the tie rods are angled slightly, as they are mounted on ears extending radially out from the exit flange on a larger radius than that of the DFBX flange. This geometry results in small side loads to the bracket. Also of concern is possible misalignment of the rods which may

Officially Released to the LBNL Document Control Center
Released: October 9th, 2001 DCC Auth Key: O6QXSLD3LQ

Downloaded by: Phil Pfund at January 03, 2005 06:34:00

increase the side load, altering the distribution of the loads. The offset angle of the rod is 9°. Allowing a 10% factor for misalignment gives a total offset angle of 10°. Since the DFBX brackets are angled at 45°, this load can be resolved into a radial load, Fr, and direct load, Fd, of

$$Fr = Sin(10)(5000) = 868 \text{ lbs.}$$
$$Fd = Cos(10)(5000) = 4924 \text{ lbs.}$$

These loads were applied at a point, at the center of the tie rod bracket mounting hole. See Figure 4.

Bolt Loads

Loads on the bolt connecting the tie rod bracket to the boss on the DFBX also need to be checked. An M30 rod from the quadrupole will be fastened to each tie rod bracket with a spherical washer and a double-nut. The bracket will be secured to the DFBX by an M20 bolt. Since this bolt represents the worst case condition, its loading is verified below. Since data on english bolt sizes is more readily available, the conservative case for a ¾" diameter bolt will be checked. (An M20 has a 0.787-inch diameter.)

RESULTS

Bracket

Figure 5 shows the von Mises stress distribution resulting from the vacuum thrust load case. The peak stress is 24.8 ksi. This maximum occurs in a very small area near the bracket constraint. Using the yield stress of 304 Stainless, this yields a factor of safety of about 1.6. Most of the bracket is in a lower state of stress, under 10 ksi, with a safety factor of 3.9 or better.

The direct load (without the side loads) was run for the tensile load case (over pressure condition). The stress distribution is similar to that of the compressive load (vacuum load condition), with a maximum stress of 16.6 ksi and average stresses under 5 ksi.

Bolt Calculations

Using the data for a ¾" bolt, for direct loading,

$Sp/n = Fmax/A$, where
- Sp = bolt proof load
- n = Factor of safety
- Fmax = maximum direct load
- A = area required, in^2

Assume, conservatively, that the bolt carries all of the direct load, and require a safety factor of 1.5, Then, A = (1.5)(5000)/Sp. For a grade 2 bolt[1], Sp = 52000 psi, for a grade 5 bolt, Sp = 78000 psi. So, A = 0.144 in^2 which implies a diameter of at least 9/16" for a grade 2 bolt, and A = 0.096 in^2 which implies a diameter of at least 7/16" for a grade 5 bolt. These results indicate that the factor of safety is greater than 1.5 for a ¾" bolt. The tensile area for a ¾" bolt is 0.334 in^2. Calculating the safety factors for grade 2 and grade 5, ¾" bolts, respectively, yields, 3.5 and 5.2. Checking the shear load on the bolt,

[1] Bolt data taken from Shigley, J.E., Mechanical Engineering Design, McGraw-Hill, 1963, pp.234, 247.

Officially Released to the LBNL Document Control Center
Released: October 9th, 2001 DCC Auth Key: O6QXSLD3LQ

Downloaded by: Phil Pfund at January 03, 2005 06:34:00

$\tau = 4V/3A$ where, τ = shear stress, psi
V = shear load, lbs.
A = cross-sectional area of bolt, in^2

$\tau = 4(868)/3(0.44) = 2620$ psi

CONCLUSIONS

The general stress state under vacuum loading is acceptable for the bracket. The maximum stress is confined to a small area near the mounting face and is within acceptable limits. Reversing the load for the overpressure condition yielded a similar stress distribution and generally lower stresses.

From the bolt calculations, it is clear that there is sufficient safety margin in the direct load on the M20 bolt. If we take the bolt shear strength to be 0.577 times its ultimate strength, then, for a grade 2 bolt with ¾" diameter, the factor of safety in shear is, F. S. = 0.577(64000)/2620 = 14. Although the bolt safety factors may seem large, the tie rods represent a potential safety issue should the connection fail under load. Since bolt load carrying capability relies on many factors, and the side loading could vary slightly with the alignment of the DFBX relative to the LQXC, it is important to provide a generous margin in the bolt design. Therefore a high-strength M20 bolt with a metric grade of 12.9 is recommended.

Officially Released to the LBNL Document Control Center
Released: October 9th, 2001 DCC Auth Key: O6QXSLD3LQ

Downloaded by: Phil Pfund at January 03, 2005 06:34:00

TABLES AND FIGURES

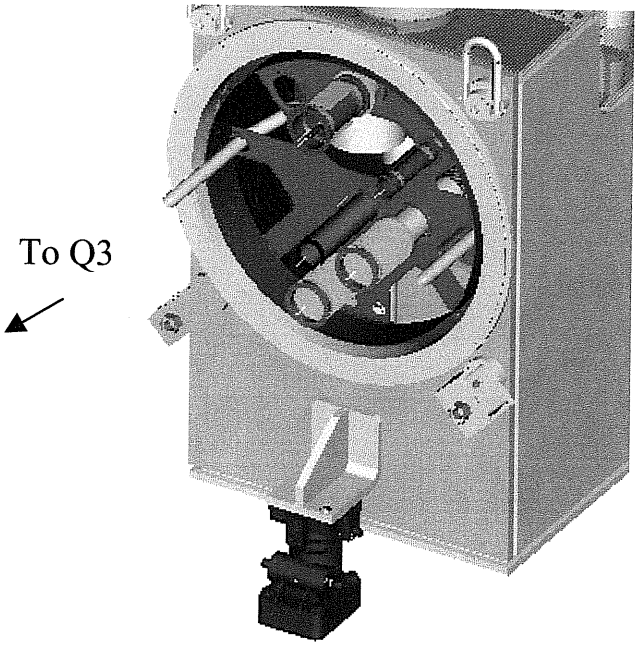

Figure 1. Tie rod bracket locations on DFBX vacuum vessel.

Officially Released to the LBNL Document Control Center
Released: October 9th, 2001 DCC Auth Key: O6QXSLD3LQ

Downloaded by: Phil Pfund at January 03, 2005 06:34:00

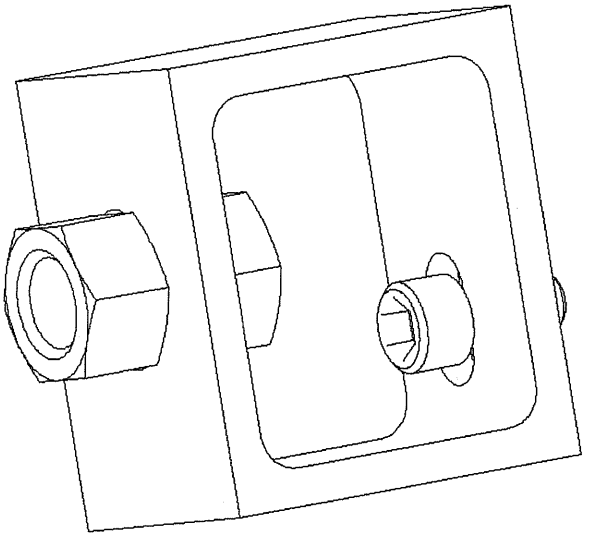

Figure 2. Sketch of tie rod bracket.

Officially Released to the LBNL Document Control Center
Released: October 9th, 2001 DCC Auth Key: O6QXSLD3LQ

Downloaded by: Phil Pfund at January 03, 2005 06:34:00

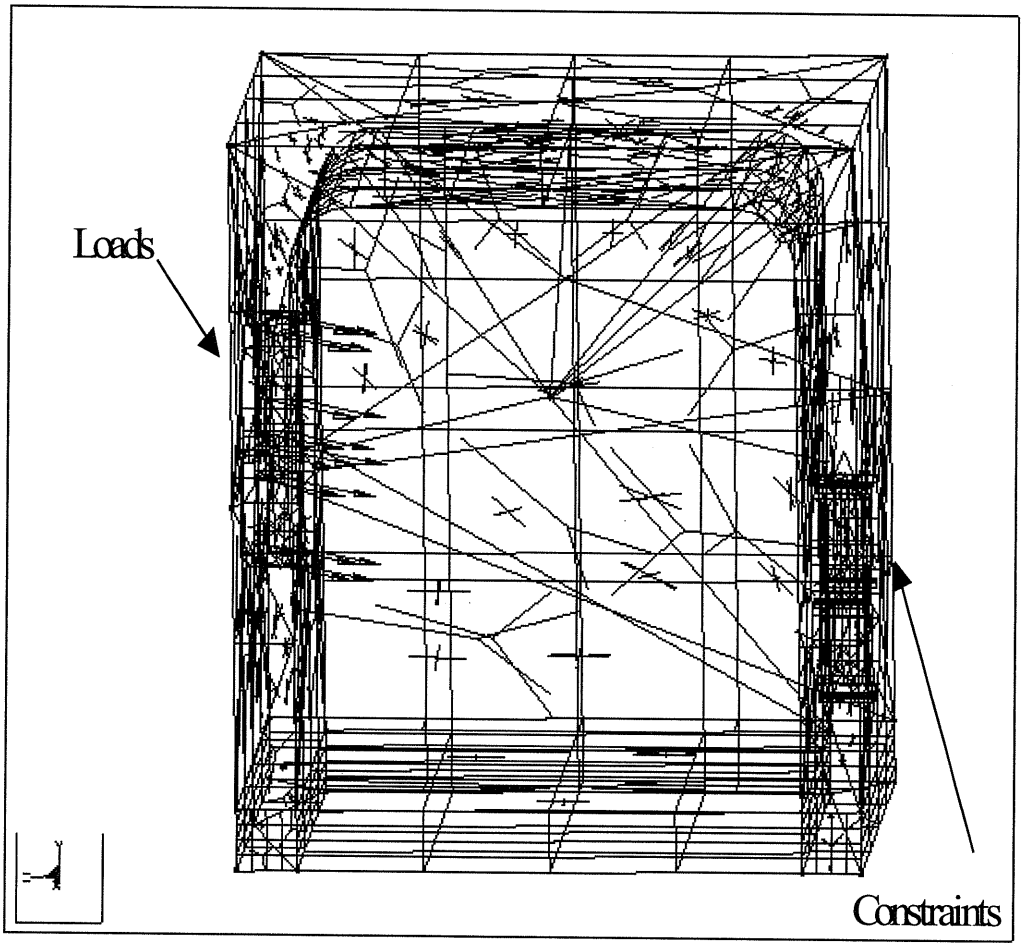

Figure 3. FEA model with loads and constraints.

Officially Released to the LBNL Document Control Center
Released: October 9th, 2001 DCC Auth Key: O6QXSLD3LQ

Downloaded by: Phil Pfund at January 03, 2005 06:34:00

TABLE I.

Material Properties 304 Stainless Steel[2]

Density: 0.28 lb/in^3

Modulus of Elasticity: 28e6 psi

Poisson's ration: 0.3

Yield Strength: 39 ksi

Model Assumptions

Loads
Vacuum thrust load: 5000 lbs. applied to the tie rod bracket at the rod at the attach point.
Overpressure load: 3333 lbs. applied to the tie rod bracket at the rod attach point.

Constraints
The side surfaces of the slot used to mount the tie rod bracket to the DFBX on the lifting bosses are constrained in all three translation directions.

[2] Avallone, E.A., and Baumeister, T., Marks' Standard Handbook for Mechanical Engineers, Ninth Ed., McGraw-Hill, 1987.

Officially Released to the LBNL Document Control Center
Released: October 9th, 2001 DCC Auth Key: O6QXSLD3LQ

Downloaded by: Phil Pfund at January 03, 2005 06:34:00

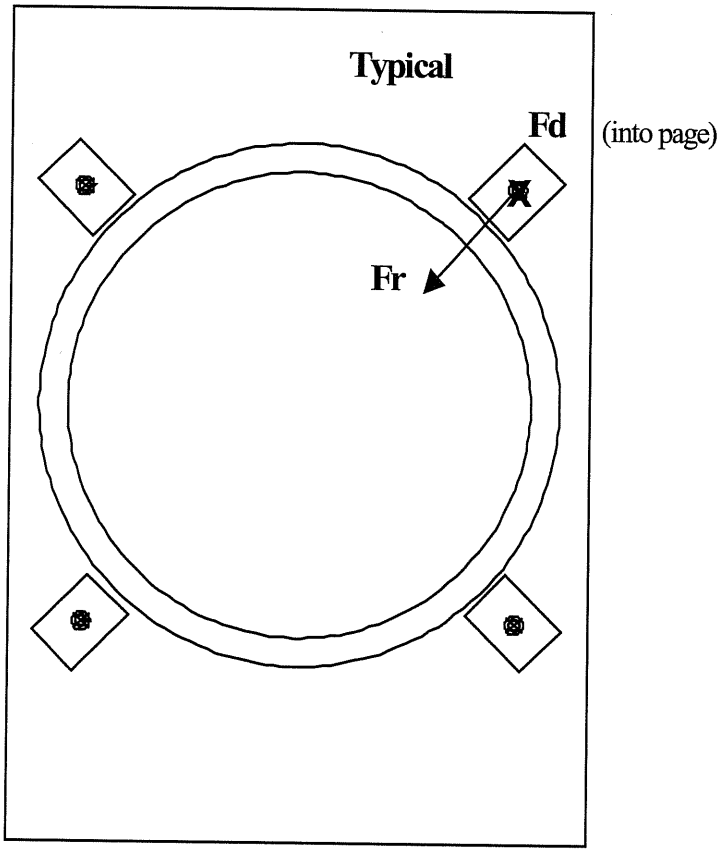

Figure 4. Sketch showing orientation of radial and direct loads on tie rod brackets.

Officially Released to the LBNL Document Control Center
Released: October 9th, 2001 DCC Auth Key: O6QXSLD3LQ

Downloaded by: Phil Pfund at January 03, 2005 06:34:00

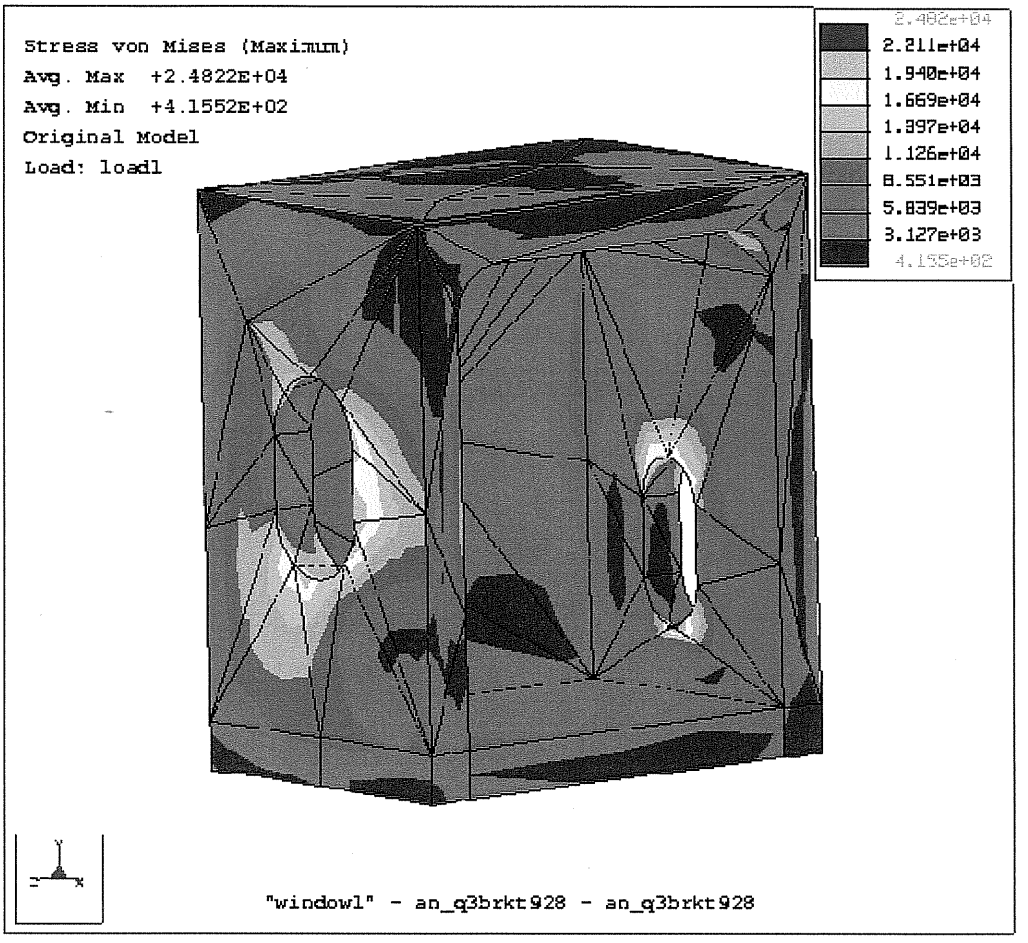

Figure 5. Stress distribution in bracket under vacuum thrust load.

Officially Released to the LBNL Document Control Center
Released: October 9th, 2001 DCC Auth Key: O6QXSLD3LQ

Downloaded by: Phil Pfund at January 03, 2005 06:34:00