US-LHC DFBX Safety Note

Pressure and Leak Testing of MBX1 and MQX1 Bus Ducts

Safety Note serial Number 03-002

Date: 11 September, 2003

Prepared by: _____
Jon Zbasnik, Mechanical Engineer

Reviewed by: _____
Joseph Rasson, DFBX Manager

Approved by: _____
William Thur, Pressure Safety Committee

Distribution:

J. Zbasnik
W. Gath
J. Rasson
W. Thur
M. Katowski, EH&S Representative
M. Bona, CERN TIS
Mechanical Engineering Safety Note File

I. Description

The MBX1 and MQX1 Bus Ducts are pressure-bearing electrical feedthroughs fabricated at LBNL that will be incorporated into the LHC Inner Triplet Feedboxes (DFBX) by our DFBX Fabrication Subcontractor, Meyer Tool and Mfg. These components contain superconducting busses that allow the superconducting inner triplet magnets and corrector magnets to be supplied via current leads in the DFBX.

A barrier in the Bus Ducts, called a lambda plug, separates the 1.8K, 1 bar superfluid helium magnet bath and the 4.3K, 1.3 bar liquid helium bath in the DFBX. Refer to LBNL Engineering Note M8162 for a report on the Lambda Plug R&D. [1]

The MBX1 Assembly is shown on LBNL Drawing 25M859 [2] and the MQX1 Assembly is shown on LBNL Drawing 25M857 [3].

Isometric views of MBX1 and MQX1 are shown in Figures 1 and 2, respectively.

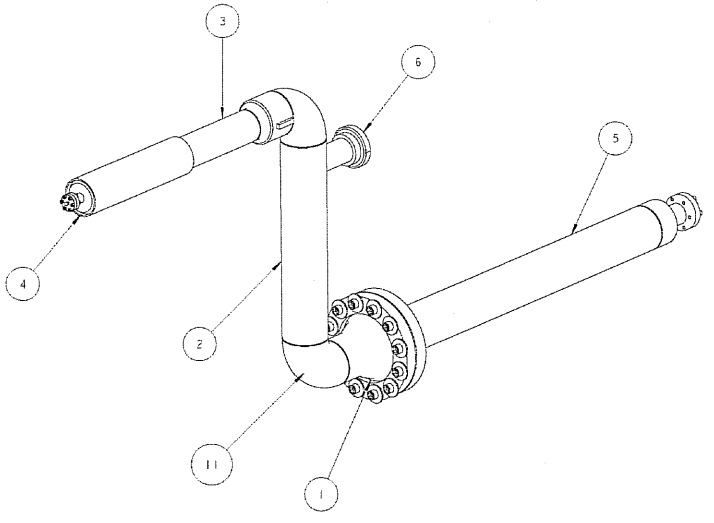

Figure 1. Isometric view of MBX1. 1-Housing with Lambda Plug; 2-Vertical Pipe Section; 3-Horizontal Section (this connects to magnet); 4-test Cap (this is removed for tunnel installation); 5-Conductor Protection Tube (this is removed for attachment to DFBX); 6-Helicoflex Sealing system; 11-Short Radius 3 IPS Weld Elbow.

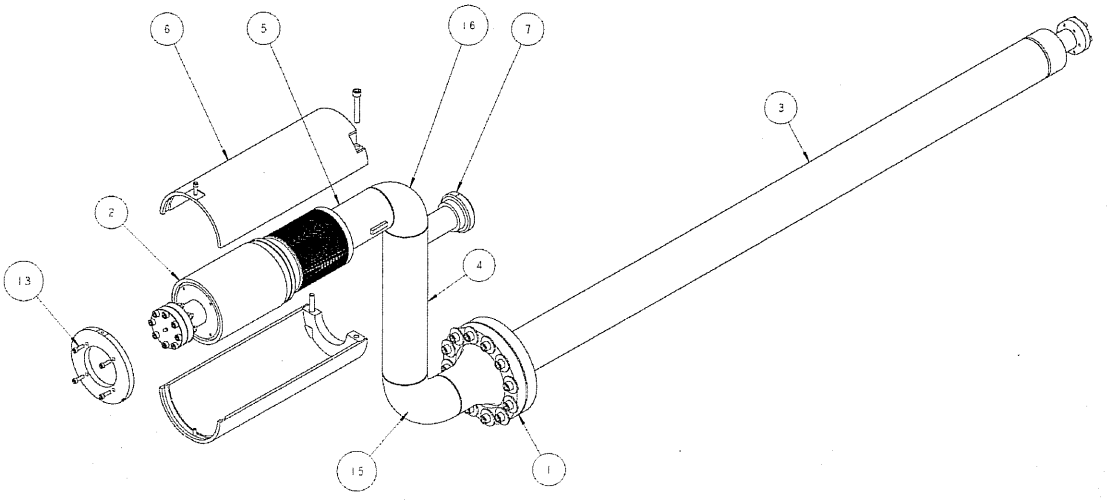

Figure 2. Isometric View of MQX1. 1 - Housing with Lambda Plug; 2 - Test Cap (this is removed for tunnel installation); 3 - Conductor Protection Tube (this is removed for attachment to DFBX); 4 - Vertical Pipe Section; 5 - Horizontal Section (this connects to magnet); 6 & 13 - Bellows Restraint (this is removed for tunnel installation); 7 - Helicoflex Sealing System; 15 - Long Radius 3 IPS Weld Elbow; 16 - Short Radius 3 IPS Weld Elbow.

The bus duct design pressure (Maximum Allowable Working Pressure, or MAWP) is 20 bar applied to the magnet side and 3.5 bar applied to the DFBX side. The duct would probably be damaged with hydrostatic testing using water since the electrical insulation would be compromised, so it will be tested pneumatically with dry nitrogen or helium. In accordance with Pub 3000, the magnet-side piping will be pressure tested to 25 bar (370 psig), which is 125% of the MAWP.

The magnet-side piping is 3 IPS (3.5 inch outer diameter) schedule 10, type 304L stainless steel pipe and weld elbows. The Lambda Plug housing is machined from a forged 304L stainless steel special weldneck flange. Welding was performed by LBNL welders using the GTAW process with ER316L filler wire. The assembly of NEMA G-10CR and conductors potted into the housing using Stycast 2850 MT (blue) epoxy completes the pressure boundary of the magnet-side piping.

Each Bus Duct has a short section of 1.5 IPS (1.90 inch outer diameter) stainless pipe, schedule 10, type 304L welded to the 3 IPS length and capped with a Helicoflex sealing system (Item 6, Figure 1 and Item 7, Figure 2). The sealing system consists of a conical flange supplied by Fermilab (P/N 390033B) that is welded to the 1.5 IPS pipe. Refer to LBNL Drawings 25M911 [4] for the MBX1 and 25M908 [5] for the MQX1 where .125 inch fillet welds are required for attachment. A blank flange (Helicoflex P/N

T300KF75) is clamped in place with an all stainless steel Helicoflex Chain Clamp (P/N 300A75) and sealed with an aluminum seal (Helicoflex P/N HL290P). The manufacturer rates the clamp with a 20 bar pressure rating.

The MBX1 is closed with a test cap that is detailed on LBNL Drawing 25M913 [6]. The closeout weld is an edge weld as shown on Drawing 25M859 [2]. For installation at CERN in the LHC tunnel, our edge weld will be removed, the test cap discarded and an interconnection bellows supplied by Brookhaven National Laboratory will be edge welded by CERN [7].

The MQX1 is fitted with a welded metal bellows assembly supplied by Fermilab (P/N 390073) and attached as shown on LBNL Drawing 25M907 [8]. The attachment welds are made with ER316L filler wire. The bellows is specified for use in the LHC application and will be joined to an identical bellows assembly on the quadrupole magnets from fermilab by CERN in the LHC tunnel. For testing at LBNL, the bellows assembly is fitted with a test cap shown on Drawing 25M950[9]. To prevent bellows motion during pressure testing, a squirm protection assembly, shown on Drawing 25M957 [10] is attached as shown on Drawing 25M857 [3]. For installation in the LHC, CERN will remove the test cap and weld the MQX1 bellows assembly to an identical bellows assembly attached to the Q3 magnet. This is shown on FNAL Drawing 5520-ME-390469[11].

II. Pressure Test Hazards

The chief hazards in this test arise from the stored energy in the pressurized gas providing a driving force that could eject projectiles from the assembly.

The possible projectiles include:

- Ejection of the potted plug out of the housing
- Blow-off of the MBX1 or MQX1 Test Cap
- Blow-off of the Helicoflex blank flange
- Rupture of the MQX1 Bellows

The last two items are manufactured items with a design pressure rating of 20 bar, so they are extremely unlikely events.

Helicoflex state that the maximum torque that should be applied to the tightening screw is 18 Nm (13 ft-lbs).

The stored energy of the pressurized magnet-side piping of either MBX1 or MQX1 is given by:

$$U = \frac{P_h V_h}{\gamma - 1}\left[1 - \left(\frac{P_l}{P_h}\right)^{\frac{\gamma-1}{\gamma}}\right],$$

where U = stored energy in N-m (J)
P_h = Initial Vessel Pressure (absolute) in N/m^2 (Pa) = 25 bar = 2.5 MPa
P_l = Final Vessel Pressure (absolute) in N/m^2 (Pa) = 0.1 MPa
V_h = Vessel Volume in m^3 = 442 in^3 = 7.2 x 10^{-3} m^3
γ = specific heat ratio, C_P/C_V, = 1.67 for helium and 1.4 for nitrogen.

If we test with dry nitrogen,

$$U = \frac{2.5x10^6 * 7.2x10^{-3}}{1.4 - 1}\left[1 - \left(\frac{.1}{2.5}\right)^{\frac{1.4-1}{1.4}}\right]$$

$$U = 4.5x10^4\left[1 - (.04)^{.286}\right]$$

$$U = 2.7 \text{ x } 10^4 \text{ N-m or } 27 \text{ kJ}$$

The stored energy is quite low, and is equivalent to about 6.6 g of TNT.

If we test with helium,

$$U = \frac{2.5x10^6 * 7.2x10^{-3}}{1.67-1}\left[1-\left(\frac{.1}{2.5}\right)^{\frac{1.67-1}{1.67}}\right]$$

$$U = 2.69x10^4\left[1-(.04)^{401}\right]$$

$$U = 2.0 \text{ x } 10^4 \text{ N-m or } 20 \text{ kJ}$$

The stored energy is quite low, and is equivalent to about 5 g of TNT.

In spite of the rather low stored energies, the part should be tested behind a protective barricade such as inside a 1-inch-thick plywood box. The box should be large enough to accommodate the styrofoam dewar for cold pressure testing. The corners should be reinforced with 2 inch Al angle. The top should be easily removable to allow the part to be placed inside. The high pressure line and LN fill tube can also penetrate through the top.

III. Calculations

Allowable pressure in 3 inch pipe, fittings, and welds.

Assume full penetration welds, without Radiographic Testing. Using the ASME Boiler and Pressure Vessel Code as a guide, the allowable pressure in psi is given by:

$$P = \frac{SEt}{R+.6t},$$

where S = allowable stress (psi) = 16,500 psi for 304L stainless steel
E = Joint Efficiency =.65 because of the welds
R= inner radius = 1.63
t = wall thickness (inch) = .12 inch

$P_{allowable}$ = 756 psig

The test pressure of 370 psig is considerably below the allowable pressure of 756 psig.

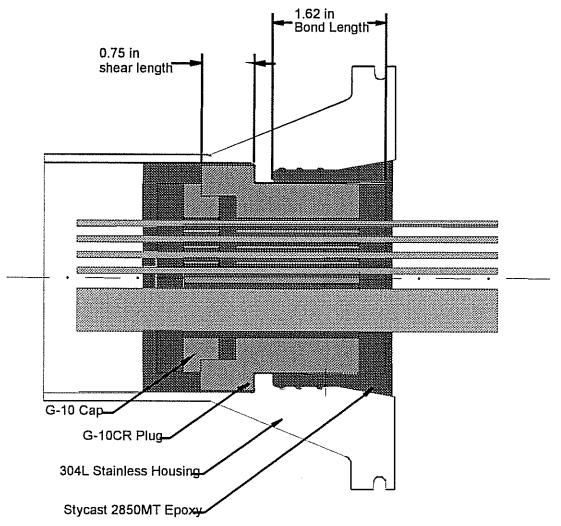

Figure 3. Cross-sectional sketch of the Lambda Plug.

Shear Stress in Stycast 2850MT bond between 304 Stainless Steel and the G-10CR Insulator block.
We take the limiting case that the entire pressure load is carried by the Stycast epoxy bond between the stainless housing and the G-10CR insulator block,

$$\tau_{shear} = \frac{PA_{pipe}}{A_{shear}}$$

$$\tau_{epoxy} = P\frac{\pi r_i^2}{2\pi r_{G-10} l_{epoxy}},$$

where P = test pressure = 370 psig
r_i = inner radius of piping = 1.63 inch
r_{G-10} = outer radius of G-10CR insulator = 1.35 inch
l_{epoxy} = length of epoxy bond = 1.62 inch

$$\tau_{epoxy} = 370x\frac{1.63^2}{2*1.35*1.62}$$

$$\tau_{epoxy} = 225psi$$

Shear Stress in NEMA G-10CR Plug
In this case we have the limiting case in which the pressure load is carried by a shear load in the end of the G-10 insulator block.

$$\tau_{G-10} = P\frac{\pi r_i^2}{2\pi r_{G-10*} l_{G-10}}$$

where P = test pressure = 370 psig
r_i = inner radius of piping = 1.63 inch
r_{G-10*} = outer radius of G-10CR insulator joint = 1.1 inch
l_{G-10} = shear length of G-10CR = .75 inch

$$\tau_{G-10} = 370\frac{1.63^2}{2*1.1*.75}$$

$$\tau_{G-10} = 596 psi$$

These shears are very low and are well within the materials' capability. In [1, 12], pre-prototype lambda plugs were pressure-tested to 420 psig (29 bar) at LN temperature with no degradation in properties.

The closeout weld for the MBX1 test cap is a .06 inch edge weld with a diameter of 3 inch. Using the formula for allowable hoop stress,

$$P = \frac{SEt}{R},$$

we find the allowable pressure to be 429 psi, using the same allowables as in the above. The shear stress on the closeout weld in 4,625 psi for the 370 psig test pressure. The MBX1 test cap closeout weld is thus safe to test to 370 psig.

The bellows assembly for the MQX1 is welded to the horizontal pipe section with a .125 inch filet weld. This weld can be subjected to a maximum 7300 lb shear load from the bellows restraint assembly. The resulting shear stress through the weld throat is 7300/(π x 3.5 x .707 x .125) = 7500 psi. This is less than the stress allowable of 16,500 psi for the weld metal.

The MQX1 test cap closeout weld is a .08 filet weld with a mean diameter of 5.36 inch. The hoop stress through the weld throat at the 290 psi design pressure is 13,740 psi. This is less than the stress allowable of 16,500 psi. This is therefore safe to test to 390 psig.

Pressure and Leak Testing Data Sheets

Photocopy the sheets in this section and fill out for each Bus Duct

Housing Number _____

IV. Pressure & Leak Testing

a. OP 700 (MBX1), OP 700 (MQX1): Post-Weld Leak Check

Connect a calibrated helium mass spectrometer leak detector to Item 6, Figure 1 for the MBX1 or to Item 7, Figure 2 for the MQX1 and leak check the closeout welds using a tracer probe method in which helium is sprayed over the weld joints. The leak rate should be less than $1x10^{-9}$ atm cc/sec (helium).

The maximum acceptable room temperature helium leak rate for the lambda plug itself is 0.1 atm cc/sec (helium), which exceeds the maximum leak rate that can be measured with a conventional helium mass-spectrometer type leak detector. If the lambda plug leak rate is too high for the leak detector, pump in parallel on the Conductor Protection Tube with the leak detector.

Date: _____ Helium Leak Rate: _____ Signed: _____

Parallel Pumping on Conductor Protection Tube? Yes _____ No _____

Witnessed: _____

b. OP 710 (MBX1), OP 710 (MQX1): Thermal Shock to LN Temperature

Make sure a teflon Oring is used to seal the Protection tube to the Lambda Plug Housing.
Pressurize both sides of the assembly shown in Figure 1 or Figure 2 to 20 psig with pure neon gas, valve the gas supply off and submerge the assembly in a bath of Liquid Nitrogen. Neon is used in place of helium gas to avoid saturating the conductor insulation with helium.
Hold in the LN bath for at least 1 hour to allow the part to reach LN temperature.
Remove from Liquid Nitrogen bath and allow the part to reach room temperature. Set up a fan to circulate a flow of air over the part and speed the warmup. Allow sufficient time for the part to defrost and become dry.
Repeat the process to obtain 2 thermal cycles.

Signed: _____

Witnessed: _____

c. OP 720 (MBX1), OP 720 (MQX1): Room Temperature Pressure Test

The pressure test is to be performed using dry nitrogen gas.

Hook up dry nitrogen gas source to the magnet side piping as indicated in Figure 3.

Use pressure safety manifold M8104-6 with a relief valve set to 500 psig.

Allow any leakage across the lambda plate to be vented out the Conductor Protection Tube.

Place the part in the protective barrier described above.

Raise the pressure to 370 psig in steps of about 50 psi. Pause at each step for 60 sec. When 370 psig is attained, close the shutoff valve and record the test gauge reading for 10 minutes at 1 minute intervals.

Reduce pressure slowly to 0 psig.

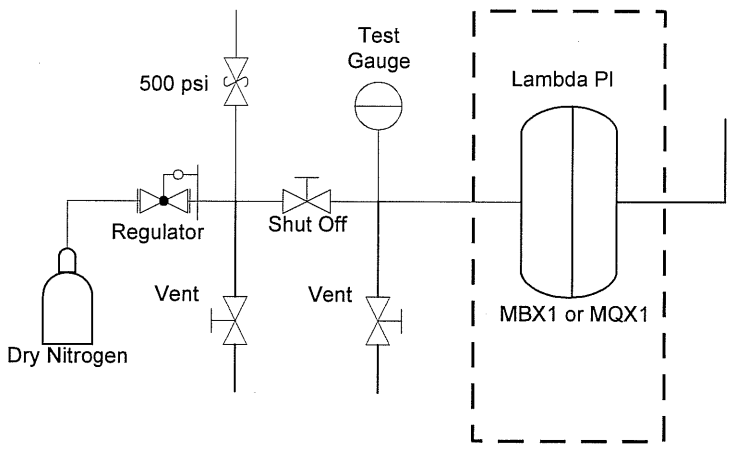

Figure 3. Pressure Test Setup.

Date: _____

Time:_____ Pressure: _____
Time:_____ Pressure: _____
Time:_____ Pressure: _____
Time:_____ Pressure: _____
Time:_____ Pressure: _____

Time:_____ Pressure: _____
Time:_____ Pressure: _____
Time:_____ Pressure: _____
Time:_____ Pressure: _____
Time:_____ Pressure: _____
Time:_____ Pressure: _____
Time:_____ Pressure: _____
Time:_____ Pressure: _____
Time:_____ Pressure: _____
Time:_____ Pressure: _____

Signed: _____

Witnessed: _____

d. OP 730 (MBX1), OP 730 (MQX1): Leak Check after Room Temperature Pressure Test

Connect a calibrated helium mass spectrometer leak detector to Item 6, Figure 1 for the MBX1 or to Item 7, Figure 2 for the MQX1 and leak check the closeout welds using a tracer probe method in which helium in sprayed over the weld joints. The leak rate should be less than $1x10^{-9}$ atm cc/sec (helium).

The maximum acceptable room temperature helium leak rate for the lambda plug itself is 0.1 atm cc/sec (helium), which exceeds the maximum leak rate that can be measured with a conventional helium mass-spectrometer type leak detector. If the lambda plug leak rate is too high for the leak detector, pump in parallel on the Conductor Protection Tube with the leak detector.

Date: _____ Helium Leak Rate: _____ Signed: _____

Parallel Pumping on Conductor Protection Tube? Yes _____ No _____

Witnessed: _____

e. OP 740 (MBX1), OP 740 (MQX1): Pressure Test at LN Temperature

The pressure test is to be performed using neon gas, with the assembly immersed in liquid nitrogen.

Hook up the neon gas source to the Assembly as indicated in Figure 4.

Use pressure safety manifold M8104-6 with a relief valve set to 500 psig.

Allow any leakage across the lambda plug to be vented out the Conductor Protection Tube through a relief valve set to 30 psig The relief valve is at room temperature.

Place the part in the protective barrier described above and fill the styrofoam dewar with liquid nitrogen..

Raise the pressure to 370 psig in steps of about 50 psi. Pause at each step for 60 sec. Maintain at 370 psig for 10 minutes.

Reduce pressure slowly to 0 psig.

Allow the assembly to reach room temperature

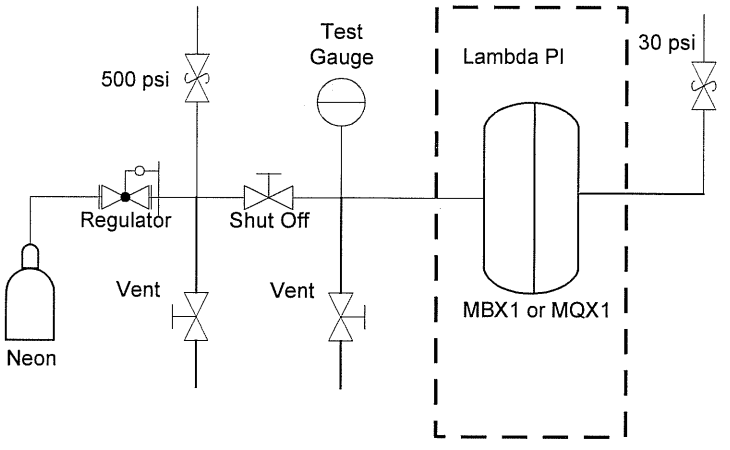

Figure 4. LN Temperature Pressure Test Setup.

Date: _____

Time:_____ Pressure at 370 psig
Time:_____ Pressure released to 0 psig

Signed: _____

Witnessed: _____

f. OP 750 (MBX1), OP 750 (MQX1): Leak Check after LN Temperature Pressure Test

Connect a calibrated helium mass spectrometer leak detector to Item 6, Figure 1 for the MBX1 or to Item 7, Figure 2 for the MQX1 and leak check the closeout welds using a tracer probe method in which helium in sprayed over the weld joints. The leak rate should be less than $1x10^{-9}$ atm cc/sec (helium).

The maximum acceptable room temperature helium leak rate for the lambda plug itself is 0.1 atm cc/sec (helium), which exceeds the maximum leak rate that can be measured with a conventional helium mass-spectrometer type leak detector. If the lambda plug leak rate is too high for the leak detector, pump in parallel on the Conductor Protection Tube with the leak detector.

Date: _____ Helium Leak Rate: _____ Signed: _____

Parallel Pumping on Conductor Protection Tube? Yes _____ No _____

Witnessed: _____

g. OP 760 (MBX1), OP 760 (MQX1): Lambda Plug Leak Check after LN Temperature Pressure Test

The maximum acceptable helium leak rate for the lambda plug is 0.1 atm cc/sec (helium), which exceeds the maximum leak rate that can be measured with a conventional helium mass-spectrometer type leak detector. Follow the steps in g.1 if the leak rate can be measured with a conventional leak detector. If the leak rate cannot be measured with a mass spectrometer, perform a rate of rise measurement in g.2 or g3.

g.1 Leak Detector Method

Remove the Conductor Protection Tube and connect a helium mass spectrometer leak detector to the assembly as in part IV-a above. Apply a spray of Helium gas to the exposed conductors.
Measure and record the room temperature leak rate.

Date: _____ Helium Leak Rate: _____ Signed: _____

Witnessed: _____

g.2 Rate of Pressure Rise Method

Install a "Rad-Lab" Tee fitting to the Helicoflex Seal Flange. Connect one leg of the Tee to a pumping station through a Veeco-style vacuum valve and install a Convectron vacuum gauge on the other leg. Make sure the Conductor Protection Tube is opened to the atmosphere.

Evacuate the piping to about 20 mTorr.
Close the Veeco valve and record the reading of the convectron gage every 60 sec.
Allow the pressure to rise to about 10 Torr.
Note: The trapped volume is 7.2 liter, so the rate of pressure rise must be less than 3.8 mTorr/sec to pass this test.

Date: _____

Time:_____ Pressure: _____
Time:_____ Pressure: _____
Time:_____ Pressure: _____
Time:_____ Pressure: _____
Time:_____ Pressure: _____
Time:_____ Pressure: _____
Time:_____ Pressure: _____
Time:_____ Pressure: _____
Time:_____ Pressure: _____
Time:_____ Pressure: _____
Time:_____ Pressure: _____
Time:_____ Pressure: _____
Time:_____ Pressure: _____
Time:_____ Pressure: _____
Time:_____ Pressure: _____

Signed: _____

Witnessed: _____

g3. Alternate Rate of Pressure Rise Method

Install a "Rad-Lab" Tee to the Conflat Flange on the end of thje Conductor Protection Tube.

Connect one leg of the Tee to a pumping station through a Veeco-style vacuum valve and install a Convectron vacuum gauge on the other leg.

Make sure the Helicoflex flnage is opened to the atmosphere.
Evacuate the Conductor Protection Tube to about 20 mTorr.
Close the Veeco valve and record the reading of the convectron gage every 60 sec.
Allow the pressure to rise to about 10 Torr.

Note: The trapped volume for MBX1 is 4.3 liter, so the rate of pressure rise must be less than 6.5 mTorr/sec to pass this test, and the trapped volume for MQX1 is 8.3 liter, so the rate of pressure rise must be less than 3.4 mTorr/sec tp pass this test.

Date: _____

Time:_____	Pressure: _____
Time:_____	Pressure: _____
Time:_____	Pressure: _____
Time:_____	Pressure: _____
Time:_____	Pressure: _____
Time:_____	Pressure: _____
Time:_____	Pressure: _____
Time:_____	Pressure: _____
Time:_____	Pressure: _____
Time:_____	Pressure: _____
Time:_____	Pressure: _____
Time:_____	Pressure: _____
Time:_____	Pressure: _____
Time:_____	Pressure: _____
Time:_____	Pressure: _____

Signed: _____

Witnessed: _____

V. Labeling

A "LBNL Pressure Tested" label will be attached to each bus duct to provide a lasting record of the pressure testing that was done. The label (in draft form) is shown below. The label will be made from .016 inch (0.4 mm) thick 304L stainless steel. The majority of the information will be silk screened using blue epoxy ink. This has been verified to withstand thermal cycling to LN temperature and should withstand cycling to 2K.

Fill in the following information using an electric vibrating pencil:

A: For MBX1 it should read 25M859 and for MQX1 it should read 25M857
B: Use the Housing Number entered on the appropriate fabrication traveler
C: Enter the LBNL employee number of the person who performed the test
D: Enter the date the test was performed; should correspond to the date entered on the traveler

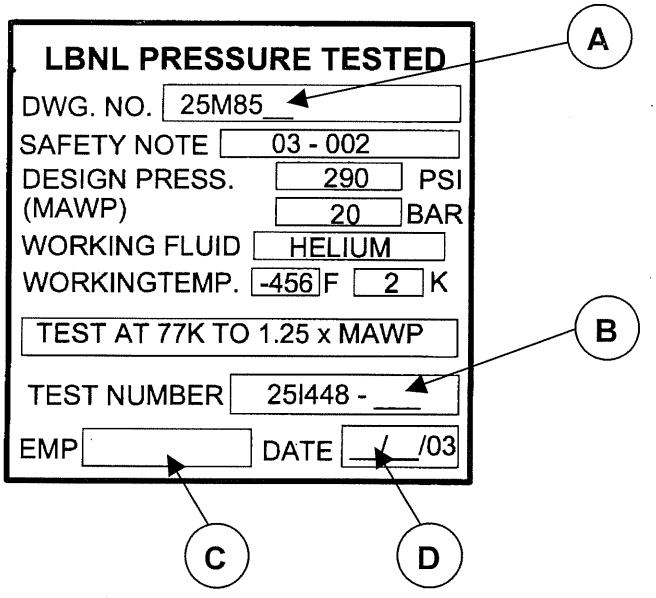

Attach the label to the bus duct by a small tack weld in each of the 4 corners. Attach the label on the vertical pipe section, directly opposite the 1.5 IPS section.

VI. Associated Procedures

All relevant procedures required to complete the testing are contained in this safety note.

VII. References

1. Jon Zbasnik, "Lambda Plug R&D Report", LBNL Engineering Note M8162.
2. LBNL Drawing 25M859, "Pipe Weldment, MBX1"
3. LBNL Drawing 25M857, "Pipe Weldment, MQX1"
4. LBNL Drawing 25M911, "MBX1 Vertical Pipe Assembly"
5. LBNL Drawing 25M908, "MQX1 Vertical Pipe Assembly"
6. LBNL Drawing 25M913, "MBX1 Test Cap"
7. A drawing will be prepared by BNL that details this connection.
8. LBNL Drawing 25M907, "MQX1 Horizontal Pipe Assembly"
9. LBNL Drawng 25M950,"MQX2 Test Cap Assembly"
10. LBNL Drawing 25M957,"MQX1 Restraint Assembly"
11. FNAL Drawing, 5520-ME-390469, "Interconnect Layout"
12. Jon Zbasnik, "Pressure Test of Pre-Prototype High-Current Feedthrough", LBNL engineering Note M8104

VIII. Signature Authority and Distribution

This safety note must be signed by the following: Jon Zbasnik (author), Joseph Rasson (DFBX Manager), and William Thur (Pressure Safety Committee).

The note shall be distributed to the signers as well as to: William Gath (Assembly Shop), Matt Katowski (EH&S Representative), Maurizio Bona (CERN TIS), and to the LBNL Mechanical Engineering Safety File.