Document ID:

899

LHC Q1 LMQXA Cold Mass Module Assembly Traveler

333754 / Rev. NONE

Job No:	**248**
E + F Project/Task No.:	**300/1.1.1.6.2**
M + S Project/Task No.:	**300/1.1.1.6.2**

Place This Side Down For Scanning!!!

LMQXA01-0

Document ID:

899

Job No.:

248

Project/Task No.

300/1.1.1.6.2

Series:

LQXA

Serial No:

LMQXA01

Rework ID:

0

Specification No.:

333754

Revision:

NONE

LMQXA01-0

Fermi National Accelerator Laboratory
Batavia, IL 60510

LARGE HADRON COLLIDER
Q1 - LMQXA
COLD MASS MODULE ASSEMBLY TRAVELER

Reference Drawing(s):
Q1 Cold Mass Welded Assembly (ME-390526)
Q1 Module Assembly (ME-369894)

Project/Task Number: *300/1.1.1.6.2*	
Released By: *J. Szostak*	**Magnet/Device Series:** *LQXA*
Date Issued: *10/17/03*	**Scanned Pages:** 102
Prepared by: J. Szostak	

Title	Signature	Date
TD / E&F Process Engineering	Bob Jensen / Designee	
TD / LHC Production Supervisor	Jim Rife / Designee	
TD / LHC Production Engineer	Rodger Bossert / Designee	
TD / LHC Project Engineer Cryostat	Tom Nicol / Designee	
TD / LHC Project Physicist	Michael Lamm / Designee	
TD / LHC Program Manager	Jim Kerby / Designee	

Revision Page

Revision	Step No.	Revision Description	TRR No.	Date
None	N/A	Initial Release	N/A	10/17/03

Ensure appropriate memos and specific instructions are placed with the traveler before issuing the sub traveler binder to production.

1.0 General Notes

1.1 All steps that require a sign-off shall include the Technician/Technician(s)s first initial and full last name.

1.2 No erasures or white out will be permitted to any documentation. All incorrectly entered data shall be corrected by placing a single line through the error, initial and date the error before adding the correct data.

1.3 All Discrepancy Reports issued shall be recorded in the left margin next to the applicable step.

1.4 All personnel performing steps in this traveler must have documented training for this traveler and associated operating procedures.

1.5 Personnel shall perform all tasks in accordance with current applicable ES&H guidelines and those specified within the step.

1.6 Cover the product/assembly with Green Herculite (Fermi stock 1740-0100) when not being serviced or assembled.

2.0 Parts Kit List

2.1 Attach the completed Parts Kit for this production operation to this traveler. Ensure that the serial number on the Parts Kit matches the serial number of this traveler. Verify that the Parts Kit received is complete.

J. Szostak
Process Engineering/Designee

* NA
Date

*Parts Kit added at later date

3.0 Q1 Module Alignment

XXX 3.1 Record the serial number for each Magnetic Component Assembly.

Q1 Serial Number: ~~LQXA~~ MQXA - 01

MCBX Serial Number: HCMCBX 001-000003

T. Page
Responsible Authority/Physicist

10/17/03
Date

4.0 Q1 Magnet Placement (Module Assembly Tooling)

4.1 Configure tooling for Q1 Cold Mass Assembly per (ME-369768).

Technician(s) _____ Date 10-16-03

4.2 Configure tooling for Corrector Mounting per (ME-369780), 13.780 Diameter Corrector Magnet.

Technician(s) _____ Date 10/17/03

4.3 Configure tooling for End Dome Mounting per (ME-369765, View F-F) (Insert Item 22).

Technician(s) _____ Date 10-17-03

4.4 Move the Q1 Cold Mass to the Cold Mass Module Assembly Tooling, placing it nearest the West End of ICB, with the Lead End of the Magnet facing East as per Q1 Cold Mass Welded Assembly (ME-XXXXXX).

Technician(s) _____ Date 10-17-03

4.5 Rotate the Q1 Cold Mass, into the proper orientation per figure 1.

Figure 1

Technician(s) _____ Date 10-17-03

TRR#1580

4.6 If needed, perform a stretched wire measurement of the system, noting the relative position and roll of the three magnetic elements to each other.

Performed Stretch Wire Measurement?

Yes ☒ No ☐ (No Signature necessary, if 'No' box is checked)

Technician(s) Responsible Authority/Physicist _____ Date 10/17/03

TRR 1580

4.7 Weld Correction Coil Mounting Flange (MX-XXXXXX) to Q1 Lead End Plate.

Shown BE WELDER SIGN OFF

Technician(s) _____ Date 10/20/03

5.0 Bus & Instrumentation Connection and Assembly

Note(s):

Figure "5.0-A" shows the configuration of magnet and corrector bus leads in a Q1 Magnet.

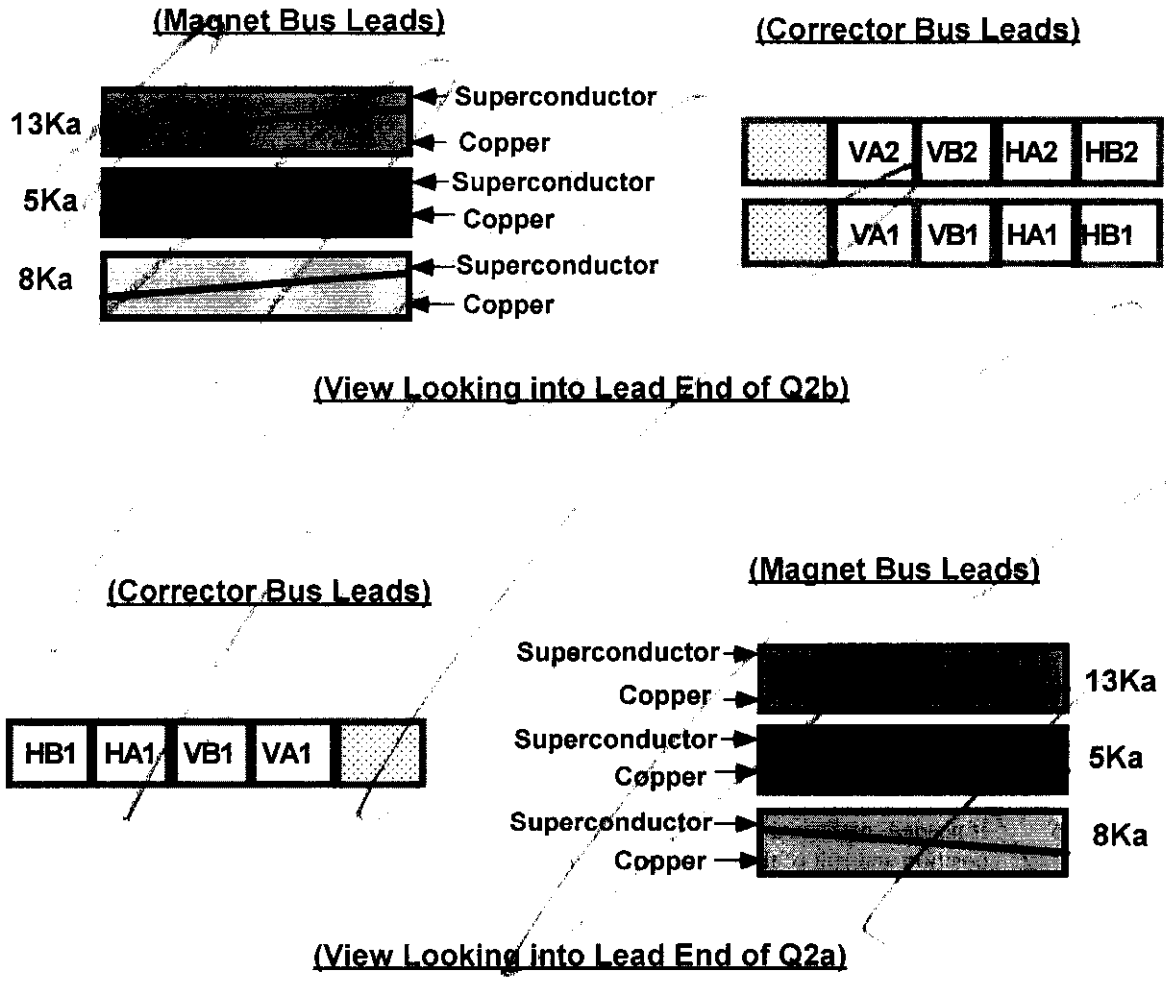

Figure 5.0-A

5.10 Set up the Power Leads for splicing as shown in the Q1 Module Assembly Drawing (ME-369894).

Technician(s) _____ Date 10/20/03

5.11 Construct Expansion Loop Assembly per Drawing (MB-369962).

Technician(s) _____ Date 10/21/03

5.12 Solder the lower 8kA bus to Quadrant ?___? Lead as per Q1 Module Assembly Drawing (ME-369894) and Figure 3.

Technician(s) _____ Date 10-20-03

5.13 Solder the upper 8kA bus to Quadrant ?___? Lead as per Q1 Module Assembly Drawing (ME-369894) and Figure 4.

Technician(s) _____ Date 10-20-03

5.14 Insulate each splice with 2/3 overlap, .002 x 3/8 wide kapton, part no. 229722.

Technician(s) _____ Date 10/21/03

5.15 Insert piece of .005 kapton between splices.

Technician(s) _____ Date 10/22/03

5.16 Put splices together and insulate splice area with ¾ overlap, .002 x 3/8 wide kapton, part no. 229722.

Technician(s) _____ Date 10/22/03

5.17 Attach the Q1 Bus Housing Extension (MD-369872) to Q1 Lead as per Q1 Module Assembly (ME-369894).

Technician(s) _____ Date 10/22/03

5.18 Prepare Q1 Instrumentation wire feedthru. Build per Drawing (ME-430008). Wire Labels and descriptions are shown in Table 5.18 and per (MB-369998).

TRR# 1580

Table 5.18
(Replace with New Table from Rodger)

1	W1aQ1	20	TWIST TOGETHER	FOR WARMUP HEATERS SEE NOTE 3.
2	W2aQ1	20		
3	TaQ1_I+	30	PRE-MADE CABLE	FOR THERMOMETERS (RTD'S)
	TaQ1_I-	30		
	TaQ1_V+	30		
	TaQ1_V-	30		
4	TbQ1_I+	30	PRE-MADE CABLE	
	TbQ1_I-	30		
	TbQ1_V+	30		
	TbQ1_V-	30		

DR# HGQ-0435

5.19 Slide Instrumentation Bus Assembly (ME-430008) into the proper Q1 Port as per Q1 Module Assembly (ME-369894). Verify that there is sufficient slack in cable to allow for differential thermal contraction.

Technician(s) _____ Date 10-21-05

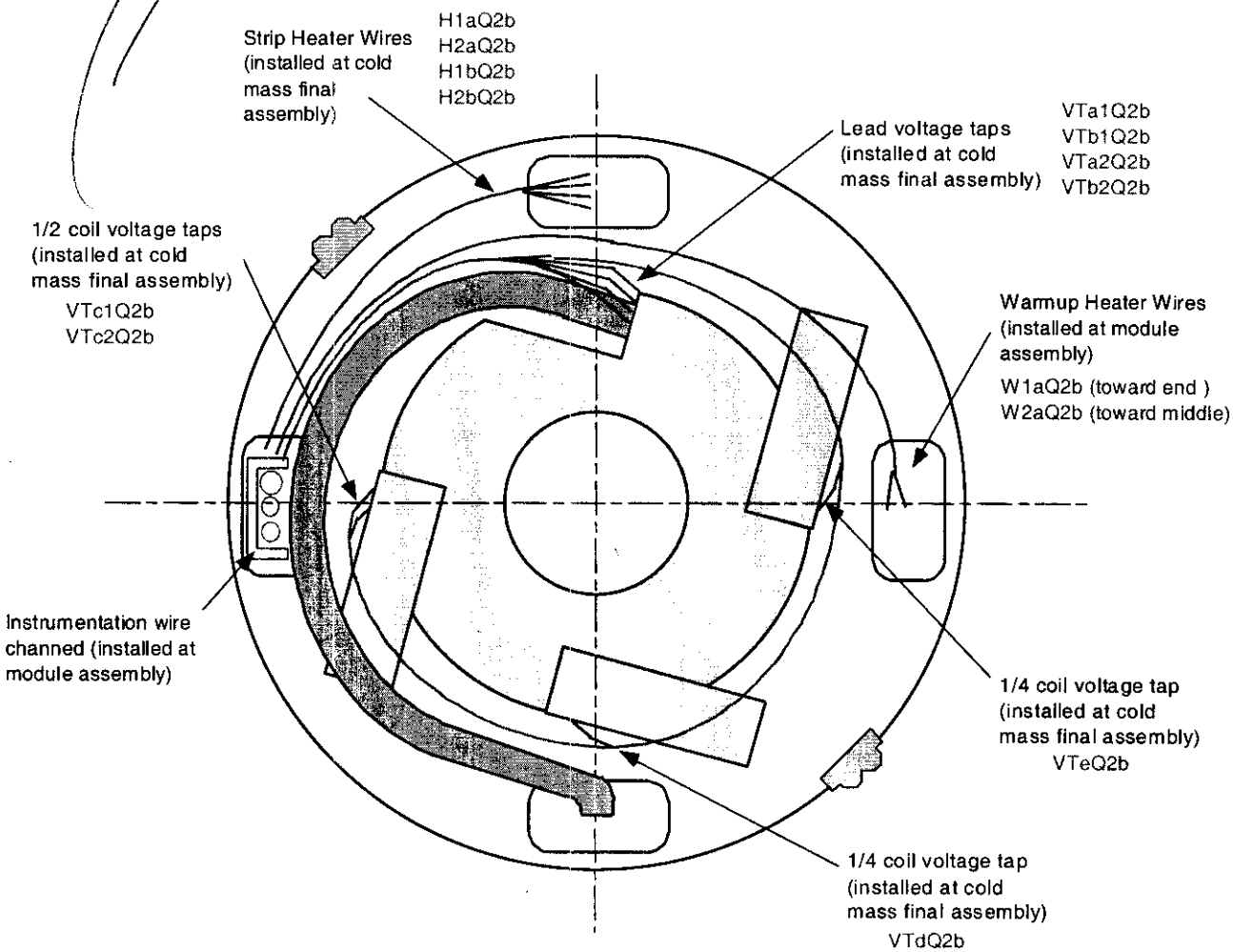

Looking at Non-Lead End of Q1

Figure 5.19-A

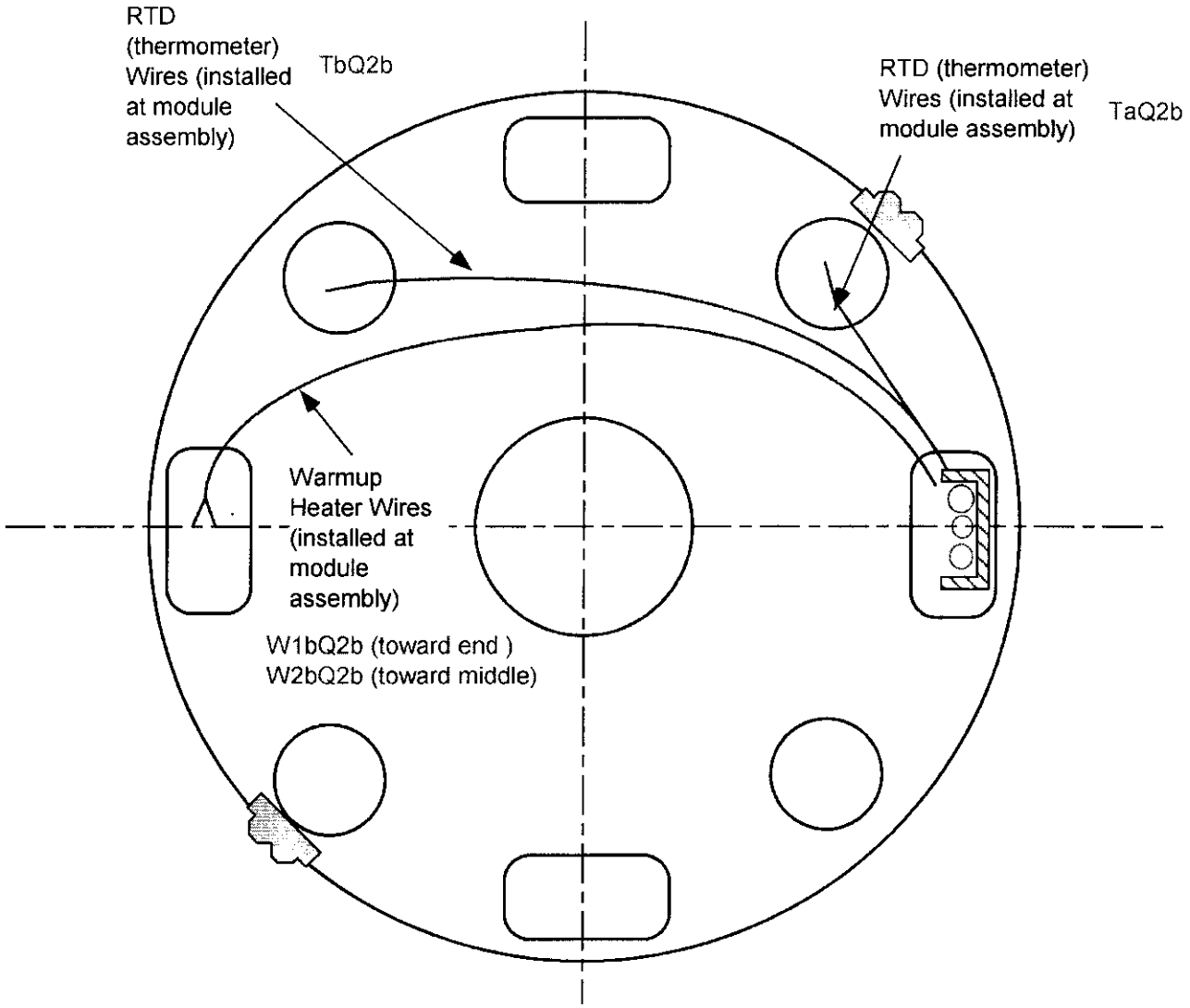

Looking at Lead End of Q1

Figure 5.19-B

5.20 Install Warm-up Heaters (ME-369834) to each end of Q1 as per Q1 Module Assembly (ME-369894).

5.20.1 Install Warm-up Heater Base Plates (MA-369997) by welding onto in End Plate. (Check each box as Heater is installed.)

Warm-up Heater #1 ☑

Warm-up Heater #2 ☑

5.20.2 Install Warm-up Heaters (MA-369834) onto the Warm-up Heater Base Plate (MA-369997).

5.20.3 Solder wires (MA-369833) to the Warm-up Heaters as per (ME-369894).

Technician(s) _____ Date 10/22/03

5.21 Install RTD's as per Q1 Module Assembly (ME-369894). Record Serial Numbers of each RTD in the table below. Attach Data Sheet for each RTD to traveler.

5.21.1 Attach RTD's (MA-369835) (Qty. 2) to Non-Lead End Plate as per Q1 Module Assembly (ME-369894).

5.21.2 Solder wires (MA-369836) to RTD's as per Q1 Module Assembly (ME-369894). Individual RTD wiring is shown in Figure 5.21.2-A below.

TOP VIEW

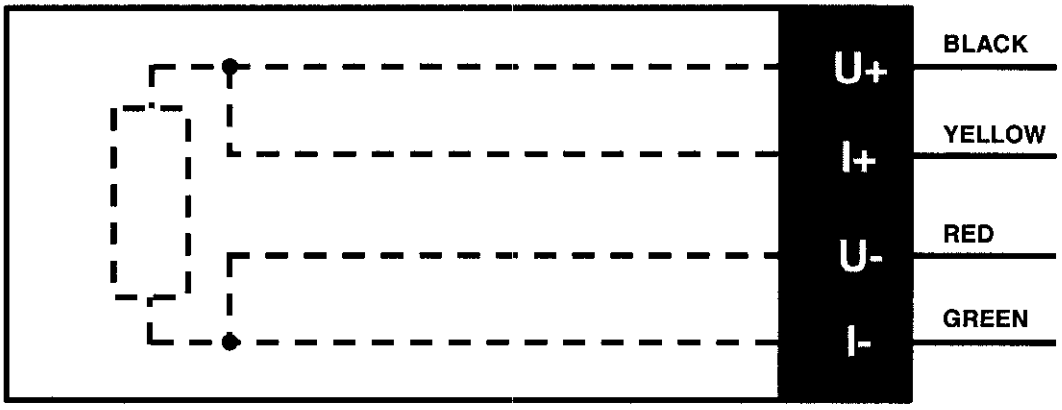

Figure 5.21.2-A

Technician(s) _____ Date 10/22/03

5.22 Perform a continuity check on all RTD's and Warm-Up Heaters. Record the Data below. (1mA)

RTD'S			
Serial No.	**Location**	**Wire No.**	**Resistance @ 1 mA**
CX-LS-X16827	Q1 Inst. Bus Side	TaQ1	73.86
CX-LS-X16839	Q1 Non-Bus Side	TbQ1	76.93

Warm-up Heaters		
Location	**Wire No.**	**Resistance @ 1 mA**
Q1 Lead End	W1aQ1 W2aQ1	16.205
Q1 Non-Lead End	W1bQ1 W2bQ1	16.5706

Technician(s) _____ Date 10/22/03

5.23 Hipot Heaters (300 V) and RTD's (100 V)

RTD'S			
Serial No.	**Location**	**Wire No.**	**Hipot Leakage @ 1 mA**
CX_LSX16827	Q1 Inst. Bus Side	TaQ1	11 nA
CX_LS-X16839	Q1 Non-Bus Side	TbQ1	14 nA

Warm-up Heaters		
Location	**Wire No.**	**Hipot Leakage @ 1 mA**
Q1 Lead End	W1aQ1 W2aQ1	15 nA
Q1 Non-Lead End	W1bQ1 W2bQ1	15 nA

Technician(s) _____ Date 1/30/04

5.24 Attach Linear Cable Clamp to bottom of corrector Magnet.

Technician(s) _____ Date 10/22/03

5.25 Place the MCBX Corrector Magnet (MD-390312) in the Corrector Magnet Mounting Tooling.

Technician(s) _____ Date 10/22/03

5.26 Attach the MCBX Corrector Magnet Alignment Tooling (ME-390390) to the MCBX Corrector Magnet (MD-XXXXXX). Align the Scribe Lines on the Corrector Magnet (MD-390312) with those on the tooling.

Technician(s) _____ Date 10/22/03

5.27 Mount the Mini Level to the top of the MCBX Corrector Magnet Alignment Tooling.

Note(s):

Mini Level should be "zeroed" at reference stand location before this operation.

Technician(s) _____ Date 10/22/03

5.28 Rotate the MCBX Corrector Magnet (MD-390312) such that the Mini Level is Horizontal 0.00 mm/m (+/- 0.05 mm/m).

Technician(s) _____ Date 10/22/03

TRR#1580 550 in lbs TORQUE ON BOLTS!

5.29 Move the MCBX Corrector Magnet (MD-390312) up against the Mounting Ring on the Q1 Magnet, and bolt the MCBX Corrector Magnet (MD-390312) to the Q1 Cold Mass as per Q1 Cold Mass Welded Assembly (ME-XXXXXX).

Technician(s) _____ Date 10/22/03

XXX 5.30 Verify Alignment of MCBX Corrector Magnet (MD-390312) as per Q1 Cold Mass Welded Assembly (ME-XXXXXX).

Responsible Authority/Physicist _____ Date 10/22/03

5.31 Mount the Stabilizer Assembly (ME-430039) onto the top of correction coil as shown in Q1 Module Assembly (ME-369894).

Technician(s) _____ Date 10/22/03

5.32 Feed the Lead End Loop Assembly (ME-369962) through the Stabilizer Assembly as shown in Q1 Module Assembly (ME-369894).

Technician(s) _____ Date 10/22/03

5.33 Feed the Lead End Loop Assembly (ME-369962) through the Linear Cable Clamp Assembly (ME-430040)(bottom)

Technician(s) _____ Date 1/12/03

5.34 Connect the MCBX Corrector Magnet (MD-390312) Bus wires from Bus Assembly (ME-369826) to the MCBX Corrector Magnet (MD-390312) as per Q1 Module Assembly (ME-369894).

Technician(s) _____ Date 1/14/03

5.35 Solder MCBX Corrector Magnet Voltage Tap Wires (MA-369832) as per Q1 Module Assembly (ME-369894).

Technician(s) _____ Date 1/15/04

5.36 Run instrumentation wire bundle along path at top of corrector coil as shown in Q1 Module Assembly (ME-369894). Attach Instrumentation Wire Hold-Down Brackets (ME-430015) as shown in Q1 Module Assembly (ME-369894) and pack with Green Putty.

Technician(s) _____ Date 1/14/04

5.37 Attach Q1 Lead End Spider Assembly to Lead Bus (MB-369962) and Corrector Coil Bus (MB-430XXX) as shown in Q1 Module Assembly (ME-369894).

Technician(s) _____ Date 1/14/04

6.0 Electrical Inspection

6.1 Perform an electrical inspection on each of the individual Quadrants and the Cold Mass. Refer to the Valhalla and Leader Free Standing Coil Measurement Procedure (ES-292306).

DR# HGQ-0444

Note(s):

Ensure that all measurements are recorded correctly, and have the proper value and symbol (i.e., mΩ, mH, etc.).

Valhalla 4300B settings:

Test current	_____	Off (not testing)
Power	_____	On
Full scale voltage	_____	2V
Amp selector knob	_____	1A
Temperature compensator	_____	On
Test current	_____	On (testing)

Hp 4284:

Function	_____	"Ls-Q" selected

Record the Serial Number of the test equipment used.

Valhalla _____

HP 4284 _____

Q1

See Corrected Sheets

(Q1) Resistance			Total
Voltage Tap Serial Numbers		Nominal	560 to 585 mΩ
VTC2Q1 VTDQ1		Quadrant 1	mΩ
VTC2Q1 VTEQ1		Quadrant 2	mΩ
VTDQ1 VTA2Q1		Quadrant 3	mΩ
VTB1Q1 VTEQ1		Quadrant 4	mΩ
Total Cold Mass	**Nominal**	2.305 Ω	Ω

(Q1) Inductance			Total
Voltage Tap Serial Numbers		Nominal	2.880 to 2.935 mH
VTC2Q1 / VTDQ1		Quadrant 1	mH
VTC2Q1 / VTEQ1		Quadrant 2	mH
VTDQ1 / VTA2Q1		Quadrant 3	mH
VTB1Q1 / VTEQ1		Quadrant 4	mH
Total Cold Mass	**Nominal**	13.3376 mH	mH

(Q1) Q-Factor			Total
Voltage Tap Serial Numbers		Nominal	4.5 to 5.2
VTC2Q1 / VTDQ1		Quadrant 1	
VTC2Q1 / VTEQ1		Quadrant 2	
VTDQ1 / VTA2Q1		Quadrant 3	
VTB1Q1 / VTEQ1		Quadrant 4	
Total Cold Mass	**Nominal**	5.036	

Done in Attachment Sheets

Technician(s) _____ Date _____

(Q1) Resistance Test	Limit	Actual Measurement
(Q1) Heater Circuit A	18.20 to 21 Ω	Ω
(Q1) Heater Circuit B	18.20 to 21 Ω	Ω

Technician(s) _____ Date _____

MCBX Corrector Coil Taps		
Component	**Wire Labels**	**Resistance**
Tap 1	3E8111	21.83
Tap 2	5E8121	19.88

Technician(s) 1-22-04 Date

XXX 6.2 Hipot according to table below. Hipot to 5kV. Maximum leakage is 3μA.

Hipot Heaters to Coil and Ground.

High Potential	Grounded	Floating	Leakage
All Strip Heaters	Coils, Yoke, Corrector Leads???	RTD's and Warm-up Heaters	7.52 nA

Hipot Coil to Heaters and Ground.

High Potential	Grounded	Floating	Leakage
All Coils	Strip Heaters, Yoke, Corrector Leads???	RTD's and Warm-up Heaters	515 nA

Technician(s) 1/22/04 Date

Responsible Authority/Physicist 1/22/04 Date

7.0 Dome Setup

7.1 Attach IP End Dome (MD-390XXX) (Q1) to the End Dome Positioning Fixture (MD-369776).

Technician(s) _____ Date 10-22-03

7.2 Align IP End Dome (MD-390XXX) as shown in Q1 Cold Mass Welded Assembly (ME-XXXXXX).

Technician(s) _____ Date 10-22-03

7.3 Level the IP End Dome (MD-390XXX) using the Ball Socket (MD-369777) and the Mini Level.

Technician(s) _____ Date 10-22-03

7.4 Mark the IP End Dome (MD-390XXX) and the End Plate with a Horizontal Witness Line. This Step will be used in Step 9.4 to reposition the Domes prior to Welding.

Technician(s) _____ Date 10-22-05

7.5 Remove the IP End Dome (MD-390XXX) from the Tooling.

Technician(s) _____ Date 10-22-05

7.6 Attach Non-IP End Dome (MD-390XXX) (Q1) to the End Dome Positioning Fixture (MD-369776).

Technician(s) _____ Date 10-22-03

7.7 Align Non-IP End Dome (MD-390XXX) as shown in Q1 Cold Mass Welded Assembly (ME-XXXXXX).

Technician(s) _____ Date 10-22-03

7.8 Level the Non-IP End Dome (MD-390XXX) using the Ball Socket (MD-369777) and the Mini Level.

Technician(s) _____ Date 10-22-03

7.9 Feed the Electrical wires/bus through the proper ports as the Non-IP End Dome (MD-390XXX) is brought into position against the End Plate.

Technician(s) _____ Date 10-22-03

7.10 Mark the Non-IP End Dome (MD-390XXX) and the End Plate with a Horizontal Witness Line. This Step will be used in Step 9.7 to reposition the Domes prior to Welding.

Technician(s) _____ Date 10-22-03

7.11 Remove the Non-IP End Dome (MD-390XXX) from the Tooling.

Technician(s) _____ Date 10-22-03

8.0 Beam Tube Insertion

8.1 Inspect the Beam Tube (MD-369XXX) for damage. Clean Beam Tube using lint free Heavy Duty Wipers (Fermi stock 1660-0150) and Isopropyl Alcohol (Fermi stock 1920-0300) as per Insulated Beam Tube Assembly for Q1/Q1 (MD-369XXX).

Technician(s) _____ Date 1-22-04

XXX ~~8.2~~ Verify Alignment of Q1, Q1 and Corrector Magnet (MD-390312) as per Q1 Cold Mass Welded Assembly (ME-XXXXXX).

delete step TRR 1612

Responsible Authority/Physicist _____ Date 1/22/04

8.3 Using Insertion Tooling, insert the Beam Tube (MD-369XXX) into the Magnet Assembly as per Beam Tube Insertion Tooling (MD-369789).

Technician(s) _____ Date 1-22-04

8.4 Position the Beam Tube (MD-369XXX) longitudinally according to ***(Tom Page)*** Drawing (MX-XXXXXX).

Technician(s) _____ Date 1-22-04

8.5 Measure the Beam Tube length and record this measurement below.

8.5.1 Beam Tube Length: 3410 m

8.5.2 Subtract X mm (± 2mm) from the Beam Tube Length, and record here: 7725 685

8.5.3 Divide the Number recorded in step 8.5.2 by 2 and record here: 3425

The measurement recorded in step 8.5.3 is the amount to be cut off from each end.

Technician(s) _____ Date 1-22-04

8.6 Measure from one end of the Beam Tube and place a mark at the distance from step 8.5.3.

Technician(s) _____ Date 1-23-09

8.7 Verify the placement of the Mark, measured in Step 8.6 is correct.

Crew Chief _____ Date 1/23/09

8.8 Using the Wachs Cutter, cut the Beam Tube at the Mark from Step 8.6.

Technician(s) _____ Date 1-23-09

8.9 Measure from one end of the Beam Tube and place a mark at the distance from step 8.5.3.

Technician(s) _____ Date 1-23-09

8.10 Verify the placement of the Mark, measured in Step 8.9 is correct. Measuring from the End Plate, this mark should be equal to the 'End Plate to Beam Tube' distance at the other end.

Crew Chief _____ Date 1/23/09

8.11 Using the Wachs Cutter, cut the Beam Tube at the Mark from Step 8.9.

Technician(s) _____ Date 1-23-09

TRR# 1580 bad

XXX 8.12 Hipot the Beam Tube to coil, heaters and ground. (Max. Leakage < 0.5μA)

Hipot	Leakage or Failure Voltage	Pass	Fail
Beam Tube to coil, heaters and ground	064	✓	

Technician(s) _____ Date 1-29-09

Responsible Authority/Physicist _____ Date 1/29/09

9.0 Dome Installation

X 9.1 Tack weld the corrector mounting hardware in place as per Q1 Cold Mass welded assembly (ME-XXXXXX).

Weldor(s) _____ Date 1/20/04

9.2 If needed, perform a stretched wire measurement of the system, noting the relative position and roll of the three magnetic elements to each other.

Performed Stretch Wire Measurement?

Yes ☐ No ☑ (No Signature necessary, if 'No' box is checked)

Technician(s) N/A Date _____

9.3 Mount and adjust the Shipping restraint screws.

Note(s):
Weld to corrector if necessary.

Technician(s) _____ Date 1/31/04

9.4 Reposition the IP End Dome as shown in Q1 Cold Mass Welded Assembly (ME-XXXXXX) using the Horizontal Witness Line from step 7.4.

Technician(s) _____ Date 1/31/04

9.5 Tack weld the IP End Dome in place at approximately 6-8 places around the Dome per (ME-XXXXXX).

Weldor(s) _____ Date 1/31/04

9.6 Weld the IP End Dome, skip weld around to minimize distortion per (ME-XXXXXX).

Weldor(s) _____ Date 1/31/04

9.7 Reposition the Non-IP End Dome as shown in Q1 Cold Mass Welded Assembly (ME-XXXXXX) using the Horizontal Witness Line from step 7.10.

Technician(s) _____ Date 2/4/04

9.8 Feed the Electrical wires/Bus through the proper ports as the Non-IP End Dome is brought into position against the End Plate.

Technician(s) _____ Date 2/4/04

9.9 Ensure Spider Assemby (MC-369973) is installed properly as in Q1 Module Assembly (ME-369894).

Crew Chief _____ Date 2/4/04

TRR# 1580

9.10 Tack weld the Non-IP End Dome in place at approximately 6-8 places around the Dome as per (ME-XXXXXX).

Weldor(s) _____ Date 2-4-04

9.11 Weld the Non-IP End Dome, skip weld around to minimize distortion as per (ME-XXXXXX).

Weldor(s) _____ Date 2-4-04

10.0 Cold Bore

10.1 Flare both ends of the Beam Tube using Flaring Tool (MC-390416) per Q1 Cold Mass Welded Assembly (MB-390309).

Technician(s) _____ Date 1-28-04

10.2 Add Spacer between Beam Tube Flange and IP End Dome, if necessary.

Spacer Added? Yes ☑ No ☐

Technician(s) _____ Date 2-6-04

10.3 Position Cold Bore Flange (MC-390300) over the Beam Tube and onto IP End Dome per Q1 Cold Mass Welded Assembly (MB-390309).

Technician(s) _____ Date 2 6-04

10.4 Weld the Beam Tube to the Flange at IP End as per Q1 Cold Mass Welded Assembly (ME-XXXXXX).

Weldor(s) _____ Date 2/6/04

10.5 Position the Cold Bore Flange (MC-390300) over the Beam Tube and onto the Non-IP End Dome (Q1) per Q1 Cold Mass Welded Assembly (MB-390309).

Technician(s) _____ Date 2-6-04

10.6 Weld Beam Tube to Flange at NON-IP End as per Q1 Cold Mass Welded Assembly (ME-XXXXXX).

Weldor(s) _____ Date 2/6/04

TRR 1612

add step before 10.7 to perform a stretched wire measurement.

10.7 Align Beam Tube and the Flange at IP End per Q1 Cold Mass Welded Assembly (MB-390309).

Technician(s) _____ Date 2/10/04

10.8 Weld the Flange to the IP End Dome as per Q1 Cold Mass Welded Assembly (ME-XXXXXX).

Weldor(s) _____ Date 2/10/04

10.9 Align Beam Tube and Flange at NON-IP End per Q1 Cold Mass Welded Assembly (MB-390309).

Technician(s) _____ Date 2/10/04

10.10 Weld the Flange to the Non-IP End Dome as per Q1 Cold Mass Welded Assembly (ME-XXXXXX).

Weldor(s) _____ Date 2/10/04

369894

11.0 Electrical Inspection

TRR# 1580

11.1 Perform an electrical inspection on each of the individual Quadrants and the Cold Mass. Refer to the Valhalla and Leader Free Standing Coil Measurement Procedure (ES-292306).

Note(s):

Ensure that all measurements are recorded correctly, and have the proper value and symbol (i.e., mΩ, mH, etc.).

Valhalla 4300B settings:

Test current	_____	Off (not testing)
Power	_____	On
Full scale voltage	_____	2V
Amp selector knob	_____	1A
Temperature compensator	_____	On
Test current	_____	On (testing)

Hp 4284:

Function	_____	"Ls-Q" selected

Record the Serial Number of the test equipment used.

Valhalla _____

HP 4284 _____

Q1

(Q1) Resistance			Total
Serial Numbers	Nominal		560 to 585 mΩ
VTD1Q1 VTA1Q1	Quadrant 1		mΩ
VTC2Q1 VTEQ1	Quadrant 2		mΩ
VTD2Q1 VTA2Q1	Quadrant 3		mΩ
VTB1Q1 VTEQ1	Quadrant 4		mΩ
Total Cold Mass	**Nominal**	2.305 Ω	Ω

Q1 LMQXA Cold Mass Module Assembly

LHC Serial No.: LMQXA01

Notes:

(Q1) Inductance			Total
Connections	Nominal		2.880 to 2.935 mH
VTC2Q1 VTDQ1	Quadrant 1		mH
VTC2Q1 VTEQ1	Quadrant 2		mH
VTDQ1 VTA2Q1	Quadrant 3		mH
VTB1Q1 VTEQ1	Quadrant 4		mH
Total Cold Mass	Nominal	13.3376 mH	mH

(Q1) Q-Factor			Total
Connections	Nominal		4.5 to 5.2
VTC2Q1 VTDQ1	Quadrant 1		
VTC2Q1 VTEQ1	Quadrant 2		
VTDQ1 VTA2Q1	Quadrant 3		
VTB1Q1 VTEQ1	Quadrant 4		
Total Cold Mass	Nominal	5.036	

Technician(s) _____ Date _____

(Q1) Resistance Test	Limit	Actual Measurement
(Q1) Heater Circuit A	18.20 to 21 Ω	Ω
(Q1) Heater Circuit B	18.20 to 21 Ω	Ω

Technician(s) _____ Date _____

Instrumentation Q1		
Component	**Wire Labels**	**Resistance**
¼ Coil Tap	VTdQ1	
¼ Coil Tap	VTeQ1	
½ Coil Tap	VTc1Q1	
½ Coil Tap	VTc2Q1	
Lead Tap	VTa1Q1	
Lead Tap	VTb1Q1	
Lead Tap	VTa2Q1	
Lead Tap	VTb2Q1	
RTD (Non-LE)	TaQ1	
RTD (Non-LE)	TbQ1	
Warm-up Heater (LE)	W1aQ1 (toward end) W2aQ1 (toward middle)	
Warm-up Heater (Non-LE)	W1bQ1 (toward end) W2bQ1 (toward middle)	

Technician(s) _____ Date _____

MCBX Corrector Coil Taps		
Component	**Wire Labels**	**Resistance**
Tap 1		
Tap 2		

Technician(s) _____ Date _____

XXX 11.2 Hipot according to table below. Hipot to 5kV. Maximum leakage is 3μA.

Hipot Heaters to Coil and Ground.

High Potential	Grounded	Floating	Leakage
All Strip Heaters	Coils, Yoke, Corrector Leads???	RTD's and Warm-up Heaters	

Hipot Coil to Heaters and Ground.

High Potential	Grounded	Floating	Leakage
All Coils	Strip Heaters, Yoke, Corrector Leads???	RTD's and Warm-up Heaters	

Technician(s) Date

XXX 11.3 Verify that the results in Step 11.0 are acceptable.
Approved for next Assembly Procedure.

Responsible Authority/Physicist Date

TRR 1580

STEP NEEDS TO BE BROKEN DOWN INTO SUB STEPS. M. LAMPS WANTS SIGN OFF BEFORE CVR PUT ON CONN.

12.0 Installation of Hypertronics

12.1 Install Hypertronics Connectors at **Non-IP End** as per Q1 Module Assembly (ME-369894) and Hypertronics Connector Assembly Procedure ES-XXXXXX. Pin Numbers for connectors are shown in Table 12.1 below

Table 12.1

CERN Label	Wire Label	Module	Pin No.	Description
EE111Q1	VTa1Q1	M2	1	Q1 Lead Voltage Tap "a", primary
EE112Q1	VTa2Q1	M2	2	Q1 Lead Voltage Tap "a", redundant
EE131Q1	VTc1Q1	M2	3	Q1 Center Voltage Tap "c", primary
EE132Q1	VTc2Q1	M2	4	Q1 Center Voltage Tap "c", redundant
EE151Q1	VTb1Q1	M2	5	Q1 Lead Voltage Tap "b", primary
EE152Q1	VTb2Q1	M3	5	Q1 Lead Voltage Tap "b", redundant
EE811H1	VTH1	M5	1	Corrector Q1 – H1 Voltage Tap
EE811V1	VTV1	M5	2	Corrector Q1 – V1 Voltage Tap
EH111Q1	W1aQ1	M7	1	Q1 Warm-up heater Lead "1", lead end heater
EH151Q1	W2aQ1	M7	2	Q1 Warm-up heater, Lead "2", lead end heater
EH112Q1	W1bQ1	M7	3	Q1 Warm-up heater, Lead "1", non-lead end heater
EH152Q1	W2bQ1	M7	4	Q1 Warm-up heater, Lead "2", non-lead end heater
YT111Q1	H1aQ1	M9	1	Q1 Protection heater, Lead "1", 1-2 & 3-4 circuit heater (ckt. "a")
YT151Q1	H2aQ1	M9	3	Q1 Protection heater, Lead "2", 1-2 & 3-4 circuit heater (ckt. "a")
YT112Q1	H1bQ1	M9	5	Q1 Protection heater, Lead "1", 1-4 & 2-3 circuit heater (ckt. "b")
YT152Q1	H2bQ1	M10	4	Q1 Protection heater, Lead "2", 1-4 & 2-3 circuit heater (ckt. "b")
TT111Q1	TaQ1_I+	M12	1	Q1 RTD, primary
TT121Q1	TaQ1_I+	M12	2	
TT131Q1	TaQ1_V+	M12	3	
TT141Q1	TaQ1_V-	M12	4	
TT112Q1	TbQ1_I+	M12	5	Q1 RTD, redundant
TT122Q1	TbQ1_I-	M12	6	
TT142Q1	TbQ1_V-	M12	10	
TT132Q1	TbQ1_V+	M12	11	

[signature] 2/12/04
Technician(s) Date

XXX 12.2 Check installation of Hypertronics. Ensure Hypertronics were installed as per Q1 Module Assembly (ME-369894) and Hypertronics Connector Assembly Procedure ES-XXXXXX.

[signature] 2/13/04
Technician(s) Date

[signature] 2-13-04
Responsible Authority/Physicist Date

See TRR # 1580

13.0 Final Electrical Inspection

13.1 Perform an electrical inspection on each of the individual Quadrants and the Cold Mass. Refer to the Valhalla and Leader Free Standing Coil Measurement Procedure (ES-292306).

Note(s):

Ensure that all measurements are recorded correctly, and have the proper value and symbol (i.e., mΩ, mH, etc.).

Valhalla 4300B settings:

Test current	_____	Off (not testing)
Power	_____	On
Full scale voltage	_____	2V
Amp selector knob	_____	1A
Temperature compensator	_____	On
Test current	_____	On (testing)

Hp 4284:

Function	_____	"Ls-Q" selected

Record the Serial Number of the test equipment used.

Valhalla _____

HP 4284 _____

Q1

(Q1) Resistance			Total
Serial Numbers	Nominal		560 to 585 mΩ
VTC2Q1	Quadrant 1		
VTEQ1			
VTC2Q1	Quadrant 2		
VTEQ1			mΩ
VTDQ1	Quadrant 3		
VTA2Q1			mΩ
VTB1Q1	Quadrant 4		
VTEQ1			mΩ
Total Cold Mass	Nominal	2.305 Ω	Ω

(Q1) Inductance			Total
Connections	Nominal		2.880 to 2.935 mH
VTC2Q1 VTDQ1	Quadrant 1		mH
VTC2Q1 VTEQ1	Quadrant 2		mH
VTDQ1 VTA2Q1	Quadrant 3		mH
VTB1Q1 VTEQ1	Quadrant 4		mH
Total Cold Mass	Nominal	13.3376 mH	mH

(Q1) Q-Factor			Total
Connections	Nominal		4.5 to 5.2
VTC2Q1 VTDQ1	Quadrant 1		
VTC2Q1 VTEQ1	Quadrant 2		
VTDQ1 VTA2Q1	Quadrant 3		
VTB1Q1 VTEQ1	Quadrant 4		
Total Cold Mass	Nominal	5.036	

Technician(s) _____ Date _____

(Q1) Resistance Test	Limit	Actual Measurement
(Q1) Heater Circuit A	18.20 to 21 Ω	Ω
(Q1) Heater Circuit B	18.20 to 21 Ω	Ω

Technician(s) _____ Date _____

Instrumentation Q1		
Component	**Wire Labels**	**Resistance**
¼ Coil Tap	VTdQ1	
¼ Coil Tap	VTeQ1	
½ Coil Tap	VTc1Q1	
½ Coil Tap	VTc2Q1	
Lead Tap	VTa1Q1	
Lead Tap	VTb1Q1	
Lead Tap	VTa2Q1	
Lead Tap	VTb2Q1	
RTD	TaQ1	
RTD	TbQ1	
Warm-up Heaters (LE)	W1aQ1 (toward end) W2aQ1 (toward middle)	
Warm-up Heaters (Non-LE)	W1bQ1 (toward end) W2bQ1 (toward middle)	

Technician(s) _____ Date _____

MCBX Corrector Coil Taps		
Component	**Wire Labels**	**Resistance**
Tap 1		
Tap 2		

Technician(s) _____ Date _____

XXX 13.2 Hipot according to table below. Hipot to 600V. Maximum leakage is 3μA. Hipot using pins in Hypertronics Connectors. Isolate the Hypertronics Connectors in gas Helium (He) at room temperature during Hipot.

Hipot Heaters to Coil and Ground

High Potential	Grounded	Floating	Leakage
All Strip Heaters	Coils, Yoke, Corrector Coil Leads???	RTD's and Warm-up Heaters	

Hipot Coil to Heaters and Ground

High Potential	Grounded	Floating	Leakage
All Coils	Strip Heaters, Yoke, Corrector Coil Leads???	RTD's and Warm-up Heaters	

Technician(s) _____ Date _____

XXX 13.3 Verify that the results in Step 13.0 are acceptable.
Approved for next Assembly Procedure.

Responsible Authority/Physicist _____ Date _____

14.0 Production Complete

XXX 14.1 Process Engineering verify that the Q1 Cold Mass Module Assembly Traveler (5520-TR-333754) is accurate and complete. This shall include a review of all steps to ensure that all operations have been completed and signed off. Ensure that all Discrepancy Reports, Nonconformance Reports, Repair/Rework Forms, Deviation Index and dispositions have been reviewed by the Responsible Authority for conformance before being approved.

Comments:

_____

_____

_____

_____

_____

_____

_____

_____

Process Engineering/Designee

MAY 0 9 2005
Date

Revision Request Control Number: 1580

Specification Number: 5520 - TR - 333754 Current Revision: NONE

Traveler or Document Title LHC Q1 LMQXA Cold Mass Module Assembly Traveler

Step #/Description of Revision:

4.3 Modified Step. Changed to "Configure tooling for End Dome Mounting per (ME-369765, View E-E.)"
4.5 Modified Step. Changed to "Rotate the Q1 Cold Mass, with the Power Leads facing down, into the proper orientation as shown in Figure 4.5-A." Added New Figure from Rodger Bossert.
4.6 Modified Step. Changed to "Perform a stretched wire measurement of the system to align the Cold Mass within ± .2 mR." Changed Signoff to Responsible Authority/Physicist.
4.7 Added Step. "Mount the Corrector Coil Mounting Ring (ME-390037) to the Corrector Coil (MD-390312)."
4.7 Modified Step. Changed to "Weld Correction Coil Mounting Flange (ME-390037) to Q1 Lead End Plate." (New Step 4.10)
4.8 Added Step. "Position and align the Corrector Coil (MD-390312)."
4.9 Added Step. "Tack weld the Corrector Coil Mounting Ring (ME-390037) to the Q1 Cold Mass Assembly per Q1 Coldmass Welded Assembly (ME-390526)."
4.11 Added Step. "Disassemble the Corrector Coil (MD-390312) from the Corrector Coil Mounting Ring (ME-390037)."
5.0 Modified Step. Replaced Figure 5.0-A with New Figure from Rodger Bossert.
5.11 Modified Step. Changed to "Construct / Obtain Expansion Loop Assembly per Drawing (MB-369962)." (New Step 5.2)
5.11 Added Step. "Weld Warm-up Heater Base Plates (MA-360007) and RTD Mount Blocks to End Plates as per Q1 Module Assembly (ME-369894)."(New Step 5.11)
5.12 Modified Step. Changed to "Solder the lower 8kA bus to Lower Lead as per Q1 Module Assembly Drawing (ME-369894) and Figure 5.0-B."(New Step 5.3)
5.13 Modified Step. Changed to "Solder the upper 8kA bus to Upper Lead as per Q1 Module Assembly Drawing (ME-369894) and Figure 5.0-B."(New Step 5.4)
5.17 Modified Step. Changed to "Attach Q1 Bus Exit Support Part Numbers to Q1 Lead as per Q1 Module Assembly (ME-369894)." (New Step 5.8)
5.18 Modified Step. Added Note: "USE ONLY CERN LABELS ON WIRES." Added New Table from Rodger Bossert. (New Step 5.9)
5.19 Modified Step. Changed to "...Verify that there is sufficient slack in cable to allow for two inches of differential thermal contraction." Replaced Figures with New Figures from Rodger Bossert. (New Step 5.10)
5.20.1 Removed Step. "Install Warm-up Heater Base Plates (MA-369997) by welding onto in End Plate. (Check each box as Heater is installed.)"

John Szostak	Jim Rife	11/10/2003
Originator	Responsible Authority	Date
Revision Incorporated into the Traveler:	John Szostak	2/19/2004
	Revision Incorporated By	Date
Process Engineering Final Review:	Bob Jensen	2/19/2004
	Process Engineering/Designee	Date

Instructions for the completion of the Revision Request Form

Note(s):

Multiple steps may be effected by one Revision Request Form but only one specific Traveler or Document may be effected by each Revision Request Form.

If completing this form by hand, a Revision Request Control Number must be obtained before processing.

If completing this form entirely by electronic means, the printed copy to be filed in the Process Engineering Office is to be initialed by the individual incorporating the Revision Request and the individual who reviewed the Traveler or Document.

Originator Instructions:

1) Specification Number: - Enter the Specification Number of the Traveler or Document to be revised. (Document title is inserted automatically from the spec. #)

2) Current Revision: - Enter the Revision of the Traveler or Document to be revised.

3) Step# / Description of the Revision: - Enter a description of the revision to be made and the step# it applies to, if applicable. If needed to describe the revision attach a copy of the page(s). If the revision is coming from a related document such as a Discrepancy Report or an Engineering Order attach a copy of that document to the Revision Request Form.

4) Originator: - Originator is the person generating the form. (Select Name from List)

5) Responsible Authority: - Responsible Authority is person responsible for the process in question. (Select Name from List)

Process Engineering Office Instructions:

1) Revision Incorporated into the Traveler: - Signature of the individual who incorporated the revision.

2) Process Engineering Final Review: - Review the Traveler or Document revised, sign and date the form. The original completed Revision Request Form will be retained by the Process Engineering Office in the Revision Request Binder.

Revision Request Control Number: 1612

Specification Number: 5520 - TR - 333754 Current Revision: A

Traveler or Document Title LHC Q1 LMQXA Cold Mass Module Assembly Traveler

Step #/Description of Revision:

1.5 Removed Step. "All personnel performing steps in this traveler must have documented training for this traveler and associated operating procedures."
5.17 Removed Step. "Place the MCBX Correction Coil (MD-390312) in the Corrector Magnet Mounting Tooling."
5.18 Removed Step. "Attach the MCBX Corrector Magnet Alignment Tooling (ME-390390) to the MCBX Corrector Magnet (MD-390312). Align the Scribe Lines on the Corrector Magnet (MD-390312) with those on the tooling."
5.19 Removed Step. "Mount the Mini Level to the top of the MCBX Corrector Magnet Alignment Tooling"
5.20 Removed Step. "Rotate the MCBX Correction Coil (MD-390312) such that the Mini Level is Horizontal 0.00 mm/m (+/- 0.05 mm/m)."
5.22 Modified Step. Added Technician Signoff for alignment. (New Step 5.18)
5.28 Added Step. "Add Mount to Face Plate"
5.29 Added Step. "Place Voltage taps as follows: "
7.12 Added Step. "Mount the KEK Cold Mass Leveling Bracket (MD-390711) to the X side of the magnet. Record the serial number of the mini level that will be used below." Per Tom Page.
7.13 Added Step. "Adjust the mini level so that it is level with respect to gravity. See the mini level instructions for this procedure."
7.14 Added Step. "Place the mini level on the leveling bracket so that the readout is facing the Non-IP end (corrector end) of the magnet. Push the level up against the leveling bracket top screws. Record the Magnet Level here" Per Tom Page.
7.15 Added Step. "Remove the mini level but leave the KEK Cold Mass Leveling Bracket (MD-390711) mounted to the Cold Mass." Per Tom Page.
7.16 Added Step. "Move Coldmass to the Assembly Table"
8.2 Removed Step. "Verify Alignment of Q1 and Corrector Magnet (MD-390312) as per Q1 Cold Mass Welded Assembly (ME-390526)." Task completed in step 5.22 per Tom Page and LMQXA01.
8.4 Added Step. "Place a mark 40mm from the laminations on IP End of the Beam Tube."
8.5 – 8.11 Removed Steps. Steps removed per Tom Page.
8.5 Added Step. "Verify that the placement of the mark in Step 8.4 is correct."
8.6 Added Step. "Using the Wachs Cutter, cut the IP End of the Beam Tube at the mark."
8.7 Added Step. "Measure the Beam Tube length and record this measurement below."

John Szostak	Jim Rife	2/24/2004
Originator	Responsible Authority	Date
Revision Incorporated into the Traveler:	John Szostak	6/4/2004
	Revision Incorporated By	Date
Process Engineering Final Review:	Jamie Blowers	6/4/2004
	Process Engineering/Designee	Date

Instructions for the completion of the Revision Request Form

Note(s):

Multiple steps may be effected by one Revision Request Form but only one specific Traveler or Document may be effected by each Revision Request Form.

If completing this form by hand, a Revision Request Control Number must be obtained before processing.

If completing this form entirely by electronic means, the printed copy to be filed in the Process Engineering Office is to be initialed by the individual incorporating the Revision Request and the individual who reviewed the Traveler or Document.

Originator Instructions:

1) Specification Number: - Enter the Specification Number of the Traveler or Document to be revised. (Document title is inserted automatically from the spec. #)

2) Current Revision: - Enter the Revision of the Traveler or Document to be revised.

3) Step# / Description of the Revision: - Enter a description of the revision to be made and the step# it applies to, if applicable. If needed to describe the revision attach a copy of the page(s). If the revision is coming from a related document such as a Discrepancy Report or an Engineering Order attach a copy of that document to the Revision Request Form.

4) Originator: - Originator is the person generating the form. (Select Name from List)

5) Responsible Authority: - Responsible Authority is person responsible for the process in question. (Select Name from List)

Process Engineering Office Instructions:

1) Revision Incorporated into the Traveler: - Signature of the individual who incorporated the revision.

2) Process Engineering Final Review: - Review the Traveler or Document revised, sign and date the form. The original completed Revision Request Form will be retained by the Process Engineering Office in the Revision Request Binder.

Traveler Title:	Specification No:	Revision:	DR No:
LHC Q1 LMQXA Cold Mass Module Assembly Traveler	5520-TR-333754	None	HGQ-0435

Step No:	Drawing No:	Routing Form No:	Serial No:	Rework ID:
5.19	369894		LMQXA01	0

Discrepancy Description:

Instrumentation wire tube is located in the wrong location along with the warm-up heaters.

Originator: Steve Gould

Date: 10/28/2003

Cause of Nonconformance:

Error at installation.

Responsible Authority: Fred Nobrega

Date: 4/5/2004

Disposition:

Use as is.

Responsible Authority: Fred Nobrega

Date: 4/5/2004

Corrective Action to Prevent Recurrence:

Change design to reflect the errant installation and use for all future installations. No Traveler Change.

Responsible Authority: Fred Nobrega

Date: 4/5/2004

Corrective Action/Disposition Verified By: John Szostak

Date: 12/6/2004

Will Configuration be affected?: ☐ YES ☑ NO

Identified problem area:

☐ Material ☐ Manpower ☑ Method ☐ Machine ☐ Measurement

Reviewed By: Bob Jensen

Date: 12/6/2004

Traveler Title:	Specification No:	Revision:	DR No:
LHC Q1 LMQXA Cold Mass Module Assembly Traveler	5520-TR-333754	None	HGQ-0444

Step No:	Drawing No:	Routing Form No:	Serial No:	Rework ID:
6.1	369894		LMQXA01	0

Discrepancy Description:

Voltage tap EE1311(VTb1Q1) does not work.

DEC 6 2004

Originator: Steve Gould

Date: 1/29/2004

Cause of Nonconformance:

Unkown.

Responsible Authority: Fred Nobrega

Date: 4/5/2004

Disposition:

Track and fix.

Responsible Authority: Fred Nobrega

Date: 4/5/2004

Corrective Action to Prevent Recurrence:

None. No Traveler Change.

Responsible Authority: Fred Nobrega

Date: 4/5/2004

Corrective Action/Disposition Verified By: John Szostak

Date: 12/6/2004

Will Configuration be affected?: ☐ YES ☑ NO

Identified problem area:

☐ Material ☐ Manpower ☐ Method ☐ Machine ☑ Measurement

Reviewed By: Bob Jensen

Date: 12/6/2004

CERN LHC MQXA

Acceptance Test at FNAL

QUALITY RECORD

Cryogenics Science Center

KEK, High Energy Accelerator Research Organization

Magnet ID :_____

Date of approval :_____

Approved by :_____ (FNAL)

:_____ (KEK)

Ver. 0
Ver A (with initial results)
Ver B (with initial results)

1. Appearance Check

Procedure	Criteria
Check appearance of the magnet by visual inspection.	No harmful defects or deformation
Result at TOSHIBA	
Acceptable	
Result at FNAL	

2. Interface Dimensions

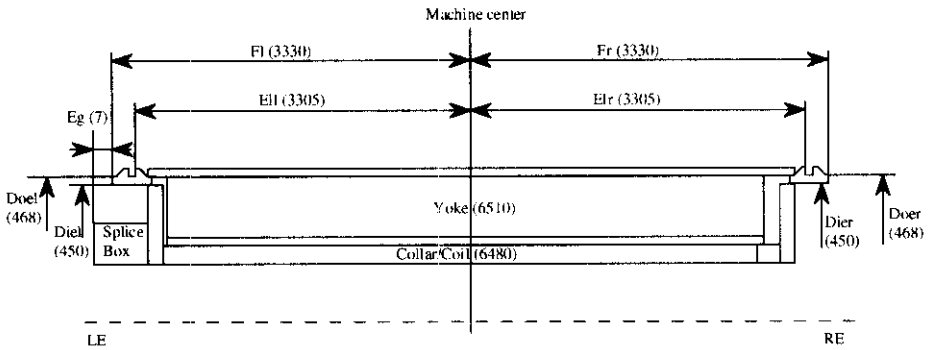

1) Dimensions	Unit:mm
Procedure	Criteria
1) Dimension Check Measure following dimensions a, b, c : Measuring range: every 45 deg. from 0 deg. d : Splice Box : four points	
a) Machine center - Interface	a) 3330 –6/+0
b) Interface outer diameter (Doel,Doer)	b) ϕ468 –4/+0
c) Interface inner diameter (Diel,Dier)	c) ϕ450 –4/+0
d) End Ring - Splice box(Eg)	d) 7 -5/+5

Result at TOSHIBA

Critera	3330 -6/+0		ϕ468 -4/+0		ϕ450 -4/+0		7
Position	Fl	Fr	Doel	Doer	Diel	Dier	Eg
0 deg.	3330.0	3330.0	467.33	467.77	448.66	449.14	2.01
45 deg.	3330.0	3330.0	467.47	466.83	448.92	448.84	
90 deg.	3330.0	3330.0	467.29	466.64	448.92	448.71	2.99
135 deg.	3330.0	3330.0	466.68	467.01	448.37	448.71	
180 deg.	3330.0	3330.0					3.03
225 deg.	3330.0	3330.0					
270 deg.	3330.0	3330.0					4.04
315 deg.	3330.0	3330.0					
Result	Acceptable		Acceptable		Acceptable		Acceptable

Result at FNAL

Critera	3330 -6/+0		ϕ468 -4/+0		ϕ450 -4/+0		7
Position	Fl	Fr	Doel	Doer	Diel	Dier	Eg
0 deg.	3329	3329	467.47	467.87	450.09	450.34	3
45 deg.			467.46	466.92	450.04	449.58	
90 deg.	3328	3329	467.28	466.55	449.63	449.05	3
135 deg.			466.73	466.98	449.30	449.58	
180 deg.	3328	3328					3
225 deg.							
270 deg.							4
315 deg.							
Result							

2) End ring interface		
Procedure		Criteria
Check the weld edge preparation using ϕ449 +0/-0.02 gauge.		1) The gauge shall be inserted into the end ring. 2) Measurement data will be reported if the gage cannot be inserted.
Measurement part	Result at TOSHIBA	Remarks
LE side	OK	------
RE side	NG	Measured Value : 22mm Gauge length : 29mm
Measurement part	Result at FNAL	Remarks
LE side		
RE side		

3) Radial envelope	
Procedure	Criteria
Check shell radial envelope using ϕ530mm gauge. (dummy cold-mass support)	The gauge shall pass the magnet.
Result at TOSHIBA	
Acceptable	
Result at FNAL	

4) Magnet bore	
Procedure	Criteria
Check appearance of the magnet bore by visual inspection.	No harmful defects or deformation
Result at TOSHIBA	
Acceptable	
Result at FNAL	

5) Magnet bus slot	
Procedure	Criteria
Check the bus slot using bus line model gauge.	The gauge shall pass the magnet bus slot.
Result at TOSHIBA	
Acceptable	
Result at FNAL	

6) Weight	
Procedure	Criteria
Measure the magnet weight.	Weight < 8500kg
Result at TOSHIBA	
8329kg	Acceptable
Result at FNAL	
8301kg	

7) Length of magnet lead, QPH wire, Voltage taps		
Procedure	Criteria	
Check the lengths of magnet lead, QPH wire, voltage taps.	1) Magnet lead : > 500mm from magnet LE end plate 2) Voltage taps wire : > 2000mm from magnet LE end plate 3) QPH wire : >2000mm from magnet LE end plate	
Result at TOSHIBA		
Measuring wire	Measured Value	Result
1) Magnet lead	> 500mm	Acceptable
2) Voltage taps	No.C2:1980mm, Other wires : >2000mm	Acceptable
3) QPH wire	> 2000mm	Acceptable
Result at FNAL		
Measuring wire	Measured Value	Result
1) Magnet lead	620mm	
2) Voltage taps	C2: 1965mm / others > 2000mm	
3) QPH wire	2340mm	

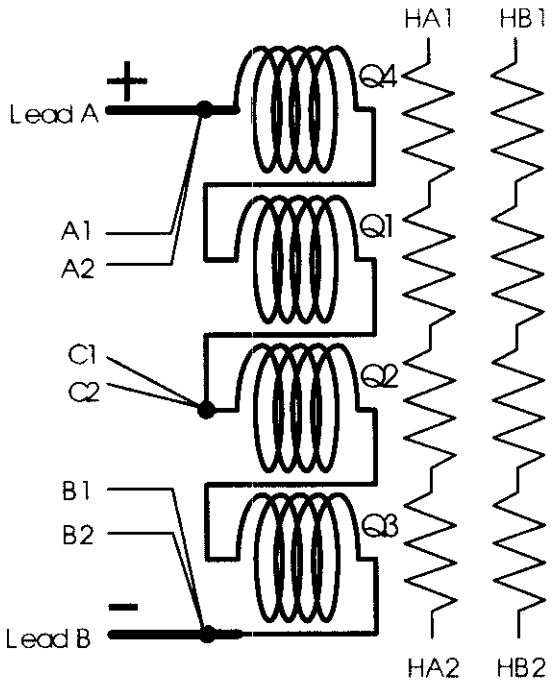

8) Cable tags	
Procedure	Criteria
Check the cable tags.	Consistent to the tag No. table.

Vtaps & QPH Tag No. table

Lead	Tag Name	Description
Voltage taps	A1, A2	Taps from A lead
	B1, B2	Taps from B lead
	C1, C2	Center taps
Quench heaters	HA1, HA2	Heater A
	HB1, HB2	Heater B

Result at TOSHIBA	
1)Voltage taps	Acceptable
2)Quench heaters	Acceptable
Result at FNAL	
1)Voltage taps	OK
2)Quench heaters	OK

3. Coil Resistance

Procedure	Criteria
Measure the magnet total resistance and coil temperature at coil current of DC1A. Calculate resistance at 20 °C; R_{20}. $R_{20}=V/I/(1+0.00393*(T_{coil}-20))$ V : Voltage between magnet leads (V) I : Coil current obtained by shut resistor (A) T_{coil} : coil temperature (°C)	1) Compare with R_{20} at TOSHIBA. Variation of R_{20} < 0.005 Ω 2) Voltage taps(C-A, C-B): Measurement Only

Result at TOSHIBA							
T_{coil}				Not Reported			
Magnet total voltage (V)		Current (A)		Magnet total resistance R_{20} (Ω)			
Not Reported		Not Reported		6.82906			
Voltage taps tag No.	V (V)	I (A)	R_{20} (Ω)	Voltage taps tag No.	V (V)	I (A)	R_{20} (Ω)
C1 - A1	Not Reported	Not Reported	3.41073	C2 - A1	Not Reported	Not Reported	3.41075
C1 - A2	Not Reported	Not Reported	3.41076	C2 - A2	Not Reported	Not Reported	3.41080
C1 - B1	Not Reported	Not Reported	3.41148	C2 - B1	Not Reported	Not Reported	3.41147
C1 - B2	Not Reported	Not Reported	3.41146	C2 - B2	Not Reported	Not Reported	3.41070
Acceptable							

Result at FNAL			
T_{coil}		21.7 C / 4[illegible]	
Magnet total voltage (V)	Current (A)	Magnet total resistance R / R_{20} (Ω)	Variation (Ω) ($R_{20\text{-}TOSHIBA}$ - $R_{20\text{-}FNAL}$)
	0.1 A	6.793 / 6.838	0.009
Voltage taps tag No.	R/ R_{20} (Ω)	Voltage taps tag No.	R/ R_{20} (Ω)
C1 - A1	3.397 / 3.4193	C2 - A1	3.396 / 3.4182
C1 - A2	3.396 / 3.4182	C2 - A2	3.395 / 3.4172
C1 - B1	3.396 / 3.4182	C2 - B1	3.396 / 3.4182
C1 - B2	3.396 / 3.4182	C2 - B2	3.396 / 3.4182

4. Instrumentations

1) Voltage taps

Procedure	Criteria
Check resistance of all voltage taps by four terminal method at 1A. Magnet lead : Q4 4th : + Magnet lead : Q3 3rd : -	Magnet lead + : A1, A2 (Pole4 Out) Magnet lead - : B1, B2 (Pole3 Out) Center taps : C1, C2 (Pole1 Out) Variation of R_{20}(A1),R_{20}(A2) : < 0.1% Variation of R_{20}(B1),R_{20}(B2) : < 0.1% Variation of R_{20}(C1),R_{20}(C2) : < 0.1%

Result at TOSHIBA

Voltage taps No.	Resistance(Ω)	Voltage taps No.	Resistance(Ω)	Variation(%)	Result
A1	0.00144	A2	0.00144	0.0	Acceptable
C1	3.41159	C2	3.41162	0.0	Acceptable
B1	6.82171	B2	6.82162	0.0	Acceptable

Result at FNAL

Voltage taps No.	Resistance(Ω)	Voltage taps No.	Resistance(Ω)	Variation(%)	Result
A1	0.00165	A2	0.00163	1.2 %	@ 1 A
C1	3.399	C2	3.399	0	@ 0.1 A
B1	6.795	B2	6.796	0.01 %	@0.1 A

2) QPH

Procedure	Criteria
Measure the resistance of QPH.	QPH resistance : 30 +4/-4Ω (HA,HB)

Result at TOSHIBA

QPH No.	QPH Resistance(Ω)	Result
HA	29.2	Acceptable
HB	29.2	Acceptable

Result at FNAL

QPH No.	QPH Resistance(Ω)	Result
HA	28.84	
HB	28.86	

5. Coil Inductance

Procedure	Criteria
Measure inductance of magnet at frequencies of 100Hz and 1kHz using LCR meter.	1) Variation of inductance Voltage taps No. C-A, inductance Voltage taps No. C-B : < 5% 2) Total inductance of the magnet :Measurement only

Result at TOSHIBA

Voltage taps tag No.	100Hz	Result (%)	1kHz	Result (%)	Voltage taps tag No.	100Hz	Result (%)	1kHz	Result (%)
C1 - A1	37.470	0.17	13.745	0.41	C2 - A1	37.470	0.16	13.745	0.41
C1 - A2	37.460		13.745		C2 - A2	37.470		13.745	
C1 - B1	37.530		13.802		C2 - B1	37.530		13.801	
C1 - B2	37.530		13.801		C2 - B2	37.530		13.802	

	100Hz	1kHz
Magnet	87.630	32.200

Acceptable

Result at FNAL

Voltage taps tag No.	100Hz	Result (%)	1kHz	Result (%)	Voltage taps tag No.	100Hz	Result (%)	1kHz	Result (%)
C1 - A1	37.52	0.16	13.83	0.36	C2 - A1	37.52	0.16	13.83	0.36
C1 - A2	37.52		13.83		C2 - A2	37.52		13.83	
C1 - B1	37.58		13.88		C2 - B1	37.58		13.88	
C1 - B2	37.58		13.88		C2 - B2	37.58		13.88	

	100Hz	1kHz
Magnet	87.79	32.60

6. Turn to Turn Insulation

Procedure	Criteria
Apply impulse voltage of 1000V between the magnet leads and record the signal. Instrumentation: Impulse generator, recorder	Compare the signal with one at KEK. Attach rthe chart.
Result at TOSHIBA	
Acceptable	See appendix
Result at FNAL	

7. Coil Insulation

1) Insulation Resistance			
Procedure		Criteria	
Apply 1kV-DC to the coil in 1 min. and measure insulation resistance by using insulation tester. High voltage : Coils Ground : Collar, Yoke, Shell, QPH		Insulation resistance > 100MΩ	
Result at TOSHIBA			
Temperature(°C)	Humidity(%)	Insulation(MΩ)	Result
20	31	> 2000	Acceptable
Result at FNAL			
Temperature(°C)	Humidity(%)	Insulation(MΩ)	Result
21.7	44	51 nA (>2000)	

2) Hi-pot test			
Procedure		Criteria	
Apply 3kV-DC to the coil in 1 min. and measure leak current or insulation resistance. High voltage : Coil Ground : Collar, Yoke, Shell, QPH		No break down Record leak current or resistance.	
Result at TOSHIBA			
Temperature (°C)	Humidity (%)	Leak current (mA)	Result
22	31	0.00	Acceptable
Result at FNAL			
Temperature (°C)	Humidity (%)	Leak current or resistance	Result
21.7	44	290 nA	

8. QPH Insulation

1) Insulation Resistance				
Procedure			Criteria	
Apply 1kV-DC to the QPH in 1 min. and measure insulation resistance by using insulation tester. High voltage : QPH Ground : Coil, Collar, Yoke, Shell			Insulation resistance > 100MΩ	
Result at TOSHIBA				
Heater No.	Temperature (°C)	Humidity (%)	Insulation(MΩ)	Result
HA	22	31	> 2000	Acceptable
HB			> 2000	Acceptable
Result at FNAL				
Heater No.	Temperature (°C)	Humidity (%)	Insulation(MΩ)	Result
HA	21.7	44	573 nA / 1242	
HB			357 nA / 2800	

2) Hi-pot test				
Procedure			Criteria	
Apply 3kV-DC to the QPH in 1 min. and measure leak current or insulation resistance. High voltage : QPH Ground : Coil, Collar, Yoke, Shell			No break down Record leak current or resistance.	
Result at TOSHIBA				
Heater No.	Temperature (°C)	Humidity (%)	Leak current (mA)	Result
HA	22	31	0.01	Acceptable
HB			0.01	Acceptable
Result at FNAL				
Heater No.	Temperature (°C)	Humidity (%)	Leak current or resistance	Result
HA	21.7	44	525 nA	
HB			169 nA	

9. QPH Discharge Test

1) Appearance check	
Procedure	Criteria
Check appearance of QPH wires by visual inspection.	No harmful defects or deformation.
Result at TOSHIBA	
Acceptable	
Result at FNAL	

2) QPH discharge test		
Procedure		Criteria
Charge the power supply above 850 V and fire QPHs.		No strange signal observed. Attach the chart.
Result at TOSHIBA		
HA	Acceptable	See appendix
HB	Acceptable	See appendix

3) QPH resistance				
Procedure		Criteria		
Measure resistance before/after the discharge test.		Resistance change < 10%		
Result at TOSHIBA				
QPH No.	Before (Ω)	After (Ω)	Variation (%)	Result
HA	29.3	29.3	0.0	Acceptable
HB	29.3	29.3	0.0	Acceptable
Result at FNAL				
QPH No.	Before (Ω)	After (Ω)	Variation (%)	Result
HA	28.84	29.5	2.3	
HB	28.86	29.6	2.5	

CERN
CH-1211 Geneva 23
Switzerland

the **Large Hadron Collider** project

LHC ICP Document No.
LHC-MCBX-FR-0001 rev. **1.0**

EDMS Document No.
———

Certificate of Conformity

Part name:	MCBX Inner Triplet Dipole Corrector		
LHC Identification No.:	HCMCBX_001-SI000003	***Serial No.:***	HCMCBX_001-SI000003
Shipped To:	CERN	***Shipment No:***	***02***
		Shipment	***31/03/03***
Manufacturer:	SIGMAPHI	***Contract No.:***	F375/LHC/LHC
Related tech. Specification:	LHC-MCBX-CI-0001 and addenda		
Related drawings:	LHCMCBX_0012 (1525-CN-1001)		
Responsible person at CERN:	Mikko Karppinen	***Tel.***	+41 22 767 4305
		E-mail.	Mikko.Karppinen@cern.ch
Responsible person at SIGMAPHI:	Damien Neuvéglise	***Tel.***	+33 2 97 01 08 80
		E-mail.	dneuveglise@sigmaphi.fr
SIGMAPHI certifies that the delivered material conforms to the technical specification mentioned above:			
Date: 04/04/03	***Name: D.Neuvéglise***		***Signature: D.Neuvéglise***

Acceptance test results

		MCBXV (Inner)	***MCBXH (Outer)***	***Remarks:***
RT dc resistance (Ω):	***SIGMAPHI:***	***18***	***21.8***	
	CERN:	***18.09***	***22.05***	
	CMA:	17.81 Ω	21.72 Ω	
Inductance @1 kHz/100 Hz (mH)	***SIGMAPHI:***	***66.48 / 113.22***	***68.4 / 161.14***	
	CERN	***63.39 / 84.72***	***59.25 / 98.30***	
	CMA:	63,3984 Ω	59.252 mH	INNER 4.39 / OUTER 2.50 Q
R.T. leakage current to ground @ 1.5 kV (μA):	***SIGMAPHI:***	***OK***	***OK***	
	CERN:	***0.009***	***0.005***	
	CMA:	8nA	4nA	

	Cold Mass Assembler
Visual inspection	
Name / Signature	[illegible] Bica [illegible]
Date	4-14-05

Accepted: ☑

Rejected: ☐

Comments (SigmaPhi):	

Comments (CERN):	***This is the first MCBX assembly with vacuum impregnated coil assemblies.***
	Bloc number 3 of inner coil has partly moved into the aperture
	During cold tests both dipoles reached 700 A in individual powering, however the combined powering was limited to 75 % of the nominal current (geometric sum).
	This magnet can be used only in Q1 cold mass.

Comments (CMA):	

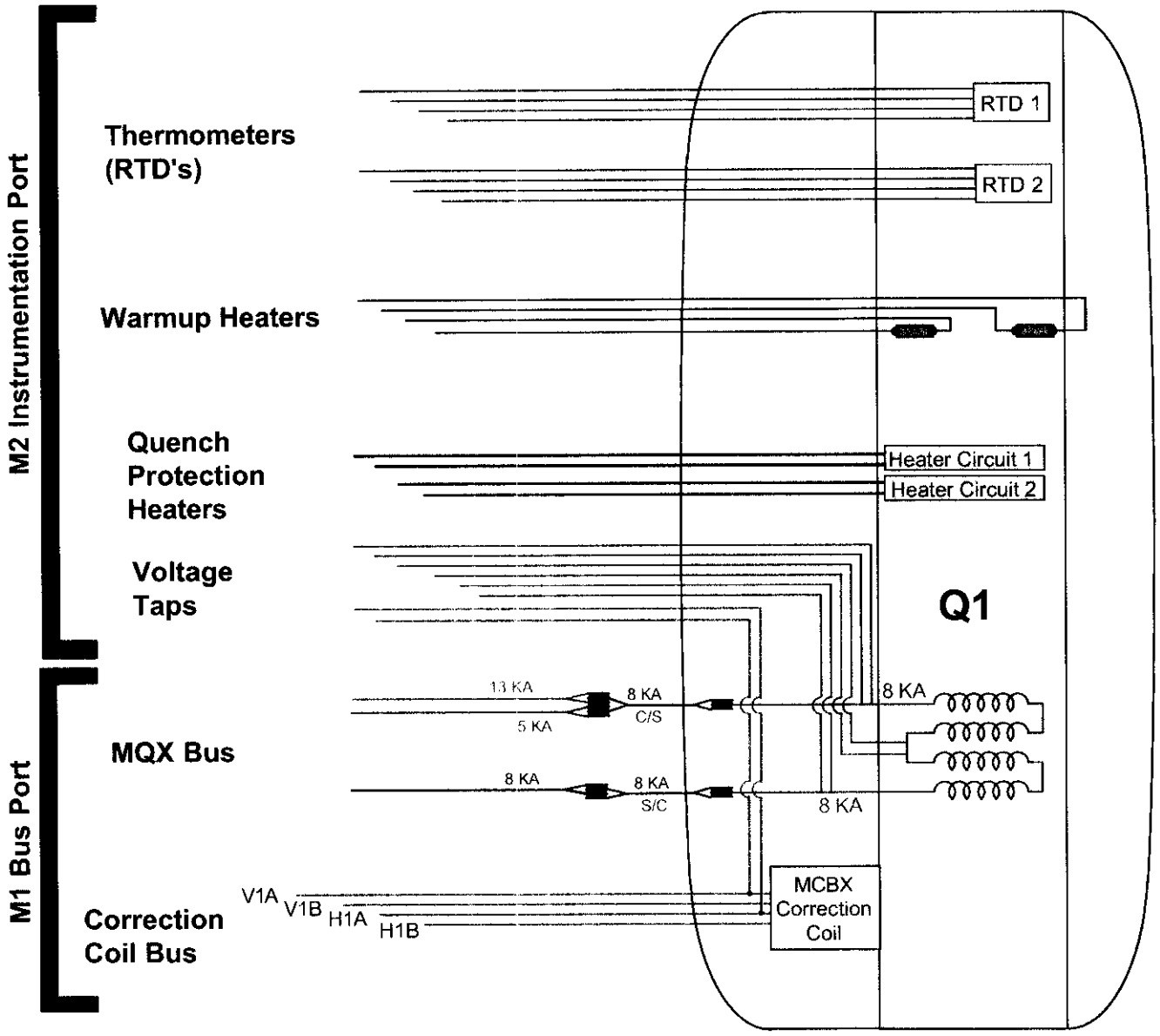

Wiring Schematic for Q1

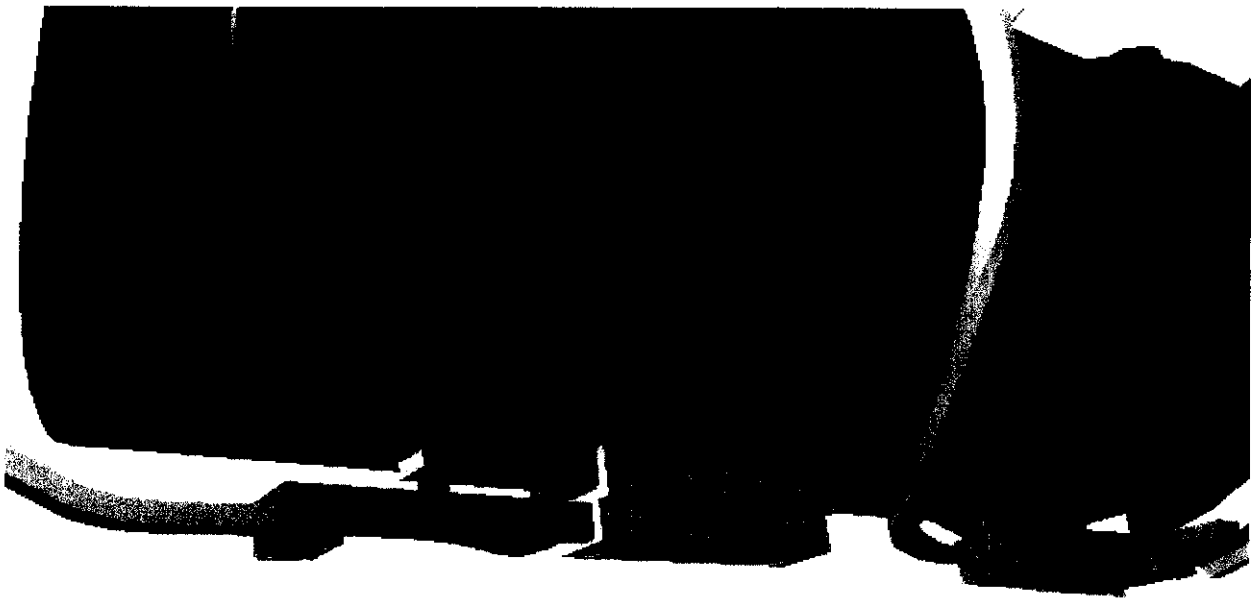

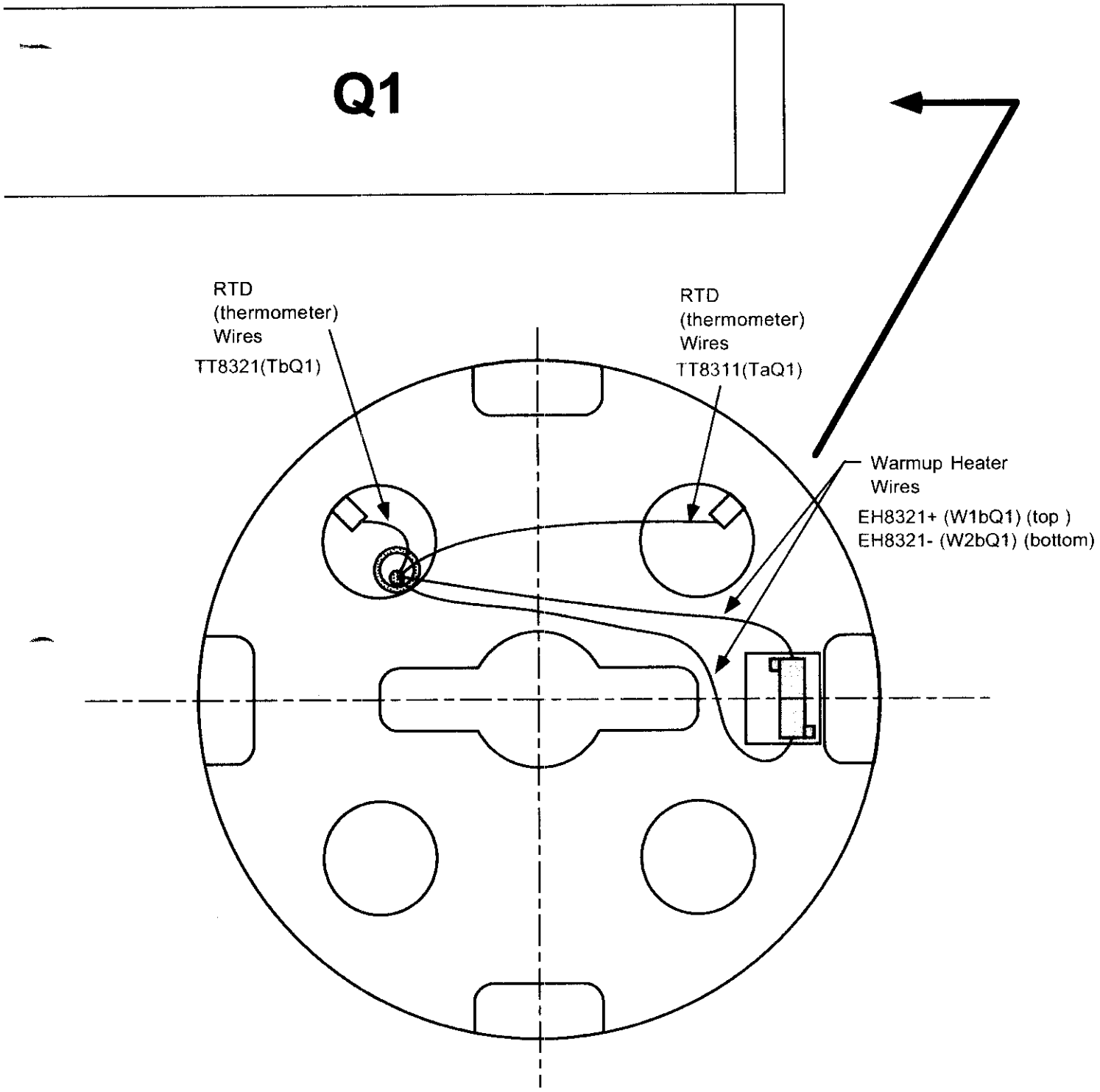

Looking at Non-lead End of Q1

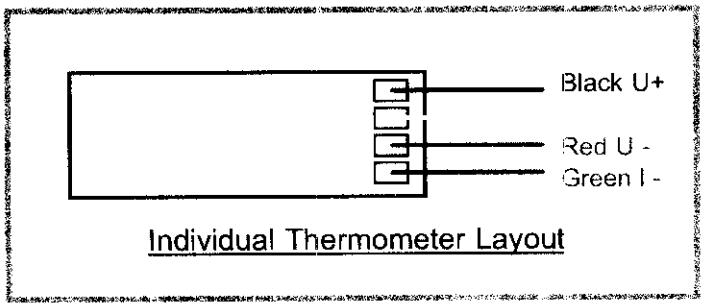

Q1 Wiring System

R. Bossert 10-21-2003

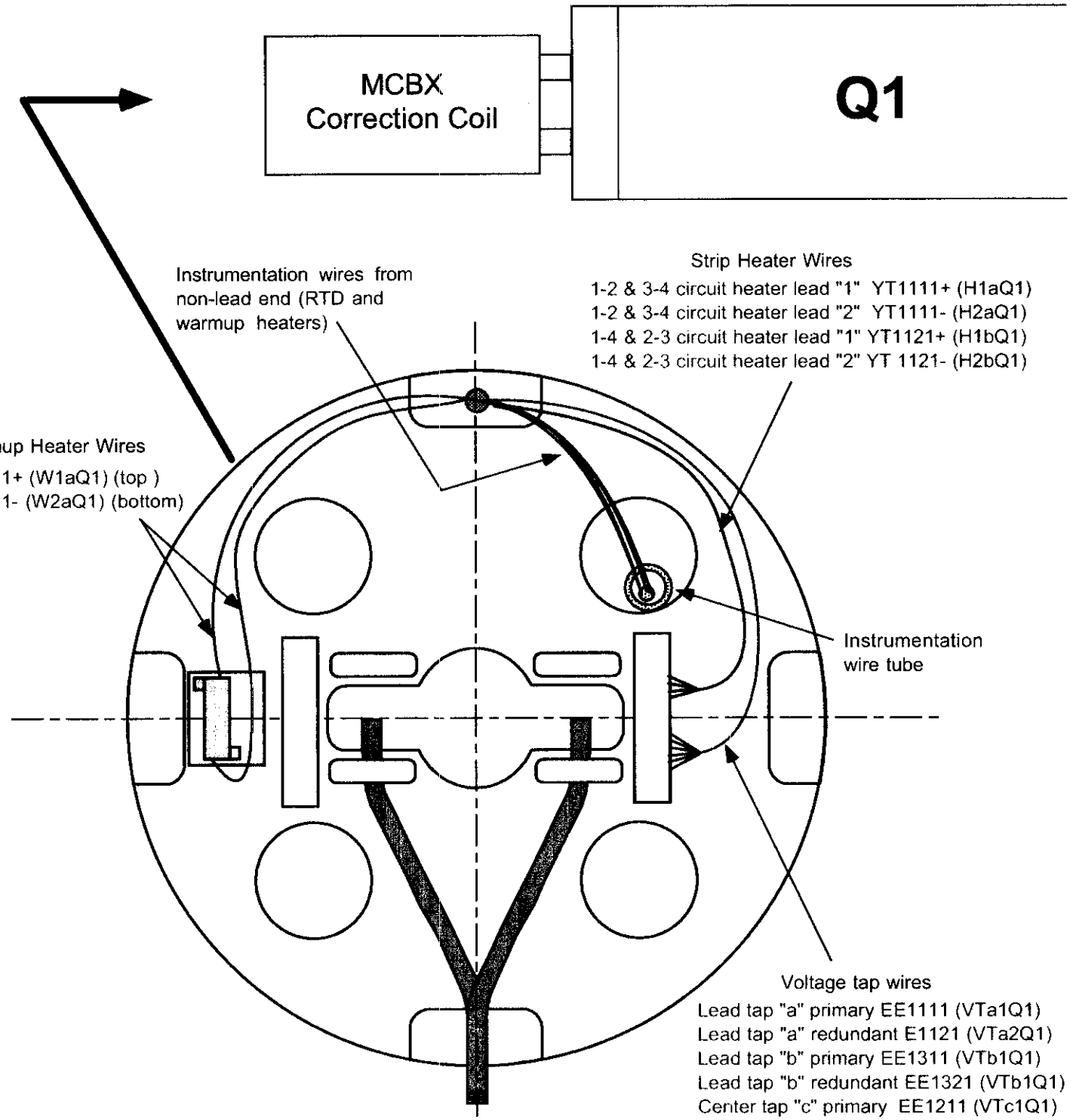

Looking at Lead End of Q1

Q1 Wiring System

R. Bossert 10-21-2003

Note: corrector tap wires are not shown. They will be installed after MCBX correction coil is mounted.
Corrector Q1H1 voltage tap EE8121 (VTH1)
Corrector Q1V1 voltage tap EE8111 (VTV1)

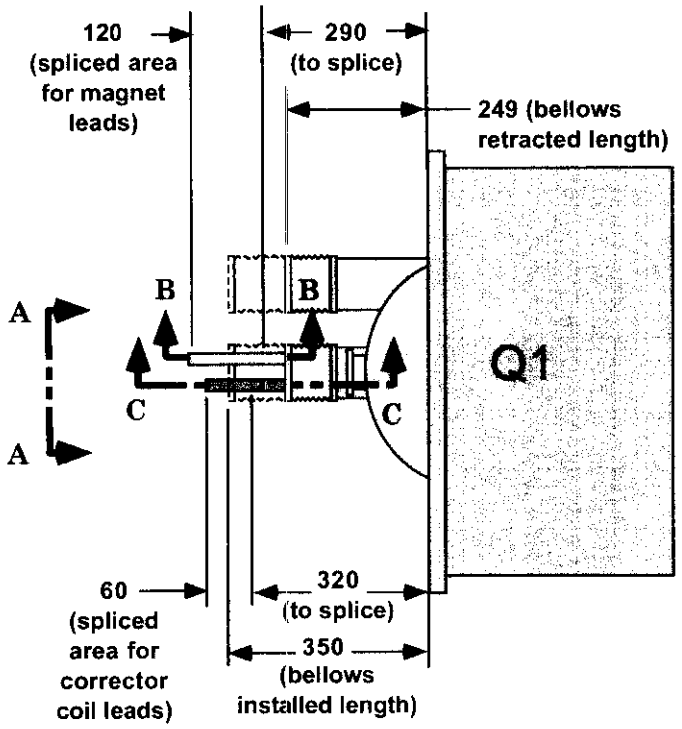

Top (plan) view of non-IP end of Q1

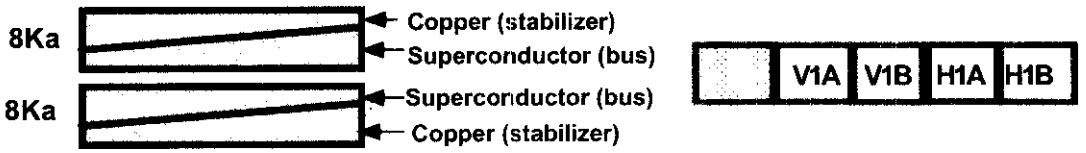

View A-A (Q1 Lead Configuration)

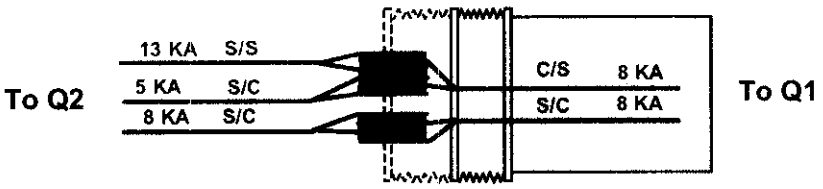

Section B-B (Magnet Lead Configuration)

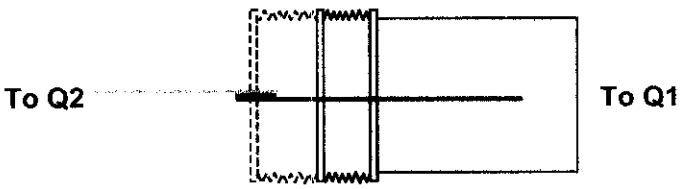

Section C-C (Corrector Bus Lead Configuration)

Q1 Electrical

8.0 Electrical Inspection

8.1 Perform an electrical inspection on each of the Individual Quadrants and the Cold Masses. Refer to the Valhalla and Leader Free Standing Coil Measurement Procedure (ES-292306).

INSERT PICTURE

(Q1) Resistance				Nominal ~ to mΩ
Voltage Tap Serial Numbers				Total Resistance
Connect	Fermi	CERN	KEK	
V_{HI}	VTa1Q1	EE1111	a1	.3423 mΩ
V_{LO}	VTc1Q1	EE1211	c1	
V_{HI}	VTc1Q1	EE1211	c1	.3406 mΩ
V_{LO}	VTb1Q1	EE1311	b1	

(TAKEN USING B2)

V_{HI}	VTa1Q1	EE1111	a1	Nominal ~ Ω
V_{LO}	VTb1Q1	EE1311	b1	.6810 Ω

(TAKEN USING B2)

Technician(s) Date 1-28-09

Check resistance of Redundant Voltage Taps.

Q1 Redundant Voltage Taps				
Connect	Fermi	CERN	KEK	Resistance
V_{HI}	VTa2Q1	EE1121	a2	.3405 Ω
V_{LO}	VTc2Q1	EE1221	c2	
V_{HI}	VTc2Q1	EE1221	c2	.3405 Ω
V_{LO}	VTb2Q1	EE1321	b2	

Technician(s) Date 1-28-09

LMQXA01

INSERT PICTURE

(Q1) Inductance				Nominal ~ to mH
Voltage Tap Serial Numbers				Total Inductance
Connect	Fermi	CERN	KEK	
H_{POT}	VTa1Q1	EE1111	a1	15.992 mH
L_{POT}	VTc1Q1	EE1211	c1	
H_{POT}	VTc1Q1	EE1211	c1	15.002 mH
L_{POT}	VTb1Q1	EE1311	b1	

H_{POT}	VTa1Q1	EE1111	a1	Nominal ~ H
L_{POT}	VTb1Q1	EE1311	b1	32.012

(Q1) Q-Factor				Nominal ~ to
Voltage Tap Serial Numbers				Total Q
Connect	Fermi	CERN	KEK	
H_{POT}	VTa1Q1	EE1111	a1	1.1
L_{POT}	VTc1Q1	EE1211	c1	
H_{POT}	VTc1Q1	EE1211	c1	1.1
L_{POT}	VTb1Q1	EE1311	b1	

H_{POT}	VTa1Q1	EE1111	a1	Nominal ~
L_{POT}	VTb1Q1	EE1311	b1	1.1

Technician(s)

1-28-09
Date

Insert Picture

LMQXA01

70°

Q1 - RTD's and Cryogenic (warm-up) Heaters			
Temperature of Building (+/- 5°): _____			
Component	**Fermi**	**CERN**	**Resistance**
Q1 RTD, primary 116839	TaQ1	TT8311	66.656 Ω
Q1 RTD, redundant	TbQ1	TT8321	73.553 Ω
Q1 Cryogenic (warm-up) Heater (LE) - wire at top (CERN #1 I+)	W1aQ1	EH8311+	16.08 Ω
Q1 Cryogenic (warm-up) Heater (LE) - wire at bottom (CERN #1 I-)	W2aQ1	EH8311-	
Q1 Cryogenic (warm-up) Heater (Non-LE) - wire at top (CERN #2 I+)	W1bQ1	EH8321+	16.45 Ω
Q1 Cryogenic (warm-up) Heater (Non-LE) - wire at bottom (CERN #2 I-)	W2bQ1	EH8321-	

Technician(s) _____ Date 1-28-04

Using the Hewlett Packard HP3457A digital multimeter, measure the Protection (Strip) Heater Resistance for Q1.

Q1 Protection (Strip) Heater Resistance					
Fermi	**CERN**	**KEK**	**Description**	**Limit**	**Resistance**
H1aQ1	YT1111+	HA1	Circuit A	28.81 Ω →	Ω
H2aQ1	YT1111-	HA2			
H1bQ1	YT1121+	HB1	Circuit B	29.82 Ω →	Ω
H2bQ1	YT1121-	HB2			

Technician(s) _____ Date 1-28-04

LMQXA01

8.2 Using the HP3457A, connect power thru the connector Power Leads (HA1 and HB1 to measure Q1-H1 or VA1 and VB1 to measure Q1-V1). Connect the Sense Leads as shown in table below and record resistance.

Insert Picture

MCBX Corrector Coil Taps			
Component	**FermiLab Label**	**CERN Label**	**Resistance**
Q1-H1	**VTH1**	**EE8121**	21.69 Ω
	HA1	**N/A**	
Q1-V1	**VTV1**	**EE8111**	17.75 Ω
	VA1	**N/A**	

Technician(s) _____ Date 1-28-04

XXX 8.3 Hipot according to table below. Hipot to 5kV. Maximum leakage is 3μA.

Hipot Heaters to Coil and Ground.

High Potential	Grounded	Floating	Leakage
All Strip Heaters	Coils, Yoke, Q1 Instrumentation Bus, Lead and Corrector Coil Busses, RTD's and Warm-up Heaters	Nothing	

Hipot Coil to Heaters and Ground.

High Potential	Grounded	Floating	Leakage
All Coils	Strip Heaters, Yoke, Q1 Instrumentation Bus, 8kA and 5kA Lead Busses and Corrector Coil Busses, RTD's and Warm-up Heaters	Nothing	

Don in travel

Technician(s) _____ Date _____

Responsible Authority/Physicist _____ Date _____

LMQXA01

8.0 Final Electrical Inspection (Replaces Old Electrical Step 11.0)

8.1 Perform an electrical inspection on each of the Individual Quadrants and the Cold Mass. Refer to the Valhalla and Leader Free Standing Coil Measurement Procedure (ES-292306).

To measure the Resistance of a Q1 Cold Mass:

1. Use Valhalla Scientific 4300B digital micro-ohmmeter.
2. Set Test Current to 1 amp.
3. Set Scale to 2V full scale.
4. Turn temperature compensation on.
5. Turn test current off.
6. Connect I_{HI} to Q4 inner power lead as shown in figure.
7. Connect I_{LO} to Q3 inner power lead as shown in figure.
8. Turn test current on.
9. Connect V_{HI} and V_{LO} to voltage taps as shown in resistance table.
10. To measure Total with leads, connect V_{HI} to Q4 power lead and V_{LO} to Q3 power lead.
11. Read resistance and record in traveler.

Q1 Cold Mass Electrical Measurements

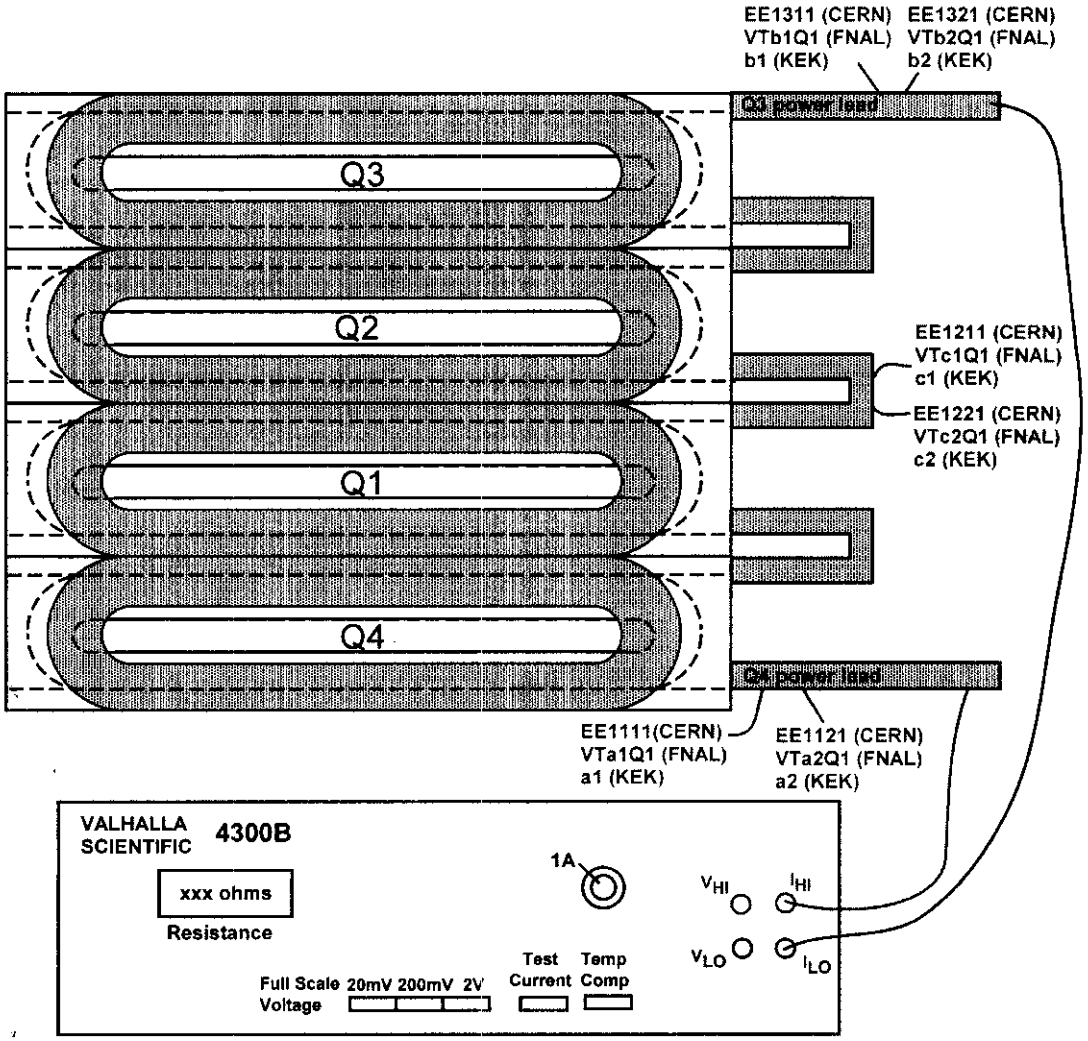

(Q1) Resistance				Nominal to Ω
Voltage Tap Serial Numbers				Total Resistance
Connect	Fermi	CERN	KEK	
V_{HI}	VTa1Q1	EE1111	a1	.3396 Ω
V_{LO}	VTc1Q1	EE1211	c1	
V_{HI}	VTc1Q1	EE1211	c1	.3396 Ω
V_{LO}	VTb1Q1	EE1311	b1	
V_{HI}	VTa1Q1	EE1111	a1	.6792 Ω
V_{LO}	VTb1Q1	EE1311	b1	
				Total Resistance with Leads
V_{HI}	Q4 Power Lead			.6796 Ω
V_{LO}	Q3 Power Lead			

Technician(s) _____ Date 2/10/04

Check resistance of Redundant Voltage Taps.

Q1 Redundant Voltage Taps				
Connect	Fermi	CERN	KEK	Resistance
V_{HI}	VTa2Q1	EE1121	a2	.3396 Ω
V_{LO}	VTc2Q1	EE1221	c2	
V_{HI}	VTc2Q1	EE1221	c2	.6793 Ω
V_{LO}	VTb2Q1	EE1321	b2	

Technician(s) _____ Date 2/10/04

To measure Ls and Q of a Q1 Cold Mass:

1. Use Hewlett Packard HP4284A digital LCR meter.
2. Turn line switch to on. The words "Measurement Display" should now be highlighted in the upper left corner of the display screen.
3. Use cursor buttons (shown in figure with arrows) to toggle down until "function" is highlighted near the upper left corner of the display screen.
4. Push the lowest of the five buttons to the right of display 3 times. (this button is shaded gray in the figure) The line in the display screen next to the second button down should now read "Ls-Q" and "function" near the upper left corner of the display should have the option "Ls-Q" chosen.
5. Scroll to "integer" using the cursor buttons. "Integer" will have the option "medium" chosen.
6. Press the 3rd button of five. The word "medium" should change to "long".
7. Connect H_{cur} to Q4 power lead as shown in figure.
8. Connect L_{cur} to Q3 power lead as shown in figure.
9. Connect H_{pot} and L_{pot} to voltage taps as shown in table.
10. Read Ls and Q from display and record in traveler.

Q1 Cold Mass Electrical Measurements

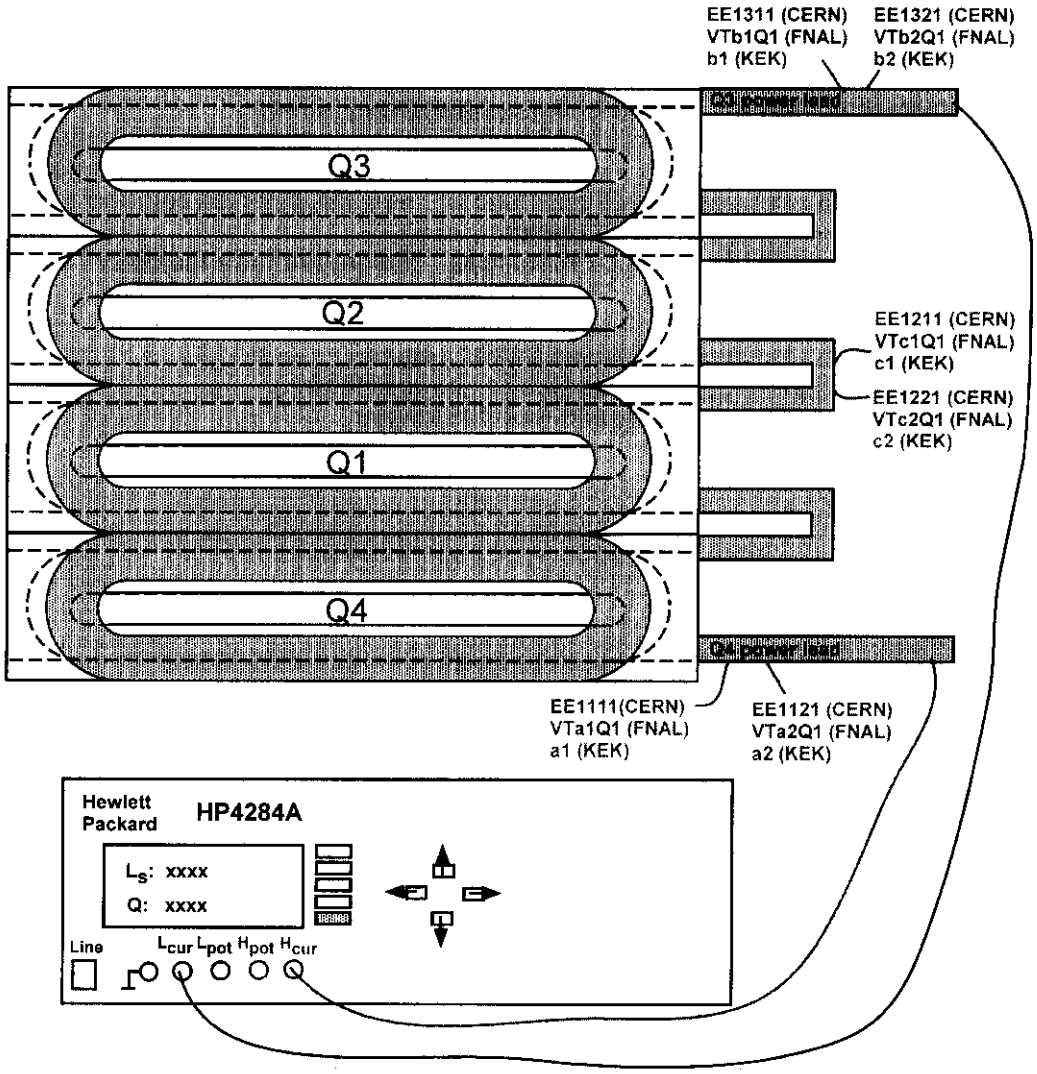

(Q1) Inductance				Nominal ~ to mH
Voltage Tap Serial Numbers				Total Inductance
Connect	Fermi	CERN	KEK	
H_{POT}	VTa1Q1	EE1111	a1	15.991 mH
L_{POT}	VTc1Q1	EE1211	c1	
H_{POT}	VTc1Q1	EE1211	c1	16.025 mH
L_{POT}	VTb1Q1	EE1311	b1	
H_{POT}	VTa1Q1	EE1111	a1	32.008 H
L_{POT}	VTb1Q1	EE1311	b1	

(Q1) Q-Factor				Nominal ~ to
Voltage Tap Serial Numbers				Total Q
Connect	Fermi	CERN	KEK	
H_{POT}	VTa1Q1	EE1111	a1	1.1
L_{POT}	VTc1Q1	EE1211	c1	
H_{POT}	VTc1Q1	EE1211	c1	1.1
L_{POT}	VTb1Q1	EE1311	b1	
H_{POT}	VTa1Q1	EE1111	a1	1.1
L_{POT}	VTb1Q1	EE1311	b1	

Technician(s)

Date 2/10/04

To measure the resistance of a Thermometer (RTD):

1. Use Hewlett Packard HP3457A digital multimeter.
2. Record temperature of building within +/- 5 degrees.
3. Press line button to turn line on.
4. Connect wires as shown in Figure below.
   U+ (Black) to Sense HI
   I+ (Yellow) to Input HI
   U- (Red) to Sense LO
   I- (Green) to Input LO
5. Push blue button (function key) once.
6. Push OHMF button.
7. Verify arrow in readout is above the 4WΩ (meaning a 4 wire resistance measurement).
8. Read resistance in ohms and record in traveler.

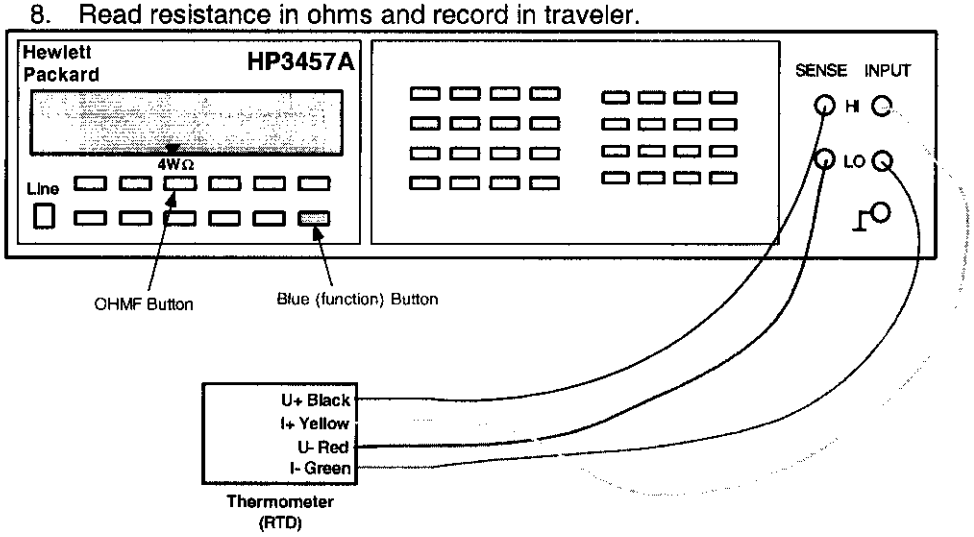

To measure the resistance of a Cryogenic (Warm-up) Heater

1. Use Hewlett Packard HP3457A digital multimeter.
2. Record temperature of building within +/- 5 degrees.
3. Press line button to turn line on.
4. Connect wires as shown in Figure below.
5. Push blue button (function key) once.
6. Push OHMF button.
7. Verify arrow in readout is above the 4WΩ (meaning a 4 wire resistance measurement).
   Note: Although this is technically a 4 wire measurement, it is effectively a 2 wire measurement, since there are only 2 wires connected to each heater.
8. Read resistance in ohms and record in traveler.

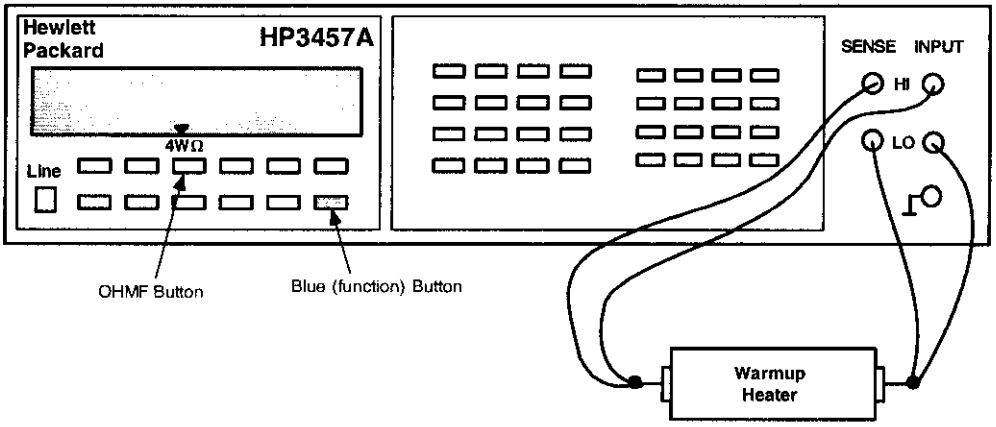

Q1 - RTD's and Cryogenic (warm-up) Heaters			
Component	**Fermi**	**CERN**	**Resistance**
Q1 RTD, primary	TaQ1	TT8311	73.502 Ω
Q1 RTD, redundant	TbQ1	TT8321	66.591 Ω
Q1 Cryogenic (warm-up) Heater (LE) - wire at top (CERN #1 I+)	W1aQ1	EH8311+	16.2044 Ω
Q1 Cryogenic (warm-up) Heater (LE) - wire at bottom (CERN #1 I-)	W2aQ1	EH8311-	
Q1 Cryogenic (warm-up) Heater (Non-LE) - wire at top (CERN #2 I+)	W1bQ1	EH8321+	16.5647 Ω
Q1 Cryogenic (warm-up) Heater (Non-LE) - wire at bottom (CERN #2 I-)	W2bQ1	EH8321-	

Technician(s) _____ Date 2/10/04

Using the Hewlett Packard HP3457A digital multimeter, measure the Protection (Strip) Heater Resistance for Q1.

Q1 Protection (Strip) Heater Resistance					
Fermi	**CERN**	**KEK**	**Description**	**Limit**	**Resistance**
H1aQ1	**YT1111+**	**HA1**	**Circuit A**	Ω	29.0883 Ω
H2aQ1	**YT1111-**	**HA2**			
H1bQ1	**YT1121+**	**HB1**	**Circuit B**	Ω	29.098 Ω
H2bQ1	**YT1121-**	**HB2**			

Technician(s) _____ Date 2/10/04

8.2 Using the HP4284A, connect power thru the corrector Power Leads (HA1 and HB1 to measure Q1-H1 or VA1 and VB1 to measure Q1-V1). Connect the Sense Leads as shown in table below and record resistance.

MCBX Corrector Coil Taps			
Component	**FermiLab Label**	**CERN Label**	**Resistance**
Q1-H1	**VTH1**	**EE8121**	21.907 Ω
	HA1	**N/A**	
Q1-V1	**VTV1**	**EE8111**	18.0426 Ω
	VA1	**N/A**	

Technician(s) 2/10/04 Date

XXX 8.3 Hipot according to table below. Hipot to 3kV. Maximum leakage is 3μA.

Hipot Heaters to Coil and Ground.

High Potential	Grounded	Floating	Leakage
All Strip Heaters	Coils, Yoke, Q1 Instrumentation Bus, Lead and Corrector Coil Busses, RTD's and Warm-up Heaters	Nothing	.138uA

Hipot Coil to Heaters and Ground.

High Potential	Grounded	Floating	Leakage
All Coils	Strip Heaters, Yoke, Q1 Instrumentation Bus, 8kA and 5kA Lead Busses and Corrector Coil Busses, RTD's and Warm-up Heaters	Nothing	.327uA

Technician(s) 2/11/04 Date

Responsible Authority/Physicist 2/11/04 Date

13.0 Final Electrical Inspection

13.1 Perform an electrical inspection on each of the Individual Quadrants and the Cold Mass. Refer to the Valhalla and Leader Free Standing Coil Measurement Procedure (ES-292306).

To measure the Resistance of a Q1 Cold Mass:

1. Use Valhalla Scientific 4300B digital micro-ohmmeter.
2. Set Test Current to 1 amp.
3. Set Scale to 2V full scale.
4. Turn temperature compensation on.
5. Turn test current off.
6. Connect I_{HI} to Q4 inner power lead as shown in figure.
7. Connect I_{LO} to Q3 inner power lead as shown in figure.
8. Turn test current on.
9. Connect V_{HI} and V_{LO} to voltage taps as shown in resistance table.
10. To measure Total with leads, connect V_{HI} to Q4 power lead and V_{LO} to Q3 power lead.
11. Read resistance and record in traveler.

Q1 Cold Mass Electrical Measurements

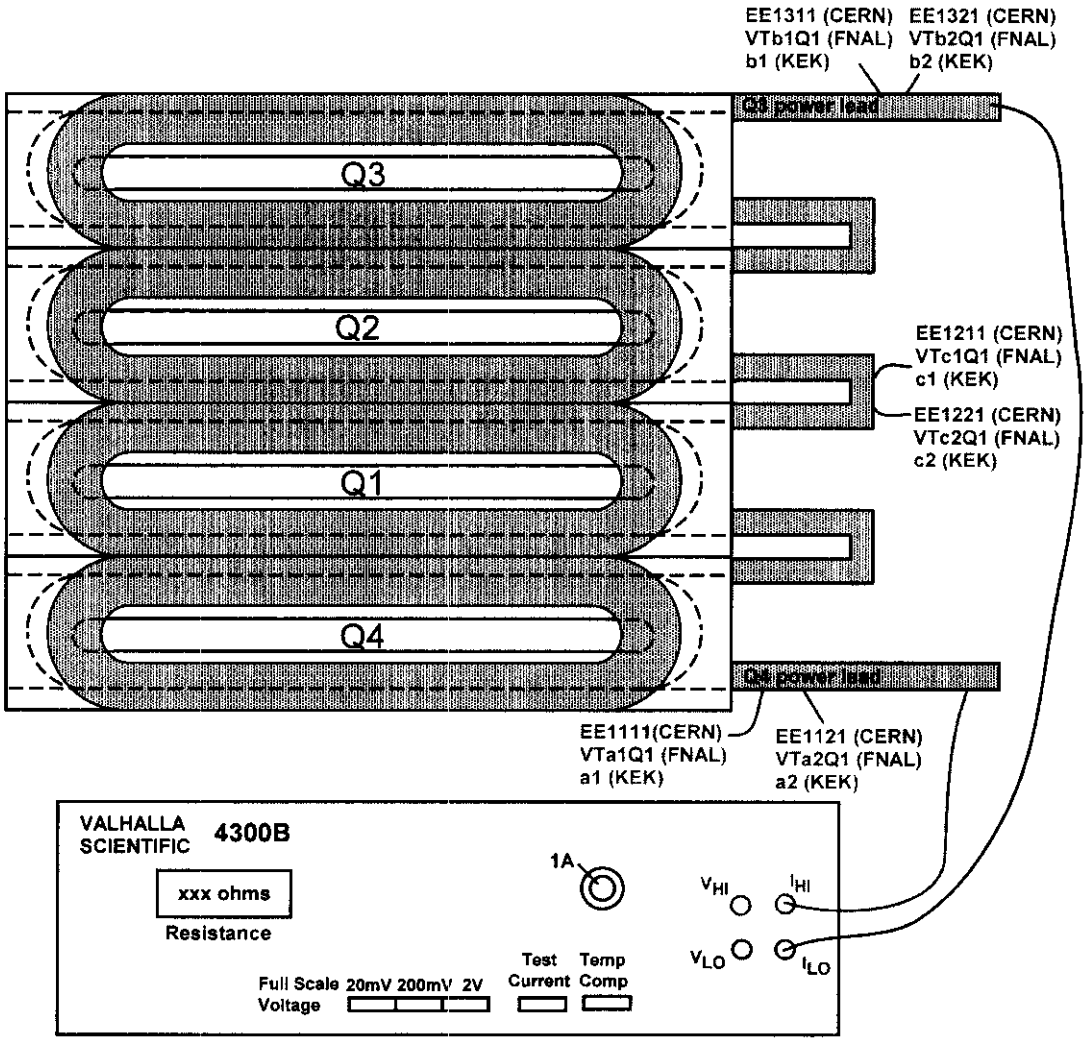

(Q1) Resistance				Nominal to Ω
Voltage Tap Serial Numbers				Total Resistance
Connect	Fermi	CERN	KEK	
V_{HI}	VTa1Q1	EE1111	a1	.3415 Ω
V_{LO}	VTc1Q1	EE1211	c1	
V_{HI}	VTc1Q1	EE1211	c1	.3415 Ω
V_{LO}	VTb1Q1	EE1311	b1	
V_{HI}	VTa1Q1	EE1111	a1	.6829 Ω
V_{LO}	VTb1Q1	EE1311	b1	
				Total Resistance with Leads
V_{HI}	Q4 Power Lead			.6833 Ω
V_{LO}	Q3 Power Lead			

Technician(s) Date 2-12-04

Check resistance of Redundant Voltage Taps.

Q1 Redundant Voltage Taps				
Connect	Fermi	CERN	KEK	Resistance
V_{HI}	VTa2Q1	EE1121	a2	.3415 Ω
V_{LO}	VTc2Q1	EE1221	c2	
V_{HI}	VTc2Q1	EE1221	c2	.3416 Ω
V_{LO}	VTb2Q1	EE1321	b2	

Technician(s) Date 2-12-04

To measure Ls and Q of a Q1 Cold Mass:

1. Use Hewlett Packard HP4284A digital LCR meter.
2. Turn line switch to on. The words "Measurement Display" should now be highlighted in the upper left corner of the display screen.
3. Use cursor buttons (shown in figure with arrows) to toggle down until "function" is highlighted near the upper left corner of the display screen.
4. Push the lowest of the five buttons to the right of display 3 times. (this button is shaded gray in the figure) The line in the display screen next to the second button down should now read "Ls-Q" and "function" near the upper left corner of the display should have the option "Ls-Q" chosen.
5. Scroll to "integer" using the cursor buttons. "Integer" will have the option "medium" chosen.
6. Press the 3rd button of five. The word "medium" should change to "long".
7. Connect H_{cur} to Q4 power lead as shown in figure.
8. Connect L_{cur} to Q3 power lead as shown in figure.
9. Connect H_{pot} and L_{pot} to voltage taps as shown in table.
10. Read Ls and Q from display and record in traveler.

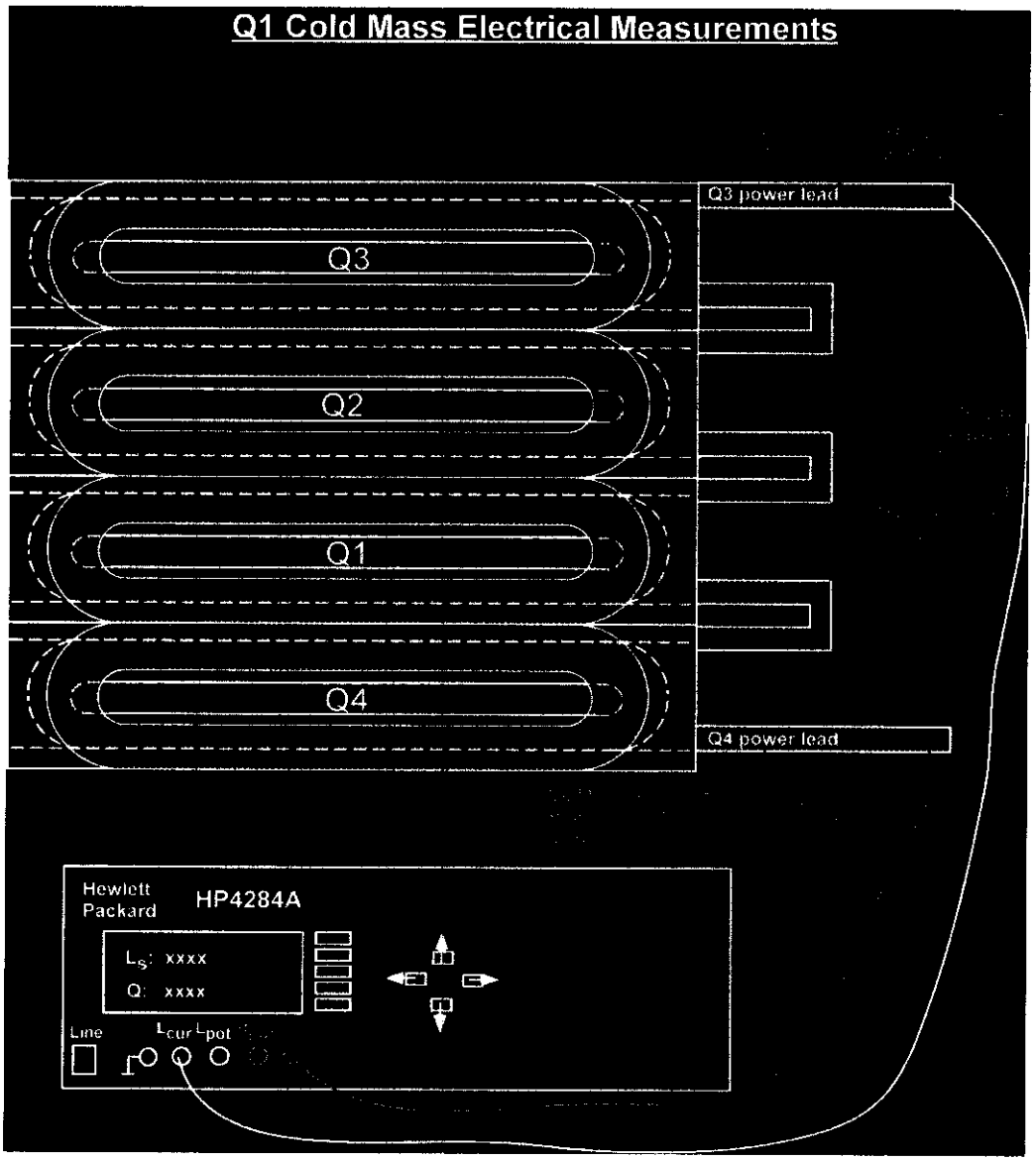

(Q1) Inductance				Nominal ~ to mH
Voltage Tap Serial Numbers				Total Inductance
Connect	Fermi	CERN	KEK	
H_{POT}	VTa1Q1	EE1111	a1	15.982 mH
L_{POT}	VTc1Q1	EE1211	c1	
H_{POT}	VTc1Q1	EE1211	c1	16.020 mH
L_{POT}	VTb1Q1	EE1311	b1	

H_{POT}	VTa1Q1	EE1111	a1	31.996 H
L_{POT}	VTb1Q1	EE1311	b1	

(Q1) Q-Factor				Nominal ~ to
Voltage Tap Serial Numbers				Total Q
Connect	Fermi	CERN	KEK	
H_{POT}	VTa1Q1	EE1111	a1	1.1
L_{POT}	VTc1Q1	EE1211	c1	
H_{POT}	VTc1Q1	EE1211	c1	1.1
L_{POT}	VTb1Q1	EE1311	b1	

H_{POT}	VTa1Q1	EE1111	a1	1.1
L_{POT}	VTb1Q1	EE1311	b1	

Technician(s)

2-12-04
Date

To measure the resistance of a Thermometer (RTD):

1. Use Hewlett Packard HP3457A digital multimeter.
2. Record temperature of building within +/- 5 degrees.
3. Press line button to turn line on.
4. Connect wires as shown in Figure below.
   U+ (Black) to Sense HI
   I+ (Yellow) to Input HI
   U- (Red) to Sense LO
   I- (Green) to Input LO
5. Push blue button (function key) once.
6. Push OHMF button.
7. Verify arrow in readout is above the 4WΩ (meaning a 4 wire resistance measurement).
8. Read resistance in ohms and record in traveler.

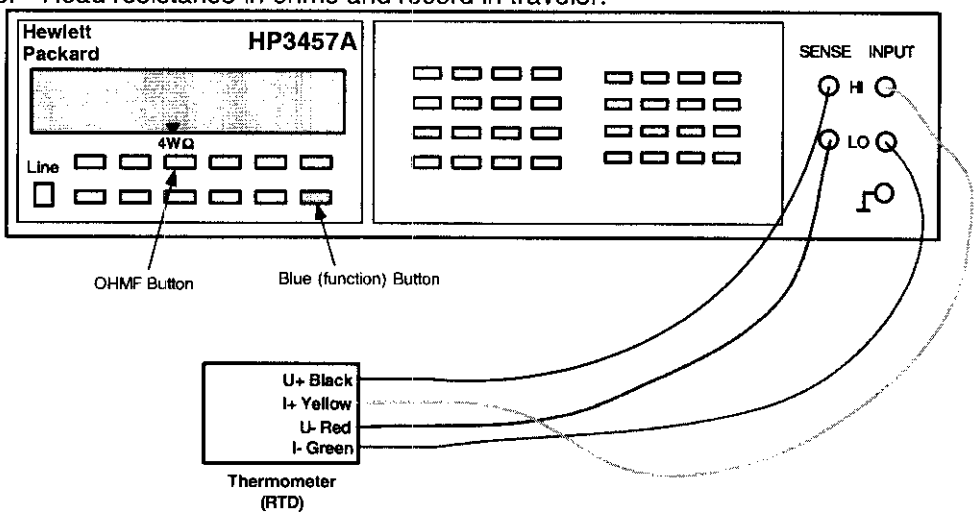

To measure the resistance of a Cryogenic (Warm-up) Heater

1. Use Hewlett Packard HP3457A digital multimeter.
2. Record temperature of building within +/- 5 degrees.
3. Press line button to turn line on.
4. Connect wires as shown in Figure below.
5. Push blue button (function key) once.
6. Push OHMF button.
7. Verify arrow in readout is above the 4WΩ (meaning a 4 wire resistance measurement). **Note: Although this is technically a 4 wire measurement, it is effectively a 2 wire measurement, since there are only 2 wires connected to each heater.**
8. Read resistance in ohms and record in traveler.

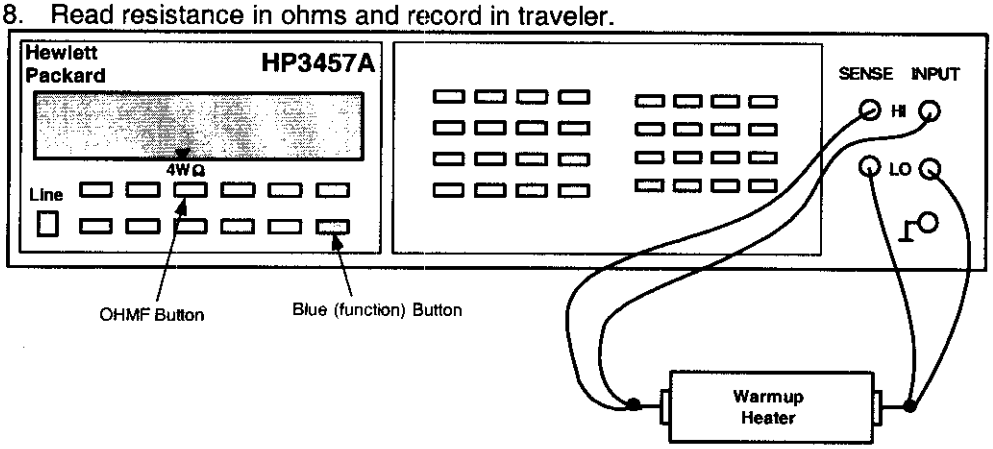

68

Q1 - RTD's and Cryogenic (warm-up) Heaters			
Component	**Fermi**	**CERN**	**Resistance**
Q1 RTD, primary	TaQ1	TT8311	73.732 Ω
Q1 RTD, redundant	TbQ1	TT8321	66.805 Ω
Q1 Cryogenic (warm-up) Heater (LE) - wire at top (CERN #1 I+)	W1aQ1	EH8311+	17.3929 Ω
Q1 Cryogenic (warm-up) Heater (LE) - wire at bottom (CERN #1 I-)	W2aQ1	EH8311-	
Q1 Cryogenic (warm-up) Heater (Non-LE) - wire at top (CERN #2 I+)	W1bQ1	EH8321+	17.8229 Ω
Q1 Cryogenic (warm-up) Heater (Non-LE) - wire at bottom (CERN #2 I-)	W2bQ1	EH8321-	

Technician(s) _____ Date 2/12/04

Using the Hewlett Packard HP3457A digital multimeter, measure the Protection (Strip) Heater Resistance for Q1.

Q1 Protection (Strip) Heater Resistance					
Fermi	**CERN**	**KEK**	**Description**	**Limit**	**Resistance**
H1aQ1	**YT1111+**	**HA1**	**Circuit A**	Ω	29.277 Ω
H2aQ1	**YT1111-**	**HA2**			
H1bQ1	**YT1121+**	**HB1**	**Circuit B**	Ω	29.296 Ω
H2bQ1	**YT1121-**	**HB2**			

Technician(s) _____ Date 2/12/04

13.2 Using the HP4284A, connect power thru the corrector Power Leads (HA1 and HB1 to measure Q1-H1 or VA1 and VB1 to measure Q1-V1). Connect the Sense Leads as shown in table below and record resistance.

MCBX Corrector Coil Taps			
Component	**FermiLab Label**	**CERN Label**	**Resistance**
Q1-H1	**VTH1**	**EE8121**	22.3572 Ω
	HA1	**N/A**	
Q1-V1	**VTV1**	**EE8111**	18.4746 Ω
	VA1	**N/A**	

Technician(s) Date 2/12/04

XXX 13.3 Hipot according to table below. Hipot to 3kV. Maximum leakage is 3μA.

Hipot Heaters to Coil and Ground.

High Potential	Grounded	Floating	Leakage
All Strip Heaters	Coils, Yoke, Q1 Instrumentation Bus, Lead and Corrector Coil Busses, RTD's and Warm-up Heaters	Nothing	018 μA

Hipot Coil to Heaters and Ground.

High Potential	Grounded	Floating	Leakage
All Coils	Strip Heaters, Yoke, Q1 Instrumentation Bus, 8kA and 5kA Lead Busses and Corrector Coil Busses, RTD's and Warm-up Heaters	Nothing	.258 μA

Technician(s) Date 2-13-04

Responsible Authority/Physicist Date 2-13-04

Cryogenic Thermometer Traveller

DESCRIPTION

Part description:	Cryogenic thermometer	**Top Assembly Identification:**	LMQXA01
Part Identification:	HCQITESCXT-CR012650	**Manufactured By:**	Fermilab
Serial Number:	CX_LS_X16827		

CABLING

Connector Tag Name

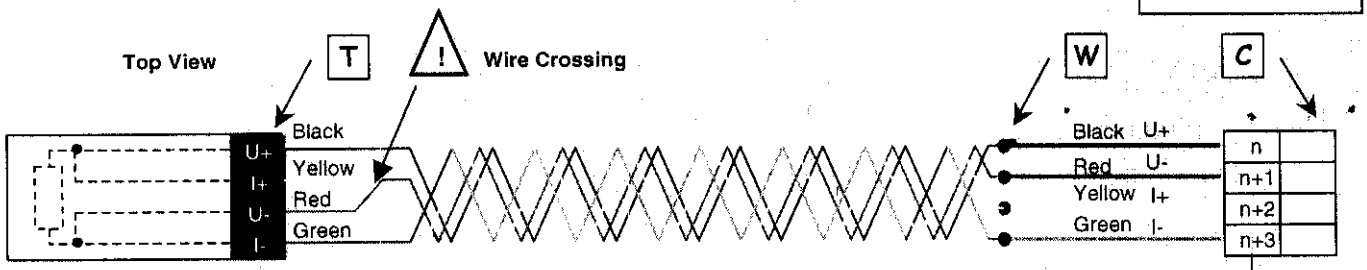

Fixing Case

Thread ☐
Hole ☐
Stud ☐

Thermometer Cable for Type ST

ρ (300 K) = 0.32 Ohm/m
Copper AWG 30
Length = ☐ m

Extension

ρ (300 K) = 0.07 Ohm/m
Copper AWG 24
Length: 0.8 m

CHECKS

Intervention	Date/ DD-MMM-YYYY	Check Point	R(U+,U-,I+,I-) [Ohm] 4W	R(U-,I-) [Ohm] 2W	R(U+,I+) [Ohm] 2W	R(U+,GND) [Ohm] 2W	Temperature [K]	Firm/Laboratory	Checked by
Calibration	*21-Jan-2002*	T	*66.07*	*n.a*	*n.a*	*OVL*	*Ambient*	*IPN*	*Joly*
Expedition	*12-Mar-2003*	T	*64.470*	*0.1*	*0.1*	*OVL*	*293*	*CERN*	*Grivat*
Reception	22-Oct-03	T W C	66.93				—	Fermi	Evans
		T W C							
		T W C							
		T W C							
		T W C							
		T W C							
		T W C							
		T W C							
		T W C							
		T W C							
		T W C							
		T W C							
		T W C							
		T W C							
		T W C							
		T W C							
		T W C							
		T W C							
		T W C							
		T W C							
		T W C							
		T W C							
		T W C							
		T W C							
		T W C							

Cryogenic Thermometer Traveller

DESCRIPTION

Part description:	Cryogenic thermometer	**Top Assembly Identification:**	LMQXA01
Part Identification:	HCQITESCXT-CR012720		
Serial Number:	CX_LS_X16839	**Manufactured By:**	Fermilab

CABLING

Connector Tag Name

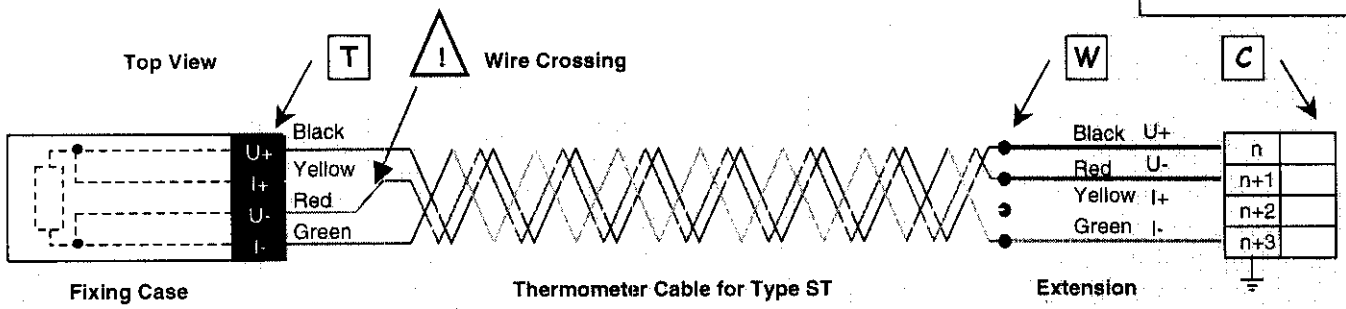

Fixing Case

Thread ☐
Hole ☐
Stud ☐

Thermometer Cable for Type ST

ρ (300 K) = 0.32 Ohm/m
Copper AWG 30
Length = ☐ m

Extension

ρ (300 K) = 0.07 Ohm/m
Copper AWG 24
Length: 0.8 m

CHECKS

Intervention	Date/ DD-MMM-YYYY	Check Point	R(U+,U-,I+,I-) [Ohm] 4W	R(U-,I-) [Ohm] 2W	R(U+,I+) [Ohm] 2W	R(U+,GND) [Ohm] 2W	Temperature [K]	Firm/Laboratory	Checked by
Calibration	*21-Jan-2002*	T	*72.88*	*n.a*	*n.a*	*OVL*	*Ambient*	*IPN*	*Joly*
Expedition	*12-Mar-2003*	T	*71.450*	*0.1*	*0.1*	*OVL*	*293*	*CERN*	*Grivat*
Reception	22-Oct-03	T W C	73.86				—	Fermi	Evans
		T W C							
		T W C							
		T W C							
		T W C							
		T W C							
		T W C							
		T W C							
		T W C							
		T W C							
		T W C							
		T W C							
		T W C							
		T W C							
		T W C							
		T W C							
		T W C							
		T W C							
		T W C							
		T W C							
		T W C							
		T W C							
		T W C							

Top - Top

Cryogenic Thermometer Traveller

Collection Tank Thermometer

DESCRIPTION*

Part Description:	Cryogenic thermometer	Instrument Name:	LMQXA01
CERN Part Identifier:	HCQITELCXT-CR002800	Top Assembly:	
Other Identification:	CX_LS_X14581	Functional Equipment Identifier:	

* In accordance with LHC-QIT-QA-0002

CABLING

Connector Tag Name

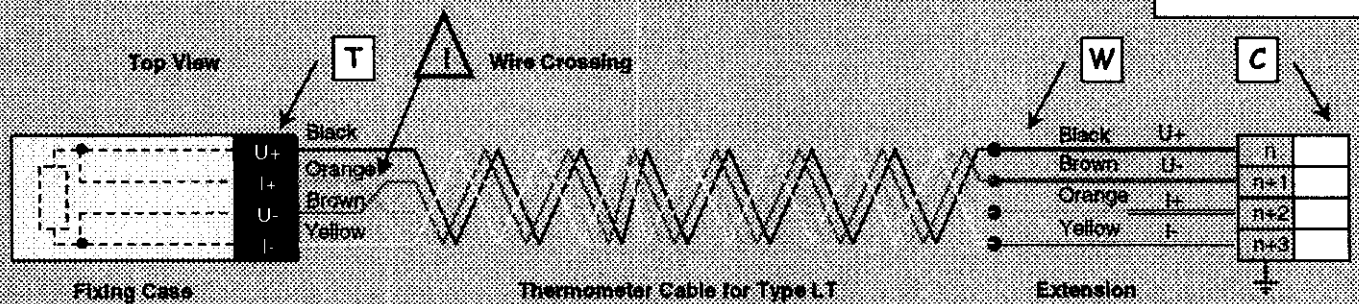

Fixing Case

Thread ☐ Stud ☐

Hole ☐ Pipe ☐

Thermometer Cable for Type LT

ρ (300 K) = 46 Ohm/m

Manganin AWG 36

Length = ☐ m

Extension

ρ (300 K) = 0.07 Ohm/m

Copper AWG 24

Length: 5 cm

CHECKS

Intervention	Date/ DD-MMM-YYYY	Check Point	R(U+,U-,I+,I-) [Ohm] 4W	R(U+,I+) [Ohm] 2W	R(U-,I-) [Ohm] 2W	R(U+,GND) [Ohm] 2W	Temperature [K]	Firm/Laboratory	Checked by
Calibration	29-Jun-2001	T	58.80	18.28	18.20	OVL	300	IPN	Joly
Expedition	15-Sep-2003	T	60.24	18.28	18.20	OVL	293.00	CERN	Vauthier
Reception	24Jun04	T W C	60.54					Fermi	Evans
		T W C							
		T W C							
		T W C							
		T W C							
		T W C							
		T W C							
		T W C							
		T W C							
		T W C							
		T W C							
		T W C							
		T W C							
		T W C							
		T W C							
		T W C							
		T W C							
		T W C							
		T W C							
		T W C							
		T W C							
		T W C							
		T W C							
		T W C							
		T W C							
		T W C							

Top - Bottom

Cryogenic Thermometer Traveller

Collection Tank Thermometer

DESCRIPTION*

Part Description:	Cryogenic thermometer	Instrument Name:	LMQXA01
CERN Part Identifier:	HCQITELCXT-CR005770	Top Assembly:	
Other Identification:	CX_LS_X15164	Functional Equipment Identifier:	

* In accordance with LHC-QIT-QA-0002

CABLING

Connector Tag Name

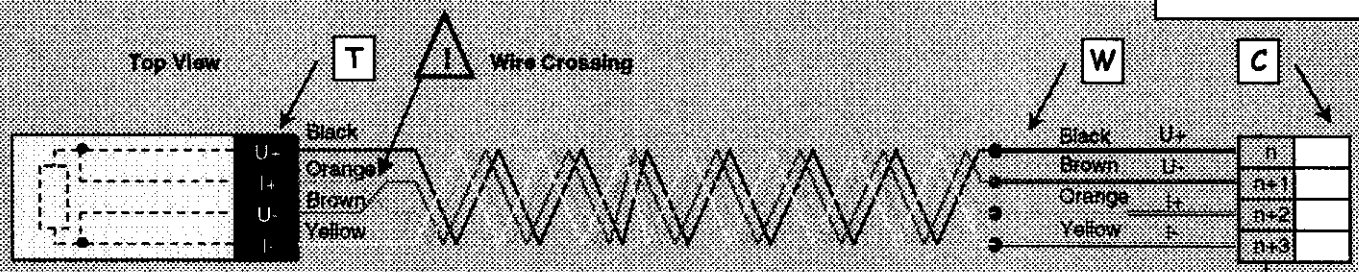

Fixing Case

Thread ☐ Stud ☐

Hole ☐ Pipe ☐

Thermometer Cable for Type LT

ρ (300 K) ≈ 36 Ohm/m

Manganin AWG 36

Length ≈ ☐ m

Extension

ρ (300 K) ≈ 0.07 Ohm/m

Copper AWG 24

Length: 5 cm

CHECKS

Intervention	Date DD-MMM-YYYY	Check Point	Π(U+,U-,I+,I-) [Ohm] 4W	R(U-,I-) [Ohm] 2W	Π(U+,I+) [Ohm] 2W	R(U+,GND) [Ohm] 2W	Temperature [K]	Firm/Laboratory	Checked by
Calibration	10-Oct-2001	T	57.97	15.89	16.97	OVL	300	IPN	Joly
Expedition	15-Sep-2003	T	59.27	15.89	16.97	OVL	293.00	CERN	Vauthier
Reception	24 Jun 04	T W C	59.37					Fermi	Evans
		T W C							
		T W C							
		T W C							
		T W C							
		T W C							
		T W C							
		T W C							
		T W C							
		T W C							
		T W C							
		T W C							
		T W C							
		T W C							
		T W C							
		T W C							
		T W C							
		T W C							
		T W C							
		T W C							
		T W C							
		T W C							
		T W C							
		T W C							
		T W C							

Bottom - Top

Cryogenic Thermometer Traveller

Collection Tank Thermometer

DESCRIPTION*

Part Description:	Cryogenic thermometer	Instrument Name:	LMQXA01
CERN Part Identifier:	HCQITELCXT-CR005720	Top Assembly:	
Other Identification:	CX_LS_X15159	Functional Equipment Identifier:	

* In accordance with LHC-QIT-QA-0002

CABLING

Connector Tag Name

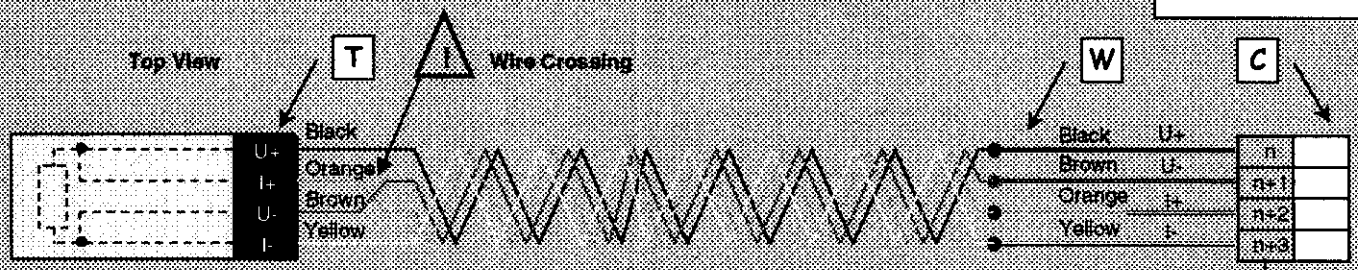

Fixing Case

Thread ☐ Stud ☐

Hole ☐ Pipe ☐

Thermometer Cable for Type LT

ρ (300 K) ≈ 38 Ohm/m

Manganin AWG 38

Length ≈ ☐ m

Extension

ρ (300 K) ≈ 0.07 Ohm/m

Copper AWG 24

Length: 5 cm

CHECKS

Intervention	Date* DD-MMM-YYYY	Check Point			R(U+,U-,I+,I-) [Ohm] 4W	R(U-,I-) [Ohm] 2W	R(U+,I-) [Ohm] 2W	R(U+,GND) [Ohm] 2W	Temperature [K]	Firm/Laboratory	Checked by
Calibration	10-Oct-2001	T			60.10	14.08	13.89	OVL	300	IPN	Joly
Expedition	15-Sep-2003	T			61.29	14.08	13.89	OVL	293.00	CERN	Vauthier
Reception	24Jun04	T	W	C	61.34					Fermi	Evans
		T	W	C							
		T	W	C							
		T	W	C							
		T	W	C							
		T	W	C							
		T	W	C							
		T	W	C							
		T	W	C							
		T	W	C							
		T	W	C							
		T	W	C							
		T	W	C							
		T	W	C							
		T	W	C							
		T	W	C							
		T	W	C							
		T	W	C							
		T	W	C							
		T	W	C							
		T	W	C							
		T	W	C							
		T	W	C							
		T	W	C							
		T	W	C							

Bottom - Bottom

Cryogenic Thermometer Traveller

Collection Tank Thermometer

DESCRIPTION*

Part Description:	Cryogenic thermometer	Instrument Name:	LMQXA01
CERN Part Identifier:	HCQITELCXT-CR002780	Top Assembly:	
Other Identification:	CX_LS_X14577	Functional Equipment Identifier:	

* In accordance with LHC-QIT-QA-0002

CABLING

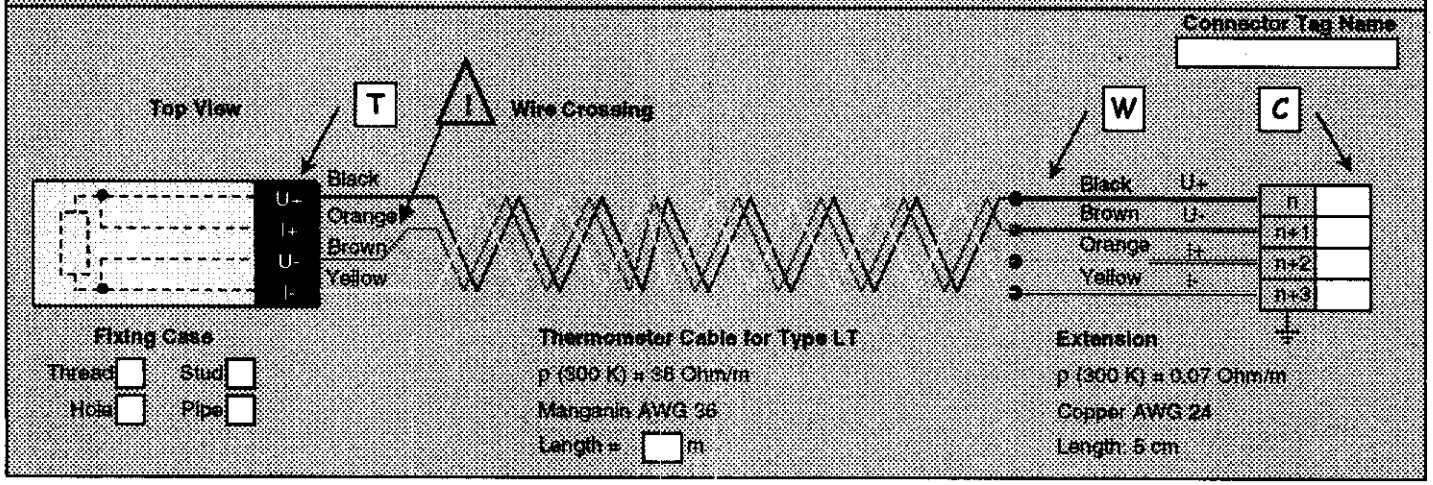

CHECKS

Intervention	Date/ DD-MMM-YYYY	Check Point			R(U+,U-,I+,I-) [Ohm] 4W	R(U-,I-) [Ohm] 2W	R(U+,I+) [Ohm] 2W	R(U+,GND) [Ohm] 2W	Temperature [K]	Firm/Laboratory	Checked by
Calibration	29-Jun-2001	T			57.70	19.16	19.06	OVL	300	IPN	Joly
Expedition	15-Sep-2003	T			59.10	19.16	19.06	OVL	293.00	CERN	Vauthier
Reception	24Jun04	T	W	C	59.18					Fermi	Evans
		T	W	C							
		T	W	C							
		T	W	C							
		T	W	C							
		T	W	C							
		T	W	C							
		T	W	C							
		T	W	C							
		T	W	C							
		T	W	C							
		T	W	C							
		T	W	C							
		T	W	C							
		T	W	C							
		T	W	C							
		T	W	C							
		T	W	C							
		T	W	C							
		T	W	C							
		T	W	C							
		T	W	C							
		T	W	C							
		T	W	C							
		T	W	C							
		T	W	C							

ADDITIONAL PARTS REQUEST

Additional Parts Request Form Shall Be Used To Access All Items From Inventory With The Exception Of Parts Kits.

THIS FORM MUST BE SIGNED BY AN ACQUISITIONER BEFORE BRINGING TO THE STOCKROOM

MAGNET OR COIL # UMQ4A01

REQUESTED BY S. GOULD

DATE 10/22/03

DELIVER TO ICB

BUDGET CODE 300/1.1.1.3.4

NEED BY DATE 10/22/03

JOB TICKET #

MMR #

MACHINE SHOP REQUISITION #

PO #

PURCHASE RELEASE #

OTHER

PARTS STATUS (CHECK ONE)

____DEFECTIVE PARTS ISSUED ____PARTS SCRAPPED ____A/R ITEMS

____DEFECTIVE ASSEMBLY ____MISSING FROM KIT ALREADY ISSUED

✓ INDIVIDUAL PARTS ____CONSUMABLES ____PARTS LOST

ACQUISITIONER SIGNATURE [signature] ID# 4223 DATE 10/22/03

PLEASE INDICATE REVISION REQUIRED

IN STOCK	LOCATION	PART#	REV	QTY	UOM	DESCRIPTION	RF #	SIR#
92	IB#4-BIN	390294	—	4	EA	MCBX RESTR NUTS	76666	

POSTED

STOCKROOM SIGNATURE [signature] ID# 12304 DATE 10-22-03

PARTS DELETED FROM DATABASE [signature] ID# 12304 DATE 10-23-03

A COPY OF THIS FORM IS TO BE INCLUDED IN WITH THE TRAVELER

PARTS RECEIVED BY [signature] ID# 4895 DATE 10/22/03

ADDITIONAL PARTS REQUEST

ADDITIONAL PARTS REQUEST FORM SHALL BE USED TO ACCESS ALL ITEMS FROM INVENTORY WITH THE EXCEPTION OF PARTS KITS.

THIS FORM MUST BE SIGNED BY AN ACQUISITIONER BEFORE BRINGING TO THE STOCKROOM

MAGNET OR COIL # *LQXA01*

REQUESTED BY *Jim Rife*

DATE REQUESTED *9-25-03*

DELIVER TO *Jim Rife*

BUDGET CODE *LCD 300.1.1.1.3.4*

NEED BY DATE *10/1/03*

JOB TICKET #

MMR #

MACHINE SHOP REQ. #

PO #

PURCHASE RELEASE #

OTHER

PARTS STATUS (CHECK ONE)

☐ DEFECTIVE PARTS ISSUED ☐ PARTS SCRAPPED ☐ A/R ITEMS

☐ DEFECTIVE ASSEMBLY ☐ MISSING FROM KIT ALREADY ISSUED

☒ INDIVIDUAL PARTS ☐ CONSUMABLES ☐ PARTS LOST

ACQUISITIONER SIGNATURE Marsha Schmidt **ID#** 4223 **DATE** 9/25/03

PLEASE INDICATE REVISION REQUIRED

STK	LOCATION	PART #	REV	QTY	UOM	DESCRIPTION	RF #	SIR #
120	R2S2L4	MA-390485	0	4	Each	Shim .015	79126	
131	R2S2L4	MA-390484	0	4	Each	Shim .010	79125	
148	R2S2L4	MA-390483	0	4	Each	Shim .005	79124	
145	R2S2L4	MA-390482	0	4	Each	Shim .002	79123	
18	IB4 BIN	MC-390538	0	2	Each	Q1 Cold Bore Flange	79332	
68	IB4 BIN	MA-393030	0	8	Each	Set Screw 10-32 X .188 SS	77839	POSTED
72	IB4 BIN	MB-390270	A	4	Each	Q1/Q3 Transport Restraint Adj	76665	
28	IB4 BIN	MB-390228	0	4	Each	Mounting Flat Washer	77130	

STOCKROOM SIGNATURE Doug Kelley **ID#** 12304 **DATE** 10/6/03

PARTS DELETED FROM DATABASE Doug Kelley **ID#** 12304 **DATE** 10/6/03

A COPY OF THIS FORM IS TO BE INCLUDED IN WITH THE TRAVELER

PARTS RECEIVED BY [illegible] **ID#** 4895 **DATE** 10/6/03

PLEASE INDICATE REVISION REQUIRED

LOCATION	PART #	REV	QTY	UOM	DESCRIPTION	RF #	SIR #
IB4 BIN	*MB-390247*	*0*	*4*	*Each*	*SHCS 1/2 -20 X 3 Silver Plated*	74622	
18 *P/N*	*ME-390037*	*B*	*1*	*Each*	*Corrector Mounting Ring*	N/A	
9 *P/N*	*MD-390255*	*A*	*1*	*Each*	*Q1 Non IP End Dome Bellows Assy*	78843	
9 *P/N*	*MD-390172*	*C*	*1*	*Each*	*Q1 IP End Dome Weldmentp*	N/A	

ORIGINAL

TD/ENGINEERING & FABRICATION

POSTED

PARTS KIT REQUEST

IMPORTANT NOTES:
1) MAGNET NUMBER MUST BE FILLED IN.
2) ONLY ONE FORM PER MAGNET.
3) PARTS COORDINATOR OR DESIGNEE MUST SIGN THIS FORM.
4) MATERIAL CONTROL WILL ISSUE PARTS AND RECORD ROUTING NUMBER.
5) ANY QUANTITIES NOT AVAILABLE WILL HAVE COMMENTS RETURNED TO THE PARTS COORDINATOR FOR REVIEW.

COPY

DELIVER TO _____ ICB

BUDGET CODE: ~~DEL~~ LCD GV 12-10-03

PROJECT NUMBER: 300
TASK NUMBER: 1.1.1.3 ~~1~~ 4

MAGNET NUMBER: [redacted]

RELEASED BY

PRODUCTION SIGNATURE: J. Szostak x2003

TODAYS DATE: 24-Nov-03

NEED DATE: [redacted]

ISSUE VERIFICATION

MATERIAL CONTROL SIGNATURE: [signature]

DATE ISSUED TO STOCKROOM: 11/24/03

THIS KIT LIST IS FOR

ME-390127	D	Q1 CRYOSTAT GENERAL ASSEMBLY

PART NUMBER	REV	DESCRIPTION	REQUIRED QTY/ASS'Y		MATERIAL CONTROL: QTY FILLED OUT BY STOCK ROOM: ISSUED	ROUTE FORM	NOT AVAIL	FILLED OUT BY EXPEDITER: DATE AVAIL	COMMENTS TO PRODUCTION MANAGER	PROD VERIFY PART	SUPT. VERIFY PART
[redacted]											
390039	B	ADJUSTING SCREW	8	EA	8	78905		11/24/03	JB4BM-207 pcs		
390211	B	TARGET HOLDER	[redacted]		[redacted]						
390374	*	Blank Non-Rotatable Conflat Flange, 4.62" OD 304 SS	8	EA	8	78987			R8.3.4 - 205 pcs		
390375	*	COPPER GASKET	[redacted]		[redacted]						
390376	*	BOLT SET, HEX HEAD, 5/16 - 24 x 1.25 w/ WASHER	80	EA	80	72306			- 2044 pcs		
390377	*	WASHER .656" ID x 1.34" OD x [redacted] STN STEEL	[redacted]		[redacted]						
390426	*	REFERENCE SOCKET CUP (Furnished by CERN)	8	EA	8	77884			R1.3.5 - 242 pcs		
390539	*	TARGET HOLDER, RIGHT	[redacted]		[redacted]						
390540	*	TARGET HOLDER, LEFT	2	EA	2	79555			R8.5.L5 - 52 pcs		
390643	B *	Q1 NON-IP END ALIGNMENT FIDUCIAL SPACER	[redacted]		[redacted]						
393021	*	M16-2 x 70.0 mm LG HEX SHCS, 18-8 STN STEEL	8	EA	8	77840			JB4B2 - 257 pcs		
393024	*	M6 FLAT WASHER, 18-8 STN STEEL	[redacted]		[redacted]						
393036	*	M10-1.5 x 25mm LG HEX SHCS 18-8 STN STEEL	24	EA	24	77899			- 656 pcs		
393045	*	M6-1.0 x 35mm LG HEX SHCS 18-8 STN STEEL	[redacted]		[redacted]						
393048	*	M8 x 30mm LG HEX SPRING PIN 18-8 STN STEEL	8	EA	8	78887			- 214 pcs		
393220	*	M10 LOCK WASHER, 18-8 STN STEEL	[redacted]		[redacted]						
390122	D	VACUUM VESSEL ASSEMBLY	ICB	HAS				—			

RETURN THIS COMPLETED PARTS KIT REQUEST WITH THE ISSUED PARTS TO THE PARTS COORDINATOR.

[redacted] : STOCKROOM SIGNATURE AND DATE

TRAVELER NO. TR-333755

KIT IS COMPLETE (PARTS COORDINATOR SIGNATURE): [signature] BADGE # 02943C

[redacted]

TD/ENGINEERING & FABRICATION

POSTED

PARTS KIT REQUEST

ORIGINAL

COPY

GV 12-10-03

IMPORTANT NOTES:
1) MAGNET NUMBER MUST BE FILLED IN.
2) ONLY ONE FORM PER MAGNET.
3) PARTS COORDINATOR OR DESIGNEE MUST SIGN THIS FORM.
4) MATERIAL CONTROL WILL ISSUE PARTS AND RECORD ROUTING NUMBER.
5) ANY QUANTITIES NOT AVAILABLE WILL HAVE COMMENTS RETURNED TO THE PARTS COORDINATOR FOR REVIEW.

DELIVER TO _____ ICB

BUDGET CODE: ~~LOP~~ LCD

PROJECT NUMBER: 300
TASK NUMBER: 1.1.1.3.4

RELEASED BY

MAGNET NUMBER: [redacted]

PRODUCTION SIGNATURE: J. Szostak x2003

TODAYS DATE: 24-Nov-03

NEED DATE: [redacted]

ISSUE VERIFICATION

MATERIAL CONTROL SIGNATURE: [signature]

DATE ISSUED TO STOCKROOM: 11/24/03

THIS KIT LIST IS FOR

ME-390127	D	Q1 CRYOSTAT GENERAL ASSEMBLY

PART NUMBER	REV	DESCRIPTION	REQUIRED QTY/ASS'Y		MATERIAL CONTROL: QTY FILLED OUT BY STOCK ROOM: ISSUED	ROUTE FORM	NOT AVAIL	FILLED OUT BY EXPEDITER: DATE AVAIL	COMMENTS TO PRODUCTION MANAGER	PROD VERIFY PART	SUPT. VERIFY PART
ME-390173	*	Q1 INSULATED SHIELD AND PIPING ASSEMBLY									
390487	*	Q1 SHIELD MLI INNER BLANKET	1	EA	1	79869		11/24/03	site 38 - 3 pcs.		
390488	*	Q1 SHIELD MLI OUTER BLANKET	1	EA	1	[illegible]					
ME-390429	A	Q1 THERMAL SHIELD ASSEMBLY									
390083	A	SUPPORT BAND	4	EA	4			[illegible]	[illegible] - [illegible] pcs.		
390086		RETAINER	16	EA	16	77131			IB4 Bin - 370 pcs.		
390316	A	COOLING PIPE BRACKET	4	EA	4	[illegible]					
390317		COOLING PIPE CLAMP	8	EA	8	77196			- 191 pcs.		
390373		ALUMINUM SPACER	[illegible]	EA	[illegible]	[illegible]					
390378		RETAINING WASHER	232	EA	232	79003			- 6020 pcs.		
390431	A	COOLING TUBE WELDMENT	4	EA	4	[illegible]					
390433		IP END SECTION	2	EA	2	79610			IB4 - 18 pcs.		
390434		NON-IP END SECTION	[illegible]	EA	[illegible]	[illegible]					
390435		Q1 - Q3 CENTER SECTION	2	EA	2	79382			- 36 pcs.		
390466		COOLING PIPE CROSSOVER	[illegible]	EA	[illegible]	[illegible]					
390467		COOLING PIPE CROSSOVER CONNECTOR	2	EA	2	78930			IB4 Bin - 18 pcs.		
393018		M8 x 25.0mm LG SHCS, 18-8 STN STEEL	[illegible]	EA	[illegible]	[illegible]					
393019		M8 x 45.0mm LG SHCS, 18-8 STN STEEL	8	EA	8	76748			- 68 pcs.		
393023		M8 HEX NUT, 18-8 STN STEEL	16	EA	16	[illegible]					
393025		M8 FLAT WASHER, 18-8 STN STEEL	16	EA	16	76745			- 1086 pcs.		
393027		M8 LOCK WASHER, 18-8 STN STEEL	16	EA	16	[illegible]			[illegible]		
393028		BUTTON HEAD CAP SCREW, M5 x 16.0 LG	232	EA	232	70826			- 5965 pcs.		
ME-390174	B	Q1 INTERNAL PIPING ASSEMBLY (SEPARATE SHEET)									

RETURN THIS COMPLETED PARTS KIT REQUEST WITH THE ISSUED PARTS TO THE PARTS COORDINATOR.

[redacted] : STOCKROOM SIGNATURE AND DATE

TRAVELER NO. TR-333755

KIT IS COMPLETE (PARTS COORDINATOR SIGNATURE) [signature] BADGE # 02943C

[redacted]

ORIGINAL

TD/ENGINEERING & FABRICATION

PARTS KIT REQUEST

POSTED

Doug Kelley 12/18/03

IMPORTANT NOTES:
1) MAGNET NUMBER MUST BE FILLED IN.
2) ONLY ONE FORM PER MAGNET.
3) PARTS COORDINATOR OR DESIGNEE MUST SIGN THIS FORM.
4) MATERIAL CONTROL WILL ISSUE PARTS AND RECORD ROUTING NUMBER.
5) ANY QUANTITIES NOT AVAILABLE WILL HAVE COMMENTS RETURNED TO THE PARTS COORDINATOR FOR REVIEW.

DELIVER TO_____ICB

BUDGET CODE: ~~LCI~~ LCD

PROJECT NUMBER: 300
TASK NUMBER: 1.1.1.3.4

RELEASED BY

MAGNET NUMBER: LQXA-01

PRODUCTION SIGNATURE: J. Szostak x2003

TODAYS DATE: 24-Nov-03

NEED DATE: ~~1-Dec-03~~

ISSUE VERIFICATION

MATERIAL CONTROL SIGNATURE: Marsha Ehrlich

DATE ISSUED TO STOCKROOM: 11/24/03

THIS KIT LIST IS FOR

ME-390174	B	Q1 CRYOSTAT ASSEMBLY - INTERNAL PIPING

					MATERIAL CONTROL					PROD	SUPT.
					QTY FILLED OUT BY STOCK ROOM			FILLED OUT BY EXPEDITER			
PART NUMBER	REV	DESCRIPTION	REQUIRED QTY/ASS'Y		ISSUED	ROUTE FORM	NOT AVAIL	DATE AVAIL	COMMENTS TO PRODUCTION MANAGER	VERIFY PART	VERIFY PART
390033	B	[redacted]							[redacted]		
390032	B	PUMPING LINE END FLANGE	1	EA	1	77210			- 79 pcs		
MD 390092	A	Q1 / Q3 PIPE SUPPORT ASSEMBLY							P/N - 54 pcs		
390136	•	TIE BAR RETAINING CLAMP	4	EA	4	77132			JB4 Bin - 109 pcs		
390192	•	Q1 / Q3 INTERCEPT LINE BELLOW							[redacted]		
MD 390193	A	Q1 COOLDOWN LINE WELDMENT	1	EA	1	N/A		11/24/03	P/N - 9 pcs		
390278	•	WELD CONNECTOR ADAPTER							[redacted]		
390379	A	INTERCEPT LINE PIPE STOP	6	EA	6	78894			JB4 Bin - 192 pcs		
390486	•	Q1 / Q3 PIPE ANCHOR							[redacted]		
MC-390638	•	Q1 / Q3 INSTALLATION TIE ROD ASSEMBLY									
390639	•	Q1 & Q3 INSTALLATION TIE ROD SHORT THREADED ROD	2	EA	2	[redacted]		11/24/03	JB4 - 2 pcs		
393046	•	JAM NUT (LH)	4	EA	4	80074		11/24/03	JB4 Bin - 122 pcs		
393225	•	STD ANSI HEX THIN JAM NUT 1/2-13 UNC	4	EA	4	[redacted]			- 289 pcs		
393226	•	STD HEX COUPLING NUT 1/2-13 UNC (RH-LH)	4	EA	4	80075			- 120 pcs		
MA 393227	•	THREADED ROD 1/2-13 UNC - 24" x 4 FT LONG	2	EA	2	[redacted]			R1,2,4 - 48 pcs		
393228	•	THREADED ROD 1/2-13 UNC - 24 (LH) x 3 FT LONG	2	EA	2	80072			R1,2,3 - 60 pcs		
393017	•	M6 x 45.0mm LG HEX SHCS, 18-8 STN STEEL	4	EA	4	77846		11/24/03	JB4 Bin - 68 pcs		
393022	A	M6 HEX NUT 18-8 STN STEEL	4	EA	4	[redacted]			- 70 pcs		
393024	•	M6 FLAT WASHER 18-8 STN STEEL	4	EA	4	78891			- 824 pcs		
393026	•	M6 LOCK WASHER 18-8 STN STEEL	4	EA	4	[redacted]			- 128 pcs		
ME-390541	•	Q1 PIPING INSULATION									
390542	•	Q1 / Q3 MLI END BLANKET	1	EA	1	N/A		11/24/03	R1,S3,L2 - 20 pcs		
ME 390543	•	Q1 / Q3 MLI MID BLANKET	1	EA	1	N/A			S1,2,3,8 - 12 pcs		
ME 390544	•	Q1 MLI IP END BLANKET	1	EA	1	N/A			- 5 pcs		
ME-390525	•	Q1 COLD MASS ASSEMBLY (SEPARATE SHEET)									

RETURN THIS COMPLETED PARTS KIT REQUEST WITH THE ISSUED PARTS TO THE PARTS COORDINATOR.

[redacted] 12/17/03 : STOCKROOM SIGNATURE AND DATE

TRAVELER NO. TR-333755

KIT IS COMPLETE (PARTS COORDINATOR SIGNATURE): John P. Szostak BADGE # 02943C

DATE: 12/17/03

TD/ENGINEERING & FABRICATION

POSTED

PARTS KIT REQUEST

COPY

ORIGINAL

IMPORTANT NOTES:
1) MAGNET NUMBER MUST BE FILLED IN.
2) ONLY ONE FORM PER MAGNET.
3) PARTS COORDINATOR OR DESIGNEE MUST SIGN THIS FORM.
4) MATERIAL CONTROL WILL ISSUE PARTS AND RECORD ROUTING NUMBER.
5) ANY QUANTITIES NOT AVAILABLE WILL HAVE COMMENTS RETURNED TO THE PARTS COORDINATOR FOR REVIEW.

Doug [illegible] 12-10-03

DELIVER TO_____ICB

BUDGET CODE: ~~XC~~ LCD

PROJECT NUMBER: 300
TASK NUMBER: 1.1.1.3.~~3~~ 4

MAGNET NUMBER: [redacted]

RELEASED BY

PRODUCTION SIGNATURE: J. Szostak x2003

TODAYS DATE: 24-Nov-03

NEED DATE: 8-Dec-03

ISSUE VERIFICATION

MATERIAL CONTROL SIGNATURE: [illegible]

DATE ISSUED TO STOCKROOM: 11/24/03

THIS KIT LIST IS FOR

ME-390174	B	Q1 CRYOSTAT ASSEMBLY - INTERNAL PIPING

PART NUMBER	REV	DESCRIPTION	REQUIRED QTY/ASS'Y	MATERIAL CONTROL: QTY FILLED OUT BY STOCK ROOM: ISSUED	ROUTE FORM	NOT AVAIL	FILLED OUT BY EXPEDITER: DATE AVAIL	COMMENTS TO PRODUCTION MANAGER	PROD VERIFY PART	SUPT. VERIFY PART
ME-390182	*	Q1 PUMPING LINE WELDMENT								
390183	*	Q1 PUMPING LINE PIPE								
390184	*	Q1 PUMPING LINE RETURN FITTING	1 EA	1	80036		1	R7,3,2 - 10 pcs		
390185	*	Q1 IP END COLLECTION POT WELDMENT	EA							
ME-390175	*	Q1 HEAT EXCHANGER ASSEMBLY								
ME-390176	*	OUTER TUBE WELDMENT								
390031	B	END FLANGE	1 EA	1	77209		11/24/03	IR 4 Bin - 82 pcs		
390177	*	OUTER SHELL PIPE	EA							
390178	*	END PLATE	1 EA	1	79644		↓	R1,2,3 - 18 pcs		
ME-390179	*	CORRUGATED TUBE ASSEMBLY								
390028	*	CORRUGATED TUBE SUPPORT	6 EA	6	77647		11/24/03	T9,2 - 148 pcs		
390029	A	CORRUGATED TUBE RESTRICTOR	EA							
390393	*	CORRUGATED TUBE WELDMENT	1 EA	1	79282		↓	PIN - 9 pcs		

RETURN THIS COMPLETED PARTS KIT REQUEST WITH THE ISSUED PARTS TO THE PARTS COORDINATOR.

[redacted]: STOCKROOM SIGNATURE AND DATE

TRAVELER NO. TR-333755

KIT IS COMPLETE (PARTS COORDINATOR SIGNATURE): John J. Szostak BADGE # Ø2943C

DATE [redacted]

ORIGINAL

TD/ENGINEERING & FABRICATION

POSTED

PARTS KIT REQUEST

IMPORTANT NOTES:
1) MAGNET NUMBER MUST BE FILLED IN.
2) ONLY ONE FORM PER MAGNET.
3) PARTS COORDINATOR OR DESIGNEE MUST SIGN THIS FORM.
4) MATERIAL CONTROL WILL ISSUE PARTS AND RECORD ROUTING NUMBER.
5) ANY QUANTITIES NOT AVAILABLE WILL HAVE COMMENTS RETURNED TO THE PARTS COORDINATOR FOR REVIEW.

Doug Kelley 12-10-03

DELIVER TO _____ ICB

BUDGET CODE: ~~LCH~~ LCD

PROJECT NUMBER: 300
TASK NUMBER: 1.1.1.3.~~3~~ 4

RELEASED BY

MAGNET NUMBER: [redacted]

PRODUCTION SIGNATURE: J. Szostak x2003

TODAYS DATE: 24-Nov-03

NEED DATE: [redacted]

ISSUE VERIFICATION

MATERIAL CONTROL SIGNATURE: Marsha Schmidt

DATE ISSUED TO STOCKROOM: 11/24/03

THIS KIT LIST IS FOR

ME-390525	D	Q1 SUSPENSION SYSTEM INSTALLATION

PART NUMBER	REV	DESCRIPTION	REQUIRED QTY/ASS'Y		MATERIAL CONTROL: QTY FILLED OUT BY STOCK ROOM: ISSUED	ROUTE FORM	NOT AVAIL	FILLED OUT BY EXPEDITER: DATE AVAIL	COMMENTS TO PRODUCTION MANAGER	PROD VERIFY PART	SUPT. VERIFY PART
[redacted]											
ME-390041	D	FIXED SUPPORT ASSEMBLY									
390043	B	SUSPENSION SYSTEM SUPPORTING ASSEMBLY									
390047	~~A~~ B	SUSPENSION SYSTEM SUPPORT PIN	2	EA	2	76914		↓	R8.52.4 - 106 pcs.		
390050	A	Q2P1 SUSPENSION SYSTEM SLIDE BEARING									
390275	A	SUSPENSION SYSTEM SUPPORT PIN SHIM - 1mm	8	EA	8	76911		11/24/03	TB4 Bin - 168 pcs.		
390276	•	SUSPENSION SYSTEM SUPPORT PIN SHIM 0.5mm									
390277	•	SUSPENSION SYSTEM SUPPORT PIN BOLTS	8	EA	8	76913		↓	↓ 415 pcs.		
390480	•	SUSPENSION SYSTEM SUPPORT PIN SHIM 0.5mm									
390481	•	SUSPENSION SYSTEM SUPPORT SHIM 0.25 mm	12	EA	~~8~~ 12	79122		↓	R2.52.4 - 621 pcs.		
390524	A	2-Pc. Clamp Assembly									
ME-390042	C	SLIDING SUPPORT ASSEMBLY									
390043	B	SUSPENSION SYSTEM SUPPORTING ASSEMBLY									
390047	~~A~~ B	SUSPENSION SYSTEM SUPPORT PIN	4	EA	4	76914		↓	R8.52.4 - 106 pcs.		
390050	A	Q2P1 SUSPENSION SYSTEM SLIDE BEARING									
390275	A	SUSPENSION SYSTEM SUPPORT PIN SHIM - 1mm	16	EA	16	76911		11/24/03	TB4 Bin - 168 pcs.		
390276	•	SUSPENSION SYSTEM SUPPORT PIN SHIM 0.5mm									
390277	•	SUSPENSION SYSTEM SUPPORT PIN BOLTS	16	EA	16	76913		↓	↓ - 415 pcs.		
390480	•	SUSPENSION SYSTEM SUPPORT PIN SHIM 0.5mm									
390481	•	SUSPENSION SYSTEM SUPPORT SHIM 0.25 mm	24	EA	24	79122		↓	↓ - 621 pcs.		

RETURN THIS COMPLETED PARTS KIT REQUEST WITH THE ISSUED PARTS TO THE PARTS COORDINATOR.

[redacted] : STOCKROOM SIGNATURE AND DATE

TRAVELER NO. TR-333755

KIT IS COMPLETE (PARTS COORDINATOR SIGNATURE): John J. Szostak BADGE # 02943C

[redacted]

TD/ENGINEERING & FABRICATION

POSTED

PARTS KIT REQUEST

ORIGINAL

IMPORTANT NOTES:
1) MAGNET NUMBER MUST BE FILLED IN.
2) ONLY ONE FORM PER MAGNET.
3) PARTS COORDINATOR OR DESIGNEE MUST SIGN THIS FORM.
4) MATERIAL CONTROL WILL ISSUE PARTS AND RECORD ROUTING NUMBER.
5) ANY QUANTITIES NOT AVAILABLE WILL HAVE COMMENTS RETURNED TO THE PARTS COORDINATOR FOR REVIEW.

DELIVER TO _____ ICB

Doug Kirby 12-10-03

BUDGET CODE: ~~XCI~~ LCD

PROJECT NUMBER: 300
TASK NUMBER: 1.1.1.3.~~X~~ 4

RELEASED BY

MAGNET NUMBER: LQXA01

PRODUCTION SIGNATURE: J. Szostak x2003

TODAYS DATE: 24-Nov-03

NEED DATE: 8-Dec-03

ISSUE VERIFICATION

MATERIAL CONTROL SIGNATURE: [signature]

DATE ISSUED TO STOCKROOM: 11/24/03

THIS KIT LIST IS FOR

ME-390525	D	Q1 SUSPENSION SYSTEM INSTALLATION

PART NUMBER	REV	DESCRIPTION	REQUIRED QTY/ASS'Y		MATERIAL CONTROL: QTY FILLED OUT BY STOCK ROOM: ISSUED	ROUTE FORM	NOT AVAIL	FILLED OUT BY EXPEDITER: DATE AVAIL	COMMENTS TO PRODUCTION MANAGER	PROD VERIFY PART	SUPT. VERIFY PART
390041	D	FIXED SUPPORT ASSEMBLY	~~1~~	~~EA~~					See separate list		
390042	C	SLIDING SUPPORT ASSEMBLY	[illegible]	[illegible]							
390118	*	TIE BAR SHIM, 6.4 mm	4	EA	4	77204		11/24/03	JB4 Bin - 53 pcs		
390119	*	TIE BAR SHIM, 2.4 mm	[illegible]	[illegible]							
390120	*	TIE BAR SHIM, 0.8 mm	4	EA	4	77202			↓ - 52 pcs		
390279	*	SUSPENSION MTG BRACKET	[illegible]	[illegible]							
390400	*	Q1 / Q3 TIE BAR ASSEMBLY	2	EA	2	77976			Bin - 36 pcs		
390534	A	SHIELDING BLOCK	[illegible]	[illegible]							
393020	*	M8 x 50.0 mm LG SHCS 18-8 STN STEEL	12	EA	12	77847			JB4 Bin - 128 pcs		
393023	*	M8 HEX NUT, 18-8 STN STEEL	[illegible]	[illegible]							
393025	*	M8 FLAT WASHER, 18-8 STN STEEL	12	EA	12	76745			- 1080 pcs		
393027	*	M8 LOCK WASHER, 18-8 STN STEEL	12	EA							
ME-390524	*	COLD MASS INSULATION ASSEMBLY									
390521	*	Q1/Q3 COLD MASS END BLANKET	1	EA	1	79874		11/24/03	Site 38 - 15 pcs		
390522	*	Q1/Q3 COLD MASS MID BLANKET	[illegible]	[illegible]							
390523	*	Q1 INSULATION, COLD MASS IP END BLANKET	1	EA	1	79876		↓	↓ - 7 pcs		
390526	B	Q1 COLD MASS WELDED ASSEMBLY	ICB	HAS							

RETURN THIS COMPLETED PARTS KIT REQUEST WITH THE ISSUED PARTS TO THE PARTS COORDINATOR.

[signature] 12/8/03 : STOCKROOM SIGNATURE AND DATE

TRAVELER NO. TR-333755

KIT IS COMPLETE (PARTS COORDINATOR SIGNATURE): John J. Szostak BADGE # 02943C

DATE 12/8/03