Document ID: 1021

LHC Q1 LQXA Cryostat Final Assembly Traveler

333755 / Rev. None

Job No:	**248**
E + F Project/Task No.:	**300/1.1.1.6.2**
M + S Project/Task No.:	**300/1.1.1.6.2**

Place This Side Down For Scanning!!!

LQXA01-0

Document ID:

1021

Job No.:

248

Project/Task No.

300/1.1.1.6.2

Series:

LQXA

Serial No:

LQXA01

Rework ID:

0

Specification No.:

333755

Revision:

None

LQXA01-0

Fermi National Accelerator Laboratory
Batavia, IL 60510

LARGE HADRON COLLIDER
Q1-LQXA/
CRYOSTAT FINAL ASSEMBLY TRAVELER

Reference Drawing(s):
Vacuum Vessel and Cryostat Assembly (ME-390127)
Q1 Cryostat Internal Piping (ME-390174)

Project/Task Number: *300/1.1.1.6.2*

Released By: *John Szostak* | **Magnet/Device Series:** *LQXA*

Date Issued: *2/10/2004 2:13:18 PM* | **Scanned Pages:** 40

Prepared by: J. Szostak

Title	Signature	Date
TD / E&F Process Engineering	*Bob Jensen* Bob Jensen / Designee	*2/10/04*
TD / LHC Production Supervisor	*Jim Rife* Jim Rife / Designee	*2/10/04*
TD / LHC Production Engineer	*Rodger Bossert* Rodger Bossert / Designee	*2/10/04*
TD / LHC Production Engineer Cryostat	*Tom Page* Tom Page / Designee	*2/10/04*
TD / LHC Project Engineer Cryostat	*Tom Nicol* Tom Nicol / Designee	*2/10/04*
TD / LHC Program Manager	*Jim Kerby* Jim Kerby / Designee	*2/10/04*

Revision Page

Revision	Step No.	Revision Description	TRR No.	Date
None	N/A	Initial Release	N/A	2/10/04

Ensure appropriate memos and specific instructions are placed with the traveler before issuing the sub traveler binder to production.

1.0 General Notes

1.1 All steps that require a sign-off shall include the Technician/Inspectors first initial and full last name.

1.2 No erasures or white out will be permitted to any documentation. All incorrectly entered data shall be corrected by placing a single line through the error, initial and date the error before adding the correct data.

1.3 All Discrepancy Reports issued shall be recorded in the left margin next to the applicable step.

1.4 All personnel performing steps in this traveler must have documented training for this traveler and associated operating procedures.

1.5 Personnel shall perform all tasks in accordance with current applicable ES&H guidelines and those specified within the step.

1.6 Cover the product/assembly with Green Herculite (Fermi stock 1740-0100) when not being serviced or assembled.

2.0 Parts Kit List

2.1 Attach the completed Parts Kit for this production operation to this traveler. Ensure that the serial number on the Parts Kit matches the serial number of this traveler. Verify that the Parts Kit received is complete.

J. Szostak
Process Engineering/Designee

2/10/04
Date

3.0 Vacuum Vessel Preparation and Painting

3.1 Record the Vacuum Vessel Serial Number.

Q1-1

Technician(s) Date 2-13-04

3.2 Inspect the transition area between the Support Sections and Tube Sections. Grind smooth if necessary.

Technician(s) Date 2-13-04

3.3 Clean the Vacuum Vessel (ME-390122) using a vacuum cleaner or equivalent.

Technician(s) Date 2-13-04

3.4 Leak Check the Vacuum Vessel Assembly (ME-390122) per ES-107240 and record results in table below.

Part No.		DETERMINATION OF DETECTABLE LEAK						
PART NO. 390122 D		SCALE UNITS BEFORE HELIUM PROBE	SCALE UNITS WHILE ENCLOSURE FLOODING	DETERMINATION OF MINIMUM DETECTABLE LEAK				
DATE TIME	OPERATOR'S LAST NAME			MDS	(Response - Bckgnd)	Leak Value)	= MDL	
10/9/02	[illegible]	58	58	2	390	58	4.75E-8	2.86E-10

Inspector Date 2-13-04

3.5 Prepare the outside of the Vacuum Vessel (ME-390122) for painting. Clean using Ethyl Alcohol (Fermi stock 1920-0550) and Kimwipes (Fermi stock 1660-2500) or equivalent.

O. Friauza — Technician(s) 2-13-04 — Date

3.6 Mask the Stainless Steel Components of the Vacuum Vessel for painting.

O. Friauza — Technician(s) 2-13-04 — Date

3.7 Prime the Vacuum Vessel using Rust-o-leum (Fermi stock 1825-4000).

O. Friauza — Technician(s) 2-13-04 — Date

3.8 Verify that the Screws (MA-393036) will thread easily into the appropriate holes in the Vacuum Vessel (ME-390122). If necessary, tap out holes with M10 – 1.5 Tap. Move Vacuum Vessel (ME-390122) to Table.

[illegible] — Lead Person 2/13/04 — Date

3.9 Paint the Vacuum Vessel using Flambeau Red (Fermi stock 1825-3710).

O. Friauza — Technician(s) 2-13-04 — Date

4.0 Suspension System

4.1 Clean the Suspension System with Ethyl Alcohol (Fermi stock 1920-0550) and Kimwipes (Fermi stock 1660-2500) or equivalent.

Part Name	Part Number	Quantity	Completed
Fixed Support Assembly	**(ME-390041)**	**1**	✓
Sliding Support Assembly	**(ME-390042)**	**1**	✓
Tie Bar Assembly	**(ME-390400)**	**2**	✓
Tie Bar Shim, 6.4mm (.250")	**(ME-390118)**	**4**	✓
Tie Bar Shim, 2.4mm (.093")	**(ME-390119)**	**4**	✓
Tie Bar Shim, 0.8mm (.031")	**(ME-390120)**	**4**	✓
Suspension System Adjusting Screw	**(MB-390039)**	**8**	✓
M16 x 70mm SHCS	**(MA-393021)**	**8**	✓
Washer (.656" ID x 1.38" OD x .13" THK STN STEEL)	**(MA-390377)**	**8**	✓

Label the IP End and the Non-IP End of the Vacuum Vessel with a temporary sticker or equivalent.

Technician(s) _____ Date 2/13/04

4.2 Insert the Fixed Support Assembly (ME-390041) into the Vacuum Vessel and position at the Non-IP End.

Technician(s) _____ Date 1/14/04

4.3 Install the Suspension System Adjusting Screws (MB-390039) and Washer (MA-390377) into the Vacuum Vessel to hold the Fixed Support Assembly in place. Coat all screw threads with Molybdenum Disulfide prior to installation.

Technician(s) _____ Date 1/16/04

4.4 Adjust the Vertical and rotational alignment of the Supports using the Suspension System Adjusting Screws (MB-390039). Ensure all four screws are in contact with the Support and that Diametrically Opposing Support Lugs are equidistant from the Vacuum Vessel Wall.

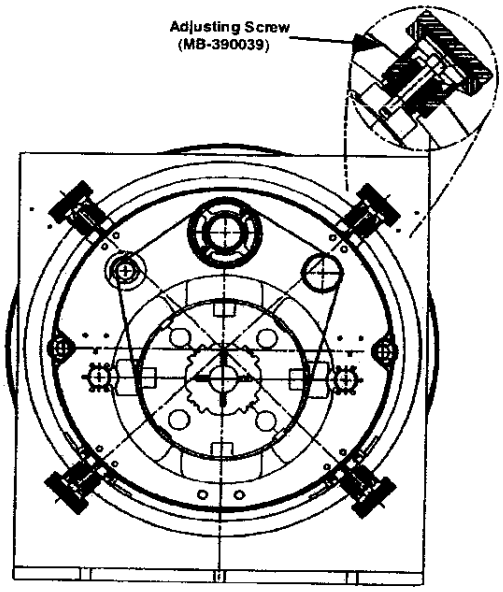

Technician(s) _____ Date 1/16/04

4.5 Insert the Sliding Support Assembly (ME-390042) in to the Vacuum Vessel and position at the IP End.

Technician(s) _____ Date 1/16/04

4.6 Install the Suspension System Adjusting Screws (MB-390039) and Washer (MA-390377) into the Vacuum Vessel to hold the Fixed Support Assembly in place. Coat all screw threads with Molybdenum disulfide prior to installation.

[redacted]

Technician(s) _____ Date 1/16/04

4.7 Adjust the Vertical and rotational alignment of the Supports using the Suspension System Adjusting Screws (MB-390039). Ensure all four screws are in contact with the Support and that Diametrically Opposing Support Lugs are equidistant from the Vacuum Vessel Wall.

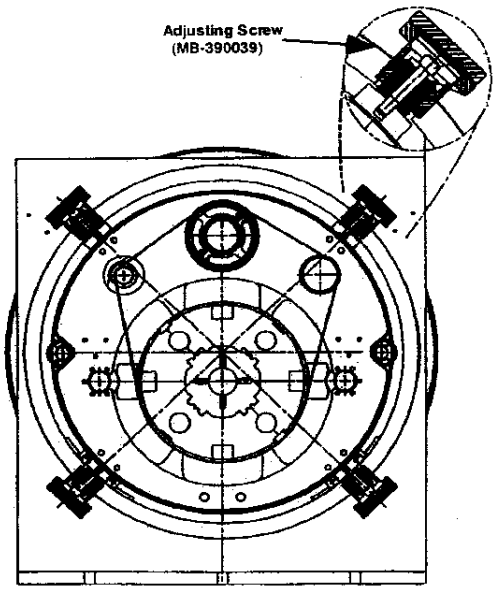

Technician(s) _____ Date 1/16/04

4.8 Assemble the Suspension System using the Fixed Support Assembly (ME-390041), the Sliding Support Assemblies (ME-390042) and the Tie Bar Assemblies (MC-390167). Insert Tie Bar Shims (MC-390118),(MB-390119) and (MB-390120) between the Sliding Support Assemblies (ME-390042) and the Tie Bar Assemblies (MC-390400) as required. (Reference drawing: ME-390525).

Technician(s) _____ Date 1/16/04

4.9 Measure the distance between the Suspension Rings at the bottom of the Threaded Rods. Install Threaded Rods after measurements.

Non-IP North to IP North 4187 mm

Non-IP South to IP South 4186.5 mm

Technician(s) _____ Date 1/16/04

4.10 Label the IP End Support and the Non-IP End Support. (Writing on the G-11 Support is acceptable).

Technician(s) _____ Date 1-7-04

4.11 Loosen each Suspension System Adjusting Screw (MB-390039) 1/2 turn and remove the Suspension System from the Vacuum Vessel.

Technician(s) _____ Date 1-7-04

4.12 Configure the Suspension Tooling for Q1 Assembly per Cryostat Layout Tooling & Assembly (ME-364604). Place Suspension Assembly on the tooling and make necessary adjustments to the tooling.

Technician(s) _____ Date 1-7-04

4.13 Assemble the Suspension Mounting Brackets (MD-390279) to the Support Assemblies.

Technician(s) _____ Date 1-7-04

4.14 Slide the Suspension System over the Cold Mass and place on tooling. The Suspension system may be disassembled during this step. Record shim sizes and locations prior to disassembly.

Note(s):

Ensure that the Suspension System is configured properly to the Cold Mass with respect to the IP and Non-IP Ends.

Technician(s) _____ Date 1-7-04

X 4.15 Verify locking collars exist only at Non-IP End support.

Lead Person _____ Date 2/13/04

4.16 Establish alignment between the Cold Mass and the Support system. Install shims between the Brass Slide Bars and the Stainless Steel Blocks on each support as needed.

TRR # 1648

Record Shim size and location below.

East-North	.070	**East-South**	.045
Center-North		**Center-South**	
West-North	.075	**West-South**	.045

Technician(s) _____ Date 2-8-04

X 4.17 Verify the Alignment of the Cold Mass and the Support System.

Crew Chief _____ Date 2/13/04

4.18 Weld the Cold Mass to the Outboard Cold Mass Brackets as per (ME-390525).

Weldor(s) _____ Date 2/11/04

5.0 Piping Assembly

Note(s):

Do not use a Strap Wrench on the Pipes.

5.1 Place the Cold Mass assembly on the insertion rail system.

Technician(s) _____ Date 2/13/04

5.2 Clean the Pipe Supports with Ethyl Alcohol (Fermi stock 1920-0550) and Kimwipes (Fermi stock 1660-2500) or equivalent.

Technician(s) _____ Date 2/14/04

5.3 Install Cold Mass Insulation per Cold Mass Insulation Installation (ME-390524).

Technician(s) _____ Date 2/14/04

5.4 Install the Pipe Supports (MD-390092)(Qty. 3) on the Cold Mass per Q1 Cryostat Assembly Internal Piping (ME-390174).

Note(s):

A Tie Bar may be disconnected, if necessary, from the Fixed Support Assembly to install the central two pipe supports.

PIPE SUPPORT ASSEMBLY

Technician(s) _____ Date 2/14/04

5.5 Install Pipe Anchor (MC-390486) on the Cold Mass per Q1 Cryostat Assembly - Internal Piping (ME-390174).

Technician(s) _____ Date 2/14/04

5.6 Using Pipe Supports (MD-390092) as a template, cut the blankets around the Pipe Support Feet and slit blankets circumferentially at the Pipe Supports.

Technician(s) _____ Date 2/14/04

5.7 Remove Pipe Supports (MD-390092) and blankets. Wrap blankets in plastic bag to keep clean for later use. Label blankets as they are removed for later positioning.

Technician(s) _____ Date 2/16/04

5.8 Install Pipe Supports (MD-390092) to same location as in step 5.4.

Technician(s) _____ Date 2/16/04

WELD RETAINING CLIPS INTO PLACE FOR PIPE SUPPORTS. (5.15) TRR #1617

5.9 Install Q1 Installation Tie Rod Assembly (MC-390638) and Tie Bar Retaining Clamp (MB-390136) as per Q1 Cryostat Assembly - Internal Piping (ME-390174).

Technician(s) _____ Date _____

5.10 Clean the Heat Exchanger Outer Shell Pipe (MD-390145), Pumping Line Pipe (MB-390147) and the Cool Down Pipe (MB-390146) with Ethyl Alcohol (Fermi stock 1920-0550) and Kimwipes (Fermi stock 1660-2500) or equivalent.

Technician(s) _____ Date 2-16-04

5.11 Slide the Heat Exchanger Outer Shell Pipe (ME-390176), Pumping Line Pipe (MB-390182) and the Cool Down Pipe (MB-390193) through all five supports.

Note(s):

Ensure the cross over hole in the Heat Exchanger Pipe is lined up with the elbow on the End Dome.

Technician(s) _____ Date 2/16/04

5.12 Clean the Pumping Line End Flange (MB-390032), the Cool Down Line End Flange (MB-390033) and the Heat Exchanger Outer Shell Flange (MB-390031) with Ethyl Alcohol (Fermi stock 1920-0550) and Kimwipes (Fermi stock 1660-2500) or equivalent.

Technician(s) _____ Date 2/16/04

REMOVE

TRR # 1617

5.13 Weld the Heat Exchanger Outer Shell Flange (MB-390031), the Pumping Line End Flange (MB-390032) and the Cool Down Line End Flange (MB-390033) to the ends of the corresponding pipes.

Weldor(s) _____ Date _____

5.14 Clean the Cold Mass and the Retainer Clips (MA-390103) with Ethyl Alcohol (Fermi stock 1920-0550) and Kimwipes (Fermi stock 1660-2500) or equivalent.

Technician(s) [signature] Date 2/16/04

MOVE TO AFTER 5.8 SNG

5.15 Weld the Retainer Clips (MA-390103) to the Cold Mass Outer Shell as per the Q2 Pipe Support Assembly (ME-390087) or Q1 Internal Piping Assembly (ME-390174).

Weldor(s) [signature] Date 2/16/04

DR# HGQ04-19

5.16 Position the End Dome Elbow, the Weld Adapter (MC-390278) and the Heat Exchanger Outer Shell.

Technician(s) [signature] Date 2/17/04

5.17 Weld the Outer Shell to the Weld Adapter (MC-390278).

Weldor [signature] Date 2-17-04

5.18 Weld the End Dome Elbow to the Weld Adapter (MC-390278).

Weldor [signature] Date 2-17-04

5.19 Assemble the Corrugated Tube Assembly (ME-390179).

Technician(s) [signature] Date 2/16/04

5.20 Insert the Corrugated Tube Assembly (ME-390179).

Technician(s) [signature] Date 2/16/04

5.21 Position the Heat Exchanger End Plate (MD-390178).

Technician(s) [signature] Date 2/17/04

5.22 Weld the Heat Exchanger End Plate (MD-390178) to the Outer Shell Pipe (MD-390177).

Weldor [signature] Date 2-17-04

5.23 Weld the Corrugated Tube Assembly (ME-390179) to the Heat Exchanger End Plate (MD-390178).

Weldor — Date: 2-17-04

weld collection pot TRR# 1617

5.24 Position the Q1 Pumping Line Pipe (MB-390183).

Technician(s) — Date: 2/17/04

Position collection pot

5.25 Weld the Q1 Pumping Line Pipe (MB-390183) to the Heat Exchanger Corrugated Tube (ME-390179).

Weldor — Date: 2/18/04

5.26 Position the Cooldown Line (MC-390193).

Technician(s) — Date: 2/17/04

5.27 Weld the Cooldown Line (MC-390193).

Weldor — Date: 2-17-04

weld collection pot

5.28 Weld the Q1 Cooldown Line (MC-390193), Q1 Pumping Line (ME-390182) and Heat Exchanger Outer Shell (ME-390175) to the Pipe Anchor (MC-390486).

Weldor(s) — Date: 2/18/04

5.29 Weld Pumping Line End Flange (MA-390032) to the Pumping Line Pipe (MD-390183).

Weldor(s) — Date: 2/18/04

5.30 Weld Cool Down Line End Flange (MA-390033) to the Cooling Line Pipe (MD-390146).

Weldor(s) — Date: 2/18/04

5.31 Insert 4.5k Intercept Line Pipes (MB-390192) per (ME-390208).

Technician(s) — Date: 2/18/04

5.32 Weld the Pipe Anchor (MC-390486) to the Cold Mass Skin.

Weldor — Date: 2/18/04

5.33 Weld the fixed collar to the 4.5k Intercept Line (MB-390192) per (ME-390208).

Weldor(s) Date 2/18/04

5.34 Pressure test the Cold Mass Assembly at 375 psi Nitrogen per Section 5034 of the Fermilab ES&H Manual and UG-100 of the Code.

Warning:

The test is to be performed after normal working hours and only personnel directly involved with the test will be present.

Inspector Date 2/19/04

5.35 Leak Check the Cold Mass Assembly. (This will include the Outer Shell Pipe (MD-390177)).

Part No.		DETERMINATION OF DETECTABLE LEAK							
PART NO.		SCALE UNITS BEFORE HELIUM PROBE	SCALE UNITS WHILE ENCLOSURE FLOODING	DETERMINATION OF MINIMUM DETECTABLE LEAK					
DATE TIME	OPERATOR'S LAST NAME			MDS ÷ ((Response - Bckgnd) ÷ Leak Value) = MDL					
	GDW	4DX1	4DX1	2	4DX5	4DX1	3.04×10^{-8}	3.5×10^{-10}	
									10

Inspector Date 2-23-04

5.36 Leak check 4.5k Intercept Lines (MB-390192).

Part No.		DETERMINATION OF DETECTABLE LEAK							
PART NO.		SCALE UNITS BEFORE HELIUM PROBE	SCALE UNITS WHILE ENCLOSURE FLOODING	DETERMINATION OF MINIMUM DETECTABLE LEAK					
DATE TIME	OPERATOR'S LAST NAME			MDS ÷ ((Response - Bckgnd) ÷ Leak Value) = MDL					
	GDW	4DX1	4DX1	2	2	4DX1	3.04×10^{-8}	3.8×10^{-10}	

Inspector Date 2-23-04

Q1 LQXA Cryostat Final Assembly

LHC Serial No.: LQXA01-0
Notes:

6.0 Shield Assembly

6.1 Lift the Cold Mass Assembly and place the IP End (ME-390433) and Non-IP End (ME-390434) on the Insertion Rails. Lower the Cold Mass back onto the rails ensuring the holes in the Shield Sections line up with Support Rollers.

Technician(s) _____ Date 2-25-04

6.2 Insert the Mid Section (ME-390435) and the Support Bands (MD-390083).

Technician(s) _____ Date 2-25-04

6.3 Assemble the bottom half of the shield. Leave all bolts loose. Spray all screw threads with Molybdenum.

Technician(s) _____ Date 2-25-04

6.4 Assemble the Cooling Tubes (MD-390431) to the Bottom Half of the Shield.

Technician(s) _____ Date 2-25-04

6.5 Lift the Cold Mass and place the Shield Inner and Outer MLI Blankets (ME-390487 & ME-390488) onto the Insertion Rails in the correct orientation.

Note(s):
Place the Outer Blanket (ME-390314) on the Rails first.

Technician(s) _____ Date 2-25-04

6.6 Lower the Cold Mass onto the rails. Ensure the slits in the blankets line up with Support Rollers.

Technician(s) _____ Date 2/26/04

6.7 Install the Cold Mass MLI Blankets per (ME-390524) and in the same position as Step 5.6.

Technician(s) _____ Date 2/26/04

6.8 Install the Cold Mass Insulation Mounting Lug Covers (MC-390496).

Technician(s) _____ Date 2/26/04

6.9 Cut and install the pipe MLI blankets per Q1 Piping Insulation (ME-390541).

Technician(s) _____ Date 2/26/04

6.10 Install the Upper Shield per Q1 Thermal Shield Assembly (ME-390429). Spray all screw threads with Molybdenum.

Technician(s) _____ Date 2-26-04

6.11 Install the Shield Blankets (ME-390487 & ME-390488). ~~Cutouts will have to be made for the Upper Support Lugs.~~ ALREADY CUT!

Technician(s) _____ Date 3/2/04

TAR# 1617

INSTALL Q1 THERMAL SHIELD COOLING PIPE CROSSOVER (390466) TO Q1 THERMAL SHIELD COOLING TUBE WELDMENT (390431) WELD INTO PLACE & LEAK CHECK.

TAR NEEDED SNG 3/1/04

SUPER INSULATE Q1 PUMPING LINE COLLECTION VOLUME ASSY (390185).

~~INSTALL TARGET HOLDERS 390211, 390540, 390539 AS TO PRINT 390127.~~

~~INSTALL CONFLAT FLANGES 390374 & HARDWARE AS TO PRINT 390127.~~

7.11 WELD HELIUM GUARD MOUNTING PLATE 390724 TO VESSEL AS TO PRINT 390122.

7.0 Cold Mass Insertion into the Vacuum Vessel

7.1 Install ~~Green~~ PIG Putty between the Vacuum Vessel and the Insertion Rails.

Technician(s) _____ Date 3/2/04

7.2 Install the Cold Mass Pull-in Tooling.

Technician(s) _____ Date 3/2/04

7.3 Mount the Pneumatic Winch to floor on the West side of the Vacuum Vessel.

Technician(s) _____ Date 3/2/04

7.4 Connect the cable to the Pull-in Tooling.

Technician(s) _____ Date 3/2/04

7.5 Pull the Cold Mass Assembly into the Vacuum Vessel.

Technician(s) _____ Date 3/2/04

7.6 When the Cold Mass is fully inserted, install the Suspension System Adjusting Screws (MB-390039).

Technician(s) _____ Date 3/5/04

7.7 Adjust the Suspension System Adjusting Screw (MB-390039) as needed to center the Cold Mass in the Vacuum Vessel.

Technician(s) _____ Date 3/5/04

TRR# 1617

7.8 INSTALL CONFLAT FLANGES (390374) W/ COPPER GASKET (390375) & BOLT SET (390376) TO CRYOSTAT USING PRINT (390127 D).

7.9 INSTALL TARGETS 390539, 390540, & 390211 ASPER PRINT 390127 D.

7.10 INSTALL FIDUCIAL(S) (390426) (SOCKET CUP) AS PER 390127D.

7.11

8.0 Final Electrical Inspection

8.1 Perform an electrical inspection on each of the Individual Quadrants and the Cold Mass. Refer to the Valhalla and Leader Free Standing Coil Measurement Procedure (ES-292306).

To measure the Resistance of a Q1 Cold Mass:

1. Use Valhalla Scientific 4300B digital micro-ohmmeter.
2. Set Test Current to 1 amp.
3. Set Scale to 2V full scale.
4. Turn temperature compensation on.
5. Turn test current off.
6. Connect I_{HI} to Q4 inner power lead as shown in figure.
7. Connect I_{LO} to Q3 inner power lead as shown in figure.
8. Turn test current on.
9. Connect V_{HI} and V_{LO} to voltage taps as shown in resistance table.
10. To measure Total with leads, connect V_{HI} to Q4 power lead and V_{LO} to Q3 power lead.
11. Read resistance and record in traveler.

Q1 Cold Mass Electrical Measurements

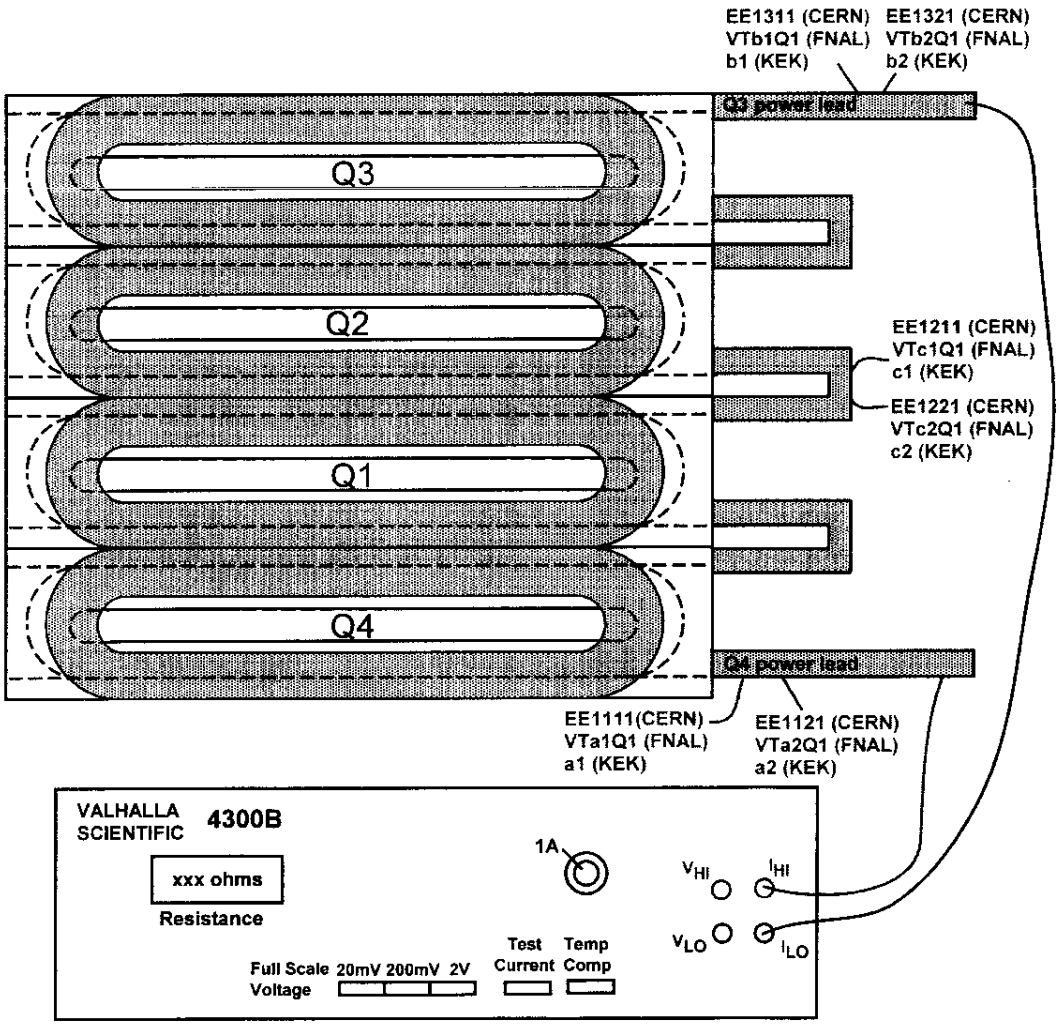

(Q1) Resistance				Nominal to Ω
Voltage Tap Serial Numbers				Total Resistance
Connect	Fermi	CERN	KEK	
V_{HI}	VTa1Q1	EE1111	a1	340.8 Ω
V_{LO}	VTc1Q1	EE1211	c1	
V_{HI}	VTc1Q1	EE1211	c1	340.9 Ω
V_{LO}	VTb1Q1	EE1311	b1	
V_{HI}	VTa1Q1	EE1111	a1	681.7 Ω
V_{LO}	VTb1Q1	EE1311	b1	
				Total Resistance with Leads
V_{HI}	Q4 Power Lead			682.1 Ω
V_{LO}	Q3 Power Lead			

Technician(s) 3/9/04 Date

Check resistance of Redundant Voltage Taps.

Q1 Redundant Voltage Taps				
Connect	Fermi	CERN	KEK	Resistance
V_{HI}	VTa2Q1	EE1121	a2	340.9 Ω
V_{LO}	VTc2Q1	EE1221	c2	
V_{HI}	VTc2Q1	EE1221	c2	341.0 Ω
V_{LO}	VTb2Q1	EE1321	b2	

Technician(s) 3/9/04 Date

To measure Ls and Q of a Q1 Cold Mass:

1. Use Hewlett Packard HP4284A digital LCR meter.
2. Turn line switch to on. The words "Measurement Display" should now be highlighted in the upper left corner of the display screen.
3. Use cursor buttons (shown in figure with arrows) to toggle down until "function" is highlighted near the upper left corner of the display screen.
4. Push the lowest of the five buttons to the right of display 3 times. (this button is shaded gray in the figure) The line in the display screen next to the second button down should now read "Ls-Q" and "function" near the upper left corner of the display should have the option "Ls-Q" chosen.
5. Scroll to "integer" using the cursor buttons. "Integer" will have the option "medium" chosen.
6. Press the 3rd button of five. The word "medium" should change to "long".
7. Connect H_{cur} to Q4 power lead as shown in figure.
8. Connect L_{cur} to Q3 power lead as shown in figure.
9. Connect H_{pot} and L_{pot} to voltage taps as shown in table.
10. Read Ls and Q from display and record in traveler.

Q1 Cold Mass Electrical Measurements

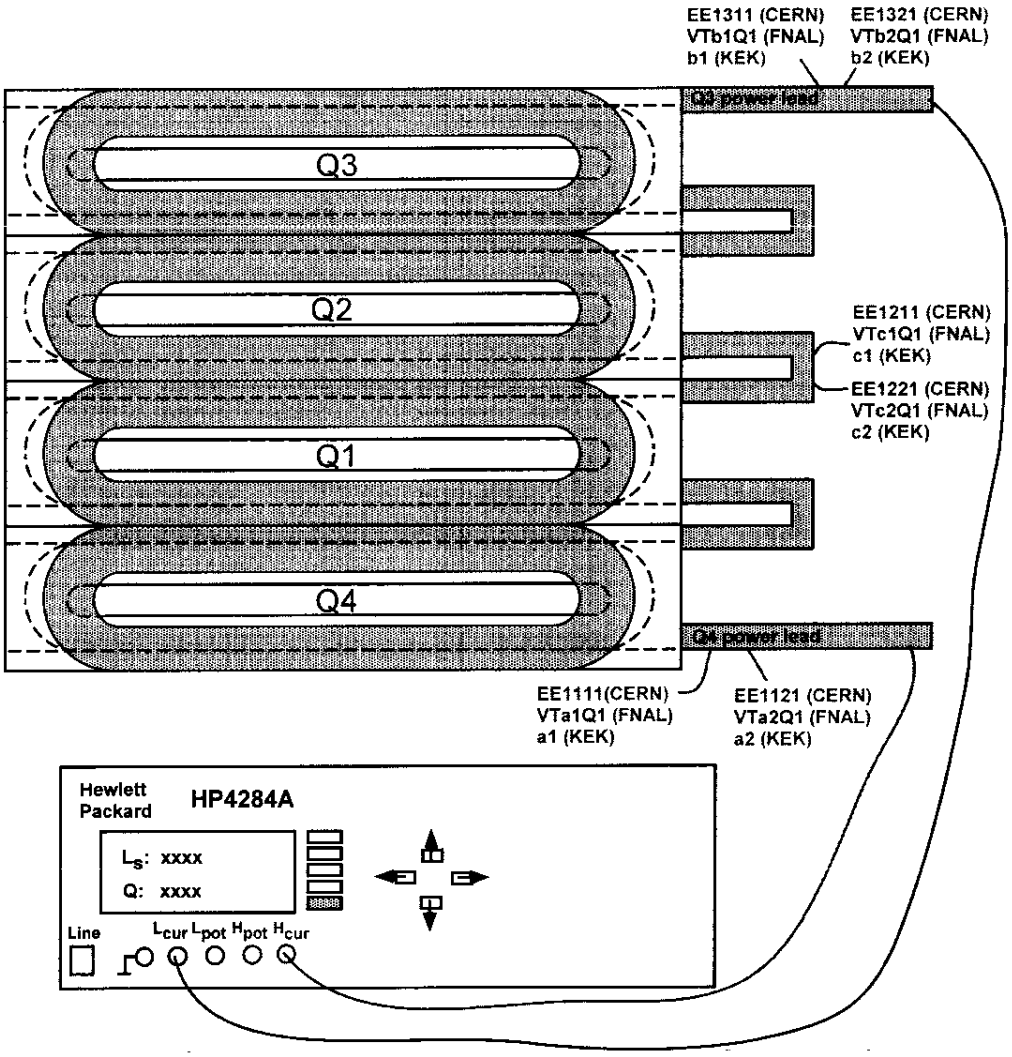

(Q1) Inductance				Nominal ~ to mH
Voltage Tap Serial Numbers				Total Inductance
Connect	Fermi	CERN	KEK	
H_{POT}	VTa1Q1	EE1111	a1	15.996 mH
L_{POT}	VTc1Q1	EE1211	c1	
H_{POT}	VTc1Q1	EE1211	c1	16.083 mH
L_{POT}	VTb1Q1	EE1311	b1	

H_{POT}	VTa1Q1	EE1111	a1	32.019 H
L_{POT}	VTb1Q1	EE1311	b1	

(Q1) Q-Factor				Nominal ~ to
Voltage Tap Serial Numbers				Total Q
Connect	Fermi	CERN	KEK	
H_{POT}	VTa1Q1	EE1111	a1	1.1
L_{POT}	VTc1Q1	EE1211	c1	
H_{POT}	VTc1Q1	EE1211	c1	1.1
L_{POT}	VTb1Q1	EE1311	b1	

H_{POT}	VTa1Q1	EE1111	a1	1.1
L_{POT}	VTb1Q1	EE1311	b1	

Technician(s) _____ Date 3/9/04

To measure the resistance of a Thermometer (RTD):

1. Use Hewlett Packard HP3457A digital multimeter.
2. Record temperature of building within +/- 5 degrees.
3. Press line button to turn line on.
4. Connect wires as shown in Figure below.
   U+ (Black) to Sense HI
   I+ (Yellow) to Input HI
   U- (Red) to Sense LO
   I- (Green) to Input LO
5. Push blue button (function key) once.
6. Push OHMF button.
7. Verify arrow in readout is above the 4WΩ (meaning a 4 wire resistance measurement).
8. Read resistance in ohms and record in traveler.

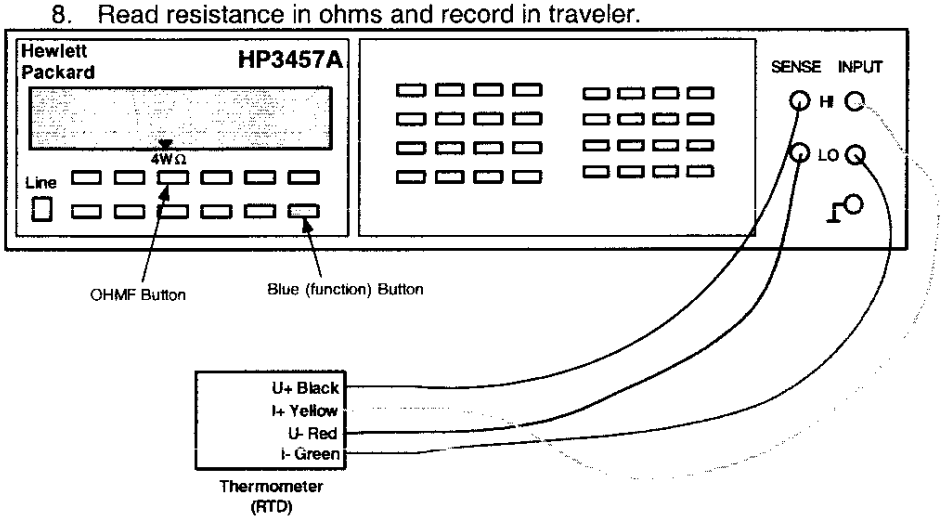

To measure the resistance of a Cryogenic (Warm-up) Heater

1. Use Hewlett Packard HP3457A digital multimeter.
2. Record temperature of building within +/- 5 degrees.
3. Press line button to turn line on.
4. Connect wires as shown in Figure below.
5. Push blue button (function key) once.
6. Push OHMF button.
7. Verify arrow in readout is above the 4WΩ (meaning a 4 wire resistance measurement).
   Note: Although this is technically a 4 wire measurement, it is effectively a 2 wire measurement, since there are only 2 wires connected to each heater.
8. Read resistance in ohms and record in traveler.

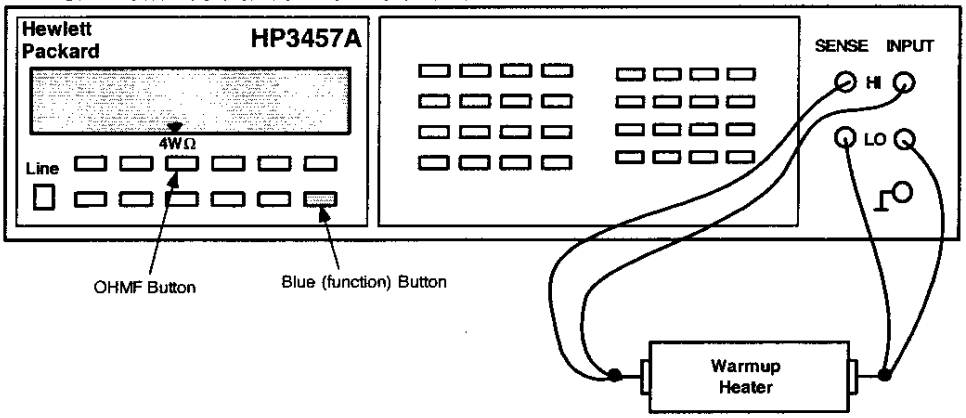

Q1 - RTD's and Cryogenic (warm-up) Heaters			
Component	**Fermi**	**CERN**	**Resistance**
Q1 RTD, primary	TaQ1	TT8311	73.678 Ω
Q1 RTD, redundant	TbQ1	TT8321	66.774 Ω
Q1 Cryogenic (warm-up) Heater (LE) - wire at top (CERN #1 I+)	W1aQ1	EH8311+	17.437 Ω
Q1 Cryogenic (warm-up) Heater (LE) - wire at bottom (CERN #1 I-)	W2aQ1	EH8311-	
Q1 Cryogenic (warm-up) Heater (Non-LE) - wire at top (CERN #2 I+)	W1bQ1	EH8321+	17.495 Ω
Q1 Cryogenic (warm-up) Heater (Non-LE) - wire at bottom (CERN #2 I-)	W2bQ1	EH8321-	

Technician(s) _____ Date 3/9/04

Using the Hewlett Packard HP3457A digital multimeter, measure the Protection (Strip) Heater Resistance for Q1.

Q1 Protection (Strip) Heater Resistance					
Fermi	**CERN**	**KEK**	**Description**	**Limit**	**Resistance**
H1aQ1	**YT1111+**	**HA1**	**Circuit A**	Ω	29.368 Ω
H2aQ1	**YT1111-**	**HA2**			
H1bQ1	**YT1121+**	**HB1**	**Circuit B**	Ω	29.385 Ω
H2bQ1	**YT1121-**	**HB2**			

Technician(s) _____ Date 3/9/04

8.2 Using the HP4284A, connect power thru the corrector Power Leads (HA1 and HB1 to measure Q1-H1 or VA1 and VB1 to measure Q1-V1). Connect the Sense Leads as shown in table below and record resistance.

MCBX Corrector Coil Taps			
Component	**FermiLab Label**	**CERN Label**	**Resistance**
Q1-H1	**VTH1**	**EE8121**	22.4211
	HA1	**N/A**	~~.8502~~ Ω
Q1-V1	**VTV1**	**EE8111**	
	VA1	**N/A**	18.5916 Ω

Technician(s) 3/9/04 Date

TRR# 1617 Add Step

(2) Cut leads as per ME-369844 Q1 Module Assy, (From End of spider) (323.24 mm)

(1) Measure, mark and strip leads of insulation/Kapton, (~103mm or 4in for Randy & Steve) Clamp leads w/ lead clamp block tooling.

(3) Fuse Ends. (Welder Signoff)

3/9/04

Randy Evans

9.0 Production Complete

9.1 Process Engineering verify that the LHC Cryostat Assembly Traveler (5520-TR-333755) is accurate and complete. This shall include a review of all steps to ensure that all operations have been completed and signed off. Ensure that all Discrepancy Reports, Nonconformance Reports, Repair/Rework Forms, Deviation Index and dispositions have been reviewed by the Responsible Authority for conformance before being approved.

Comments:

Rev "None" was issued after work was completed in the DRAFT Revision.

Some dates in this traveler will predate the signed revision date, but were included in this traveler for consistency.

LHC Traveler Coordinator

Process Engineering/Designee

Date

ORIGINAL

TD/ENGINEERING & FABRICATION

PARTS KIT REQUEST

IMPORTANT NOTES:
1) MAGNET NUMBER MUST BE FILLED IN.
2) ONLY ONE FORM PER MAGNET.
3) PARTS COORDINATOR OR DESIGNEE MUST SIGN THIS FORM.
4) MATERIAL CONTROL WILL ISSUE PARTS AND RECORD ROUTING NUMBER.
5) ANY QUANTITIES NOT AVAILABLE WILL HAVE COMMENTS RETURNED TO THE PARTS COORDINATOR FOR REVIEW.

DELIVER TO_____ICB

BUDGET CODE: ~~DBL~~ LED

PROJECT NUMBER: 300
TASK NUMBER: 1.1.1.3 ~~A~~ 4

MAGNET NUMBER: LQXA 01

RELEASED BY

PRODUCTION SIGNATURE: J. Szostak x2003

TODAYS DATE: 24-Nov-03

NEED DATE: 8-Dec-03

ISSUE VERIFICATION

MATERIAL CONTROL SIGNATURE: [signature]

DATE ISSUED TO STOCKROOM: 11/24/03

THIS KIT LIST IS FOR

ME-390127	D	Q1 CRYOSTAT GENERAL ASSEMBLY

PART NUMBER	REV	DESCRIPTION	REQUIRED QTY/ASS'Y		MATERIAL CONTROL: QTY FILLED OUT BY STOCK ROOM: ISSUED	ROUTE FORM	NOT AVAIL	FILLED OUT BY EXPEDITER: DATE AVAIL	COMMENTS TO PRODUCTION MANAGER	PROD VERIFY PART	SUPT. VERIFY PART
390039	B	ADJUSTING SCREW	8	EA	8	78905		11/24/03	JA4 Bm - 207 pcs		
390211	B	TARGET HOLDER	4	EA	4	79751			R10,11 - 94 pcs		
390374	*	Blank Non-Rotatable Conflat Flange, 4.62" OD 304 SS	8	EA	8	78981			R8,3,4 - 205 pcs		
390375	*	COPPER GASKET	8	EA	8	78244			JB4 6m - 204 pcs		
390376	*	BOLT SET, HEX HEAD, 5/16 - 24 x 1.25 w/ WASHER	80	EA	80	72306			- 2044 pcs		
390377	*	WASHER .656" ID x 1.36" OD x .13" THK, STN STEEL	8	EA	8	77846			- 207 pcs		
390426	*	REFERENCE SOCKET CUP (Furnished by CERN)	8	EA	8	77884			R1,3,5 - 212 pcs		
390539	*	TARGET HOLDER, RIGHT	2	EA	2	79556			R8,S1,L3 - 52 pcs		
390540	*	TARGET HOLDER, LEFT	2	EA	2	79555			R8,S1,L5 - 52 pcs		
390643	B *	Q1 NON-IP END ALIGNMENT FIDUCIAL SPACER	2	EA	2	80233			R1,2,4 - 18 pcs		
393021	*	M16-2 x 70.0 mm LG HEX SHCS, 18-8 STN STEEL	8	EA	8	77840			JB4 6m - 257 pcs		
393024	*	M6 FLAT WASHER, 18-8 STN STEEL	32	EA	32	78891			- 824 pcs		
393036	*	M10-1.5 x 25mm LG HEX SHCS 18-8 STN STEEL	24	EA	24	77899			- 656 pcs		
393045	*	M6-1.0 x 35mm LG HEX SHCS 18-8 STN STEEL	16	EA	16	78886			- 428 pcs		
393048	*	M8 x 30mm LG HEX SPRING PIN 18-8 STN STEEL	8	EA	8	78887			- 214 pcs		
393220	*	M10 LOCK WASHER, 18-8 STN STEEL	24	EA	24	80024			- 808 pcs		
390122	D	VACUUM VESSEL ASSEMBLY	ICB	HAS				—			

RETURN THIS COMPLETED PARTS KIT REQUEST WITH THE ISSUED PARTS TO THE PARTS COORDINATOR.

[signature] 12/3/03 : STOCKROOM SIGNATURE AND DATE

TRAVELER NO. TR-333755

KIT IS COMPLETE (PARTS COORDINATOR SIGNATURE): [signature] BADGE # 02943C

DATE 12/3/03

ORIGINAL

ORIGINAL

TD/ENGINEERING & FABRICATION

PARTS KIT REQUEST

IMPORTANT NOTES:
1) MAGNET NUMBER MUST BE FILLED IN.
2) ONLY ONE FORM PER MAGNET.
3) PARTS COORDINATOR OR DESIGNEE MUST SIGN THIS FORM.
4) MATERIAL CONTROL WILL ISSUE PARTS AND RECORD ROUTING NUMBER.
5) ANY QUANTITIES NOT AVAILABLE WILL HAVE COMMENTS RETURNED TO THE PARTS COORDINATOR FOR REVIEW.

DELIVER TO _____ ICB

BUDGET CODE: ~~LOR~~ LCD

PROJECT NUMBER: 300
TASK NUMBER: 1.1.1.3 & 4

RELEASED BY

MAGNET NUMBER: LQXA 01

PRODUCTION SIGNATURE: J. Szostak x2003

TODAYS DATE: 24-Nov-03

NEED DATE: 8-Dec-03

ISSUE VERIFICATION

MATERIAL CONTROL SIGNATURE: [illegible]

DATE ISSUED TO STOCKROOM: 11/24/03

THIS KIT LIST IS FOR

ME-390127	D	Q1 CRYOSTAT GENERAL ASSEMBLY

PART NUMBER	REV	DESCRIPTION	REQUIRED QTY/ASS'Y		MATERIAL CONTROL: QTY FILLED OUT BY STOCK ROOM: ISSUED	ROUTE FORM	NOT AVAIL	FILLED OUT BY EXPEDITER: DATE AVAIL	COMMENTS TO PRODUCTION MANAGER	PROD VERIFY PART	SUPT. VERIFY PART
ME-390173	*	Q1 INSULATED SHIELD AND PIPING ASSEMBLY									
390487	*	Q1 SHIELD MLI INNER BLANKET	1	EA	1	79869		11/24/03	Site 38 - 5 pcs.		
390488	*	Q1 SHIELD MLI OUTER BLANKET	1	EA	1	79870		↓	↓ - 5 pcs.		
ME-390429	A	Q1 THERMAL SHIELD ASSEMBLY									
390083	A	SUPPORT BAND	4	EA	4			11/24/03	PIN - 112 pcs.		
390086		RETAINER	16	EA	16	77131			IB4 Bin - 370 pcs.		
390316	A	COOLING PIPE BRACKET	4	EA	4	77195			- 92 pcs.		
390317		COOLING PIPE CLAMP	8	EA	8	77196			- 191 pcs.		
390373		ALUMINUM SPACER	32	EA	32	76879			- 944 pcs.		
390378		RETAINING WASHER	232	EA	232	79003			- 6020 pcs.		
390431	A	COOLING TUBE WELDMENT	2	EA	2	79080			PIN - 18 pcs.		
390433		IP END SECTION	2	EA	2	79610			IB4 - 18 pcs.		
390434		NON-IP END SECTION	2	EA	2	79611			PIN - 18 pcs.		
390435		Q1 - Q3 CENTER SECTION	2	EA	2	79382			↓ - 36 pcs.		
390466		COOLING PIPE CROSSOVER	1	EA	1	79209			R8,S1,L2 - 9 pcs.		
390467		COOLING PIPE CROSSOVER CONNECTOR	2	EA	2	78930			IB4 Bin - 18 pcs.		
393018		M8 x 25.0mm LG SHCS, 18-8 STN STEEL	8	EA	8	76747			- 189 pcs.		
393019		M8 x 45.0mm LG SHCS, 18-8 STN STEEL	8	EA	8	76748			- 68 pcs.		
393023		M8 HEX NUT, 18-8 STN STEEL	16	EA	16	76848			- 318 pcs.		
393025		M8 FLAT WASHER, 18-8 STN STEEL	16	EA	16	76745			- 1086 pcs.		
393027		M8 LOCK WASHER, 18-8 STN STEEL	16	EA	16	76744			- 1103 pcs.		
393028		BUTTON HEAD CAP SCREW, M5 x 16.0 LG	232	EA	232	76826		↓	↓ - 5965 pcs.		
ME-390174	B	Q1 INTERNAL PIPING ASSEMBLY (SEPARATE SHEET)									

RETURN THIS COMPLETED PARTS KIT REQUEST WITH THE ISSUED PARTS TO THE PARTS COORDINATOR.

[illegible] 11/24/03 : STOCKROOM SIGNATURE AND DATE

TRAVELER NO. TR-333755

KIT IS COMPLETE (PARTS COORDINATOR SIGNATURE) John J. Szostak BADGE # 02943C

DATE 12/3/03

TD/ENGINEERING & FABRICATION

PARTS KIT REQUEST

ORIGINAL

IMPORTANT NOTES:
1) MAGNET NUMBER MUST BE FILLED IN.
2) ONLY ONE FORM PER MAGNET.
3) PARTS COORDINATOR OR DESIGNEE MUST SIGN THIS FORM.
4) MATERIAL CONTROL WILL ISSUE PARTS AND RECORD ROUTING NUMBER.
5) ANY QUANTITIES NOT AVAILABLE WILL HAVE COMMENTS RETURNED TO THE PARTS COORDINATOR FOR REVIEW.

DELIVER TO_____ICB

BUDGET CODE: ~~LCI~~ LCD

PROJECT NUMBER: 300
TASK NUMBER: 1.1.1.3.K4

MAGNET NUMBER: LQXA 01

RELEASED BY

PRODUCTION SIGNATURE: J. Szostak x2003

TODAYS DATE: 24-Nov-03

NEED DATE: ~~8~~-Dec-03 11

ISSUE VERIFICATION

MATERIAL CONTROL SIGNATURE: Marsha Stewart

DATE ISSUED TO STOCKROOM: 11/24/03

THIS KIT LIST IS FOR

ME-390174	B	Q1 CRYOSTAT ASSEMBLY - INTERNAL PIPING

	PART NUMBER	REV	DESCRIPTION	REQUIRED QTY/ASS'Y		MATERIAL CONTROL: QTY FILLED OUT BY STOCK ROOM: ISSUED	ROUTE FORM	NOT AVAIL	FILLED OUT BY EXPEDITER: DATE AVAIL	COMMENTS TO PRODUCTION MANAGER	PROD VERIFY PART	SUPT. VERIFY PART
	390033	B	COOLDOWN LINE END FLANGE	1	EA	1	77028		11/24/03	JB4 Bin - 63 pcs.		
	390032	B	PUMPING LINE END FLANGE	1	EA		77210			- 79 pcs.		
MD	390092	A	Q1 - Q3 PIPE SUPPORT ASSEMBLY	3	EA	3	N/A			PIN - 54 pcs.		
	390136	*	TIE BAR RETAINING CLAMP	4	EA	4	77132			JB4 Bin - 109 pcs.		
	390192	*	Q1 4.5K INTERCEPT LINE TUBE	3	EA	3	80982		12/1/03	JB4 - 3 pcs.		
ME	390193	A	Q1 COOLDOWN LINE WELDMENT	1	EA	1	N/A		11/24/03	PIN - 9 pcs.		
	390278	*	WELD CONNECTOR ADAPTER	1	EA	1	79471			R1,S1,L3 - 18 pcs.		
	390379	A	INTERCEPT LINE PIPE STOP	6	EA	6	78894			JB4 Bin - 192 pcs.		
	390486	*	Q1 / Q3 PIPE ANCHOR	1	EA	1	79387			R8,S1,L4 - 18 pcs.		
	MC-390638	*	Q1 / Q3 INSTALLATION TIE ROD ASSEMBLY									
	390639	*	Q1 & Q3 INSTALLATION TIE-ROD SHORT THREADED ROD	2	EA	2	80880		12/1/03	JB4 - 2 pcs.		
	393046	*	JAM NUT (LH)	4	EA	4	80074		11/24/03	JB4 Bin - 122 pcs.		
	393225	*	STD ANSI HEX THIN JAM NUT 1/2-13 UNC	8	EA	8	80073			- 289 pcs.		
	393226	*	STD HEX COUPLING NUT 1/2-13 UNC (RH-LH)	4	EA	4	80075			- 120 pcs.		
MD	393227	*	THREADED ROD 1/2-13 UNC - 24 x 6 FT LONG	2	EA	2	80081			R7,2,4 - 60 pcs.		
	393228	*	THREADED ROD 1/2-13 UNC - 24 (LH) x 3 FT LONG	2	EA	2	80072			R1,2,3 - 60 pcs.		
	393017	*	M6 x 45.0mm LG HEX SHCS, 18-8 STN STEEL	4	EA	4	77346		11/24/03	JB4 Bin - 68 pcs.		
	393022	A	M6 HEX NUT, 18-8 STN STEEL	4	EA	4	78236			- 70 pcs.		
	393024	*	M6 FLAT WASHER 18-8 STN STEEL	4	EA	4	78891			- 824 pcs.		
	393026	*	M6 LOCK WASHER 18-8 STN STEEL	4	EA	4	77850			- 68 pcs.		
	ME-390541	*	Q1 PIPING INSULATION									
	390542	*	Q1 / Q3 MLI END BLANKET	1	EA	1	N/A		11/24/03	R1,S3,L2 - 20 pcs.		
ME	390543	*	Q1 / Q3 MLI MID BLANKET	1	EA	1	N/A			SKC 38 - 10 pcs.		
ME	390544	*	Q1 MLI IP END BLANKET	1	EA	1	N/A			- 5 pcs.		
	ME-390525	*	Q1 COLD MASS ASSEMBLY (SEPARATE SHEET)									

RETURN THIS COMPLETED PARTS KIT REQUEST WITH THE ISSUED PARTS TO THE PARTS COORDINATOR.

12/17/03 : STOCKROOM SIGNATURE AND DATE

TRAVELER NO. TR-333755

KIT IS COMPLETE (PARTS COORDINATOR SIGNATURE): John J. Szostak BADGE # 02943C

DATE 12/17/03

TD/ENGINEERING & FABRICATION

PARTS KIT REQUEST

ORIGINAL

IMPORTANT NOTES:

1) MAGNET NUMBER MUST BE FILLED IN.
2) ONLY ONE FORM PER MAGNET.
3) PARTS COORDINATOR OR DESIGNEE MUST SIGN THIS FORM.
4) MATERIAL CONTROL WILL ISSUE PARTS AND RECORD ROUTING NUMBER.
5) ANY QUANTITIES NOT AVAILABLE WILL HAVE COMMENTS RETURNED TO THE PARTS COORDINATOR FOR REVIEW.

MAGNET NUMBER: LQXA 01

RELEASED BY

PRODUCTION SIGNATURE: J. Szostak x2003

TODAYS DATE: 24-Nov-03

NEED DATE: 8-Dec-03

DELIVER TO_____ICB

BUDGET CODE: ~~DC~~ LCD

PROJECT NUMBER: 300

TASK NUMBER: 1.1.1.3.~~7~~ 4

ISSUE VERIFICATION

MATERIAL CONTROL SIGNATURE: Marsha Atkinson

DATE ISSUED TO STOCKROOM: 11/24/03

THIS KIT LIST IS FOR

ME-390174	B	Q1 CRYOSTAT ASSEMBLY - INTERNAL PIPING

PART NUMBER	REV	DESCRIPTION	REQUIRED QTY/ASS'Y		MATERIAL CONTROL: QTY FILLED OUT BY STOCK ROOM: ISSUED	ROUTE FORM	NOT AVAIL	FILLED OUT BY EXPEDITER: DATE AVAIL	COMMENTS TO PRODUCTION MANAGER	PROD VERIFY PART	SUPT. VERIFY PART
ME-390182	*	Q1 PUMPING LINE WELDMENT									
390183	*	Q1 PUMPING LINE PIPE	1	EA	1	80880		11/24/03	PIN - 9 pcs.		
390184	*	Q1 PUMPING LINE RETURN FITTING	1	EA	1	80036		↓	R73,2 - 10 pcs.		
390185	*	Q1 IP END COLLECTION POT WELDMENT	1	EA	1	79584		↓	R7,82,L2 - 9 pcs.		
ME-390175	*	Q1 HEAT EXCHANGER ASSEMBLY									
ME-390176	*	OUTER TUBE WELDMENT									
390031	B	END FLANGE	1	EA	1	77209		11/24/03	IP4 Bin - 82 pcs.		
390177	*	OUTER SHELL PIPE	1	EA	1	79498		↓	PIN - 9 pcs.		
390178	*	END PLATE	1	EA	1	79644		↓	R1,2,3 - 18 pcs.		
ME-390179	*	CORRUGATED TUBE ASSEMBLY									
390028	*	CORRUGATED TUBE SUPPORT	6	EA	6	77647		11/24/03	T9,2 - 148 pcs.		
390029	A	CORRUGATED TUBE RESTRICTOR	1	EA	1	77224		↓	R9,S1,L4 - 62 pcs.		
390393	*	CORRUGATED TUBE WELDMENT	1	EA	1	79282		↓	PIN - 9 pcs.		

RETURN THIS COMPLETED PARTS KIT REQUEST WITH THE ISSUED PARTS TO THE PARTS COORDINATOR.

12/3/03 : STOCKROOM SIGNATURE AND DATE

TRAVELER NO. TR-333755

KIT IS COMPLETE (PARTS COORDINATOR SIGNATURE): John J. Szostak BADGE # 02943C

DATE 12/3/03

ORIGINAL

TD/ENGINEERING & FABRICATION

PARTS KIT REQUEST

IMPORTANT NOTES:
1) MAGNET NUMBER MUST BE FILLED IN.
2) ONLY ONE FORM PER MAGNET.
3) PARTS COORDINATOR OR DESIGNEE MUST SIGN THIS FORM.
4) MATERIAL CONTROL WILL ISSUE PARTS AND RECORD ROUTING NUMBER.
5) ANY QUANTITIES NOT AVAILABLE WILL HAVE COMMENTS RETURNED TO THE PARTS COORDINATOR FOR REVIEW.

MAGNET NUMBER: LQXA 01

RELEASED BY

PRODUCTION SIGNATURE: J. Szostak x2003

TODAYS DATE: 24-Nov-03

NEED DATE: 8-Dec-03

DELIVER TO _____ ICB

BUDGET CODE: ~~LCP~~ LCD

PROJECT NUMBER: 300
TASK NUMBER: 1.1.1.3.~~3~~ 4

ISSUE VERIFICATION

MATERIAL CONTROL SIGNATURE: Marsha Schmidt

DATE ISSUED TO STOCKROOM: 11/24/03

THIS KIT LIST IS FOR

ME-390525	D	Q1 SUSPENSION SYSTEM INSTALLATION

PART NUMBER	REV	DESCRIPTION	REQUIRED QTY/ASS'Y		MATERIAL CONTROL: QTY FILLED OUT BY STOCK ROOM: ISSUED	ROUTE FORM	NOT AVAIL	FILLED OUT BY EXPEDITER: DATE AVAIL	COMMENTS TO PRODUCTION MANAGER	PROD VERIFY PART	SUPT. VERIFY PART
ME-390041	D	FIXED SUPPORT ASSEMBLY									
390043	B	SUSPENSION SYSTEM SUPPORT RING ASSEMBLY	1	EA	1	76906		11/24/03	NT02407 - 11 pcs.		
390047	~~A~~ B	SUSPENSION SYSTEM SUPPORT PIN	2	EA	2	76914		↓	R8.52.L4 - 106 pcs.		
~~390050~~	~~A~~	~~Q2P1 SUSPENSION SYSTEM SLIDE BEARING~~	~~4~~	~~EA~~					~~Op. 390093 - 884~~		
390275	A	SUSPENSION SYSTEM SUPPORT PIN SHIM - 1mm	8	EA	8	76911		11/24/03	IB4 Bin - 168 pcs.		
390276	*	SUSPENSION SYSTEM SUPPORT PIN SHIM - 0.5mm	8	EA	8	76910		↓	- 168 pcs.		
390277	*	SUSPENSION SYSTEM SUPPORT PIN BOLTS	8	EA	8	76913			- 415 pcs.		
390480	*	SUSPENSION SYSTEM SUPPORT PIN SHIM 0.13 mm	8	EA	8	79121			R2.52.L4 - 408 pcs.		
390481	*	SUSPENSION SYSTEM SUPPORT SHIM 0.25 mm	12	EA	12	79122			R2.52.L4 - 621 pcs.		
390321	A	2-Pc. Clamp Op. Collar	4	Ea.	4	76912		↓	IB4 Bin - 92 pcs.		
ME-390042	C	SLIDING SUPPORT ASSEMBLY									
390043	B	SUSPENSION SYSTEM SUPPORT RING ASSEMBLY	2	EA	2	76906		11/24/03	NT02407 - 11 pcs.		
390047	~~A~~ B	SUSPENSION SYSTEM SUPPORT PIN	4	EA	4	76914		↓	R8.52.L4 - 106 pcs.		
~~390050~~	~~A~~	~~Q2P1 SUSPENSION SYSTEM SLIDE BEARING~~	~~4~~	~~EA~~					~~Op. 390093 - 884~~		
390275	A	SUSPENSION SYSTEM SUPPORT PIN SHIM - 1mm	16	EA	16	76911		11/24/03	IB4 Bin - 168 pcs.		
390276	*	SUSPENSION SYSTEM SUPPORT PIN SHIM - 0.5mm	16	EA	16	76910		↓	- 168 pcs.		
390277	*	SUSPENSION SYSTEM SUPPORT PIN BOLTS	16	EA	16	76913			- 415 pcs.		
390480	*	SUSPENSION SYSTEM SUPPORT PIN SHIM 0.13 mm	16	EA	16	79121			R2.52.L4 - 408 pcs.		
390481	*	SUSPENSION SYSTEM SUPPORT SHIM 0.25 mm	24	EA	24	79122		↓	- 621 pcs.		

RETURN THIS COMPLETED PARTS KIT REQUEST WITH THE ISSUED PARTS TO THE PARTS COORDINATOR.

[signature]: STOCKROOM SIGNATURE AND DATE

TRAVELER NO. TR-333755

KIT IS COMPLETE (PARTS COORDINATOR SIGNATURE): John J. Szostak BADGE # 02943C

DATE 12/8/03

TD/ENGINEERING & FABRICATION

PARTS KIT REQUEST

ORIGINAL

IMPORTANT NOTES:
1) MAGNET NUMBER MUST BE FILLED IN.
2) ONLY ONE FORM PER MAGNET.
3) PARTS COORDINATOR OR DESIGNEE MUST SIGN THIS FORM.
4) MATERIAL CONTROL WILL ISSUE PARTS AND RECORD ROUTING NUMBER.
5) ANY QUANTITIES NOT AVAILABLE WILL HAVE COMMENTS RETURNED TO THE PARTS COORDINATOR FOR REVIEW.

MAGNET NUMBER: LQXA 01

RELEASED BY

PRODUCTION SIGNATURE: J. Szostak x2003

TODAYS DATE: 24-Nov-03

NEED DATE: 8-Dec-03

DELIVER TO _____ ICB

BUDGET CODE: ~~KCI~~ LCD

PROJECT NUMBER: 300
TASK NUMBER: 1.1.1.3 ~~X~~ 4

ISSUE VERIFICATION

MATERIAL CONTROL SIGNATURE: [signature]

DATE ISSUED TO STOCKROOM: 11/24/03

THIS KIT LIST IS FOR

ME-390525	D	Q1 SUSPENSION SYSTEM INSTALLATION

PART NUMBER	REV	DESCRIPTION	REQUIRED QTY/ASS'Y		MATERIAL CONTROL: QTY FILLED OUT BY STOCK ROOM: ISSUED	ROUTE FORM	NOT AVAIL	FILLED OUT BY EXPEDITER: DATE AVAIL	COMMENTS TO PRODUCTION MANAGER	PROD VERIFY PART	SUPT. VERIFY PART
390041	D	FIXED SUPPORT ASSEMBLY	~~4~~	~~EA~~					See separate list		
390042	C	SLIDING SUPPORT ASSEMBLY	~~4~~	~~EA~~							
390118	*	TIE BAR SHIM, 6.4 mm	4	EA	4	77204		11/24/03	JBY Bin - 53 pcs.		
390119	*	TIE BAR SHIM, 2.4 mm	4	EA	4	77203			- 52 pcs.		
390120	*	TIE BAR SHIM, 0.8 mm	4	EA	4	77202			- 52 pcs.		
390279	*	SUSPENSION MTG BRACKET	4	EA	4	77180			RG, S1, L1 - 72 pcs.		
390400	*	Q1 / Q3 TIE BAR ASSEMBLY	2	EA	2	77976			P/N - 310 pcs.		
390534	A	SHIELDING BLOCK	2	EA	2	79708			Q3, S, 3 - 18 pcs.		
393020	*	M8 x 50.0 mm LG SHCS 18-8 STN STEEL	12	EA	12	77847			JBY Bin - 128 pcs.		
393023	*	M8 HEX NUT, 18-8 STN STEEL	12	EA	12	77848			- 318 pcs.		
393025	*	M8 FLAT WASHER, 18-8 STN STEEL	12	EA	12	76745			- 1080 pcs.		
393027	*	M8 LOCK WASHER, 18-8 STN STEEL	12	EA	12	78194			- 1103 pcs.		
ME-390524	*	COLD MASS INSULATION ASSEMBLY									
390521	*	Q1/Q3 COLD MASS END BLANKET	1	EA	1	79874		11/24/03	Site 38 - 15 pcs.		
390522	*	Q1/Q3 COLD MASS MID BLANKET	1	EA	1	79875			- 10 pcs.		
390523	*	Q1 INSULATION, COLD MASS IP END BLANKET	1	EA	1	79876			- 7 pcs.		
390526	B	Q1 COLD MASS WELDED ASSEMBLY	ICB	HAS							

RETURN THIS COMPLETED PARTS KIT REQUEST WITH THE ISSUED PARTS TO THE PARTS COORDINATOR.

[signature] 12/8/03 : STOCKROOM SIGNATURE AND DATE

TRAVELER NO. TR-333755

KIT IS COMPLETE (PARTS COORDINATOR SIGNATURE): [signature] BADGE # 02943C

DATE 12/8/03

Revision Request Control Number: 1648

Specification Number: 5520 - TR - 333754 Current Revision: B

Traveler or Document Title LHC Q1 LMQXA Cold Mass Module Assembly Traveler

Step #/Description of Revision:

10.18 Modified Step. Changed "East" to "IP" and "West" to "Non-IP". Deleted "Center –North" and "Center South" per LQXA01.

John Szostak	Jim Rife	7/1/2004
Originator	Responsible Authority	Date

Revision Incorporated into the Traveler:

Revision Incorporated By	Date

Process Engineering Final Review:

Process Engineering/Designee	Date

Instructions for the completion of the Revision Request Form

Note(s):

Multiple steps may be effected by one Revision Request Form but only one specific Traveler or Document may be effected by each Revision Request Form.

If completing this form by hand, a Revision Request Control Number must be obtained before processing.

If completing this form entirely by electronic means, the printed copy to be filed in the Process Engineering Office is to be initialed by the individual incorporating the Revision Request and the individual who reviewed the Traveler or Document.

Originator Instructions:

1) Specification Number: - Enter the Specification Number of the Traveler or Document to be revised. (Document title is inserted automatically from the spec. #)

2) Current Revision: - Enter the Revision of the Traveler or Document to be revised.

3) Step# / Description of the Revision: - Enter a description of the revision to be made and the step# it applies to, if applicable. If needed to describe the revision attach a copy of the page(s). If the revision is coming from a related document such as a Discrepancy Report or an Engineering Order attach a copy of that document to the Revision Request Form.

4) Originator: - Originator is the person generating the form. (Select Name from List)

5) Responsible Authority: - Responsible Authority is person responsible for the process in question. (Select Name from List)

Process Engineering Office Instructions:

1) Revision Incorporated into the Traveler: - Signature of the individual who incorporated the revision.

2) Process Engineering Final Review: - Review the Traveler or Document revised, sign and date the form. The original completed Revision Request Form will be retained by the Process Engineering Office in the Revision Request Binder.

Revision Request Control Number: 1617

Specification Number: 5520 - TR - 333755 Current Revision: NONE

Traveler or Document Title LHC Q1 LQXA Cryostat Final Assembly Traveler

Step #/Description of Revision:

1.4 Removed Step. "All personnel performing steps in this traveler must have documented training for this traveler and associated operating procedures."
3.6 Added Step. "Weld the Helium Guard Mounting Plate (MD-390724) to the Vacuum Vessel (ME-390122) as per Q1 Vacuum Vessel Assembly(ME-390122)." per LQXA01 and Tom Page.
4.0 Removed Step. "Suspension System Assembly" Moved to Q1 Module Assembly Traveler per Jim Rife and Tom Page. (Subsequent added steps reflect New Step Numbers)
4.0 Modified Steps. Modified "Piping Assembly" steps from step 4.11 to 4.53 per Tom Page.
5.7 Modified Step. Changed to "Remove Pipe Supports (MD-390092), Pipe Anchor (MC-390486) and blankets. Wrap blankets in plastic bag to keep clean for later use. Label blankets as they are removed for later positioning." (New Step 4.7)
5.8 Modified Step. Changed to "Install Pipe Supports (MD-390092) and Pipe Anchor (MC-390486) to same locations as in step 4.4 and 4.5 respectively." (New Step 4.8)
5.11 Added Step. "Leak Check the Q1 Thermal Shield Cooling Pipe Crossover (MD-390466) to the Q1 Thermal Shield Cooling Tube Weldment (MD-390431) per ES-107240 and record results in table below." per LQXA01.
6.8 Added Step. "Install Conflat Flanges (MA-390374) w/ Copper Gaskets (MA-390375) and Bolt Set (MA-390376) to Cryostat as per Q1 Cryostat General Assembly (ME-390127)." per LQXA01.
6.9 Added Step. "Install Target Holders (MD-390539), (MD-390540) and (MD-390211) as per Q1 Cryostat General Assembly (ME-390127)." per LQXA01.
6.10 Added Step. "Install Reference Socket Cup (MA-390426) as per Q1 Cryostat General Assembly (ME-390127)." per LQXA01.
6.11 Modified Step. Deleted "...Cutouts will have to be made for the Upper Support Lugs." per LQXA01. (Already cut.) (New Step 5.12)
6.11 Added Step. "Install Q1 Thermal Shield Cooling Pipe Crossover(MD-390466) to Q1 Thermal Shield Cooling Tube Weldment (MD-390431)."
6.12 Added Step. "Weld the Cooling Pipe Crossover Connectors (MA-390467) to the Cooling Tube Weldment (MD-390431) and the ooling Pipe Crossover (MD-390466) as per Q1 Thermal Shield Assembly (ME-390429)." per LQXA01.
8.0 Added Step. Final Preparations

John Szostak	Jim Rife	3/10/2004
Originator	Responsible Authority	Date
Revision Incorporated into the Traveler:		
	Revision Incorporated By	Date
Process Engineering Final Review:		
	Process Engineering/Designee	Date

Instructions for the completion of the Revision Request Form

Note(s):

Multiple steps may be effected by one Revision Request Form but only one specific Traveler or Document may be effected by each Revision Request Form.

If completing this form by hand, a Revision Request Control Number must be obtained before processing.

If completing this form entirely by electronic means, the printed copy to be filed in the Process Engineering Office is to be initialed by the individual incorporating the Revision Request and the individual who reviewed the Traveler or Document.

Originator Instructions:

1) Specification Number: - Enter the Specification Number of the Traveler or Document to be revised. (Document title is inserted automatically from the spec. #)

2) Current Revision: - Enter the Revision of the Traveler or Document to be revised.

3) Step# / Description of the Revision: - Enter a description of the revision to be made and the step# it applies to, if applicable. If needed to describe the revision attach a copy of the page(s). If the revision is coming from a related document such as a Discrepancy Report or an Engineering Order attach a copy of that document to the Revision Request Form.

4) Originator: - Originator is the person generating the form. (Select Name from List)

5) Responsible Authority: - Responsible Authority is person responsible for the process in question. (Select Name from List)

Process Engineering Office Instructions:

1) Revision Incorporated into the Traveler: - Signature of the individual who incorporated the revision.

2) Process Engineering Final Review: - Review the Traveler or Document revised, sign and date the form. The original completed Revision Request Form will be retained by the Process Engineering Office in the Revision Request Binder.

Traveler Title:	Specification No:	Revision:	DR No:
LHC Q1 LQXA Cryostat Final Assembly Traveler	333755	None	3928

Step No:	Drawing No:	Routing Form No:	Serial No:	Rework ID:
5.16	390174		LQXA01	0

Discrepancy Description:

The Weld Adaptor (390278) and the End Dome Elbow (390184) do not fit up properly to weld them according to the print.

Originator: Steve Gould

Date: 2/17/2004

Cause of Nonconformance:

Elbow in dome slightly rotated.

Responsible Authority: Thomas Page

Date: 2/20/2004

Disposition:

The adapter was welded in place.

Responsible Authority: Thomas Page

Date: 2/20/2004

Corrective Action to Prevent Recurrence:

Align the end dome elbow more precisely. (TRR No.1617)

Responsible Authority: Thomas Page

Date: 2/20/2004

Corrective Action/Disposition Verified By: John Szostak

Date: 7/2/2004

Will Configuration be affected?: ☐ YES ☑ NO

Identified problem area:

☐ Material ☐ Manpower ☑ Method ☐ Machine ☐ Measurement

Reviewed By: Bob Jensen

Date: 7/7/2004