Document ID:

1977

LHC Q1 LQXA Cryostat Final Assembly Traveler

333755 / Rev. None

Job No:	**248**
E + F Project/Task No.:	**300/1.1.1.6.3**
M + S Project/Task No.:	**300/1.1.1.6.2**

Place This Side Down For Scanning!!!

Magnet Travelers

LQXA02-0

Document ID:

1977

Job No.:

248

Project/Task No.

300/1.1.1.6.3

Series:

LQXA

Serial No:

LQXA02

Rework ID:

0

Specification No.:

333755

Revision:

None

LQXA02-0

Fermi National Accelerator Laboratory
Batavia, IL 60510

LARGE HADRON COLLIDER
Q1-LQXA/
CRYOSTAT FINAL ASSEMBLY TRAVELER

Reference Drawing(s):
Vacuum Vessel and Cryostat Assembly (ME-390127)
Q1 Cryostat Internal Piping (ME-390174)

Project/Task Number: *300/1.1.1.6.2*

Released By: *John Szostak* | **Magnet/Device Series:** *LQXA*

Date Issued: *4/14/2004 8:16:42 AM* | **Scanned Pages:** 52

Prepared by: J. Szostak

Title	Signature	Date
TD / E&F Process Engineering	*Bob Jensen* Bob Jensen / Designee	*2/10/04*
TD / LHC Production Supervisor	*Jim Rife* Jim Rife / Designee	*2/10/04*
TD / LHC Production Engineer	*Rodger Bossert* Rodger Bossert / Designee	*2/10/04*
TD / LHC Production Engineer Cryostat	*Tom Page* Tom Page / Designee	*2/10/04*
TD / LHC Project Engineer Cryostat	*Tom Nicol* Tom Nicol / Designee	*2/10/04*
TD / LHC Program Manager	*Jim Kerby* Jim Kerby / Designee	*2/10/04*

Revision Page

Revision	Step No.	Revision Description	TRR No.	Date
None	N/A	Initial Release	N/A	2/10/04

Ensure appropriate memos and specific instructions are placed with the traveler before issuing the sub traveler binder to production.

1.0 General Notes

1.1 All steps that require a sign-off shall include the Technician/Inspectors first initial and full last name.

1.2 No erasures or white out will be permitted to any documentation. All incorrectly entered data shall be corrected by placing a single line through the error, initial and date the error before adding the correct data.

1.3 All Discrepancy Reports issued shall be recorded in the left margin next to the applicable step.

TRR# 1617

1.4 All personnel performing steps in this traveler must have documented training for this traveler and associated operating procedures.

1.5 Personnel shall perform all tasks in accordance with current applicable ES&H guidelines and those specified within the step.

1.6 Cover the product/assembly with Green Herculite (Fermi stock 1740-0100) when not being serviced or assembled.

2.0 Parts Kit List

2.1 Attach the completed Parts Kit for this production operation to this traveler. Ensure that the serial number on the Parts Kit matches the serial number of this traveler. Verify that the Parts Kit received is complete.

J. Grostah
Process Engineering/Designee

4/14/04
Date

3.0 Vacuum Vessel Preparation and Painting

3.1 Record the Vacuum Vessel Serial Number.

#6

Technician(s) Date 4/16/04

3.2 Inspect the transition area between the Support Sections and Tube Sections. Grind smooth if necessary.

Technician(s) Date 4/16/04

3.3 Clean the Vacuum Vessel (ME-390122) using a vacuum cleaner or equivalent.

Technician(s) Date 4-16-04

TRR# 1705 N/A

3.4 Leak Check the Vacuum Vessel Assembly (ME-390122) per ES-107240 and record results in table below.

PART NO. Q1-6 ME 390122		SCALE UNITS BEFORE HELIUM PROBE	SCALE UNITS WHILE ENCLOSURE FLOODING	VACUUM VESSEL DETERMINATION OF MINIMUM DETECTABLE LEAK				
DATE TIME	OPERATOR'S LAST NAME			MDS - ((Response - Bckgnd) - Leak Value) = MDL				
2/2/04	[illegible]	32	32	2	4/60	32	E-8 4.75	E-10 2.21
							___ x E-8	___ x E-___

Inspector N/A Date

3.5 Prepare the outside of the Vacuum Vessel (ME-390122) for painting. Clean using Ethyl Alcohol (Fermi stock 1920-0550) and Kimwipes (Fermi stock 1660-2500) or equivalent.

Technician(s) _____ Date 4-16-04

3.6 Mask the Stainless Steel Components of the Vacuum Vessel for painting.

Technician(s) _____ Date 4-16-04

3.7 Prime the Vacuum Vessel using Rust-o-leum (Fermi stock 1825-4000).

Technician(s) _____ Date 4-16-04

3.8 Verify that the Screws (MA-393036) will thread easily into the appropriate holes in the Vacuum Vessel (ME-390122). If necessary, tap out holes with M10 – 1.5 Tap. Move Vacuum Vessel (ME-390122) to Table.

Lead Person _____ Date 4/16/04

3.9 Paint the Vacuum Vessel using Flambeau Red (Fermi stock 1825-3710).

Technician(s) _____ Date 4/16/04

TRR# 1617

4.0 Suspension System

4.1 Clean the Suspension System with Ethyl Alcohol (Fermi stock 1920-0550) and Kimwipes (Fermi stock 1660-2500) or equivalent.

Part Name	Part Number	Quantity	Completed
Fixed Support Assembly	**(ME-390041)**	**1**	✓
Sliding Support Assembly	**(ME-390042)**	**1**	✓
Tie Bar Assembly	**(ME-390400)**	**2**	✓
Tie Bar Shim, 6.4mm (.250")	**(ME-390118)**	**4**	✓
Tie Bar Shim, 2.4mm (.093")	**(ME-390119)**	**4**	✓
Tie Bar Shim, 0.8mm (.031")	**(ME-390120)**	**4**	✓
Suspension System Adjusting Screw	**(MB-390039)**	**8**	✓
M16 x 70mm SHCS	**(MA-393021)**	**8**	✓
Washer (.656" ID x 1.38" OD x .13" THK STN STEEL)	**(MA-390377)**	**8**	✓

Label the IP End and the Non-IP End of the Vacuum Vessel with a temporary sticker or equivalent.

Technician(s) _____ Date 4/16/04

4.2 Insert the Fixed Support Assembly (ME-390041) into the Vacuum Vessel and position at the Non-IP End.

Technician(s) _____ Date 4/16/04

4.3 Install the Suspension System Adjusting Screws (MB-390039) and Washer (MA-390377) into the Vacuum Vessel to hold the Fixed Support Assembly in place. Coat all screw threads with Molybdenum Disulfide prior to installation.

[redacted]

Technician(s) _____ Date 4/16/04

4.4 Adjust the Vertical and rotational alignment of the Supports using the Suspension System Adjusting Screws (MB-390039). Ensure all four screws are in contact with the Support and that Diametrically Opposing Support Lugs are equidistant from the Vacuum Vessel Wall.

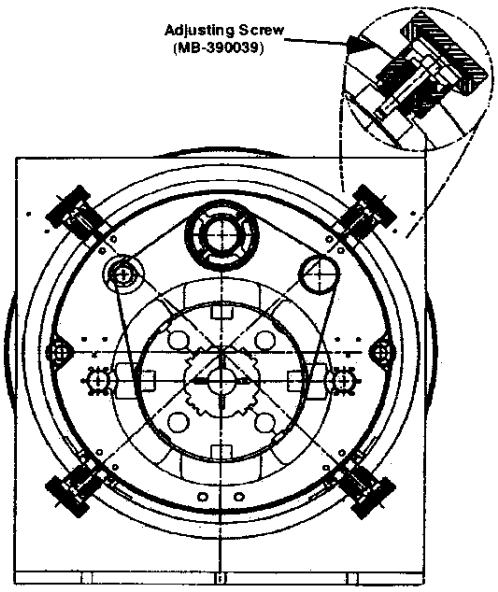

Technician(s) _____ Date 4/16/04

4.5 Insert the Sliding Support Assembly (ME-390042) in to the Vacuum Vessel and position at the IP End.

Technician(s) _____ Date 4/16/04

4.6 Install the Suspension System Adjusting Screws (MB-390039) and Washer (MA-390377) into the Vacuum Vessel to hold the Fixed Support Assembly in place. Coat all screw threads with Molybdenum disulfide prior to installation.

[redacted]

Technician(s) _____ Date 4/16/04

4.7 Adjust the Vertical and rotational alignment of the Supports using the Suspension System Adjusting Screws (MB-390039). Ensure all four screws are in contact with the Support and that Diametrically Opposing Support Lugs are equidistant from the Vacuum Vessel Wall.

2.017

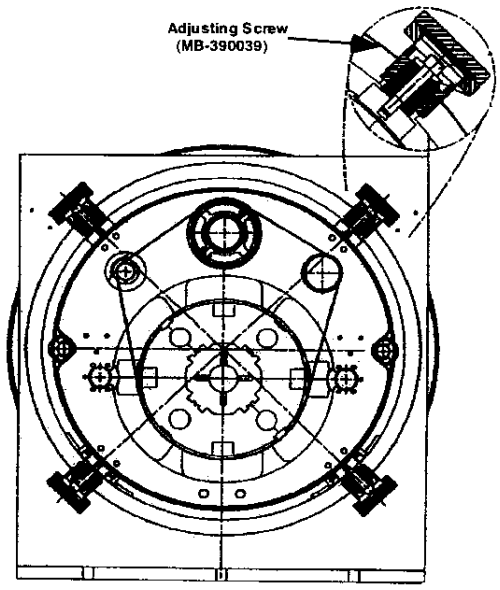

Technician(s) _____ Date 4/16/04

4.8 Assemble the Suspension System using the Fixed Support Assembly (ME-390041), the Sliding Support Assemblies (ME-390042) and the Tie Bar Assemblies (MC-390167). Insert Tie Bar Shims (MC-390118),(MB-390119) and (MB-390120) between the Sliding Support Assemblies (ME-390042) and the Tie Bar Assemblies (MC-390400) as required. (Reference drawing: ME-390525).

Technician(s) _____ Date 4/16/04

4.9 Measure the distance between the Suspension Rings at the bottom of the Threaded Rods. Install ~~Threaded Rods after measurements.~~

Non-IP North to IP North 164 13/16"

Non-IP South to IP South 164 13/16"

Technician(s) _____ Date 4/16/04

4.10 Label the IP End Support and the Non-IP End Support. (Writing on the G-11 Support is acceptable).

Installed Before it could be labeled.

N/A

Technician(s) _____ Date _____

4.11 Loosen each Suspension System Adjusting Screw (MB-390039) 1/2 turn and remove the Suspension System from the Vacuum Vessel.

Technician(s) _____ Date 4/16/04

4.12 Configure the Suspension Tooling for Q1 Assembly per Cryostat Layout Tooling & Assembly (ME-364604). Place Suspension Assembly on the tooling and make necessary adjustments to the tooling.

Technician(s) _____ Date 4/16/04

4.13 Assemble the Suspension Mounting Brackets (MD-390279) to the Support Assemblies.

Technician(s) _____ Date 4/17/04

4.14 Slide the Suspension System over the Cold Mass and place on tooling. The Suspension system may be disassembled during this step. Record shim sizes and locations prior to disassembly.

Note(s):

Ensure that the Suspension System is configured properly to the Cold Mass with respect to the IP and Non-IP Ends.

Technician(s) _____ Date 4/17/04

X 4.15 Verify locking collars exist only at Non-IP End support.

Lead Person _____ Date 4-19-04

4.16 Establish alignment between the Cold Mass and the Support system. Install shims between the Brass Slide Bars and the Stainless Steel Blocks on each support as needed.

Record Shim size and location below.

East-North _____ **East-South** _____

Center-North _____ **Center-South** _____

West-North _____ **West-South** _____

Technician(s) N/A Date _____

X 4.17 Verify the Alignment of the Cold Mass and the Support System.

Crew Chief _____ Date 4-19-04

4.18 Weld the Cold Mass to the Outboard Cold Mass Brackets as per (ME-390525).

Weldor(s) N/A Date _____

After Mod MSS Complete

TRR# 1617

5.0 Piping Assembly

Note(s):

Do not use a Strap Wrench on the Pipes.

5.1 Place the Cold Mass assembly on the insertion rail system.

Technician(s) _____ Date 4/23/04

5.2 Clean the Pipe Supports with Ethyl Alcohol (Fermi stock 1920-0550) and Kimwipes (Fermi stock 1660-2500) or equivalent.

Technician(s) _____ Date 4/23/04

5.3 Install Cold Mass Insulation per Cold Mass Insulation Installation (ME-390524).

Technician(s) _____ Date 4-30-04

5.4 Install the Pipe Supports (MD-390092)(Qty. 3) on the Cold Mass per Q1 Cryostat Assembly Internal Piping (ME-390174).

Note(s):

A Tie Bar may be disconnected, if necessary, from the Fixed Support Assembly to install the central two pipe supports.

PIPE SUPPORT ASSEMBLY

Technician(s) _____ Date 4.30-04

5.5 Install Pipe Anchor (MC-390486) on the Cold Mass per Q1 Cryostat Assembly - Internal Piping (ME-390174).

Technician(s) _____ Date 4-30-04

5.6 Using Pipe Supports (MD-390092) as a template, cut the blankets around the Pipe Support Feet and slit blankets circumferentially at the Pipe Supports.

Technician(s) _____ Date 4-30-04

IN # 1617 → 5.7 Remove Pipe Supports (MD-390092) & pipe Anchor (MC 390486) and blankets. Wrap blankets in plastic bag to keep clean for later use. Label blankets as they are removed for later positioning.

Technician(s) _____ Date 4-30-04

5.8 Install Pipe Supports (MD-390092) to same location as in step 5.4.

Technician(s) _____ Date 4/30/04

5.9 Install Q1 Installation Tie Rod Assembly (MC-390638) and Tie Bar Retaining Clamp (MB-390136) as per Q1 Cryostat Assembly - Internal Piping (ME-390174).

Technician(s) _____ Date 5-1-04

5.10 Clean the Heat Exchanger Outer Shell Pipe (MD-390145), Pumping Line Pipe (MB-390147) and the Cool Down Pipe (MB-390146) with Ethyl Alcohol (Fermi stock 1920-0550) and Kimwipes (Fermi stock 1660-2500) or equivalent.

Technician(s) _____ Date 5-1-04

5.11 Slide the Heat Exchanger Outer Shell Pipe (ME-390176), Pumping Line Pipe (MB-390182) and the Cool Down Pipe (MB-390193) through all five supports.

Note(s):

Ensure the cross over hole in the Heat Exchanger Pipe is lined up with the elbow on the End Dome.

Technician(s) _____ Date 5/1/04

5.12 Clean the Pumping Line End Flange (MB-390032), the Cool Down Line End Flange (MB-390033) and the Heat Exchanger Outer Shell Flange (MB-390031) with Ethyl Alcohol (Fermi stock 1920-0550) and Kimwipes (Fermi stock 1660-2500) or equivalent.

Technician(s) _____ Date 5/1/04

5.13 Weld the Heat Exchanger Outer Shell Flange (MB-390031), the Pumping Line End Flange (MB-390032) and the Cool Down Line End Flange (MB-390033) to the ends of the corresponding pipes.

x William E Gatfield — Weldor(s) — 5-1-04 Date

5.14 Clean the Cold Mass and the Retainer Clips (MA-390103) with Ethyl Alcohol (Fermi stock 1920-0550) and Kimwipes (Fermi stock 1660-2500) or equivalent.

Technician(s) — 5/1/04 Date

5.15 Weld the Retainer Clips (MA-390103) to the Cold Mass Outer Shell as per the Q2 Pipe Support Assembly (ME-390087) or Q1 Internal Piping Assembly (ME-390174).

x William E Gatfield — Weldor(s) — 5-1-04 Date

5.16 Position the End Dome Elbow, the Weld Adapter (MC-390278) and the Heat Exchanger Outer Shell.

Technician(s) — 5/1/04 Date

5.17 Weld the Outer Shell to the Weld Adapter (MC-390278).

x Robert A. [illegible] — Weldor — 5/1/04 Date

5.18 Weld the End Dome Elbow to the Weld Adapter (MC-390278).

Robert A. [illegible] — Weldor — 5/1/04 Date

5.19 Assemble the Corrugated Tube Assembly (ME-390179).

Technician(s) — 5/1/04 Date

5.20 Insert the Corrugated Tube Assembly (ME-390179).

Technician(s) — 5/1/04 Date

5.21 Position the Heat Exchanger End Plate (MD-390178).

Technician(s) — 5/1/04 Date

5.22 Weld the Heat Exchanger End Plate (MD-390178) to the Outer Shell Pipe (MD-390177).

Robert A. [illegible] — Weldor — 5/1/04 Date

5.23 Weld the Corrugated Tube Assembly (ME-390179) to the Heat Exchanger End Plate (MD-390178).

Weldor — Date: 5/1/04

5.24 Position the Q1 Pumping Line Pipe (MB-390183).

Technician(s) — Date: 5/1/04

5.25 Weld the Q1 Pumping Line Pipe (MB-390183) to the Heat Exchanger Corrugated Tube (ME-390179).

Weldor — Date: 5/1/04

5.26 Position the Cooldown Line (MC-390193).

Technician(s) — Date: 5/1/04

5.27 Weld the Cooldown Line (MC-390193).

Weldor — Date: 5/12/04

5.28 Weld the Q1 Cooldown Line (MC-390193), Q1 Pumping Line (ME-390182) and Heat Exchanger Outer Shell (ME-390175) to the Pipe Anchor (MC-390486).

Weldor(s) — Date: 5/12/04

5.29 Weld Pumping Line End Flange (MA-390032) to the Pumping Line Pipe (MD-390183).

Weldor(s) — Date: 5-1-04

5.30 Weld Cool Down Line End Flange (MA-390033) to the Cooling Line Pipe (MD-390146).

Weldor(s) — Date: 5-1-04

5.31 Insert 4.5k Intercept Line Pipes (MB-390192) per (ME-390208).

Technician(s) — Date: 5/13/04

5.32 Weld the Pipe Anchor (MC-390486) to the Cold Mass Skin.

Weldor — Date: 5/12/04

5.33 Weld the fixed collar to the 4.5k Intercept Line (MB-390192) per (ME-390208).

Weldor(s) 5/13/04 Date

363 psi CHANGE AS PER T. PAGE

TRR# 1617

5.34 Pressure test the Cold Mass Assembly at 375 psi Nitrogen per Section 5034 of the Fermilab ES&H Manual and UG-100 of the Code.

DR# HGQ-0461 (3973) DR#3974

Warning:

The test is to be performed after normal working hours and only personnel directly involved with the test will be present.

Inspector 5/14/04 Date

5.35 Leak Check the Cold Mass Assembly. (This will include the Outer Shell Pipe (MD-390177)).

Part No.	DETERMINATION OF DETECTABLE LEAK						
	M.D.S. ÷ ((Response – Background) ÷ Leak value) = MDL						
OPERATOR'S LAST NAME	SCALE UNITS BEFORE HELIUM PROBE	SCALE UNITS WHILE ENCLOSURE FLOODING	MDS	Response	Background	Leak Value	MDL
GDW	40X1	40X1	2	30X5	40X1	3.85 x E-8	7.0 x E-10

Inspector 5-17-04 Date

5.36 Leak check 4.5k Intercept Lines (MB-390192).

Part No.	DETERMINATION OF DETECTABLE LEAK						
	M.D.S. ÷ ((Response – Background) ÷ Leak value) = MDL						
OPERATOR'S LAST NAME	SCALE UNITS BEFORE HELIUM PROBE	SCALE UNITS WHILE ENCLOSURE FLOODING	MDS	Response	Background	Leak Value	MDL
GDW 123 000	22X1	22X1	2	38X5	22X1	3.85 x E-8	4.6 x E-10

Inspector 5-18-04 Date

6.0 Shield Assembly

INSULATE THE SUPPORT BLOCKS FIRST & ① THE RADIATION GUARD BLOCKS ON IP END!
② SHIELDING BLOCK (390534)
The above is done in Module Assy 333754.
-JA

6.1 Lift the Cold Mass Assembly and place the IP End (ME-390433) and Non-IP End (ME-390434) on the Insertion Rails. Lower the Cold Mass back onto the rails ensuring the holes in the Shield Sections line up with Support Rollers.

Technician(s) _____ Date 5/19/04

6.2 Insert the Mid Section (ME-390435) and the Support Bands (MD-390083).

Technician(s) _____ Date 5/19/04

6.3 Assemble the bottom half of the shield. Leave all bolts loose. Spray all screw threads with Molybdenum.

Technician(s) _____ Date 5/20/04

6.4 Assemble the Cooling Tubes (MD-390431) to the Bottom Half of the Shield.

Technician(s) _____ Date 5/20/04

6.5 Lift the Cold Mass and place the Shield Inner and Outer MLI Blankets (ME-390487 & ME-390488) onto the Insertion Rails in the correct orientation.

Note(s):

Place the Outer Blanket (ME-390314) on the Rails first.

Technician(s) _____ Date 5/20/04

6.6 Lower the Cold Mass onto the rails. Ensure the slits in the blankets line up with Support Rollers.

Technician(s) _____ Date 5-20-04

6.7 Install the Cold Mass MLI Blankets per (ME-390524) and in the same position as Step 5.6.

Technician(s) _____ Date 5-20-04

6.8 Install the Cold Mass Insulation Mounting Lug Covers (MC-390496).

Technician(s) _____ Date 5-20-04

6.9 Cut and install the pipe MLI blankets per Q1 Piping Insulation (ME-390541).

Technician(s) _____ Date 5-20-04

6.10 Install the Upper Shield per Q1 Thermal Shield Assembly (ME-390429). Spray all screw threads with Molybdenum.

Technician(s) _____ Date 5-20-04

TRR# 1617 →

6.11 Install the Shield Blankets (ME-390487 & ME-390488). Cutouts will have to be made for the Upper Support Lugs.

Technician(s) _____ Date 5/20/04

6.13W FLAGS

PART NO. X OVERTUBE LQXA02		SCALE UNITS BEFORE HELIUM PROBE	SCALE UNITS WHILE ENCLOSURE FLOODING	DETERMINATION OF MINIMUM DETECTABLE LEAK				
DATE TIME	OPERATOR'S LAST NAME			MDS ÷ ((Response - Bckgnd) ÷ Leak Value) = MDL				
8-31-04	GAW	4081	4081	2	4255	4081	3.85×10^{-8}	4×10^{-10}

6.13 & FLAGS TRR# 1763

7.0 Cold Mass Insertion into the Vacuum Vessel

7.1 Install ~~Green~~ PIG Putty between the Vacuum Vessel and the Insertion Rails.

Technician(s) _____ Date 5-20-04

7.2 Install the Cold Mass Pull-in Tooling.

Technician(s) _____ Date 5-20-04

7.3 Mount the Pneumatic Winch to floor on the West side of the Vacuum Vessel.

Technician(s) _____ Date 5/21/04

7.4 Connect the cable to the Pull-in Tooling.

Technician(s) _____ Date 5/21/04

7.5 Pull the Cold Mass Assembly into the Vacuum Vessel.

Technician(s) _____ Date 5/21/04

7.6 When the Cold Mass is fully inserted, install the Suspension System Adjusting Screws (MB-390039).

Technician(s) _____ Date 5-21-04

7.7 Adjust the Suspension System Adjusting Screw (MB-390039) as needed to center the Cold Mass in the Vacuum Vessel.

Technician(s) _____ Date 5/22/04

TRR # 1617

6.12 - WELD Q1 THERMAL SHIELD COOLING PIPE CROSSOVER

William E Gutfield _____ 5-24-04
WELDER DATE

6.13 LEAK CHECK Q1 THERMAL SHIELD COOLING PIPE CROSSOVER

PART NO.		SCALE UNITS BEFORE HELIUM PROBE	SCALE UNITS WHILE ENCLOSURE FLOODING	DETERMINATION OF MINIMUM DETECTABLE LEAK				
DATE / TIME	OPERATOR'S LAST NAME			MDS = ((Response - Bckgnd) ÷ Leak Value) = MDL				
	GAW	6X1	6X1	2	4.25		8X10^-10	2.0X10^-10
Q1 LQX								

LHC Serial No.: LQXA02-0
Notes:

INSP D. CAMJSZK DATE 5-24-04

8.0 Final Electrical Inspection

8.1 Perform an electrical inspection on each of the Individual Quadrants and the Cold Mass. Refer to the Valhalla and Leader Free Standing Coil Measurement Procedure (ES-292306).

TRR# 1617

To measure the Resistance of a Q1 Cold Mass:

1. Use Valhalla Scientific 4300B digital micro-ohmmeter.
2. Set Test Current to 1 amp. → .1A
3. Set Scale to 2V full scale.
4. Turn temperature compensation on.
5. Turn test current off.
6. Connect I_{HI} to Q4 inner power lead as shown in figure.
7. Connect I_{LO} to Q3 inner power lead as shown in figure.
8. Turn test current on.
9. Connect V_{HI} and V_{LO} to voltage taps as shown in resistance table.
10. To measure Total with leads, connect V_{HI} to Q4 power lead and V_{LO} to Q3 power lead.
11. Read resistance and record in traveler.

Q1 Cold Mass Electrical Measurements

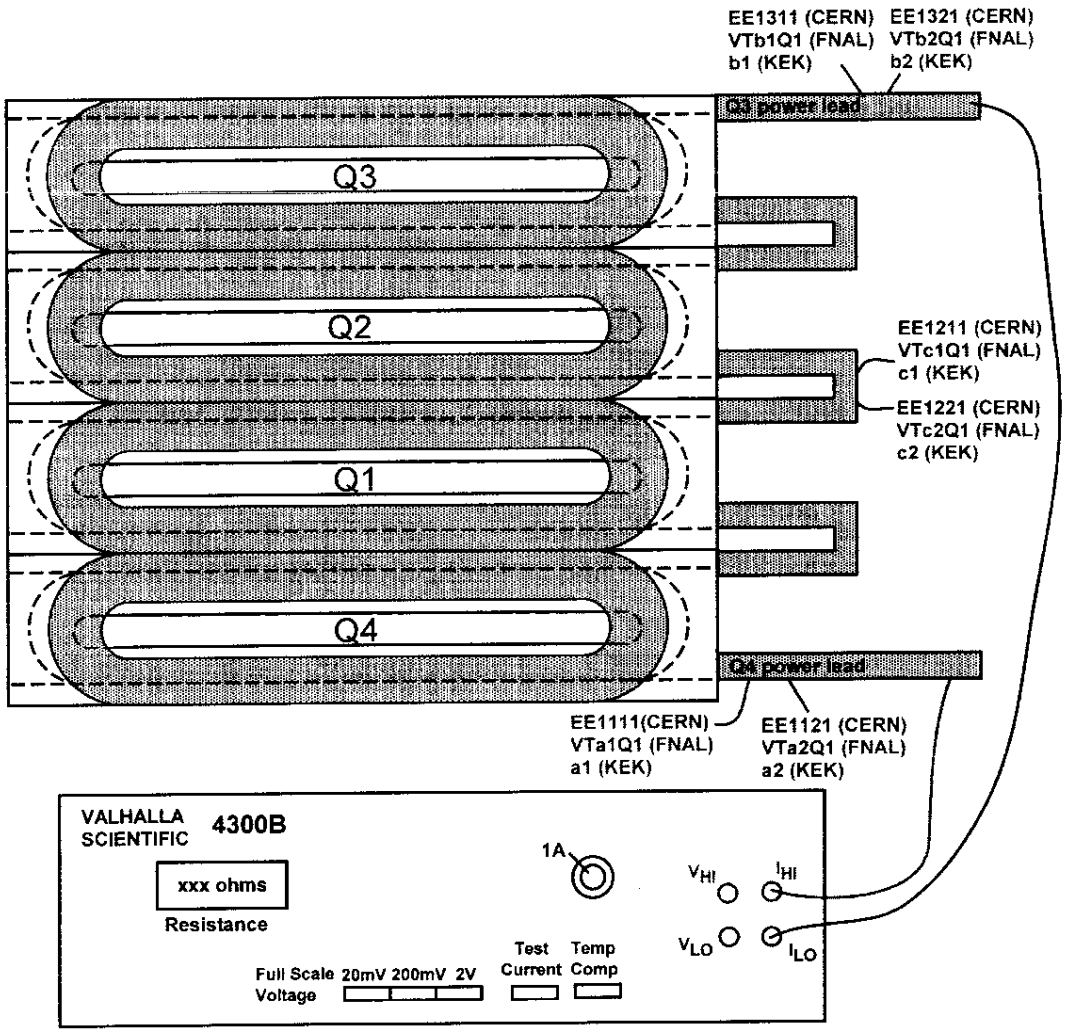

(Q1) Resistance				Nominal to Ω
Voltage Tap Serial Numbers				Total Resistance
Connect	Fermi	CERN	KEK	
V_{HI}	VTa1Q1	EE1111	a1	3428 mΩ
V_{LO}	VTc1Q1	EE1211	c1	
V_{HI}	VTc1Q1	EE1211	c1	3432 mΩ
V_{LO}	VTb1Q1	EE1311	b1	
V_{HI}	VTa1Q1	EE1111	a1	6860 mΩ
V_{LO}	VTb1Q1	EE1311	b1	
				Total Resistance with Leads
V_{HI}	Q4 Power Lead			6864 mΩ
V_{LO}	Q3 Power Lead			

Technician(s) _____ Date 10/25/04

Check resistance of Redundant Voltage Taps.

Q1 Redundant Voltage Taps				
Connect	Fermi	CERN	KEK	Resistance
V_{HI}	VTa2Q1	EE1121	a2	3429 mΩ
V_{LO}	VTc2Q1	EE1221	c2	
V_{HI}	VTc2Q1	EE1221	c2	3435 mΩ
V_{LO}	VTb2Q1	EE1321	b2	

Technician(s) _____ Date 10/25/04

To measure Ls and Q of a Q1 Cold Mass:

1. Use Hewlett Packard HP4284A digital LCR meter.
2. Turn line switch to on. The words "Measurement Display" should now be highlighted in the upper left corner of the display screen.
3. Use cursor buttons (shown in figure with arrows) to toggle down until "function" is highlighted near the upper left corner of the display screen.
4. Push the lowest of the five buttons to the right of display 3 times. (this button is shaded gray in the figure) The line in the display screen next to the second button down should now read "Ls-Q" and "function" near the upper left corner of the display should have the option "Ls-Q" chosen.
5. Scroll to "integer" using the cursor buttons. "Integer" will have the option "medium" chosen.
6. Press the 3rd button of five. The word "medium" should change to "long".
7. Connect H_{cur} to Q4 power lead as shown in figure.
8. Connect L_{cur} to Q3 power lead as shown in figure.
9. Connect H_{pot} and L_{pot} to voltage taps as shown in table.
10. Read Ls and Q from display and record in traveler.

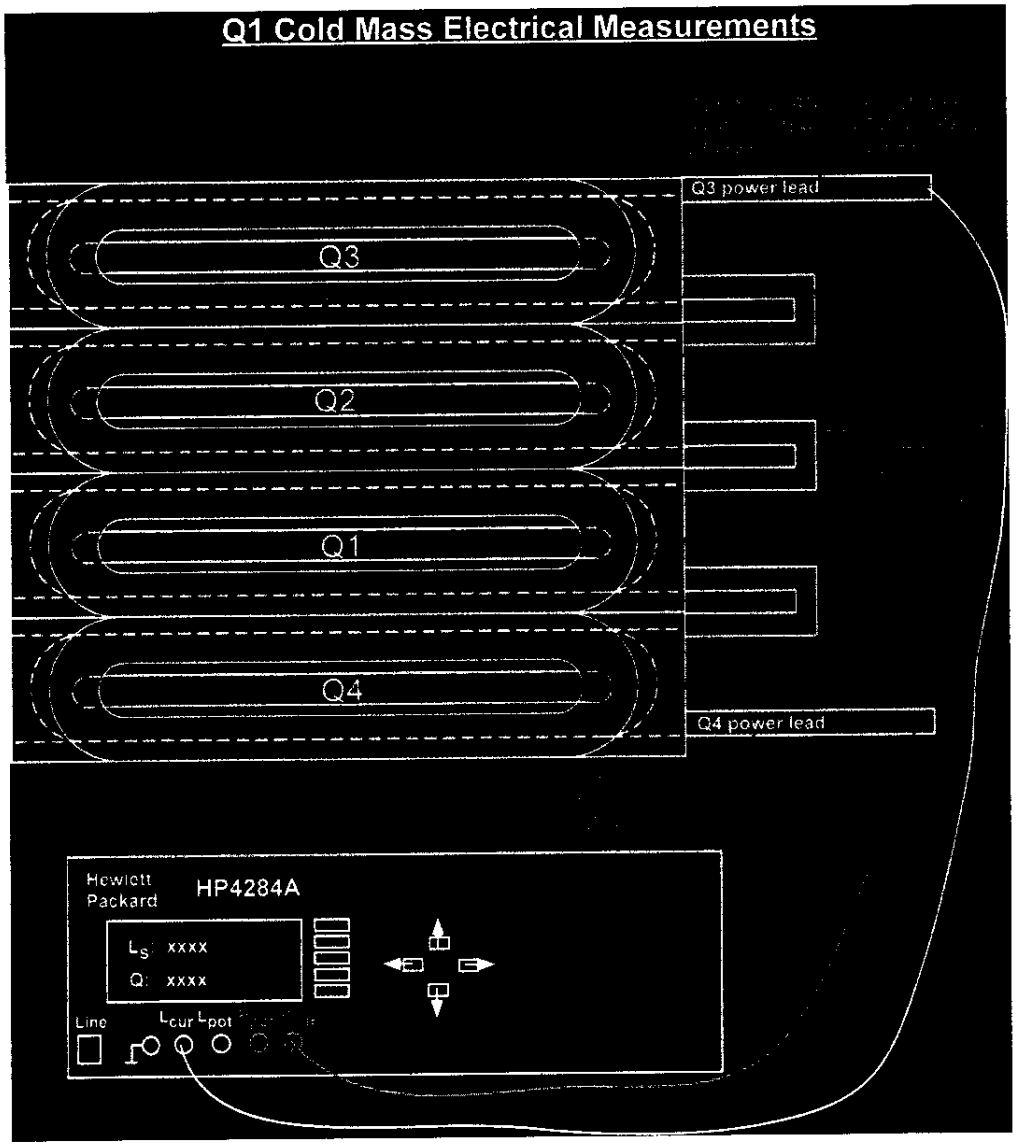

(Q1) Inductance				Nominal ~ to mH
Voltage Tap Serial Numbers				Total Inductance
Connect	Fermi	CERN	KEK	
H_{POT}	VTa1Q1	EE1111	a1	15.584 mH
L_{POT}	VTc1Q1	EE1211	c1	
H_{POT}	VTc1Q1	EE1211	c1	15.594 mH
L_{POT}	VTb1Q1	EE1311	b1	

H_{POT}	VTa1Q1	EE1111	a1	31.174 H
L_{POT}	VTb1Q1	EE1311	b1	

(Q1) Q-Factor				Nominal ~ to
Voltage Tap Serial Numbers				Total Q
Connect	Fermi	CERN	KEK	
H_{POT}	VTa1Q1	EE1111	a1	1.1
L_{POT}	VTc1Q1	EE1211	c1	
H_{POT}	VTc1Q1	EE1211	c1	1.1
L_{POT}	VTb1Q1	EE1311	b1	

H_{POT}	VTa1Q1	EE1111	a1	1.1
L_{POT}	VTb1Q1	EE1311	b1	

Technician(s) _____ Date 10/25/04

To measure the resistance of a Thermometer (RTD):

1. Use Hewlett Packard HP3457A digital multimeter.
2. Record temperature of building within +/- 5 degrees.
3. Press line button to turn line on.
4. Connect wires as shown in Figure below.
   U+ (Black) to Sense HI
   I+ (Yellow) to Input HI
   U- (Red) to Sense LO
   I- (Green) to Input LO
5. Push blue button (function key) once.
6. Push OHMF button.
7. Verify arrow in readout is above the 4WΩ (meaning a 4 wire resistance measurement).
8. Read resistance in ohms and record in traveler.

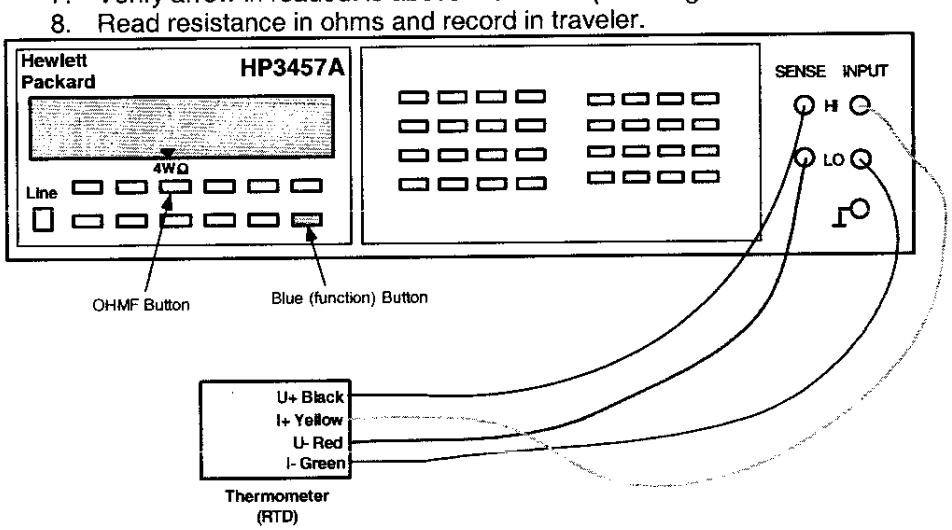

To measure the resistance of a Cryogenic (Warm-up) Heater

1. Use Hewlett Packard HP3457A digital multimeter.
2. Record temperature of building within +/- 5 degrees.
3. Press line button to turn line on.
4. Connect wires as shown in Figure below.
5. Push blue button (function key) once.
6. Push OHMF button.
7. Verify arrow in readout is above the 4WΩ (meaning a 4 wire resistance measurement).
   Note: Although this is technically a 4 wire measurement, it is effectively a 2 wire measurement, since there are only 2 wires connected to each heater.
8. Read resistance in ohms and record in traveler.

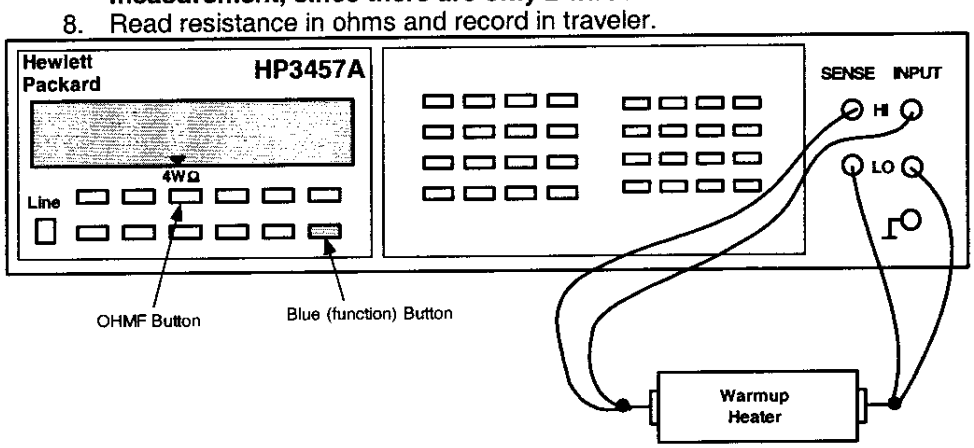

Q1 - RTD's and Cryogenic (warm-up) Heaters 72° F			
Component	**Fermi**	**CERN**	**Resistance**
Q1 RTD, primary	TaQ1	TT8311	65.493 Ω
Q1 RTD, redundant	TbQ1	TT8321	67.615 Ω
Q1 Cryogenic (warm-up) Heater (LE) - wire at top (CERN #1 I+)	W1aQ1	EH8311+	17.645 Ω
Q1 Cryogenic (warm-up) Heater (LE) - wire at bottom (CERN #1 I-)	W2aQ1	EH8311-	
Q1 Cryogenic (warm-up) Heater (Non-LE) - wire at top (CERN #2 I+)	W1bQ1	EH8321+	17.999 Ω
Q1 Cryogenic (warm-up) Heater (Non-LE) - wire at bottom (CERN #2 I-)	W2bQ1	EH8321-	

Technician(s) _____ Date 10/25/04

Using the Hewlett Packard HP3457A digital multimeter, measure the Protection (Strip) Heater Resistance for Q1.

Q1 Protection (Strip) Heater Resistance					
Fermi	**CERN**	**KEK**	**Description**	**Limit**	**Resistance**
H1aQ1	**YT1111+**	**HA1**	**Circuit A**	Ω	30.871 Ω
H2aQ1	**YT1111-**	**HA2**			
H1bQ1	**YT1121+**	**HB1**	**Circuit B**	Ω	30.897 Ω
H2bQ1	**YT1121-**	**HB2**			

Technician(s) _____ Date 10/25/04

8.2 Using the HP4284A, connect power thru the corrector Power Leads (HA1 and HB1 to measure Q1-H1 or VA1 and VB1 to measure Q1-V1). Connect the Sense Leads as shown in table below and record resistance.

MCBX Corrector Coil Taps			
Component	**FermiLab Label**	**CERN Label**	**Resistance**
Q1-H1	**VTH1**	**EE8121**	21.43 SNG
	HA1	**N/A**	~~156.98~~ Ω
Q1-V1	**VTV1**	**EE8111**	17.46
	VA1	**N/A**	~~46.287~~ Ω

Technician(s) 10/25/04 Date

TRR# 9.0 Final Preparations
1617
(see Next Page)

9.0 Production Complete

9.1 Process Engineering verify that the LHC Cryostat Assembly Traveler (5520-TR-333755) is accurate and complete. This shall include a review of all steps to ensure that all operations have been completed and signed off. Ensure that all Discrepancy Reports, Nonconformance Reports, Repair/Rework Forms, Deviation Index and dispositions have been reviewed by the Responsible Authority for conformance before being approved.

Comments:

J. Agostini
Process Engineering/Designee

SEP 2 0 2005
Date

9.0 Final Preparations

9.1 Prepare the Power Leads to be cut by measuring and marking the appropriate cutoff location as per Q1 Module Assembly (ME-369894). Remove any Kapton insulation from the end of the lead to approximately 4 inches beyond the cutoff mark. Clamp the Leads, individually, using the "Lead Clamp Block Tooling".

O. Fuang — Technician(s) — 10-25-04 — Date

9.2 Cut the Power Leads as per Q1 Module Assembly (ME-369894).

O. Fuang — Technician(s) — 10-25-04 — Date

9.3 Fuse the Ends of the Leads.

[illegible] — Weldor(s) — 10/25/04 — Date

9.4 Remove Clamps when fusing is complete and it is safe to do so.

O. Fuang — Technician(s) — 10-25-04 — Date

9.5 Install the Vinyl Flange Covers (MA-390491), (MA-390492), (MA-390493), (MA-390494), & the Alignment Fiducial Covers (MA-390495).

[illegible] — Technician(s) — 10/25/04 — Date

TRR ADD STEP FOR FINAL LK TEST

PART NO.		SCALE UNITS BEFORE HELIUM PROBE	SCALE UNITS WHILE ENCLOSURE FLOODING	DETERMINATION OF MINIMUM DETECTABLE LEAK				
DATE TIME	OPERATOR'S LAST NAME			MDS ÷ ((Response - Bckgnd) ÷ Leak Value) = MDL				
	SWIDCIDG			2	6 E-7	2.2 E-8	4.75 E-8	2.87 E-8

TD - Engineering Fabrication Component Kit List

ORIGINAL

Process Engineering

Component Serial No.: LQXA02

Kit submitted by: John Szostak | Ext. 2003

Fermi ID No.: 02943C

Date submitted: 9-Mar-04

Need date: 17-Mar-04

Deliver to: ICB

Use with Traveler No.: 333755

Job No.: 248

M&S task number: 300 | 1.1.1.3.4

Drawing Title: Q1 CRYOSTAT GENERAL ASSEMBLY

Drawing No.: ME-390127 | Rev. E

Drawing Title: Q1 CRYOSTAT ASSEMBLY - INTERNAL PIPING

Drawing No.: ME-390174 | Rev. B

Drawing Title: *Q1 SUSPENSION SYSTEM INSTALLATION*

Drawing No.: *ME-390525* | *Rev. **

Material Control

Parts available

Verified by: M. Schmidt

Fermi ID No.: 4223

Date submitted to stockroom: 10-Mar-04

Parts issued

Issued by: [illegible]

Fermi ID No.: 11969

Date issued: 3/16/04

Parts received by E&F: [illegible]

Fermi ID No.: 0315

Date received by E&F: 3/16/04

	Description	Dwg Size	Number	Rev	Unit	Quantity Required	Location	Quantity Issued	E&F Verified	Routing Form Number	Spares Number / Comment
1	CORRUGATED TUBE SUPPORT	MC	390028	*	EA	6	R9,S1,L4	6	✓	77647	116 pcs.
2	CORRUGATED TUBE RESTRICTOR	MC	390029	A	EA	1	R9,S1,L4	1	✓	77724	59 pcs.
3	END FLANGE	MC	390031	B	EA	1	IB4 Bin	1	✓	77209	60 pcs.
4	PUMPING LINE END FLANGE	MC	390032	B	EA	1	IB4 Bin	1	✓	77210	67 pcs.
5	COOLDOWN LINE END FLANGE	MB	390033	B	EA	1	IB4 Bin	1	✓	77208	51 pcs.
6	ADJUSTING SCREW	MB	390039	C	EA	8	IB4 Bin	8	✓	~~81246~~ 81148	119 pcs.
7	*SUSPENSION SYSTEM SUPPORT RING ASSEMBLY*	*ME*	*390043*	*B*	*EA*	*1*	NT02407	1	✓	76906	5 pcs.
8	*SUSPENSION SYSTEM SUPPORT RING ASSEMBLY*	*ME*	*390043*	*B*	*EA*	*2*	NT02407	2	✓	76906	5 pcs.
9	*SUSPENSION SYSTEM SUPPORT PIN*	*MB*	*390047*	*B*	*EA*	*2*	R8,S2,L1	2	✓	81236	94 pcs.

ORIGINAL

TD - Engineering Fabrication Component Kit List

	Description	Dwg Size	Number	Rev	Unit	Quantity Required	Location	Quantity Issued	E&F Verified	Routing Form Number	Spares Number / Comment
10	*SUSPENSION SYSTEM SUPPORT PIN*	*MB*	*390047*	*B*	*EA*	*4*	R8,S2,L1	4	✓	81236	94 pcs.
11	SUPPORT BAND	ME	390083	A	EA	4	P/N	4	✓	77146	100 pcs.
12	RETAINER	MA	390086	*	EA	16	IB4 Bin	16	✓	81241	354 pcs.
13	Q1 - Q3 PIPE SUPPORT ASSEMBLY	MD	390092	A	EA	3	P/N	3	✓	77617	51 pcs.
14	*TIE BAR SHIM, 6.4 mm*	*MB*	*390118*	*	*EA*	*4*	IB4 Bin	4	✓	77204	43 pcs.
15	*TIE BAR SHIM, 2.4 mm*	*MB*	*390119*	*	*EA*	*4*	IB4 Bin	4	✓	77203	42 pcs.
16	*TIE BAR SHIM, 0.8 mm*	*MB*	*390120*	*	*EA*	*4*	IB4 Bin	4	✓	77202	42 pcs.
17	VACUUM VESSEL ASSEMBLY	ME	390122	E		ICB HAS	-		—		
18	TIE BAR RETAINING CLAMP	MB	390136	*	EA	4	IB4 Bin	4	✓	77132	97 pcs.
19	OUTER SHELL PIPE	MD	390177	*	EA	1	P/N	1	✓	79998	8 pcs.
20	END PLATE	MB	390178	*	EA	1	R1,2,3	1	✓	79644	17 pcs.
21	Q1 PUMPING LINE PIPE	MB	390183	*	EA	1	P/N	1	✓	80000	8 pcs.
22	Q1 PUMPING LINE RETURN FITTING	MC	390184	*	EA	1	R7,3,2	1	✓	80036	9 pcs.
23	Q1 IP END COLLECTION POT WELDMENT	ME	390185	*	EA	1	R7,S2,L2	1	✓	79584	8 pcs.
24	Q1 4.5K INTERCEPT LINE TUBE	MB	390192	*	EA	3	IB4	3	✓	81302	24 pcs.
25	Q1 COOLDOWN LINE WELDMENT	MC	390193	A	EA	1	P/N	1	✓	80001	8 pcs.
26	TARGET HOLDER	MD	390211	B	EA	4	R10,1,1	4	✓	74751	84 pcs.
27	*SUSPENSION SYSTEM SUPPORT PIN SHIM - 1mm*	*MA*	*390275*	*A*	*EA*	*8*	IB4 Bin	8	✓	76911	132 pcs.
28	*SUSPENSION SYSTEM SUPPORT PIN SHIM - 1mm*	*MA*	*390275*	*A*	*EA*	*16*	IB4 Bin	16	✓	76911	132 pcs.

TD - Engineering Fabrication Component Kit List

ORIGINAL

	Description	Dwg Size	Number	Rev	Unit	Quantity Required	Location	Quantity Issued	E&F Verified	Routing Form Number	Specs Number / Comment
29	*SUSPENSION SYSTEM SUPPORT PIN SHIM - 0.5mm*	*MA*	*390276*	*	*EA*	*8*	IB4 Bin	8	✓	76910	144 pcs.
30	*SUSPENSION SYSTEM SUPPORT PIN SHIM - 0.5mm*	*MA*	*390276*	*	*EA*	*16*	IB4 Bin	16	✓	76910	144 pcs.
31	*SUSPENSION SYSTEM SUPPORT PIN BOLTS*	*MA*	*390277*	*	*EA*	*8*	IB4 Bin	8	✓	81171	392 pcs.
32	*SUSPENSION SYSTEM SUPPORT PIN BOLTS*	*MA*	*390277*	*	*EA*	*16*	IB4 Bin	16	✓	76913	392 pcs.
33	WELD CONNECTOR ADAPTER	MC	390278	*	EA	1	R1,S1,L3	1	✓	79471	17 pcs.
34	*SUSPENSION MTG BRACKET*	*MD*	*390279*	*	*EA*	*4*	R9,S1,L1	4	✓	77180	68 pcs.
35	COOLING PIPE BRACKET	MB	390316	A	EA	4	IB4 Bin	4	✓	77195	84 pcs.
36	COOLING PIPE CLAMP	MB	390317	*	EA	8	IB4 Bin	8	✓	77196	175 pcs.
37	*TWO PIECE CLAMP ON COLLAR*	*MA*	*390321*	*A*	*EA*	*4*	IB4 Bin	4	✓	76912	84 pcs.
38	ALUMINUM SPACER	MA	390373	*	EA	32	IB4 Bin	32	✓	76874	912 pcs.
39	Blank Non-Rotatable Conflat Flange, 4.62" OD 304 SS	MA	390374	*	EA	8	R8,3,4	8	✓	78987	176 pcs.
40	COPPER GASKET	MA	390375	*	EA	8	IB4 Bin	8	✓	78429	175 pcs.
41	BOLT SET, HEX HEAD, 5/16 - 24 x 1.25 w/ WASHER	MA	390376	*	EA	80	IB4 Bin	80	✓	72306	1844 pcs.
42	WASHER .656" ID x 1.38" OD x .13" THK, STN STEEL	MA	390377	*	EA	8	IB4 Bin	8	✓	77866	187 pcs.
43	RETAINING WASHER	MA	390378	*	EA	232	IB4 Bin	232	✓	81136	5828 pcs.
44	INTERCEPT LINE PIPE STOP	MA	390379	A	EA	6	IB4 Bin	6	✓	78894	187 pcs.
45	CORRUGATED TUBE WELDMENT	ME	390393	*	EA	1	P/N	1	✓	79282	8 pcs.
46	*Q1 / Q3 TIE BAR ASSEMBLY*	*MC*	*390400*	*	*EA*	*2*	P/N	2	✓	77976	34 pcs.
47	REFERENCE SOCKET CUP (Furnished by CERN)	MA	390426	*	EA	8	R1,3,5	8	✓	77884	192 pcs.

TD - Engineering Fabrication Component Kit List

ORIGINAL

	Description	Dwg Size	Number	Rev	Unit	Quantity Required	Location	Quantity Issued	E&F Verified	Routing Form Number	Spares Number / Comment
48	COOLING TUBE WELDMENT	MD	390431	A	EA	2	P/N	2	✓	79280	16 pcs.
49	IP END SECTION	ME	390433	*	EA	2	Site 38	2	✓	79610	16 pcs.
50	NON-IP END SECTION	ME	390434	*	EA	2	P/N	2	✓	79611	16 pcs.
51	Q1 - Q3 CENTER SECTION	ME	390435	*	EA	2	P/N	2	✓	79383	34 pcs.
52	COOLING PIPE CROSSOVER	MD	390466	A	EA	1	R8,S1,L2	1	✓	79201	8 pcs.
53	COOLING PIPE CROSSOVER CONNECTOR	MA	390467	*	EA	2	IB4 Bin	2	✓	78930	16 pcs.
54	*SUSPENSION SYSTEM SUPPORT PIN SHIM 0.13 mm*	*MA*	*390480*	*	*EA*	*8*	R2,S2,L4	8	✓	79121	385 pcs.
55	*SUSPENSION SYSTEM SUPPORT PIN SHIM 0.13 mm*	*MA*	*390480*	*	*EA*	*16*	R2,S2,L4	16	✓	79121	385 pcs.
56	*SUSPENSION SYSTEM SUPPORT SHIM 0.25 mm*	*MA*	*390481*	*	*EA*	*12*	R2,S2,L4	12	✓	79122	585 pcs.
57	*SUSPENSION SYSTEM SUPPORT SHIM 0.25 mm*	*MA*	*390481*	*	*EA*	*24*	R2,S2,L4	24	✓	79122	585 pcs.
58	Q1 / Q3 PIPE ANCHOR	MC	390486	*	EA	1	R8,S1,L4	1	✓	79387	17 pcs.
59	Q1 SHIELD MLI INNER BLANKET	ME	390487	*	EA	1	Site 38	1	✓	79869	4 pcs.
60	Q1 SHIELD MLI OUTER BLANKET	ME	390488	*	EA	1	Site 38	1	✓	79870	4 pcs.
61	*Q1/Q3 COLD MASS END BLANKET*	*ME*	*390521*	*	*EA*	*1*	Site 38	1	✓	79874	14 pcs.
62	*Q1/Q3 COLD MASS MID BLANKET*	*ME*	*390522*	*	*EA*	*1*	Site 38	1	✓	79875	9 pcs.
63	*Q1 INSULATION, COLD MASS IP END BLANKET*	*ME*	*390523*	*	*EA*	*1*	Site 38	1	✓	79876	6 pcs.
64	*Q1 COLD MASS WELDED ASSEMBLY*	*ME*	*390526*	*C*		*ICB HAS*	-		—		
65	*SHIELDING BLOCK*	*MB*	*390534*	*A*	*EA*	*2*	R7,1,3	2	✓	79708	16 pcs.
66	TARGET HOLDER, RIGHT	MD	390539	*	EA	2	R8,S1,L3	2	✓	79556	47 pcs.

TD - Engineering Fabrication Component Kit List

ORIGINAL

	Description	Dwg Size	Number	Rev	Unit	Quantity Required	Location	Quantity Issued	E&F Verified	Routing Form Number	Spares Number / Comment
67	TARGET HOLDER, LEFT	MD	390540	*	EA	2	R8,S1,L5	2	✓	79555	47 pcs.
68	Q1 / Q3 MLI END BLANKET	ME	390542	*	EA	1	Site 38	1	✓	79877	14 pcs.
69	Q1 / Q3 MLI MID BLANKET	ME	390543	*	EA	1	Site 38	1	✓	79878	9 pcs.
70	Q1 MLI IP END BLANKET	ME	390544	*	EA	1	Site 38	1	✓	79879	4 pcs.
71	Q1 & Q3 INSTALLATION TIE-ROD SHORT THREADED ROD	MA	390639	*	EA	2	R2,2,2	2	✓	81098	22 pcs.
72	Q1 NON-IP END ALIGNMENT FIDUCIAL SPACER	MD	390643	*	EA	2	R1,2,4	2	✓	80333	16 pcs.
73	Q1 VACUUM VESSEL HELIUM GUARD MOUNTING PLATE	MD	390724	*	EA	1	IB4	1	✓	81256	9 pcs.
74	M6 x 45.0mm LG HEX SHCS, 18-8 STN STEEL	MA	393017	*	EA	4	IB4 Bin	4	✓	77846	56 pcs.
75	M8 x 25.0mm LG SHCS, 18-8 STN STEEL	MA	393018	*	EA	8	IB4 Bin	8	✓	76747	173 pcs.
76	M8 x 45.0mm LG SHCS, 18-8 STN STEEL	MA	393019	*	EA	8	IB4 Bin	8	✓	76748	52 pcs.
77	*M8 x 50.0 mm LG SHCS 18-8 STN STEEL*	*MA*	*393020*	*	*EA*	*12*	IB4 Bin	12	✓	77847	98 pcs.
78	M16-2 x 70.0 mm LG HEX SHCS, 18-8 STN STEEL	MA	393021	*	EA	8	IB4 Bin	8	✓	77840	231 pcs.
79	M6 HEX NUT, 18-8 STN STEEL	MA	393022	A	EA	4	IB4 Bin	4	✓	78236	58 pcs.
80	M8 HEX NUT, 18-8 STN STEEL	MA	393023	*	EA	16	IB4 Bin	16	✓	78890	256 pcs.
81	*M8 HEX NUT, 18-8 STN STEEL*	*MA*	*393023*	*	*EA*	*12*	IB4 Bin	12	✓	78890	256 pcs.
82	M6 FLAT WASHER, 18-8 STN STEEL	MA	393024	*	EA	32	IB4 Bin	32	✓	78891	732 pcs.
83	M6 FLAT WASHER 18-8 STN STEEL	MA	393024	*	EA	4	IB4 Bin	4	✓	78891	732 pcs.
84	M8 FLAT WASHER, 18-8 STN STEEL	MA	393025	*	EA	16	IB4 Bin	16	✓	76745	1018 pcs.
85	*M8 FLAT WASHER, 18-8 STN STEEL*	*MA*	*393025*	*	*EA*	*12*	IB4 Bin	12	✓	76745	1018 pcs.

ORIGINAL

TD - Engineering Fabrication Component Kit List

	Description	Dwg Size	Number	Rev	Unit	Quantity Required	Location	Quantity Issued	E&F Verified	Routing Form Number	Spares Number / Comment
86	M6 LOCK WASHER 18-8 STN STEEL	MA	393026	*	EA	4	IB4 Bin	4	✓	77850	56 pcs.
87	M8 LOCK WASHER, 18-8 STN STEEL	MA	393027	*	EA	16	IB4 Bin	16	✓	76744	1041 pcs.
88	*M8 LOCK WASHER, 18-8 STN STEEL*	*MA*	*393027*	*	*EA*	*12*	IB4 Bin	12	✓	76744	1041 pc.s
89	BUTTON HEAD CAP SCREW, M5 x 16.0 LG	MA	393028	*	EA	232	IB4 Bin	232	✓	76826	5718 pcs.
90	M10-1.5 x 25mm LG HEX SHCS 18-8 STN STEEL	MA	393036	*	EA	24	IB4 Bin	24	✓	77899	596 pcs.
91	M6-1.0 x 35mm LG HEX SHCS 18-8 STN STEEL	MA	393045	*	EA	16	IB4 Bin	16	✓	78886	388 pcs.
92	JAM NUT (LH)	MA	393046	*	EA	4	IB4 Bin	4	✓	80074	102 pcs.
93	M8 x 30mm LG HEX SPRING PIN 18-8 STN STEEL	MA	393048	*	EA	8	IB4 Bin	8	✓	78887	194 pcs.
94	M10 LOCK WASHER, 18-8 STN STEEL	MA	393220	*	EA	24	IB4 Bin	24	✓	80024	776 pcs.
95	STD ANSI HEX THIN JAM NUT 1/2-13 UNC	MA	393225	*	EA	8	IB4 Bin	8	✓	80073	244 pcs.
96	STD HEX COUPLING NUT 1/2-13 UNC (RH-LH)	MA	393226	*	EA	4	IB4 Bin	4	✓	80075	100 pcs.
97	THREADED ROD 1/2-13 UNC - 24 x 6 FT LONG	MA	393227	*	EA	2	R7,2,4	2	✓	80061	50 pcs.
98	THREADED ROD 1/2-13 UNC - 24 (LH) x 3 FT LONG	MA	393228	*	EA	2	R1,2,3	2	✓	80072	48 pcs.
Q1 / Q3 INSTALLATION TIE ROD ASSEMBLY		MC	390638	*							
FIXED SUPPORT ASSEMBLY		*ME*	*390041*	*D*							
SLIDING SUPPORT ASSEMBLY		*ME*	*390042*	*C*							
Q1 INSULATED SHIELD AND PIPING ASSEMBLY		ME	390173	A							
Q1 INTERNAL PIPING ASSEMBLY (SEPARATE SHEET)		ME	390174	B							
Q1 HEAT EXCHANGER ASSEMBLY		ME	390175	*							

ORIGINAL

TD - Engineering Fabrication Component Kit List

	Description	Dwg Size	Number	Rev	Unit	Quantity Required	Location	Quantity Issued	E&F Verified	Routing Form Number	Specs Number / Comment
	OUTER TUBE WELDMENT	ME	390176	*							
	CORRUGATED TUBE ASSEMBLY	ME	390179	*							
	Q1 PUMPING LINE WELDMENT	ME	390182	*							
	Q1 THERMAL SHIELD ASSEMBLY	ME	390429	C							
	COLD MASS INSULATION ASSEMBLY	*ME*	*390524*	*							
	Q1 COLD MASS ASSEMBLY (SEPARATE SHEET)	ME	390525	*							
	Q1 PIPING INSULATION	ME	390541	*							

ADDITIONAL PARTS REQUEST

ADDITIONAL PARTS REQUEST FORM SHALL BE USED TO ACCESS ALL ITEMS FROM INVENTORY WITH THE EXCEPTION OF PARTS KITS.

THIS FORM MUST BE SIGNED BY AN ACQUISITIONER BEFORE BRINGING TO THE STOCKROOM

MAGNET OR COIL # *LQXA02 - Q1 Magnet*

REQUESTED BY *S. Gould*

DATE REQUESTED *5/3/04*

DELIVER TO *S. Gould - ICB*

BUDGET CODE *LCD 300/1.1.1.3.4*

NEED BY DATE *5/3/04*

JOB TICKET # _____

MMR # _____

MACHINE SHOP REQ. # _____

PO # _____

PURCHASE RELEASE # _____

OTHER _____

PARTS STATUS (CHECK ONE)

- ☐ DEFECTIVE PARTS ISSUED
- ☐ PARTS SCRAPPED
- ☐ A/R ITEMS
- ☐ DEFECTIVE ASSEMBLY
- ☐ MISSING FROM KIT ALREADY ISSUED
- ☒ INDIVIDUAL PARTS
- ☐ CONSUMABLES
- ☐ PARTS LOST

ACQUISITIONER SIGNATURE Marsha Schmidt **ID#** 4223 **DATE** 5/3/04

PLEASE INDICATE REVISION REQUIRED

Info 9 p.i.

LOCATION	PART #	REV	QTY	UOM	DESCRIPTION	RF #	SIR #
IB4	*MC 390184*	-	*1*	*Each*	*IP End Elbow- 3.37*	81587	

STOCKROOM SIGNATURE Marsha Schmidt **ID#** 4223 **DATE** 5/3/04

PARTS DELETED FROM DATABASE _____ **ID#** _____ **DATE** _____

A COPY OF THIS FORM IS TO BE INCLUDED IN WITH THE TRAVELER

PARTS RECEIVED BY _____ **ID#** 4825 **DATE** 5/3/04

ADDITIONAL PARTS REQUEST

ADDITIONAL PARTS REQUEST FORM SHALL BE USED TO ACCESS ALL ITEMS FROM INVENTORY WITH THE EXCEPTION OF PARTS KITS.

THIS FORM MUST BE SIGNED BY AN ACQUISITIONER BEFORE BRINGING TO THE STOCKROOM

MAGNET OR COIL # *LHC Q1 Cryostat* (LQXAφ2) (LQXAφ3) (LQXAφ4)

DATE REQUESTED *10/13/04*

BUDGET CODE *300/1.1.1.3.4(LCD)*

JOB TICKET #

MACHINE SHOP REQ. #

PURCHASE RELEASE #

REQUESTED BY *Steve Gould*

DELIVER TO *ICB*

NEED BY DATE *10/13/04*

MMR #

PO #

OTHER

PARTS STATUS (CHECK ONE)

- ☐ DEFECTIVE PARTS ISSUED
- ☐ PARTS SCRAPPED
- ☐ A/R ITEMS
- ☐ DEFECTIVE ASSEMBLY
- ☐ MISSING FROM KIT ALREADY ISSUED
- ☒ INDIVIDUAL PARTS
- ☐ CONSUMABLES
- ☐ PARTS LOST

ACQUISITIONER SIGNATURE Marsha Schmidt **ID#** 4223 **DATE** 10/13/04

PLEASE INDICATE REVISION REQUIRED

In Stock	LOCATION	PART #	REV	QTY	UOM	DESCRIPTION	RF #	SIR #
9	R2,3,3	390799 ✓		3	Each	Q1 Tab Assy	82096	
1680	IB#4-BIN	393057 ✓		48	Each	M5 Flat Washer	79215	
1894	IB#4-BIN	393056 ✓		48	Each	M5 Lockwasher	79214	
9	R2,3,3	390801 ✓		3	Each	Q1 Tab Assy	82097	
9	R2,3,3	390795 ✓		3	Each	Q1 Thermal Strap	82131	
9	R2,3,3	390794 ✓		3	Each	Q1 Thermal Strap	82130	
16[illegible]	R2,2,3	390792 ✓		6	Each	Q1 Crossover Tab	81954	
285	IB#4-BIN	393310 ✓		48	Each	M5 Hex Nut	81494	

STOCKROOM SIGNATURE Jeff Bezon **ID#** 1269E **DATE** 10/13/04

PARTS DELETED FROM DATABASE **ID#** **DATE**

A COPY OF THIS FORM IS TO BE INCLUDED IN WITH THE TRAVELER

PARTS RECEIVED BY S Gould **ID#** 4965 **DATE** 10/13/04

ADDITIONAL PARTS REQUEST

ADDITIONAL PARTS REQUEST FORM SHALL BE USED TO ACCESS ALL ITEMS FROM INVENTORY WITH THE EXCEPTION OF PARTS KITS.

THIS FORM MUST BE SIGNED BY AN ACQUISITIONER BEFORE BRINGING TO THE STOCKROOM

MAGNET OR COIL # LHC (LQXA02)

REQUESTED BY Steve Gould

DATE REQUESTED 9/21/04

DELIVER TO ICB

BUDGET CODE 300/1.1.1.3.4(LCD)

NEED BY DATE 9/21/04

JOB TICKET #

MMR #

MACHINE SHOP REQ. #

PO #

PURCHASE RELEASE #

OTHER

PARTS STATUS (CHECK ONE)

- ☐ DEFECTIVE PARTS ISSUED
- ☐ PARTS SCRAPPED
- ☐ A/R ITEMS
- ☐ DEFECTIVE ASSEMBLY
- ☐ MISSING FROM KIT ALREADY ISSUED
- ☒ INDIVIDUAL PARTS
- ☐ CONSUMABLES
- ☐ PARTS LOST

ACQUISITIONER SIGNATURE [signature] ID# 9223 DATE 9/21/04

PLEASE INDICATE REVISION REQUIRED

Stk	LOCATION	PART #	REV	QTY	UOM	DESCRIPTION	RF #	SIR #
100	JB4 Bin	393307		24	Each	M4-.7X20MM HSHCS	81224	
100	JB4 Bin	393308		48	Each	M4 Lock Washer	81828	
242	JB4 Bin	393181		48	Each	M4 Flat Washer	81226	

STOCKROOM SIGNATURE [signature] ID# 12894 DATE 9/21/04

PARTS DELETED FROM DATABASE ID# DATE

A COPY OF THIS FORM IS TO BE INCLUDED IN WITH THE TRAVELER

PARTS RECEIVED BY [signature] ID# 4965 DATE 9/21/04

ADDITIONAL PARTS REQUEST

ADDITIONAL PARTS REQUEST FORM SHALL BE USED TO ACCESS ALL ITEMS FROM INVENTORY WITH THE EXCEPTION OF PARTS KITS.

THIS FORM MUST BE SIGNED BY AN ACQUISITIONER BEFORE BRINGING TO THE STOCKROOM

MAGNET OR COIL # LHC (LQXA #2)

REQUESTED BY Steve Gould

DATE REQUESTED 9/21/04

DELIVER TO ICB

BUDGET CODE 300/1.1.1.3.4(LCD)

NEED BY DATE 9/21/04

JOB TICKET #

MMR #

MACHINE SHOP REQ. #

PO #

PURCHASE RELEASE #

OTHER

PARTS STATUS (CHECK ONE)

- ☐ DEFECTIVE PARTS ISSUED
- ☐ PARTS SCRAPPED
- ☐ A/R ITEMS
- ☐ DEFECTIVE ASSEMBLY
- ☐ MISSING FROM KIT ALREADY ISSUED
- ☒ INDIVIDUAL PARTS
- ☐ CONSUMABLES
- ☐ PARTS LOST

ACQUISITIONER SIGNATURE Marko Schmidt ID# 4223 DATE 9/21/04

PLEASE INDICATE REVISION REQUIRED

STK 100

LOCATION	PART #	REV	QTY	UOM	DESCRIPTION	RF #	SIR #
IB4Bin	393369	-	24	Each	M4-.7 Nut	81826	

STOCKROOM SIGNATURE [signature] ID# 12698 DATE 9/22/04

PARTS DELETED FROM DATABASE ID# DATE

A COPY OF THIS FORM IS TO BE INCLUDED IN WITH THE TRAVELER

PARTS RECEIVED BY [signature] ID# 4965 DATE 9/22/04

Revision Request Control Number: 1617

Specification Number: 5520 - TR - 333755 Current Revision: NONE

Traveler or Document Title LHC Q1 LQXA Cryostat Final Assembly Traveler

Step #/Description of Revision:

1.4 Removed Step. "All personnel performing steps in this traveler must have documented training for this traveler and associated operating procedures."
3.6 Added Step. "Weld the Helium Guard Mounting Plate (MD-390724) to the Vacuum Vessel (ME-390122) as per Q1 Vacuum Vessel Assembly(ME-390122)." per LQXA01 and Tom Page.
4.0 Removed Step. "Suspension System Assembly" Moved to Q1 Module Assembly Traveler per Jim Rife and Tom Page. (Subsequent added steps reflect New Step Numbers)
4.0 Modified Steps. Modified "Piping Assembly" steps from step 4.11 to 4.53 per Tom Page.
5.7 Modified Step. Changed to "Remove Pipe Supports (MD-390092), Pipe Anchor (MC-390486) and blankets. Wrap blankets in plastic bag to keep clean for later use. Label blankets as they are removed for later positioning." (New Step 4.7)
5.8 Modified Step. Changed to "Install Pipe Supports (MD-390092) and Pipe Anchor (MC-390486) to same locations as in step 4.4 and 4.5 respectively." (New Step 4.8)
5.11 Added Step. "Leak Check the Q1 Thermal Shield Cooling Pipe Crossover (MD-390466) to the Q1 Thermal Shield Cooling Tube Weldment (MD-390431) per ES-107240 and record results in table below." per LQXA01.
6.8 Added Step. "Install Conflat Flanges (MA-390374) w/ Copper Gaskets (MA-390375) and Bolt Set (MA-390376) to Cryostat as per Q1 Cryostat General Assembly (ME-390127)." per LQXA01.
6.9 Added Step. "Install Target Holders (MD-390539), (MD-390540) and (MD-390211) as per Q1 Cryostat General Assembly (ME-390127)." per LQXA01.
6.10 Added Step. "Install Reference Socket Cup (MA-390426) as per Q1 Cryostat General Assembly (ME-390127)." per LQXA01.
6.11 Modified Step. Deleted "...Cutouts will have to be made for the Upper Support Lugs." per LQXA01. (Already cut.) (New Step 5.12)
6.11 Added Step. "Install Q1 Thermal Shield Cooling Pipe Crossover(MD-390466) to Q1 Thermal Shield Cooling Tube Weldment (MD-390431)."
6.12 Added Step. "Weld the Cooling Pipe Crossover Connectors (MA-390467) to the Cooling Tube Weldment (MD-390431) and the ooling Pipe Crossover (MD-390466) as per Q1 Thermal Shield Assembly (ME-390429)." per LQXA01.
7.1 Modified Step. Added new method of measuring Ls &Q per Rodger Bossert.
8.0 Added Step. Final Preparations

John Szostak	Jim Rife	3/10/2004
Originator	Responsible Authority	Date
Revision Incorporated into the Traveler:	John Szostak	7/14/2004
	Revision Incorporated By	Date
Process Engineering Final Review:	Jamie Blowers	7/14/2004
	Process Engineering/Designee	Date

Instructions for the completion of the Revision Request Form

Note(s):

Multiple steps may be effected by one Revision Request Form but only one specific Traveler or Document may be effected by each Revision Request Form.

If completing this form by hand, a Revision Request Control Number must be obtained before processing.

If completing this form entirely by electronic means, the printed copy to be filed in the Process Engineering Office is to be initialed by the individual incorporating the Revision Request and the individual who reviewed the Traveler or Document.

Originator Instructions:

1) Specification Number: - Enter the Specification Number of the Traveler or Document to be revised. (Document title is inserted automatically from the spec. #)

2) Current Revision: - Enter the Revision of the Traveler or Document to be revised.

3) Step# / Description of the Revision: - Enter a description of the revision to be made and the step# it applies to, if applicable. If needed to describe the revision attach a copy of the page(s). If the revision is coming from a related document such as a Discrepancy Report or an Engineering Order attach a copy of that document to the Revision Request Form.

4) Originator: - Originator is the person generating the form. (Select Name from List)

5) Responsible Authority: - Responsible Authority is person responsible for the process in question. (Select Name from List)

Process Engineering Office Instructions:

1) Revision Incorporated into the Traveler: - Signature of the individual who incorporated the revision.

2) Process Engineering Final Review: - Review the Traveler or Document revised, sign and date the form. The original completed Revision Request Form will be retained by the Process Engineering Office in the Revision Request Binder.

Revision Request Control Number: 1705

Specification Number: 5520 - TR - 333755 Current Revision: C

Traveler or Document Title LHC Q1 LQXA Cryostat Final Assembly Traveler

Step #/Description of Revision:

1.6 Added Step. "Protect the bellows during all stages of production." DR No. HGQ-0500.
3.4 Modified Step. Changed to "Attach the Leak Check sticker for the Vacuum Vessel Assembly (ME-390122) per ES-107240 to the table below." Per DR No. HGQ-0469.
4.10 Modified Step. Changed to "Weld the Retainer Clips (MA-390103) to the Cold Mass Outer Shell as per Q1 Internal Piping Assembly (ME-390174)." Per LQXA03.
4.12 Modified Step. Changed to "Clean the Heat Exchanger Outer Shell Pipe (MD-390176), Pumping Line Pipe (MB-390147), Cool Down Pipe (MB-390146) and the 4.5K Intercept Line Tubes (MB-390192) with Ethyl Alcohol (Fermi stock 1920-0550) and Kimwipes (Fermi stock 1660-2500) or equivalent." DR No. HGQ-0479.
4.35 Added Step. "Install the Fiducial Mounting Blocks (MB-390808) per Q1 Cold Mass Welded Assembly (ME-390526)."
4.36 Added Step. "Weld the Fiducial Mounting Blocks (MB-390808) per Q1 Cold Mass Welded Assembly (ME-390526)."
7.3 Added Step. "If needed, perform a stretched wire measurement of the system, noting the relative position and roll of the three magnetic elements to each other."
8.5 Removed Step. "Install the Vinyl Flange Covers (MA-390491), (MA-390492), (MA-390493), (MA-390494), & the Alignment Fiducial Covers (MA-390495)." Moved to Q1 Shipping Traveler.

John Szostak	Jim Rife	1/18/2005
Originator	Responsible Authority	Date
Revision Incorporated into the Traveler:	John Szostak	2/28/2005
	Revision Incorporated By	Date
Process Engineering Final Review:	Jamie Blowers	2/28/2005
	Process Engineering/Designee	Date

Instructions for the completion of the Revision Request Form

Note(s):

Multiple steps may be effected by one Revision Request Form but only one specific Traveler or Document may be effected by each Revision Request Form.

If completing this form by hand, a Revision Request Control Number must be obtained before processing.

If completing this form entirely by electronic means, the printed copy to be filed in the Process Engineering Office is to be initialed by the individual incorporating the Revision Request and the individual who reviewed the Traveler or Document.

Originator Instructions:

1) Specification Number: - Enter the Specification Number of the Traveler or Document to be revised. (Document title is inserted automatically from the spec. #)

2) Current Revision: - Enter the Revision of the Traveler or Document to be revised.

3) Step# / Description of the Revision: - Enter a description of the revision to be made and the step# it applies to, if applicable. If needed to describe the revision attach a copy of the page(s). If the revision is coming from a related document such as a Discrepancy Report or an Engineering Order attach a copy of that document to the Revision Request Form.

4) Originator: - Originator is the person generating the form. (Select Name from List)

5) Responsible Authority: - Responsible Authority is person responsible for the process in question. (Select Name from List)

Process Engineering Office Instructions:

1) Revision Incorporated into the Traveler: - Signature of the individual who incorporated the revision.

2) Process Engineering Final Review: - Review the Traveler or Document revised, sign and date the form. The original completed Revision Request Form will be retained by the Process Engineering Office in the Revision Request Binder.

Revision Request Control Number: 1763

Specification Number: 5520 - TR - 333755 Current Revision: E

Traveler or Document Title LHC Q1 LQXA Cryostat Final Assembly Traveler

Step #/Description of Revision:

4.58 Modified Step. Changed Drawings to reflect proper location of missing 4.5k Intercept Line.
5.3 Modified Step. Changed "Lift the Cold Mass Assembly and place the IP End (ME-390433) and Non-IP End Shield Sections (ME-390434) on the Insertion Rails." Per Damon Bice.
5.4 Modified Step. Changed to "Insert the Q1 Thermal Shield Mid Section (Middle Shield Section) (ME-390435) and the Support Bands (MD-390083)." Per Damon Bice.
6.6 Modified Step. Changed to "When the Cold Mass is fully inserted, install the "Top" Suspension System Adjusting Screws (MB-390039) and the "Bottom" (C936 Bearing Bronze) Suspension System Adjusting Screws (MB-390878)." Per DR No. 4214.
6.7 Modified Step. Changed to "Using Lower Suspension System Adjusting Screws, raise Cold Mass two (2) full turns." Per Damon Bice.
6.8 Added Step. "Ensure Cold Mass has been adjusted in the Vacuum Vessel and that all eight (8) Adjusting Screw Holes are aligned with threaded holes of Suspension System." (Crew Chief Signoff) Per Damon Bice.
6.8 Removed Step. "Install Conflat Flanges (MA-390374) w/ Copper Gaskets (MA-390375) and Bolt Set (MA-390376) to Cryostat as per Q1 Cryostat General Assembly (ME-390127)." Moved to after Final Cryostat Pipe Survey Measurement. New Step 8.8. Per Damon Bice.
6.11 Added Step. "Install the Support Bracket Assemblies (Qty. 4) (MD-390783) as per Q1 Thermal Shield Assembly (ME-390429)." Per Damon Bice.
6.13 Modified Step. Changed to "Weld the Cooling Pipe Crossover (MD-390466) Connectors (MA-390467) to the Cooling Tube Weldment (MD-390431) as per Q1 Thermal Shield Assembly (ME-390429)." Per Damon Bice. (New Step 6.14.)
7.1 Modified Step. Changed Q1 Resistance table. Moved KEK label resistance check a1-b1 to Nominal resistance group 6.75 Ω to 6.85 Ω. Added MFR Ω column to RTD Table, per Damon Bice.
8.1 Modified Step. Changed to "Prepare the Power Leads and corrector bus to be cut by measuring and marking the appropriate cutoff location as per Q1 Module Assembly (ME-369894). ..."
8.2 Added Step. "Verify the mark has been placed at the appropriate cutoff location as per Q1 Module Assembly (ME-369894)."
8.2 Modified Step. Changed to "IN THE PRESENCE OF THE RESPONSIBLE AUTHORITY, cut the Power Leads and the corrector bus at the appropriate cutoff location (mark) as per Q1 Module Assembly (ME-369894)." (New Step 8.3)
8.7 Removed Step. "Perform a Final Stretched Wire measurement." Moved to New step 8.6.

John Szostak	Jim Rife	8/3/2005
Originator	Responsible Authority	Date
Revision Incorporated into the Traveler:	John Szostak	5/25/2005
	Revision Incorporated By	Date
Process Engineering Final Review:	Bob Jensen	5/25/2005
	Process Engineering/Designee	Date

Instructions for the completion of the Revision Request Form

Note(s):

Multiple steps may be effected by one Revision Request Form but only one specific Traveler or Document may be effected by each Revision Request Form.

If completing this form by hand, a Revision Request Control Number must be obtained before processing.

If completing this form entirely by electronic means, the printed copy to be filed in the Process Engineering Office is to be initialed by the individual incorporating the Revision Request and the individual who reviewed the Traveler or Document.

Originator Instructions:

1) Specification Number: - Enter the Specification Number of the Traveler or Document to be revised. (Document title is inserted automatically from the spec. #)

2) Current Revision: - Enter the Revision of the Traveler or Document to be revised.

3) Step# / Description of the Revision: - Enter a description of the revision to be made and the step# it applies to, if applicable. If needed to describe the revision attach a copy of the page(s). If the revision is coming from a related document such as a Discrepancy Report or an Engineering Order attach a copy of that document to the Revision Request Form.

4) Originator: - Originator is the person generating the form. (Select Name from List)

5) Responsible Authority: - Responsible Authority is person responsible for the process in question. (Select Name from List)

Process Engineering Office Instructions:

1) Revision Incorporated into the Traveler: - Signature of the individual who incorporated the revision.

2) Process Engineering Final Review: - Review the Traveler or Document revised, sign and date the form. The original completed Revision Request Form will be retained by the Process Engineering Office in the Revision Request Binder.

Steps for aligning Q1 beam tube flange.

4.9.1 Measure from the face of the IP end vacuum vessel flange to the face of the IP end suspension system. Record measurement here _____.

4.9.2 Measure from the face of the Non-IP end vacuum vessel flange to the face of the Non-IP end suspension system. Record measurement here _____.

1.0 Install suspension system on magnet.

1.1 Measure from the face of the IP end suspension system to the spot face on the IP end dome. Record measurement here _____.

1.2 Measure from the face of the Non-IP end suspension system to the spot face on the Non-IP end dome. Record measurement here _____.

1.3 Subtract the number recorded in step 4.9.1 from the number recorded in step 1.1. Record the number here _____.

1.4 Subtract the number recorded in step 1.3 from 97.5.
Record the number here _____. This is the size of the spacer for the IP end beam tube flange.

1.5 Subtract the number recorded in step 4.9.2 from the number recorded in step 1.2. Record the number here _____.

1.6 Subtract the number recorded in step 1.5 from 97.5.
Record the number here _____. This is the size of the spacer for the Non-IP end beam tube flange.

1.7 Measure from the spot face on the IP end dome to IP end of the beam tube. Record the number here _____.

1.8 Measure from the spot face on the Non-IP end dome to Non-IP end of the beam tube.
Record the number here _____.

1.9 Add the numbers together from steps 1.7 and 1.8.
Record the number here _____.

1.10 Subtract 30 from the number recorded in step 1.9.
Record the number here _____.

1.11 Subtract the number recorded in step 1.4 from the number recorded in step 1.10.
Record the number here _____.

1.12 Compare the numbers from step 1.11 and step 1.6. These numbers should be the same to within 1 mm. If these numbers do not match, step away from the cold mass and alert the proper authorities

Fermilab

Date: 05/10/2004

EXHIBIT B
Pressure Testing Permit*

Type of Test: [ ]Hydrostatic [X] Pneumatic

Test Pressure 363 psig **Maximum Allowable Working Pressure** 290 psig

Items to be Tested
LHC IRQ cold mass (Q1-2) with the domes and external heat exchanger pipe attached.

Location of Test ICB **Date and Time** 05/10/2004 @ 3:30 pm

Hazards Involved
High pressure gases, unrestrained pipes, potential flying debris.

Safety Precautions Taken
Engineering design and evaluation, limited personnel access, mechanical barricade, relief valve, operate gas from inside of tech. room, use sight glass, etc. to observe pressure gauge.

Special Conditions or Requirements
Test to be performed during non-working hours, only personnel directly involved in the test will be present, the access doors to the high bay area will be locked or guards will be posted to prevent entrance to the area.

Qualified Person and Test Coordinator Thomas Page
Dept/Date Technical Division/ Eng. & Fab.

Division/Section Safety Officer Richard Ruthe Richard Ruthe
Dept/Date TD/ ES&H 5/10/04

Results

Witness _____ **Dept/Date** _____
(Safety Officer or Designee)

* Must be signed by division/section safety officer prior to conducting test. It is the responsibility of the test coordinator to obtain signatures.

Traveler Title:	Specification No:	Revision:	DR No:
LHC Q1 LQXA Cryostat Final Assembly Traveler	333755	None	3974

Step No:	Drawing No:	Routing Form No:	Serial No:	Rework ID:
5.34	390174		LQXA02	0

Discrepancy Description:

This step is out of sequence of the actual way this device was built to this point. This pressure test is done before all the welding is finished on the internal piping.

Originator: Steve Gould

Date: 5/12/2004

Cause of Nonconformance:

Traveler not updated per new procedure.

Responsible Authority: Thomas Page

Date: 5/13/2004

Disposition:

(No disposition has been given as of 5/12/05. This DR will be closed out. - John Szostak 5/12/05)

Responsible Authority: Thomas Page

Date: 5/13/2004

Corrective Action to Prevent Recurrence:

Update traveler per new steps. (TRR No. 1617)

Responsible Authority: Thomas Page

Date: 5/13/2004

Corrective Action/Disposition Verified By: John Szostak

Date: 5/12/2005

Will Configuration be affected?: ☐ YES ☑ NO

Identified problem area:

☐ Material ☐ Manpower ☑ Method ☐ Machine ☐ Measurement

Reviewed By: Bob Jensen

Date: 5/23/2005

Traveler Title:	Specification No:	Revision:	DR No:
LHC Q1 LQXA Cryostat Final Assembly Traveler	5520-TR-333755	None	HGQ-0461

Step No:	Drawing No:	Routing Form No:	Serial No:	Rework ID:
5.34	390174		LQXA02	0

Discrepancy Description:

The bellows on the Non-IP end with the hypertronics connector in it was damaged during the pressure test. The convulusions were twisted and bulged. The pressure test did pass at 375 psi and at 75 psi.

Originator: Steve Gould

Date: 5/12/2004

Cause of Nonconformance:

The bellows was not restrained properly during the pressure test.

Responsible Authority: Thomas Page

Date: 5/13/2004

Disposition:

The bellows is usable provided it passes the leak check.

Responsible Authority: Thomas Page

Date: 5/13/2004

Corrective Action to Prevent Recurrence:

Flatten the bellows completely before pressure testing the Cold Mass Assembly. This step should be added to the traveler as well as a sign off by a responsible authority. (TRR No. 1617)

Responsible Authority: Thomas Page

Date: 5/13/2004

Corrective Action/Disposition Verified By: John Szostak

Date: 12/6/2004

Will Configuration be affected?: ☐ YES ☑ NO

Identified problem area:

☐ Material ☐ Manpower ☑ Method ☐ Machine ☐ Measurement

Reviewed By: Bob Jensen

Date: 12/6/2004