Document ID: 1966

LHC Q1 LMQXA Cold Mass Module Assembly Traveler

333754 / Rev. A

Job No:	**248**
E + F Project/Task No.:	**300/1.1.1.6.2**
M + S Project/Task No.:	**300/1.1.1.6.2**

Place This Side Down For Scanning!!!

LMQXA03-0

Document ID:

1966

Job No.:

248

Project/Task No.

300/1.1.1.6.2

Series:

LQXA

Serial No:

LMQXA03

Rework ID:

0

Specification No.:

333754

Revision:

A

LMQXA03-0

Fermi National Accelerator Laboratory
Batavia, IL 60510

LARGE HADRON COLLIDER
Q1 - LMQXA
COLD MASS MODULE ASSEMBLY TRAVELER

Reference Drawing(s):
Q1 Cold Mass Welded Assembly (ME-390526)
Q1 Module Assembly (ME-369894)

Project/Task Number: *300/1.1.1.6.2*

Released By: *John Szostak* **Magnet/Device Series:** *LQXA*

Date Issued: *4/13/2004 9:29:49 AM* **Scanned Pages:** 89

Prepared by: J. Szostak

Title	Signature	Date
TD / E&F Process Engineering	*Bob Jensen* Bob Jensen / Designee	*2/19/04*
TD / LHC Production Supervisor	*Jim Rife* Jim Rife / Designee	*2/19/04*
TD / LHC Production Engineer	*Rodger Bossert* Rodger Bossert / Designee	*2/19/04*
TD / LHC Project Engineer Cryostat	*Tom Nicol* Tom Nicol / Designee	*2/19/04*
TD / LHC Project Physicist	*Mike Lamm* Michael Lamm / Designee	*2/19/04*
TD / LHC Program Manager	*Jim Kerby* Jim Kerby / Designee	*2/19/04*

Revision Page (1 of 3)

Revision	Step No.	Revision Description	TRR No.	Date
None	N/A	Initial Release	N/A	10/17/03
A	4.3	Modified Step. Changed to "Configure tooling for End Dome Mounting per (ME-369765, View E-E.)"	1580	2/19/04
	4.5	Modified Step. Changed to "Rotate the Q1 Cold Mass, with the Power Leads facing down, into the proper orientation as shown in Figure 4.5-A." Added New Figure from Rodger Bossert.		
	4.6	Modified Step. Changed to "Perform a stretched wire measurement of the system to align the Cold Mass within ± .2 mR." Changed Signoff to Responsible Authority/Physicist.		
	4.7	Added Step. "Mount the Corrector Coil Mounting Ring (ME-390037) to the Corrector Coil (MD-390312)."		
	4.7	Modified Step. Changed to "Weld Correction Coil Mounting Flange (ME-390037) to Q1 Lead End Plate." (New Step 4.10)		
	4.8	Added Step. "Position and align the Corrector Coil (MD-390312)."		
	4.9	Added Step. "Tack weld the Corrector Coil Mounting Ring (ME-390037) to the Q1 Cold Mass Assembly per Q1 Coldmass Welded Assembly (ME-390526)."		
	4.11	Added Step. "Disassemble the Corrector Coil (MD-390312) from the Corrector Coil Mounting Ring (ME-390037)."		
	5.0	Modified Step. Replaced Figure 5.0-A with New Figure from Rodger Bossert.		
	5.11	Modified Step. Changed to "Construct / Obtain Expansion Loop Assembly per Drawing (MB-369962)." **(New Step 5.2)**		
	5.11	Added Step. "Weld Warm-up Heater Base Plates (MA-360007) and RTD Mount Blocks to End Plates as per Q1 Module Assembly (ME-369894)." **(New Step 5.11)**		
	5.12	Modified Step. Changed to "Solder the lower 8kA bus to Lower Lead as per Q1 Module Assembly Drawing (ME-369894) and Figure **5.0-B**." **(New Step 5.3)**		
	5.13	Modified Step. Changed to "Solder the upper 8kA bus to Upper Lead as per Q1 Module Assembly Drawing (ME-369894) and Figure **5.0-B**." **(New Step 5.4)**		
	5.17	Modified Step. Changed to "Attach Q1 Bus Exit Support Part Numbers to Q1 Lead as per Q1 Module Assembly (ME-369894)." **(New Step 5.8)**		
	5.18	Modified Step. Added Note: "**USE ONLY CERN LABELS ON WIRES.**" Added New Table from Rodger Bossert. **(New Step 5.9)**		
	5.19	Modified Step. Changed to "...Verify that there is sufficient slack in cable to allow for two inches of differential thermal contraction." Replaced Figures with New Figures from Rodger Bossert. **(New Step 5.10)**		
	5.20.1	Removed Step. "Install Warm-up Heater Base Plates (MA-369997) by welding onto in End Plate. (Check each box as Heater is installed.)"		
	5.21.1	Modified Step. Changed to "Attach RTD's (MA-369835) (Qty. 2) to Mounting Blocks as per Q1 Module Assembly (ME-369894)." **(New Step 5.13.1)**		
	5.22	Modified Step. Added "Record the resistance data from the Manufacturer's Traveler below. Compare RTD resistance test results to the resistance results from the Manufacturer's Traveler. Ensure RTD resistances are within **5Ω**. Attach the Manufacturer's RTD papers at the end of this traveler." Modified Tables to show comparison of RTD resistance. Deleted Wire Nos. from Table. Only CERN Labels will be used. **(New Step 5.14)**		

Revision Page (2 of 3)

Revision	Step No.	Revision Description	TRR No.	Date
A (continued)	5.23	Modified Step. Changed to "Hipot RTD's to 100V. Use Droege Serial No. 910 (FNAL Part No. 51330) or equivalent. Hipot Cryogenic (Warmup) Heaters to 300V. Use Droege Serial No. 910 (FNAL Part No. 51330) or equivalent." Modified Tables to show comparison of Hipot Leakage. Deleted Wire Nos. from Table. Only CERN Labels will be used. **(New Step 5.15)**	1580 (continued)	2/19/04
	5.23	Added Step. "Tack weld bolts and washers for mounting Corrector into place per Q1 Cold Mass Welded Assembly (ME-390526)."		
	5.24	Modified Step. Changed to "Attach Linear Cable Clamp Assembly (ME-430040) to bottom of corrector Magnet." **(New Step 5.16)**		
	5.26	Modified Step. Changed to "Attach the MCBX Corrector Magnet Alignment Tooling (ME-390390) to the MCBX Corrector Magnet (MD-390312). ..." **(New Step 5.18)**		
	5.27	Added Step. "Verify that Top Surface of the Bus as it exits the Magnet is also at the top as it exits the Linear Cable Clamp Assembly."		
	5.28	Added Step. "Attach the Backing Spline (MD-430053) to the Expansion Loop, between the Stabilizer Assembly and the Linear Cable Clamp Assembly, as shown on Q1 Module Assembly (ME-369894)."		
	5.29	Added Step. "Wrap Glass Tape and Kevlar String on the area between the magnet and the Linear Cable Clamp Assembly."		
	5.29	Modified Step. Changed to "Move the MCBX Corrector Magnet (MD-390312) up against the Mounting Ring on the Q1 Magnet, and bolt the MCBX Correction Coil (MD-390312) to the Q1 Cold Mass using the Silver Plated Mounting Screw (MA-390247) and torque bolts to 500 in-lbs. per Note 4 of Q1 Cold Mass Welded Assembly (ME-390526). Shim between the Corrector and Flange as necessary." **(New Step 5.21)**		
	5.30	Added Step. "Attach Face Plate for Corrector Leads (MD-390671) to front surface of Correction Coil."		
	5.32	Modified Step. Added "...The Top of the Bus as it exits the Magnet should face toward the Cold Mass at the stabilizer assembly." **(New Step 5.25)**		
	5.33	Modified Step. Added "...Bus surface facing Cold Mass at stabilizer assembly should be at top as it exits the linear cable clamp assembly." **(New Step 5.26)**		
	5.35	Added Step. "Attach Backing Spline (MD-430053) to area between Linear Cable Clamp Assembly and Lead End Spider Assembly (MD-430042)."		
	5.36	Added Step. "Wrap Glass Tape and Kevlar String on the area between the Linear Cable Clamp Assembly and the Lead End Spider Assembly (MD-430042)."		
	5.37	Modified Step. Changed to "Attach Q1 Lead End Spider Assembly (MD-430042) to Lead Bus (MB-369962) and Corrector Coil Bus as shown in Q1 Module Assembly (ME-369894)." New Step 5.34.		
	6.1	Modified Step. Changed to New Electrical Step by Rodger Bossert.		
	8.1	Modified Step. Changed Part numbers: Beam Tube (MD-369955) and Insulated Beam Tube Assembly for Q1 (MD-369746)."		
	8.3	Modified Step. Changed Part number: Beam Tube (MD-369955).		
	8.4	Modified Step. Changed Part number: Beam Tube (MD-369955).		
	8.5.2	Modified Step. Changed to "Subtract 7725 mm (± 2mm) from the Beam Tube Length, and record here:"		
	9.2	Removed Step. "If needed, perform a stretched wire measurement of the system, noting the relative position and roll of the three magnetic elements to each other." per Tom Page.		

Revision Page (3 of 3)

Revision	Step No.	Revision Description	TRR No.	Date
A (continued)	11.0	Modified Step. Changed to New Electrical Step by Rodger Bossert.	1580 (continued)	2/19/04
	12.0	Modified Step. Changed Hypertronics Labels.		
	12.2	Added Step. "Contact LHC Project Physicist / designee and obtain signature before Hypertronics Cover is installed."		
	12.3	Added Step. "After LHC Project Physicist / designee has signed the above step, complete the installation of the Hypertronics."		
	13.0	Modified Step. Changed to New Electrical Step by Rodger Bossert.		
	3.2	Added Step. "Attach the Certificate of Conformity, for vendor supplied components, and the Quality Record, for vendor supplied components, to this traveler. Verify that the Certificate of Conformity and /or the Quality Record (as required) has been filled out and performed by Fermilab personnel."		

Ensure appropriate memos and specific instructions are placed with the traveler before issuing the sub traveler binder to production.

1.0 General Notes

1.1 All steps that require a sign-off shall include the Technician/Technician(s)s first initial and full last name.

1.2 No erasures or white out will be permitted to any documentation. All incorrectly entered data shall be corrected by placing a single line through the error, initial and date the error before adding the correct data.

1.3 All Discrepancy Reports issued shall be recorded in the left margin next to the applicable step.

TRR# 1612

1.4 All personnel performing steps in this traveler must have documented training for this traveler and associated operating procedures.

1.5 Personnel shall perform all tasks in accordance with current applicable ES&H guidelines and those specified within the step.

1.6 Cover the product/assembly with Green Herculite (Fermi stock 1740-0100) when not being serviced or assembled.

2.0 Parts Kit List

2.1 Attach the completed Parts Kit for this production operation to this traveler. Ensure that the serial number on the Parts Kit matches the serial number of this traveler. Verify that the Parts Kit received is complete.

John J. Gaustat
Process Engineering/Designee

4/13/04
Date

3.0 Q1 Module Alignment

XXX 3.1 Record the serial number for each Magnetic Component Assembly.

Q1 Serial Number: MQXA03

MCBX Serial Number: HCMCBX_001 SI000010

Responsible Authority/Physicist — Date: 4-13-04

3.2 Attach the Certificate of Conformity, for vendor supplied components, and the Quality Record, for vendor supplied components, to this traveler.
Verify that the Certificate of Conformity and /or the Quality Record (as required) has been filled out and performed by Fermilab personnel.

Crew Chief — Date: 4-13-04

4.0 Q1 Magnet Placement (Module Assembly Tooling)

4.1 Configure tooling for Q1 Cold Mass Assembly (ME-390108) per Final Coldmass Assembly Stat – Support and Clamping Fixture (ME-369768).

O. Fianuza — 4 13 04
Technician(s) — Date

4.2 Configure tooling for Corrector Mounting per Cold Mass / Cryostat Station Corrector Support Fixture (ME-369780), 13.780 Diameter Corrector Magnet.

O. Fianuza — 4 13 04
Technician(s) — Date

4.3 Configure tooling for End Dome Mounting per Cold Mass Cryostat Station Final Assembly (ME-369765, View E-E).

O. Fianuza — 4 13 04
Technician(s) — Date

4.4 Move the Q1 Cold Mass to the Cold Mass Module Assembly Tooling, placing it nearest the West End of ICB, with the Lead End of the Magnet facing East as per Q1 Cold Mass Welded Assembly (ME-390526).

O. Fianuza — 4 13 04
Technician(s) — Date

DR → GQ457

4.5 Rotate the Q1 Cold Mass, with the Power Leads facing down, into the proper orientation as shown in Figure 4.5-A.

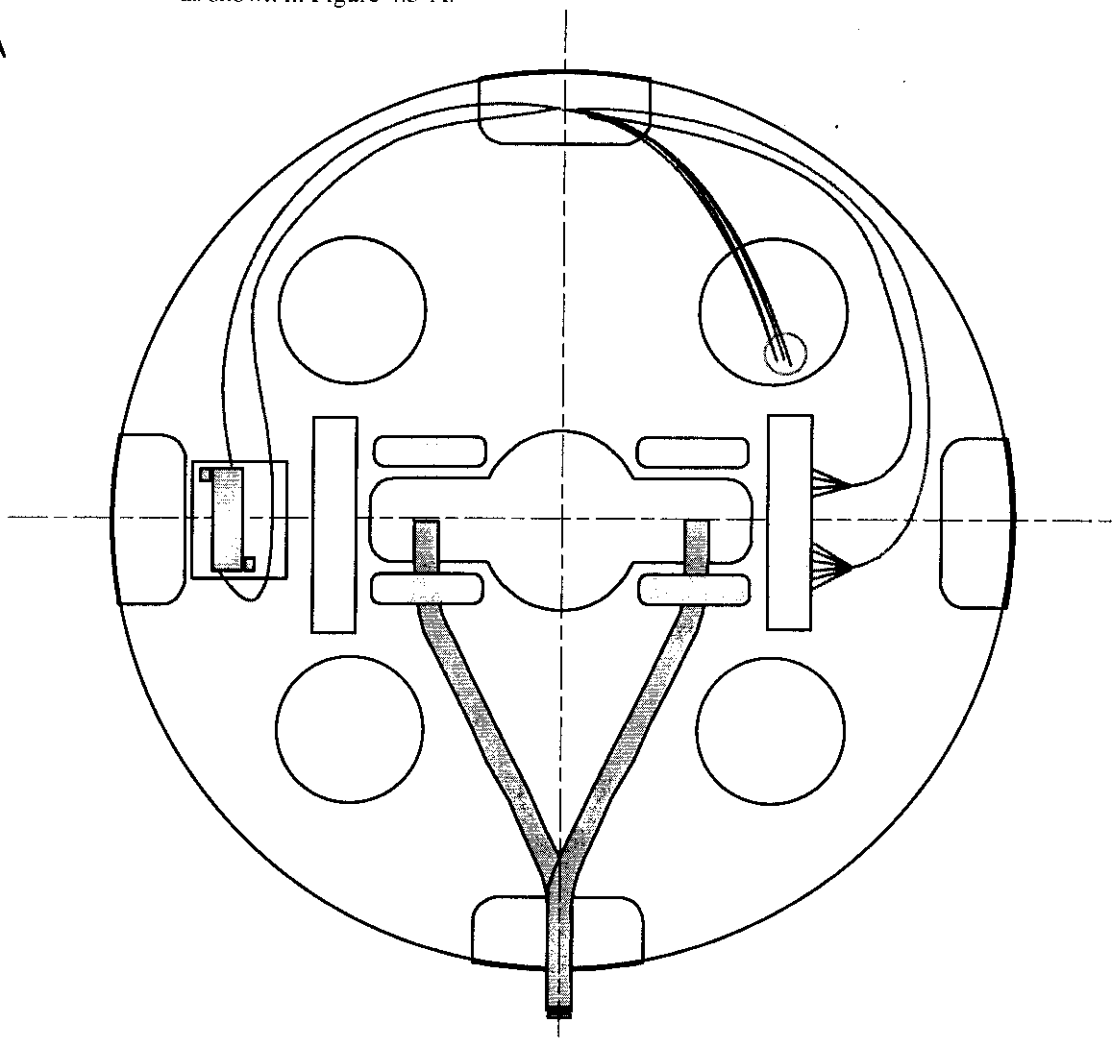

Looking at Lead End of Q1

Figure 4.5-A

Technician(s) _____ Date 4-13-04

XXX 4.6 Perform a stretched wire measurement of the system to align the Cold Mass within ± .2 mR.

Responsible Authority/Physicist _____ Date 86/25/04

4.7 Mount the MCBX Corrector Mounting Ring (ME-390037) to the MCBX Correction Coil (MD-390312).

Technician(s) _____ Date 4-17-04

DR HGQ 0458

4.8 Position and align the MCBX Correction Coil (MD-390312).

Technician(s) _____ Date 4-17-04

4.9 Tack weld the MCBX Corrector Mounting Ring (ME-390037) to the Q1 Cold Mass Assembly (ME-390108) per Q1 Cold Mass Welded Assembly (ME-390526).

Welder _____ Date 4-19-04

4.10 Weld the MCBX Corrector Mounting Ring (ME-390037) to the Q1 Cold Mass Assembly (ME-390108) per Q1 Cold Mass Welded Assembly (ME-390526).

Welder _____ Date 4-20-04

4.11 Disassemble the Corrector Coil (MD-390312) from the MCBX Corrector Mounting Ring (ME-390037).

Technician(s) _____ Date 4-21-04

5.0 Bus & Instrumentation Connection and Assembly

Note(s):

Figure "5.0-A" shows the configuration of Magnet Bus Leads and Corrector Bus Leads in a Q1 Magnet.

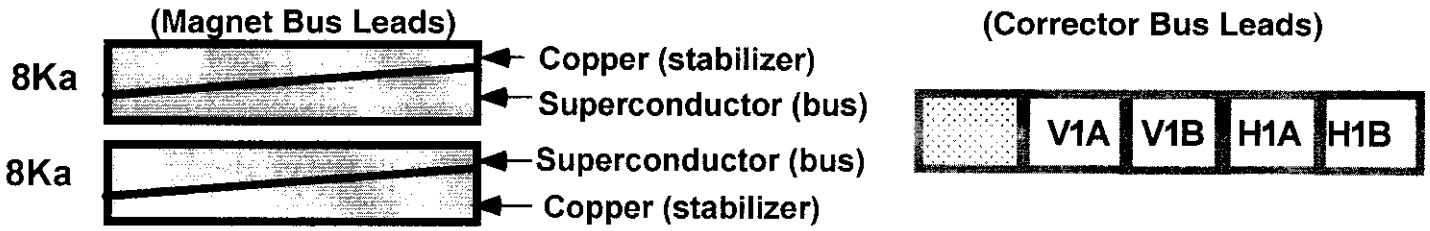

View A-A (Q1 Lead Configuration)

Figure 5.0-A

5.1 Set up the Power Leads for splicing as shown in the Q1 Module Assembly Drawing (ME-369894).

Technician(s) _____ Date 4-21-04

5.2 Construct / Obtain Expansion Loop Assembly per Drawing (MB-369962).

Technician(s) _____ Date 4-21-04

5.3 Solder the Lower 8kA bus to Lower Lead as per Q1 Module Assembly Drawing (ME-369894) and Figure **5.0-B**.

Technician(s) _____ Date 4-21-04

5.4 Solder the Upper 8kA bus to Upper Lead as per Q1 Module Assembly Drawing (ME-369894) and Figure **5.0-B**.

Technician(s) _____ Date 4-21-04

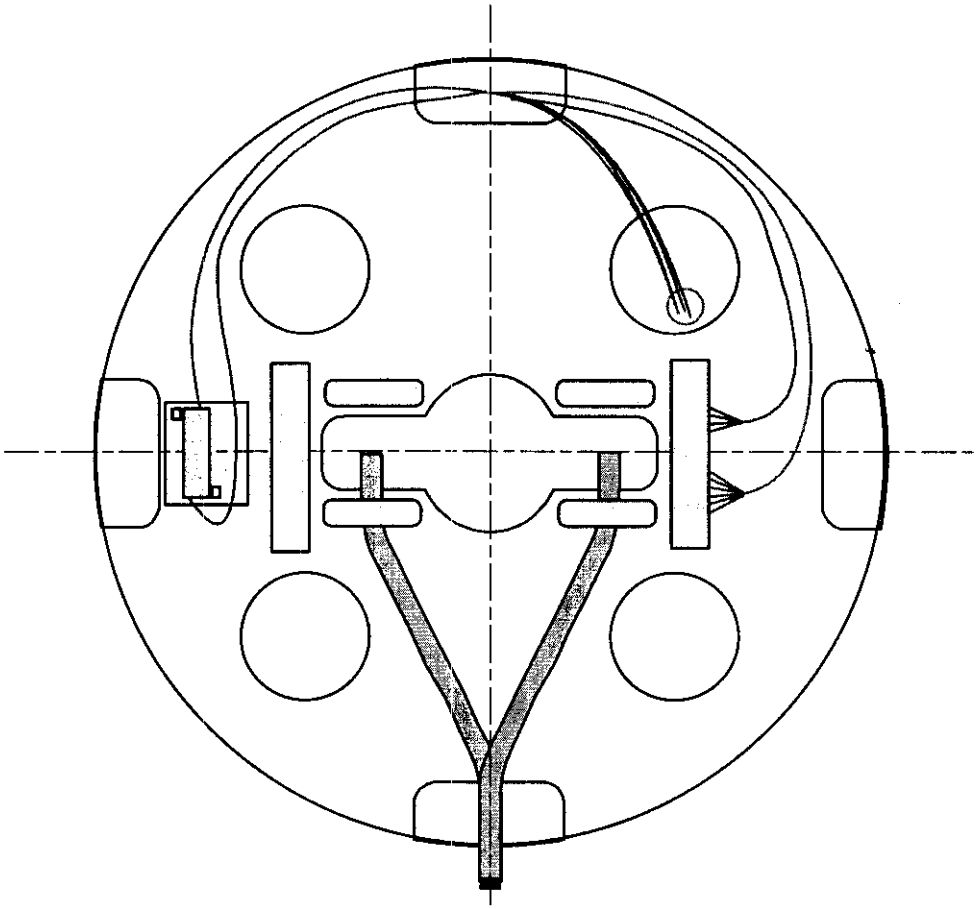

Looking at Lead End of Q1

Figure 5.0-B

5.5 Insulate each splice with 2/3 overlap, .002 x 3/8 wide kapton, (MA-292722).

Technician(s) _____ Date 4-21-04

5.6 Insert piece of .005 kapton between splices.

Technician(s) _____ Date 4-21-04

5.7 Put splices together and insulate splice area with ¾ overlap, .002 x 3/8 wide kapton, part no. (292722).

Technician(s) _____ Date 4-21-04

5.8 Attach Q1 Bus Exit Support Part Numbers to Q1 Lead as per Q1 Module Assembly (ME-369894).

Technician(s) _____ Date 4-21-04

5.9 Prepare Q1 Instrumentation wire feed thru. Build per Q1 Module Assembly Instrumentation Wire Feedthru (ME-430008). Wire Labels and descriptions are shown in Table 5.18 and per (MB-369998).

Note(s):

USE ONLY CERN LABELS ON WIRES.

Q1 Instrumentation wire feed thru labels				
	Fermilab Label	CERN Label		Description
1	W1aQ1	EH8311+	Twist Together	Q1 Cryogenic Heater Lead "1", lead end heater (a)
2	W2aQ1	EH8311-		Q1 Cryogenic Heater Lead "2", lead end heater (a)
3	TaQ1_I+	TT8311 I+	Pre-made cable	Q1 RTD, primary Wire color: Yellow
	TaQ1_I-	TT8311 I-		Q1 RTD, primary Wire color: Green
	TaQ1_V+	TT8311 U+		Q1 RTD, primary Wire color: Black
	TaQ1_V-	TT8311 U-		Q1 RTD, primary Wire color: Red
4	TbQ1_I+	TT8321 I+	Pre-made cable	Q1 RTD, redundant: Wire color: Yellow
	TbQ1_I-	TT8321 I-		Q1 RTD, redundant: Wire color: Green
	TbQ1_V+	TT8321 U+		Q1 RTD, redundant: Wire color: Black
	TbQ1_V-	TT8321 U-		Q1 RTD, redundant: Wire color: Red

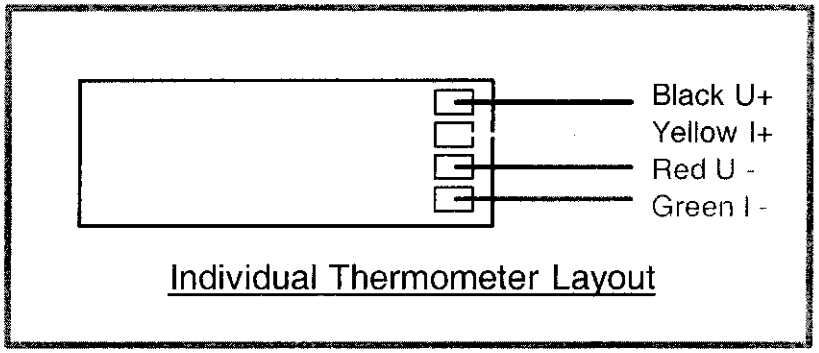

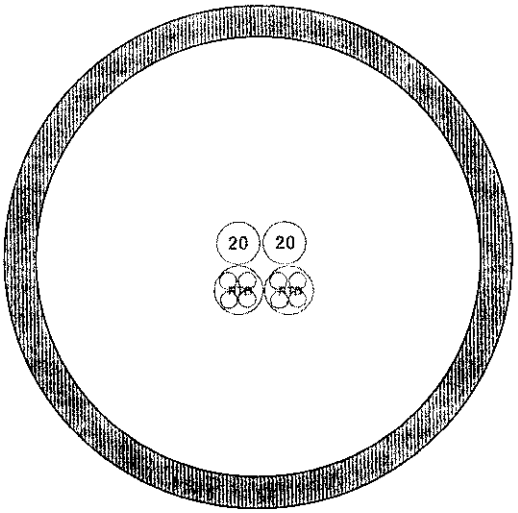

End View of Instrumentation Tube

Table 5.9

5.10 Slide Instrumentation Bus Assembly (ME-430008) into the proper Q1 Port as per Q1 Module Assembly (ME-369894). Verify that there is sufficient slack in cable to allow for two inches of differential thermal contraction.

Technician(s) _____ Date 4/21/04

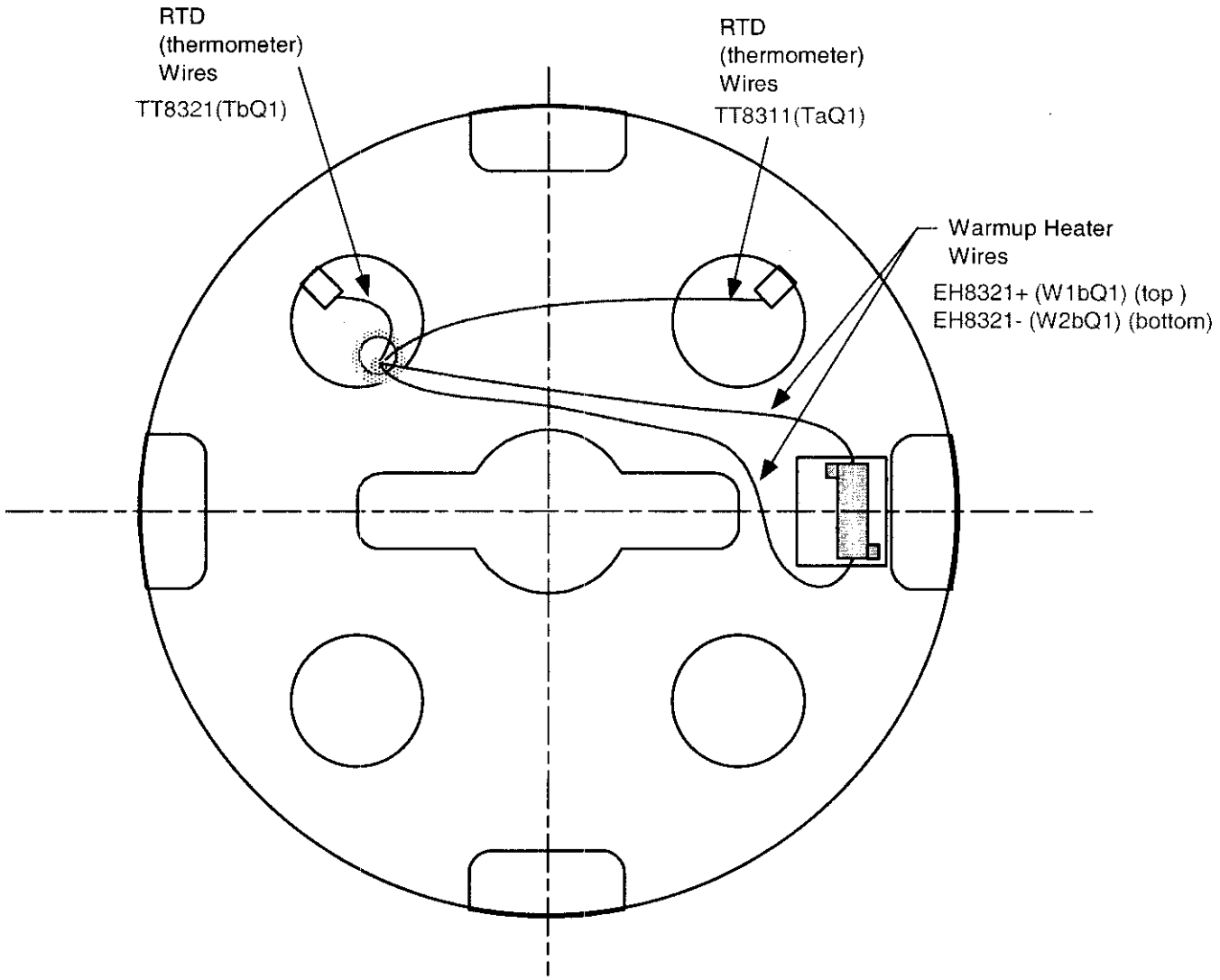

Looking at Non-lead End of Q1

Figure 5.10-A

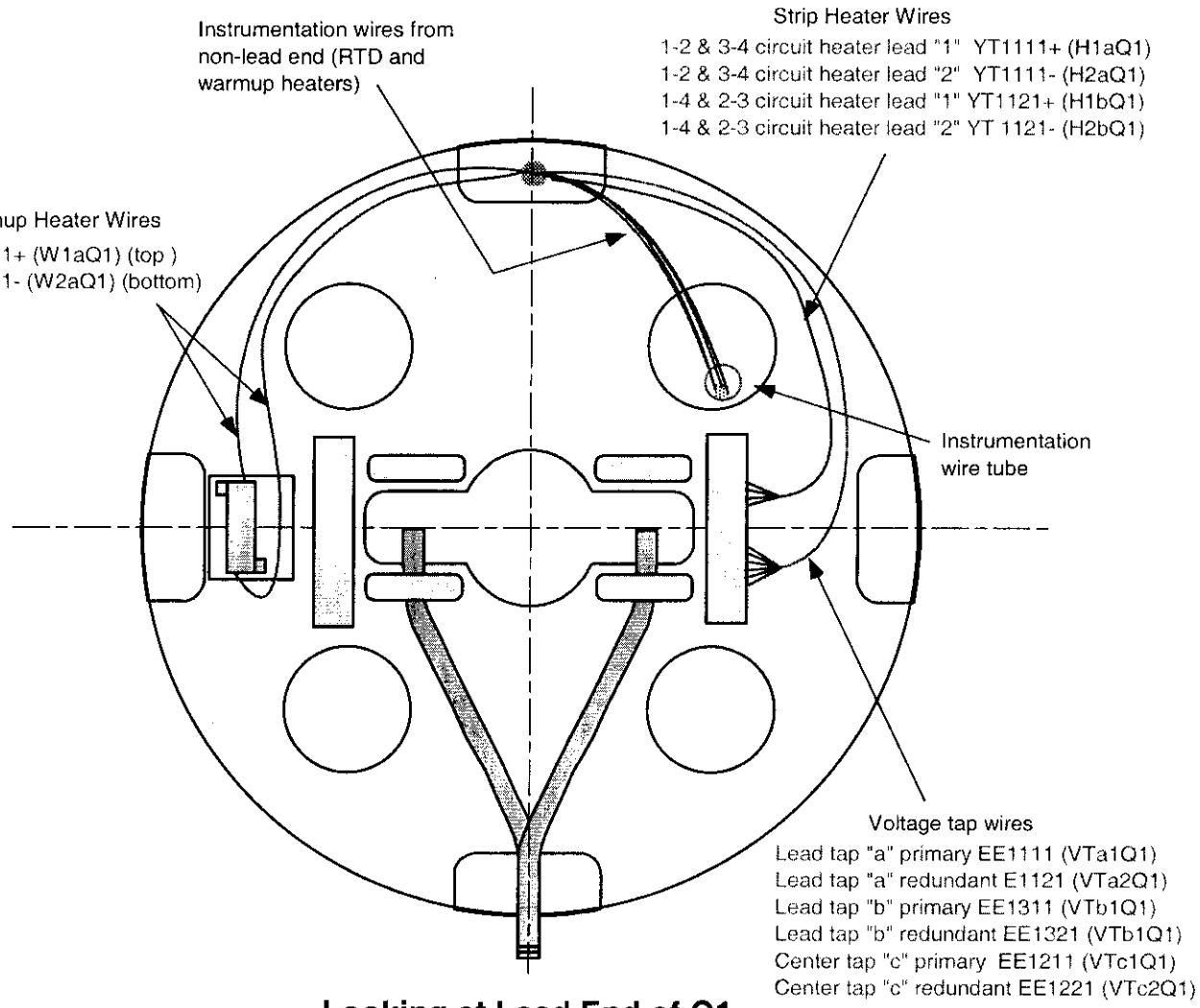

Looking at Lead End of Q1

Figure 5.10-B

5.11 Weld Warm-up Heater Base Plates (MA-360007) and RTD Mount Blocks to End Plates as per Q1 Module Assembly (ME-369894).

Jeff Roberts — 4-20-04
Welder(s) — Date

5.12 Install Warm-up Heaters (ME-369834) to each end of Q1 as per Q1 Module Assembly (ME-369894).

5.12.1 Install Warm-up Heaters (MA-369834) onto the Warm-up Heater Base Plate (MA-369997).

5.12.2 Solder wires (MA-369833) to the Warm-up Heaters as per (ME-369894).

Technician(s) — 4/21/04
Date

5.13 Install RTD's as per Q1 Module Assembly (ME-369894). Record Serial Numbers of each RTD in the table below. Attach Data Sheet for each RTD to traveler.

5.13.1 Attach RTD's (MA-369835) (Qty. 2) to Mounting Blocks as per Q1 Module Assembly (ME-369894).

5.13.2 Solder wires (MA-369836) to RTD's as per Q1 Module Assembly (ME-369894). Individual RTD wiring is shown in Figure 5.21.2-A below.

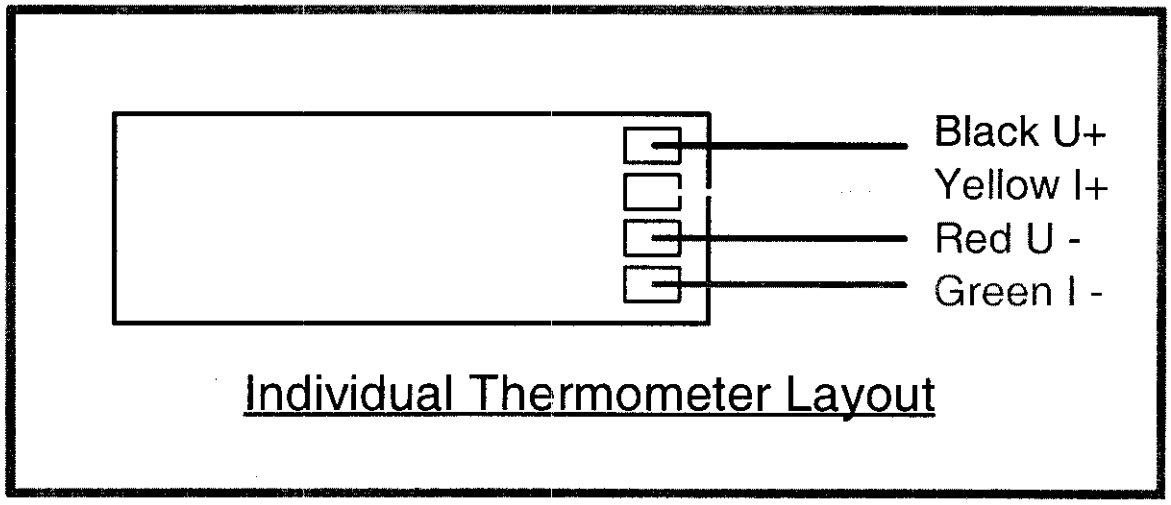

Figure 5.13.2-A

Technician(s) — 4/21/04
Date

5.14 Perform a continuity check on all RTD's and Warm-Up Heaters. Record the Data below. (1mA). Record the resistance data from the Manufacturer's Traveler below. Compare RTD resistance test results to the resistance results from the Manufacturer's Traveler. Ensure RTD resistances are within **5Ω**. Attach the Manufacturer's RTD papers at the end of this traveler.

To measure the resistance of a Thermometer (RTD):

1. Use Hewlett Packard HP3457A digital multimeter.
2. Record temperature of building within +/- 5 degrees.
3. Press line button to turn line on.
4. Connect wires as shown in Figure below.
5. Push blue button (function key) once.
6. Push OHMF button.
7. Verify arrow in readout is above the 4WΩ (meaning a 4 wire resistance measurement).
8. Read resistance in ohms and record in traveler.

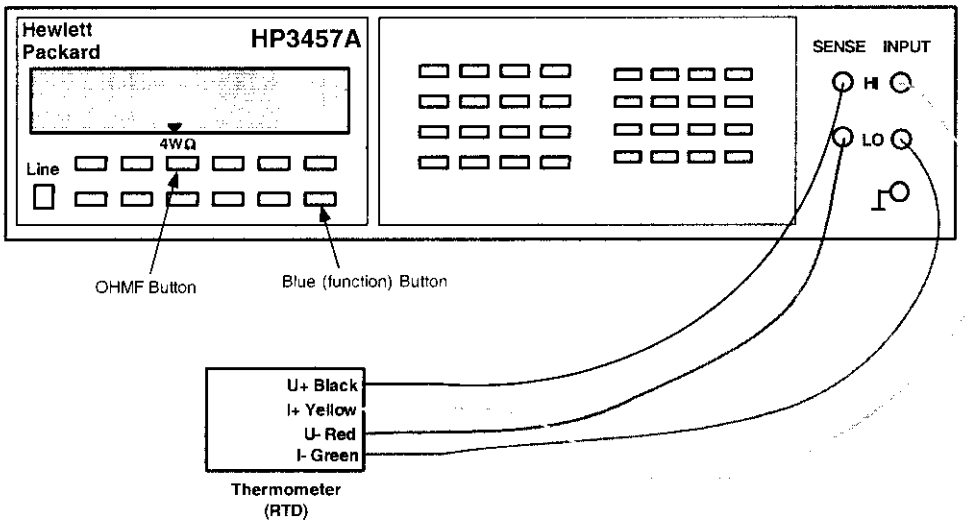

RTD'S				
Building Temperature: 70°F			Time of Test: 3:45 pm	
Serial No.	Location	Wire No.	Measured Ω	Manufacturer Ω Exp
CX-LS-X16752	NLE, INST. TUBE SIDE	TT8321	62.22	60,601
CX-LS-X16749	NLE, NON INST. TUBE SIDE	TT8311	66.55	64,888

Warm-up Heaters			
Building Temperature: 70°F		Time of Test: 4:00pm	
Location	Wire No	Measured Ω	Manufacturer Ω
Q1 Lead End	EH9311	16.255	16 Ω
Q1 Non-Lead End	EH9321	16.599	16 Ω

Technician(s)

4-21-07
Date

5.15 Hipot RTD's to 100V. Use Droege Serial No. 910 (FNAL Part No. 51330) or equivalent.

STOP

Have Crew Chief verify setup and sign below before continuing.

Crew Chief _____ Date 4-21-04

RTD'S				
Building Temperature: 70°F			**Time of Test:** _____	
Serial No.	**Location**	**Wire No.**	**Hipot Leakage < 1 μA**	**Manufacturer Leakage**
CX-LS-X16752	NLE, INSTR. TUBE SIDE	TT8321	< .01 μA	
CX-LS-X16749	NRE NON INSTR. TUBE SIDE	TT8311	< .01 μA	

Hipot Cryogenic (Warm-up) Heaters to 300V. Use Droege Serial No. 910 (FNAL Part No. 51330) or equivalent.

STOP

Have Crew Chief verify setup and sign below before continuing.

Crew Chief _____ Date 4-21-04

Warm-up Heaters			
Building Temperature: 70°		**Time of Test:** _____	
Location	**Wire No**	**Hipot Leakage < 1 μA**	**Manufacturer Leakage**
Q1 Lead End	EH8311	< .01 μA	
Q1 Non-Lead End	EH9321	< .01 μA	

Technician(s) _____ Date 4-21-07

5.16 Attach Linear Cable Clamp Assembly (ME-430040) to bottom of corrector Magnet.

Technician(s) _____ Date 4-21-04

5.17 Place the MCBX Correction Coil (MD-390312) in the Corrector Magnet Mounting Tooling.

Technician(s) _____ Date _____

5.18 Attach the MCBX Corrector Magnet Alignment Tooling (ME-390390) to the MCBX Corrector Magnet (MD-390312). Align the Scribe Lines on the Corrector Magnet (MD-390312) with those on the tooling.

Technician(s) _____ Date _____

TRR# 1612

5.19 Mount the Mini Level to the top of the MCBX Corrector Magnet Alignment Tooling.

Note(s):

Mini Level should be "zeroed" at reference stand location before this operation.

Technician(s) _____ Date _____

5.20 Rotate the MCBX Correction Coil (MD-390312) such that the Mini Level is Horizontal 0.00 mm/m (+/- 0.05 mm/m).

Technician(s) _____ Date _____

TRR Welded → 5.21 Move the MCBX Correction Coil (MD-390312) up against the Mounting Ring on the Q1 Magnet, and bolt the MCBX Correction Coil (MD-390312) to the Q1 Cold Mass using the Silver Plated Mounting Screw (MA-390247) and torque bolts to 500 in-lbs. per Note 4 of Q1 Cold Mass Welded Assembly (ME-390526). Shim between the Corrector and Flange as necessary.

500 → 550
Drawing Rev D, says 500 in lbs.

Technician(s) _____ Date 4/23/04

TRR# 1612 XXX 5.22 Verify Alignment of MCBX Correction Coil (MD-390312) as per Q1 Cold Mass Welded Assembly (ME-390526).

Responsible Authority/Physicist _____ Date 4/23/04

5.23 Tack weld bolts and washers for mounting Corrector into place per Q1 Cold Mass Welded Assembly (ME-390526).

Weldor(s) _____ Date 4/23/04

5.24 Mount the Stabilizer Assembly (ME-430039) onto the top of correction coil as shown in Q1 Module Assembly (ME-369894).

Technician(s) _____ Date 4-23-04

5.25 Feed the Lead End Loop Assembly (ME-369962) through the Stabilizer Assembly as shown in Q1 Module Assembly (ME-369894). The Top of the Bus as it exits the Magnet should face toward the Cold Mass at the stabilizer assembly.

Technician(s) _____ Date 4-23-04

5.26 Feed the Lead End Loop Assembly (ME-369962) through the Linear Cable Clamp Assembly (ME-430040)(bottom). Bus surface facing Cold Mass at stabilizer assembly should be at top as it exits the linear cable clamp assembly.

Technician(s) _____ Date 4-23-04

5.27 Verify that Top Surface of the Bus as it exits the Magnet is also at the top as it exits the Linear Cable Clamp Assembly.

Crew Chief _____ Date 4/23/04

TRR# 1612 →

5.28 Attach the Backing Spline (MD-430053) to the Expansion Loop, between the Stabilizer Assembly and the Linear Cable Clamp Assembly, as shown on Q1 Module Assembly (ME-369894).

Technician(s) _____ Date 4-23-04

5.29 Wrap Glass Tape and Kevlar String on the area between the magnet and the Linear Cable Clamp Assembly.

Technician(s) _____ Date 4-24-04

5.30 Attach Face Plate for Corrector Leads (MD-390671) to front surface of Correction Coil.

Technician(s) _____ Date 4/22/04

5.31 Connect the MCBX Correction Coil (MD-390312) Bus wires from Bus Assembly (ME-369826) to the MCBX Correction Coil (MD-390312) as per Q1 Module Assembly (ME-369894).

Technician(s) _____ Date 4-24-04

5.32 Solder MCBX Corrector Magnet Voltage Tap Wires (MA-369832) as per Q1 Module Assembly (ME-369894).

Technician(s) _____ Date 4-24-04

5.33 Run instrumentation wire bundle along path at top of corrector coil as shown in Q1 Module Assembly (ME-369894). Attach Instrumentation Wire Hold-Down Brackets (ME-430015) as shown in Q1 Module Assembly (ME-369894) and pack with Green Putty.

Technician(s) _____ Date 4-26-04

5.34 Attach Q1 Lead End Spider Assembly (MD-430042) to Expansion Loop Assembly (MB-369962) and Corrector Coil Bus as shown in Q1 Module Assembly (ME-369894).

Technician(s) _____ Date 4-26-04

5.35 Attach Backing Spline (MD-430053) to area between Linear Cable Clamp Assembly and Lead End Spider Assembly (MD-430042).

Technician(s) _____ Date 4-26-04

5.36 Wrap Glass Tape and Kevlar String on the area between the Linear Cable Clamp Assembly and the Lead End Spider Assembly (MD-430042).

Technician(s) _____ Date 4/26/04

6.0 Electrical Inspection

6.1 Perform an electrical inspection on each of the Individual Quadrants and the Cold Mass. Refer to the Valhalla and Leader Free Standing Coil Measurement Procedure (ES-292306).

To measure the Resistance of a Q1 Cold Mass:

1. Use Valhalla Scientific 4300B digital micro-ohmmeter.
2. Set Test Current to 1 amp.
3. Set Scale to 2V full scale.
4. Turn temperature compensation on.
5. Turn test current off.
6. Connect I_{HI} to Q4 inner power lead as shown in figure.
7. Connect I_{LO} to Q3 inner power lead as shown in figure.
8. Turn test current on.
9. Connect V_{HI} and V_{LO} to voltage taps as shown in resistance table.
10. To measure Total with leads, connect V_{HI} to Q4 power lead and V_{LO} to Q3 power lead.
11. Read resistance and record in traveler.

Q1 Cold Mass Electrical Measurements

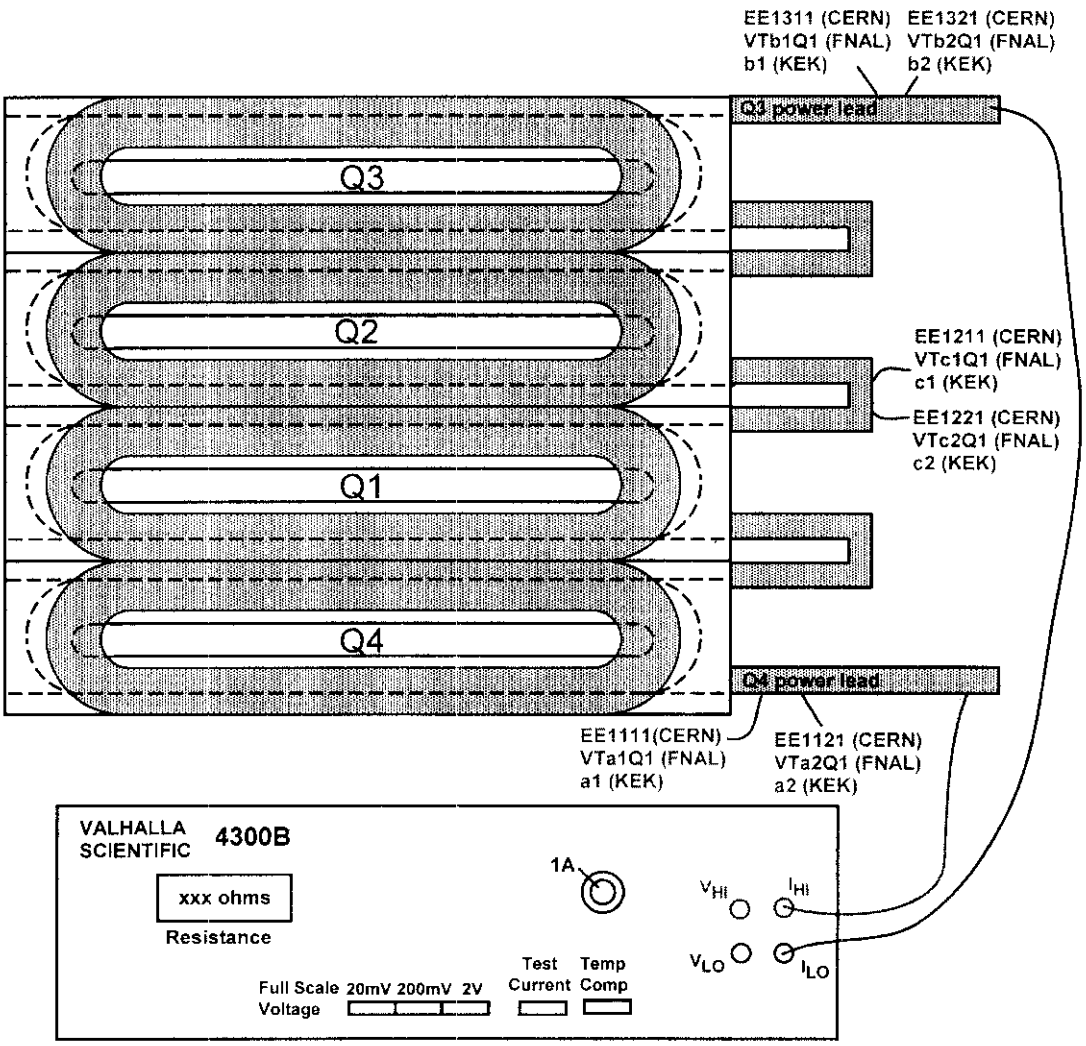

(Q1) Resistance				Nominal to Ω
Voltage Tap Serial Numbers				Total Resistance
Connect	Fermi	CERN	KEK	
V_{HI}	VTa1Q1	EE1111	a1	3.41 Ω
V_{LO}	VTc1Q1	EE1211	c1	
V_{HI}	VTc1Q1	EE1211	c1	3.41 Ω
V_{LO}	VTb1Q1	EE1311	b1	
V_{HI}	VTa1Q1	EE1111	a1	6.819 Ω
V_{LO}	VTb1Q1	EE1311	b1	
				Total Resistance with Leads
V_{HI}	Q4 Power Lead			6.823 Ω
V_{LO}	Q3 Power Lead			

Technician(s) 4-27-04 Date

Check resistance of Redundant Voltage Taps.

Q1 Redundant Voltage Taps				
Connect	Fermi	CERN	KEK	Resistance
V_{HI}	VTa2Q1	EE1121	a2	3.41 Ω
V_{LO}	VTc2Q1	EE1221	c2	
V_{HI}	VTc2Q1	EE1221	c2	3.41 Ω
V_{LO}	VTb2Q1	EE1321	b2	

Technician(s) 4-29-04 Date

To measure Ls and Q of a Q1 Cold Mass:

1. Use Hewlett Packard HP4284A digital LCR meter.
2. Turn line switch to on. The words "Measurement Display" should now be highlighted in the upper left corner of the display screen.
3. Use cursor buttons (shown in figure with arrows) to toggle down until "function" is highlighted near the upper left corner of the display screen.
4. Push the lowest of the five buttons to the right of display 3 times. (this button is shaded gray in the figure) The line in the display screen next to the second button down should now read "Ls-Q" and "function" near the upper left corner of the display should have the option "Ls-Q" chosen.
5. Scroll to "integer" using the cursor buttons. "Integer" will have the option "medium" chosen.
6. Press the 3rd button of five. The word "medium" should change to "long".
7. Connect H_{cur} to Q4 power lead as shown in figure.
8. Connect L_{cur} to Q3 power lead as shown in figure.
9. Connect H_{pot} and L_{pot} to voltage taps as shown in table.
10. Read Ls and Q from display and record in traveler.

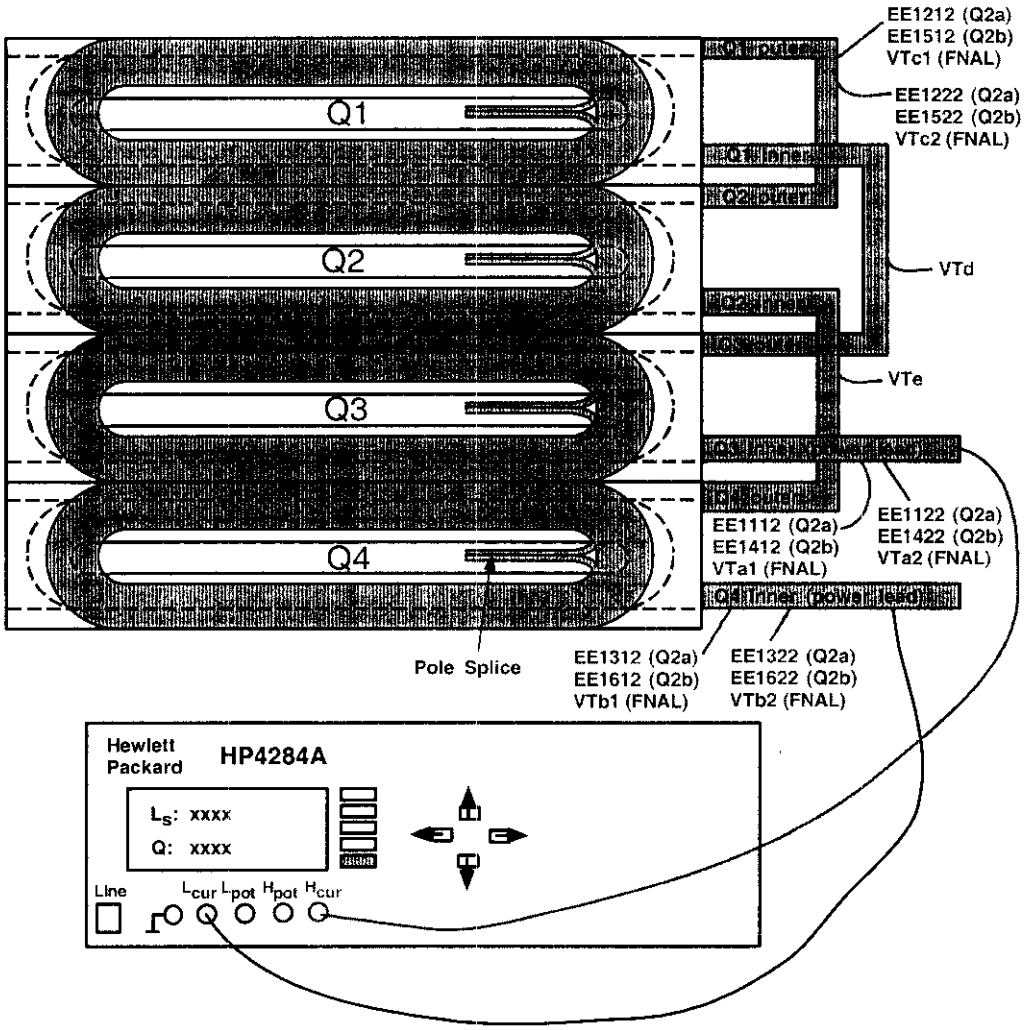

(Q1) Inductance				Nominal ~ to mH	
Voltage Tap Serial Numbers				Total Inductance	
Connect	Fermi	CERN	KEK		
H_{POT}	VTa1Q1	EE1111	a1		15.626 mH
L_{POT}	VTc1Q1	EE1211	c1		
H_{POT}	VTc1Q1	EE1211	c1		15.638 mH
L_{POT}	VTb1Q1	EE1311	b1		
H_{POT}	VTa1Q1	EE1111	a1		31.254 H
L_{POT}	VTb1Q1	EE1311	b1		

(Q1) Q-Factor				Nominal ~ to	
Voltage Tap Serial Numbers				Total Q	
Connect	Fermi	CERN	KEK		
H_{POT}	VTa1Q1	EE1111	a1		1.2
L_{POT}	VTc1Q1	EE1211	c1		
H_{POT}	VTc1Q1	EE1211	c1		1.2
L_{POT}	VTb1Q1	EE1311	b1		
H_{POT}	VTa1Q1	EE1111	a1		1.2
L_{POT}	VTb1Q1	EE1311	b1		

Technician(s)

4-27-04
Date

To measure the resistance of a Thermometer (RTD):

1. Use Hewlett Packard HP3457A digital multimeter.
2. Record temperature of building within +/- 5 degrees.
3. Press line button to turn line on.
4. Connect wires as shown in Figure below.
   U+ (Black) to Sense HI
   I+ (Yellow) to Input HI
   U- (Red) to Sense LO
   I- (Green) to Input LO
5. Push blue button (function key) once.
6. Push OHMF button.
7. Verify arrow in readout is above the 4WΩ (meaning a 4 wire resistance measurement).
8. Read resistance in ohms and record in traveler.

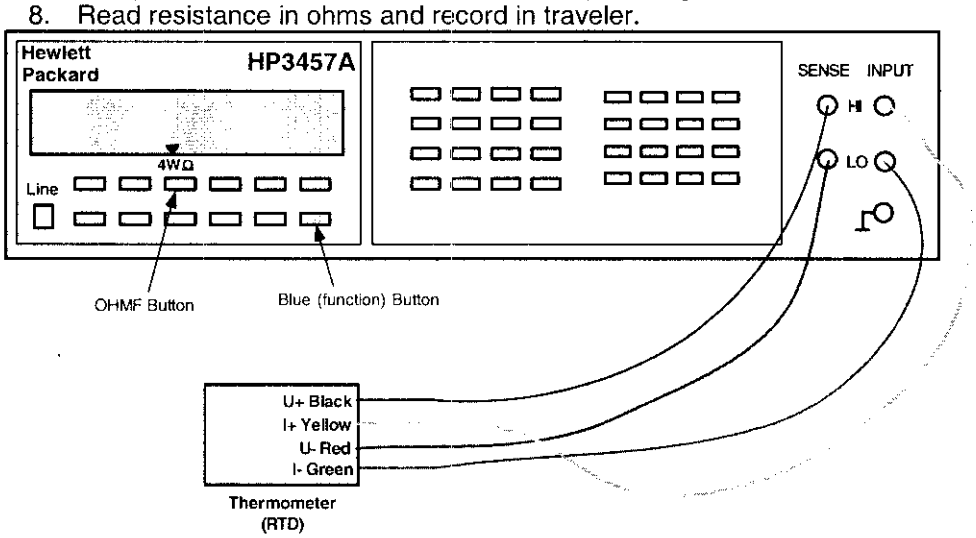

To measure the resistance of a Cryogenic (Warm-up) Heater

1. Use Hewlett Packard HP3457A digital multimeter.
2. Record temperature of building within +/- 5 degrees.
3. Press line button to turn line on.
4. Connect wires as shown in Figure below.
5. Push blue button (function key) once.
6. Push OHMF button.
7. Verify arrow in readout is above the 4WΩ (meaning a 4 wire resistance measurement).
   Note: Although this is technically a 4 wire measurement, it is effectively a 2 wire measurement, since there are only 2 wires connected to each heater.
8. Read resistance in ohms and record in traveler.

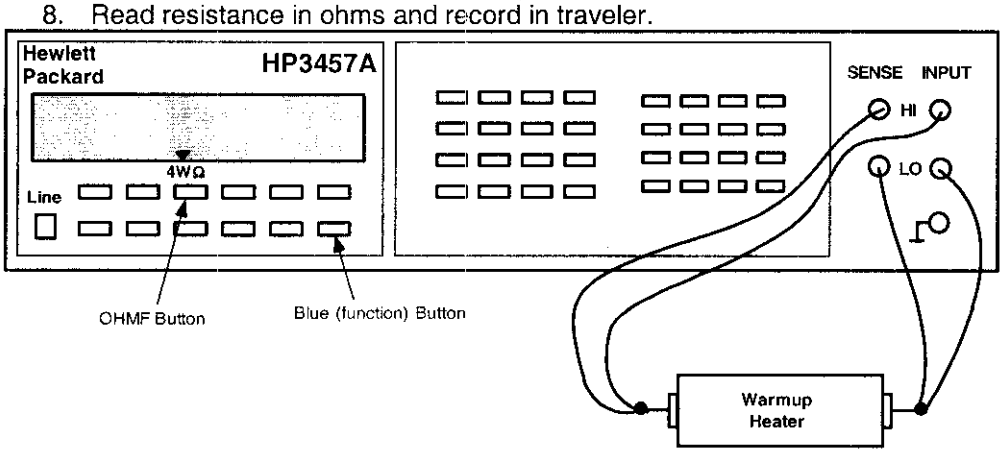

Q1 - RTD's and Cryogenic (warm-up) Heaters			
Temperature of Building (± 5°): 70			
Component	**Fermi**	**CERN**	**Resistance**
Q1 RTD, primary	TaQ1	TT8311	60.533 Ω
Q1 RTD, redundant	TbQ1	TT8321	62.198 Ω
Q1 Cryogenic (warm-up) Heater (LE) - wire at top (CERN #1 I+)	W1aQ1	EH8311+	16.690 Ω
Q1 Cryogenic (warm-up) Heater (LE) - wire at bottom (CERN #1 I-)	W2aQ1	EH8311-	
Q1 Cryogenic (warm-up) Heater (Non-LE) - wire at top (CERN #2 I+)	W1bQ1	EH8321+	15.427 Ω
Q1 Cryogenic (warm-up) Heater (Non-LE) - wire at bottom (CERN #2 I-)	W2bQ1	EH8321-	

Technician(s) 4-27-04 Date

Using the Hewlett Packard HP3457A digital multimeter, measure the Protection (Strip) Heater Resistance for Q1.

Q1 Protection (Strip) Heater Resistance					
Fermi	**CERN**	**KEK**	**Description**	**Limit**	**Resistance**
H1aQ1	**YT1111+**	**HA1**	**Circuit A**	~~30.612 Ω~~	30.612 Ω
H2aQ1	**YT1111-**	**HA2**			
H1bQ1	**YT1121+**	**HB1**	**Circuit B**	Ω	30.596 Ω
H2bQ1	**YT1121-**	**HB2**			

Technician(s) 4-27-04 Date

6.2 Using the HP4284A, connect power thru the corrector Power Leads (HA1 and HB1 to measure Q1-H1 or VA1 and VB1 to measure Q1-V1). Connect the Sense Leads as shown in table below and record resistance.

MCBX Corrector Coil Taps			
Component	**FermiLab Label**	**CERN Label**	**Resistance**
Q1-H1	**VTH1**	**EE8121**	.025 Ω
	HA1	**N/A**	
Q1-V1	**VTV1**	**EE8111**	.013 Ω
	VA1	**N/A**	

Technician(s) Date 4-27-04

7.0 Dome Setup

7.1 Attach IP End Dome (MD-390172) (Q1) to the End Dome Positioning Fixture (MD-369776).

Technician(s) _____ Date 4-27-04

7.2 Align IP End Dome (MD-390172) as shown in Q1 Cold Mass Welded Assembly (ME-390526).

Technician(s) _____ Date 4-27-04

7.3 Level the IP End Dome (MD-390172) using the Ball Socket (MD-369777) and the Mini Level.

Technician(s) _____ Date 4-27-04

7.4 Mark the IP End Dome (MD-390172) and the End Plate with a Horizontal Witness Line. This Step will be used in Step 9.4 to reposition the Domes prior to Welding.

Technician(s) _____ Date 4-27-04

7.5 Remove the IP End Dome (MD-390172) from the Tooling.

Technician(s) _____ Date 4-27-04

7.6 Attach Non-IP End Dome (MD-390172) (Q1) to the End Dome Positioning Fixture (MD-369776).

Technician(s) _____ Date 4/27/04

7.7 Align Non-IP End Dome (MD-390172) as shown in Q1 Cold Mass Welded Assembly (ME-390526)

Technician(s) _____ Date 4-27-04

7.8 Level the Non-IP End Dome (MD-390172) using the Ball Socket (MD-369777) and the Mini Level.

Technician(s) _____ Date 4-27-04

~~FEED WIRES AFTER~~ ~~Dome?~~

7.9 Feed the Electrical wires/bus through the proper ports as the Non-IP End Dome (MD-390172) is brought into position against the End Plate.

Technician(s) _____ Date 4/27/04

7.10 Mark the Non-IP End Dome (MD-390172) and the End Plate with a Horizontal Witness Line. This Step will be used in Step 9.7 to reposition the Domes prior to Welding.

Technician(s) _____ Date 4/27/04

7.11 Remove the Non-IP End Dome (MD-390172) from the Tooling.

Technician(s) _____ Date 4/27/04

TRR# 1612

8.0 Beam Tube Insertion

8.1 Inspect the Beam Tube (MD-369955) for damage. Clean Beam Tube using lint free Heavy Duty Wipers (Fermi stock 1660-0150) and Isopropyl Alcohol (Fermi stock 1920-0300) as per Insulated Beam Tube Assembly for Q1 (MD-369746).

Technician(s) _____ Date 4-27-04

TRR# 1612 XXX 8.2 Verify Alignment of Q1 and Corrector Magnet (MD-390312) as per Q1 Cold Mass Welded Assembly (ME-390526).

Responsible Authority/Physicist _____ Date _____

8.3 Using Insertion Tooling, insert the Beam Tube (MD-369955) into the Magnet Assembly as per Beam Tube Insertion Tooling (MD-369789).

Technician(s) _____ Date 4-27-04

8.4 Position the Beam Tube (MD-369955) longitudinally per Q1 Cold Mass Welded Assembly (ME-390526).

Technician(s) _____ Date 4-27-04

8.5 Measure the Beam Tube length and record this measurement below.

8.5.1 Beam Tube Length: 6410

8.5.2 Subtract 7725 mm (± 2mm) from the Beam Tube Length, and record here: 695

8.5.3 Divide the Number recorded in step 8.5.2 by 2 and record here: 347.1

Note(s):

You will also need to record this number at Steps 8.6 & 8.9

The measurement recorded in step 8.5.3 is the amount to be cut off from each end.

Technician(s) _____ Date 4-28-04

8.6 Measure from one end of the Beam Tube and place a mark at the distance from step 8.5.3.

Amount to be cut off from the end. (Number recorded in Step 8.5.3)
347.1

Technician(s) _____ Date 4/28/04

8.7 Verify the placement of the Mark, measured in Step 8.6 is correct.

Crew Chief _____ Date 4-28-04

8.8 Using the Wachs Cutter, cut the Beam Tube at the Mark from Step 8.6.

Technician(s) _____ Date 4-28-04

8.9 Measure from one end of the Beam Tube and place a mark at the distance from step 8.5.3.

Amount to be cut off from the end. (Number recorded in Step 8.5.3)
347.1

Technician(s) _____ Date 4/28/04

8.10 Verify the placement of the Mark, measured in Step 8.9 is correct. Measuring from the End Plate, this mark should be equal to the 'End Plate to Beam Tube' distance at the other end.

Crew Chief — Date: 4-28-04

8.11 Using the Wachs Cutter, cut the Beam Tube at the Mark from Step 8.9.

Technician(s) — Date: 4-28-04

XXX 8.12 Hipot the Beam Tube to coil, heaters and ground. (5kV) (Max. Leakage < 0.5μA)

STOP

Have Crew Chief verify setup and sign below before continuing.

Crew Chief — Date: 4/28/04

Hipot	Leakage or Failure Voltage	Pass	Fail
Beam Tube to coil, heaters and ground	.95 μA	X	

Technician(s) — Date: 4-28-04

Responsible Authority/Physicist — Date: 4-28-04

9.0 Dome Installation

X 9.1 Tack weld the corrector mounting hardware in place as per Q1 Cold Mass Welded Assembly (ME-390526).

Chander Sood — 4-28-04
Weldor(s) — Date

9.2 Mount and adjust the Shipping restraint screws.

Note(s):
Weld to corrector if necessary.

Technician(s) — 4-28-04
Date

9.4 Reposition the IP End Dome as shown in Q1 Cold Mass Welded Assembly (ME-390526) using the Horizontal Witness Line from step 7.4.

Technician(s) — 4-28-04
Date

9.5 Tack weld the IP End Dome in place at approximately 6-8 places around the Dome per Q1 Cold Mass Welded Assembly (ME-390526).

William Gaffield — 4-28-04
Weldor(s) — Date

9.6 Weld the IP End Dome, skip weld around to minimize distortion per Q1 Cold Mass Welded Assembly (ME-390526).

William Gaffield — 4-28-04
Weldor(s) — Date

9.7 Reposition the Non-IP End Dome as shown in Q1 Cold Mass Welded Assembly (ME-390526) using the Horizontal Witness Line from step 7.10.

Technician(s) — 4-28-04
Date

9.8 Feed the Electrical wires/Bus through the proper ports as the Non-IP End Dome is brought into position against the End Plate.

Technician(s) — 4-28-04
Date

9.9 Ensure Spider Assemby (MC-369973) is installed properly as per Q1 Module Assembly (ME-369894).

Crew Chief _____ Date 4/28/04

9.10 Tack weld the Non-IP End Dome in place at approximately 6-8 places around the Dome as per Q1 Cold Mass Welded Assembly (ME-390526).

Weldor(s) _____ Date 4-28-04

9.11 Weld the Non-IP End Dome, skip weld around to minimize distortion as per Q1 Cold Mass Welded Assembly (ME-390526).

Weldor(s) _____ Date 4-28-04

10.0 Cold Bore

10.1 Flare both ends of the Beam Tube using Flaring Tool (MC-390416) per Q1 Cold Mass Welded Assembly (ME-390526).

Technician(s) _____ Date 6/3/04

10.2 Add Spacer between Beam Tube Flange and IP End Dome, if necessary.

Spacer Added? Yes ☒ No ☐

Technician(s) _____ Date 6/3/04

10.3 Position Cold Bore Flange (MC-390538) over the Beam Tube and onto IP End Dome per Q1 Cold Mass Welded Assembly (ME-390526).

Technician(s) _____ Date 6/3/04

10.4 Weld the Beam Tube to the Flange at IP End as per Q1 Cold Mass Welded Assembly (ME-390526).

Weldor(s) _____ Date 6/3/04

10.5 Position the Cold Bore Flange (MC-390538) over the Beam Tube and onto the Non-IP End Dome (Q1) per Q1 Cold Mass Welded Assembly (ME-390526).

Technician(s) _____ Date 6/3/04

10.6 Weld Beam Tube to Flange at NON-IP End as per Q1 Cold Mass Welded Assembly (ME-390526).

Weldor(s) _____ Date 6/3/04

TRR# 1612 →

10.7 Align Beam Tube and the Flange at IP End per Q1 Cold Mass Welded Assembly (ME-390526).

Technician(s) Date 6/3-04

10.8 Weld the Flange to the IP End Dome as per Q1 Cold Mass Welded Assembly (ME-390526).

Weldor(s) Date 6/3/04

10.9 Align Beam Tube and Flange at NON-IP End per Q1 Cold Mass Welded Assembly (ME-390526).

Technician(s) Date 6/3/04

10.10 Weld the Flange to the Non-IP End Dome as per Q1 Cold Mass Welded Assembly (ME-390526).

Weldor(s) Date 6/3/04

11.0 Electrical Inspection

11.1 Perform an electrical inspection on each of the Individual Quadrants and the Cold Mass. Refer to the Valhalla and Leader Free Standing Coil Measurement Procedure (ES-292306).

To measure the Resistance of a Q1 Cold Mass:

1. Use Valhalla Scientific 4300B digital micro-ohmmeter.
2. Set Test Current to 1 amp.
3. Set Scale to 2V full scale.
4. Turn temperature compensation on.
5. Turn test current off.
6. Connect I_{HI} to Q4 inner power lead as shown in figure.
7. Connect I_{LO} to Q3 inner power lead as shown in figure.
8. Turn test current on.
9. Connect V_{HI} and V_{LO} to voltage taps as shown in resistance table.
10. To measure Total with leads, connect V_{HI} to Q4 power lead and V_{LO} to Q3 power lead.
11. Read resistance and record in traveler.

Q1 Cold Mass Electrical Measurements

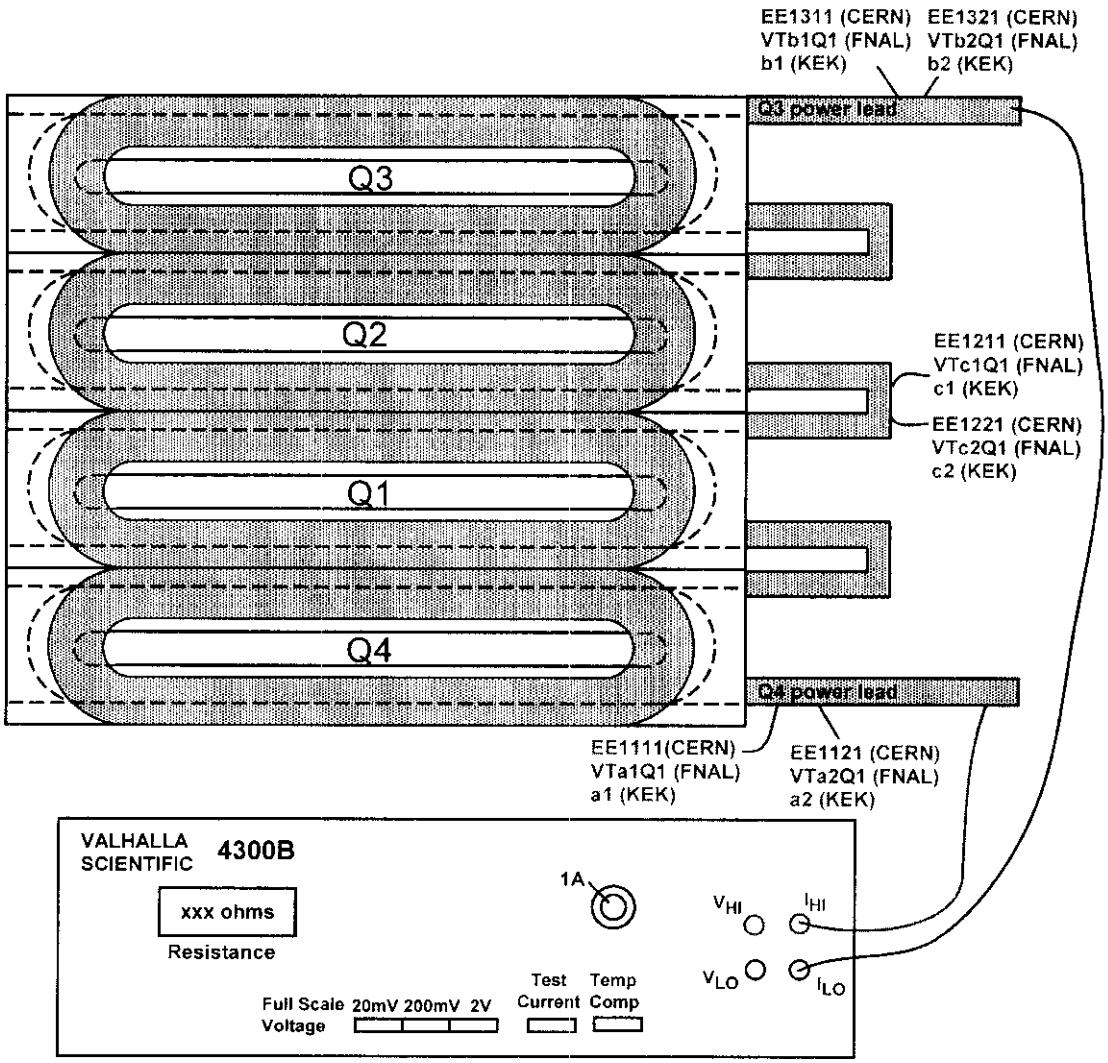

(Q1) Resistance				Nominal to Ω
Voltage Tap Serial Numbers				Total Resistance
Connect	Fermi	CERN	KEK	
V_{HI}	VTa1Q1	EE1111	a1	.3420 Ω
V_{LO}	VTc1Q1	EE1211	c1	
V_{HI}	VTc1Q1	EE1211	c1	.3421 Ω
V_{LO}	VTb1Q1	EE1311	b1	
V_{HI}	VTa1Q1	EE1111	a1	.6842 Ω
V_{LO}	VTb1Q1	EE1311	b1	
				Total Resistance with Leads
V_{HI}	Q4 Power Lead			.6846 Ω
V_{LO}	Q3 Power Lead			

Technician(s) Date 6-4-04

Check resistance of Redundant Voltage Taps.

Q1 Redundant Voltage Taps				
Connect	Fermi	CERN	KEK	Resistance
V_{HI}	VTa2Q1	EE1121	a2	.3421 Ω
V_{LO}	VTc2Q1	EE1221	c2	
V_{HI}	VTc2Q1	EE1221	c2	.3422 Ω
V_{LO}	VTb2Q1	EE1321	b2	

Technician(s) Date 6-4-04

To measure Ls and Q of a Q1 Cold Mass:

1. Use Hewlett Packard HP4284A digital LCR meter.
2. Turn line switch to on. The words "Measurement Display" should now be highlighted in the upper left corner of the display screen.
3. Use cursor buttons (shown in figure with arrows) to toggle down until "function" is highlighted near the upper left corner of the display screen.
4. Push the lowest of the five buttons to the right of display 3 times. (this button is shaded gray in the figure) The line in the display screen next to the second button down should now read "Ls-Q" and "function" near the upper left corner of the display should have the option "Ls-Q" chosen.
5. Scroll to "integer" using the cursor buttons. "Integer" will have the option "medium" chosen.
6. Press the 3rd button of five. The word "medium" should change to "long".
7. Connect H_{cur} to Q4 power lead as shown in figure.
8. Connect L_{cur} to Q3 power lead as shown in figure.
9. Connect H_{pot} and L_{pot} to voltage taps as shown in table.
10. Read Ls and Q from display and record in traveler.

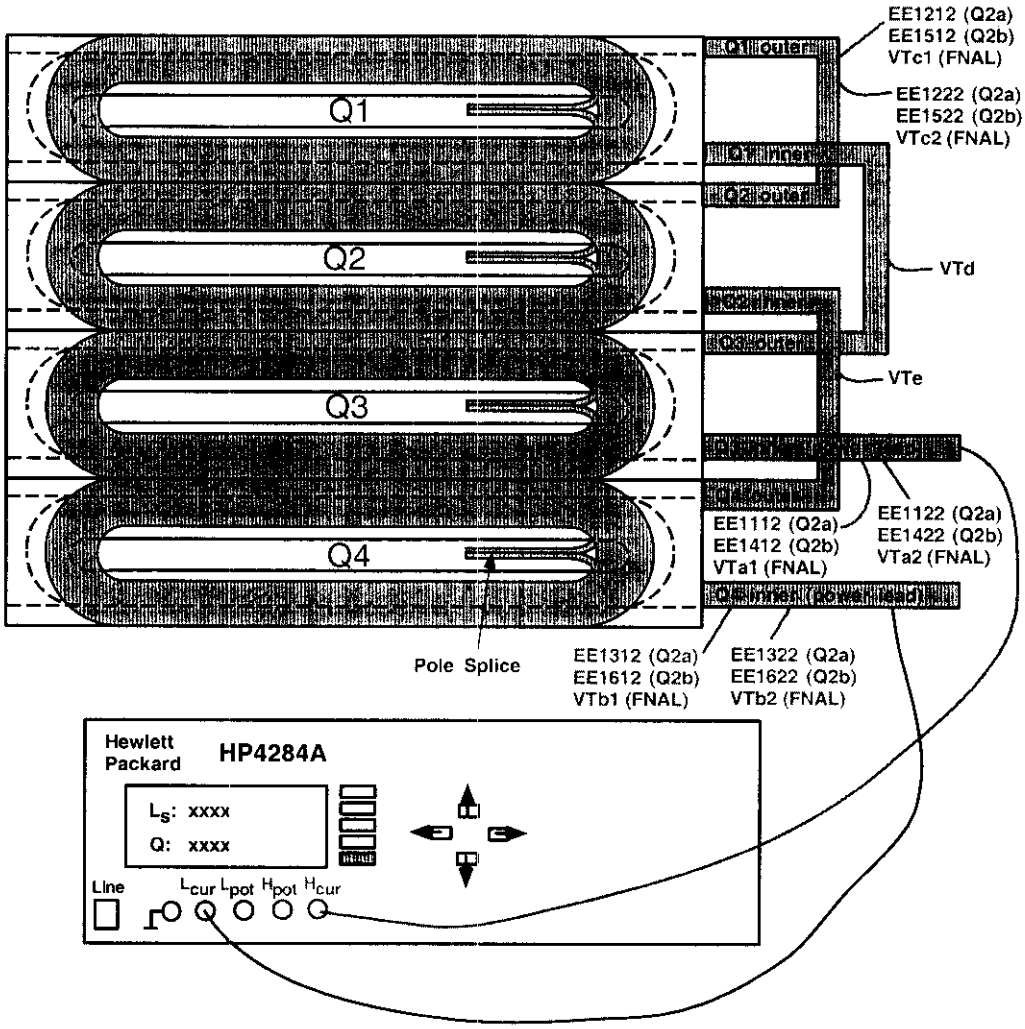

(Q1) Inductance				Nominal ~ to mH
Voltage Tap Serial Numbers				Total Inductance
Connect	Fermi	CERN	KEK	
H_{POT}	VTa1Q1	EE1111	a1	15.392 mH
L_{POT}	VTc1Q1	EE1211	c1	
H_{POT}	VTc1Q1	EE1211	c1	15.399 mH
L_{POT}	VTb1Q1	EE1311	b1	

H_{POT}	VTa1Q1	EE1111	a1	30.788 H
L_{POT}	VTb1Q1	EE1311	b1	

(Q1) Q-Factor				Nominal ~ to
Voltage Tap Serial Numbers				Total Q
Connect	Fermi	CERN	KEK	
H_{POT}	VTa1Q1	EE1111	a1	1.1
L_{POT}	VTc1Q1	EE1211	c1	
H_{POT}	VTc1Q1	EE1211	c1	1.1
L_{POT}	VTb1Q1	EE1311	b1	

H_{POT}	VTa1Q1	EE1111	a1	1.1
L_{POT}	VTb1Q1	EE1311	b1	

Technician(s)

6-4-04
Date

To measure the resistance of a Thermometer (RTD):

1. Use Hewlett Packard HP3457A digital multimeter.
2. Record temperature of building within +/- 5 degrees.
3. Press line button to turn line on.
4. Connect wires as shown in Figure below.
   U+ (Black) to Sense HI
   I+ (Yellow) to Input HI
   U- (Red) to Sense LO
   I- (Green) to Input LO
5. Push blue button (function key) once.
6. Push OHMF button.
7. Verify arrow in readout is above the 4WΩ (meaning a 4 wire resistance measurement).
8. Read resistance in ohms and record in traveler.

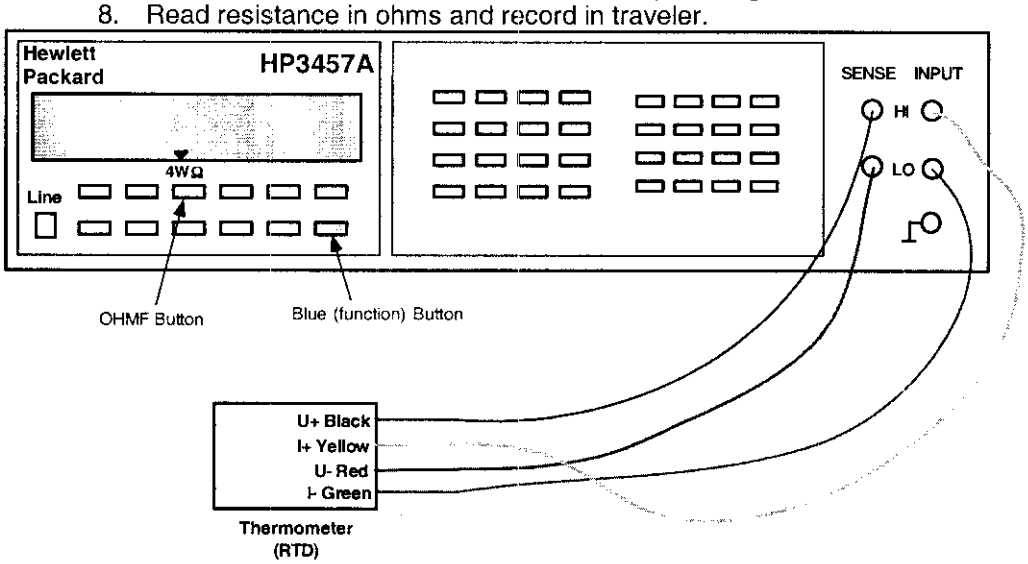

To measure the resistance of a Cryogenic (Warm-up) Heater

1. Use Hewlett Packard HP3457A digital multimeter.
2. Record temperature of building within +/- 5 degrees.
3. Press line button to turn line on.
4. Connect wires as shown in Figure below.
5. Push blue button (function key) once.
6. Push OHMF button.
7. Verify arrow in readout is above the 4WΩ (meaning a 4 wire resistance measurement).
   Note: Although this is technically a 4 wire measurement, it is effectively a 2 wire measurement, since there are only 2 wires connected to each heater.
8. Read resistance in ohms and record in traveler.

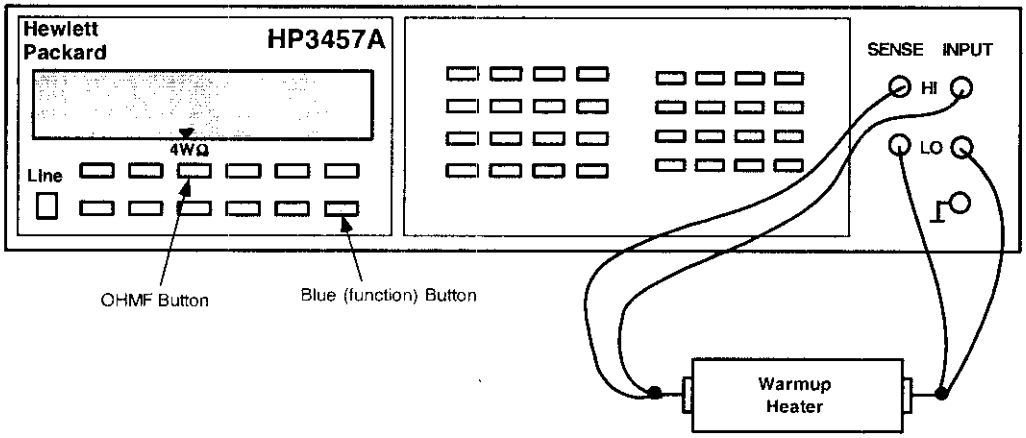

Q1 - RTD's and Cryogenic (warm-up) Heaters			
Temperature of Building (± 5°): 70°			
Component	Fermi	CERN	Resistance
Q1 RTD, primary	TaQ1	TT8311	62.182 Ω
Q1 RTD, redundant	TbQ1	TT8321	61.881 Ω
Q1 Cryogenic (warm-up) Heater (LE) - wire at top (CERN #1 I+)	W1aQ1	EH8311+	16.259 Ω
Q1 Cryogenic (warm-up) Heater (LE) - wire at bottom (CERN #1 I-)	W2aQ1	EH8311-	
Q1 Cryogenic (warm-up) Heater (Non-LE) - wire at top (CERN #2 I+)	W1bQ1	EH8321+	16.601 Ω
Q1 Cryogenic (warm-up) Heater (Non-LE) - wire at bottom (CERN #2 I-)	W2bQ1	EH8321-	

Technician(s) 6-9-04 Date

Using the Hewlett Packard HP3457A digital multimeter, measure the Protection (Strip) Heater Resistance for Q1.

Q1 Protection (Strip) Heater Resistance					
Fermi	CERN	KEK	Description	Limit	Resistance
H1aQ1	YT1111+	HA1	Circuit A	Ω	30.44 Ω
H2aQ1	YT1111-	HA2			
H1bQ1	YT1121+	HB1	Circuit B	Ω	30.43 Ω
H2bQ1	YT1121-	HB2			

Technician(s) 6-9-04 Date

11.2 Using the HP4284A, connect power thru the corrector Power Leads (HA1 and HB1 to measure Q1-H1 or VA1 and VB1 to measure Q1-V1). Connect the Sense Leads as shown in table below and record resistance.

MCBX Corrector Coil Taps			
Component	**FermiLab Label**	**CERN Label**	**Resistance**
Q1-H1	**VTH1**	**EE8121**	21.01 Ω
	HA1	**N/A**	
Q1-V1	**VTV1**	**EE8111**	18.89 Ω
	VA1	**N/A**	

Technician(s) Date 6-4-04

XXX 11.3 Hipot according to table below. Hipot to 3kV. Maximum leakage is 3μA.

STOP

Have Crew Chief verify setup and sign below before continuing.

Crew Chief Date 6/4/04

Hipot Heaters to Coil and Ground.

High Potential	Grounded	Floating	Leakage
All Strip Heaters	Coils, Yoke, Q1 Instrumentation Bus, Lead and Corrector Coil Busses, RTD's and Warm-up Heaters	Nothing	.470 μA

Hipot Coil to Heaters and Ground.

High Potential	Grounded	Floating	Leakage
All Coils	Strip Heaters, Yoke, Q1 Instrumentation Bus, 8kA and 5kA Lead Busses and Corrector Coil Busses, RTD's and Warm-up Heaters	Nothing	.796 μA

Technician(s) Date 6-4-04

Responsible Authority/Physicist Date 6-4-04

12.0 Installation of Hypertronics

12.1 Assemble/Install Hypertronics Connectors, **without Cover** at **Non-IP End** as per Q1 Module Assembly (ME-369894). Pin Numbers for connectors are shown in Table 12.1 below

Table 12.1

Module	Pin	Fermilab Label	CERN Label	KEK Label	Description
M1	1				Blank Module
M1	2				
M1	3				
M1	4				
M1	5				
M2	1	VTa1Q1	EE1111	a1	Q1 Lead Voltage Tap "a", primary
M2	2	VTa2Q1	EE1121	a2	Q1 Lead Voltage Tap "a",redundant
M2	3	VTc1Q1	EE1211	c1	Q1 Center Voltage Tap "c", primary
M2	4	VTc2Q1	EE1221	c2	Q1 Center Voltage Tap "c", redundant
M2	5	VTb1Q1	EE1311	b1	Q1 Lead Voltage Tap "b", primary
M3	1	Empty	Empty		No Connection
M3	2	Empty	Empty		No Connection
M3	3	Empty	Empty		No Connection
M3	4	Empty	Empty		No Connection
M3	5	VTb2Q1	EE1321	b2	Q1 Lead Voltage Tap "b",redundant
M4	1				Blank Module
M4	2				
M4	3				
M4	4				
M4	5				
M5	1	VTH1	EE8121		Corrector voltage tap Q1-H1 (skew dipole) (on MCBX, MCBXH, A+ lead)
M5	2	VTV1	EE8111		Corrector voltage tap Q1-V1 (normal dipole) (on MCBX, MCBXV A+ lead)
M5	3	Empty	Empty		No Connection
M5	4	Empty	Empty		No Connection
M5	5	Empty	Empty		No Connection
M6	1				Blank Module
M6	2				
M6	3				
M6	4				
M6	5				
M7	1	W1aQ1	EH8311+		Q1 Cryogenic Heater lead end - wire at top (CERN #1 I+)
M7	2	W2aQ1	EH8311-		Q1 Cryogenic Heater lead end - wire at bottom (CERN #1 I-)
M7	3	W1bQ1	EH8321+		Q1 Cryogenic Heater non-lead end - wire at top (CERN #2 I+)
M7	4	W2bQ1	EH8321-		Q1 Cryogenic Heater non-lead end - wire at bottom (CERN #2 I-)
M7	5	Empty	Empty		No Connection

Table 12.1 (continued)

Module	Pin	Fermilab Label	CERN Label	KEK Label	Description
M8	1	Blank			Blank Module
M8	2	Blank			
M8	3	Blank			
M8	4	Blank			
M8	5	Blank			
M9	1	H1aQ1	YT1111+	HA1	Q1 Protection (Strip) Heater, ("a" circuit) (CERN lead #1+)
M9	2	Empty	Empty		No connection
M9	3	H2aQ1	YT1111-	HA2	Q1Protection (Strip) Heater, ("a" circuit) (CERN lead #1-)
M9	4	Empty	Empty		No connection
M9	5	H1bQ1	YT1121+	HB1	Q1 Protection (Strip) Heater, ("b" circuit) (CERN lead #2+)
M10	1	Empty	Empty		No connection
M10	2	Empty	Empty		No connection
M10	3	Empty	Empty		No connection
M10	4	H2bQ1	YT1121-	HB2	Q1 Protection (Strip) Heater, ("b" circuit) (CERN lead #2-)
M10	5	Empty	Empty		No connection
M11	1				Blank Module
M11	2				
M11	3				
M11	4				
M11	5				
Note: Pin Numbers of Module M12 are not listed in numerical order.					
M12	1	TaQ1_I+	TT8311 I+		Q1 RTD, primary Wire color: Yellow
M12	2	TaQ1_I-	TT8311 I-		Q1 RTD, primary Wire color: Green
M12	3	TaQ1_V+	TT8311 U+		Q1 RTD, primary Wire color: Black
M12	4	TaQ1_V-	TT8311 U-		Q1 RTD, primary Wire color: Red
M12	5	TbQ1_I+	TT8321 I+		Q1 RTD, redundant: Wire color: Yellow
M12	6	TbQ1_I-	TT8321 I-		Q1 RTD, redundant: Wire color: Green
M12	11	TbQ1_V+	TT8321 U+		Q1 RTD, redundant: Wire color: Black
M12	10	TbQ1_V-	TT8321 U-		Q1 RTD, redundant: Wire color: Red
M12	9	Empty	Empty		No connection
M12	8	Empty	Empty		No connection
M12	7	Empty	Empty		No connection
M12	12	Empty	Empty		No connection
M12	13	Empty	Empty		No connection
M12	14	Empty	Empty		No connection
M12	15	Empty	Empty		No connection
M12	16	Empty	Empty		No connection
M12	17	Empty	Empty		No connection

Hypertronics Connector Pin Locations (Q1 non-ip end)

VIEW: Male (pin) solder cup side

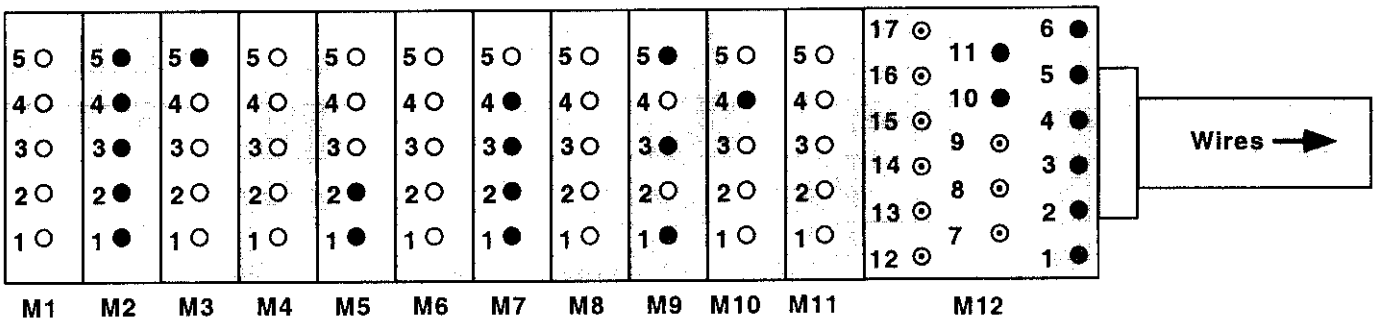

● Hole filled in grey: Wire soldered to pin.
⊙ Hole with dot in center: Pin exists but no wire soldered to it.
○ Hole filled in white: No pin. Hole is drilled out.

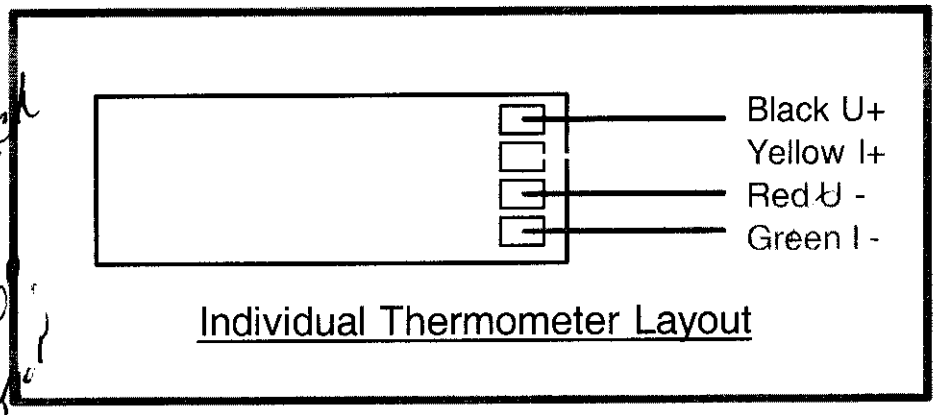

Note(s):

Ensure the Hypertronics cover has NOT been installed.

12.2 Contact LHC Project Physicist / designee and obtain signature before Hypertronics Cover is installed.

Responsible Authority/Physicist _____ Date 6-24-04

12.3 After LHC Project Physicist / designee has signed the above step, complete the installation of the Hypertronics.

Technician(s) _____ Date 6-24-04

13.0 Final Electrical Inspection

13.1 Perform an electrical inspection on each of the Individual Quadrants and the Cold Mass. Refer to the Valhalla and Leader Free Standing Coil Measurement Procedure (ES-292306).

To measure the Resistance of a Q1 Cold Mass:

1. Use Valhalla Scientific 4300B digital micro-ohmmeter.
2. Set Test Current to 1 amp.
3. Set Scale to 2V full scale.
4. Turn temperature compensation on.
5. Turn test current off.
6. Connect I_{HI} to Q4 inner power lead as shown in figure.
7. Connect I_{LO} to Q3 inner power lead as shown in figure.
8. Turn test current on.
9. Connect V_{HI} and V_{LO} to voltage taps as shown in resistance table.
10. To measure Total with leads, connect V_{HI} to Q4 power lead and V_{LO} to Q3 power lead.
11. Read resistance and record in traveler.

Q1 Cold Mass Electrical Measurements

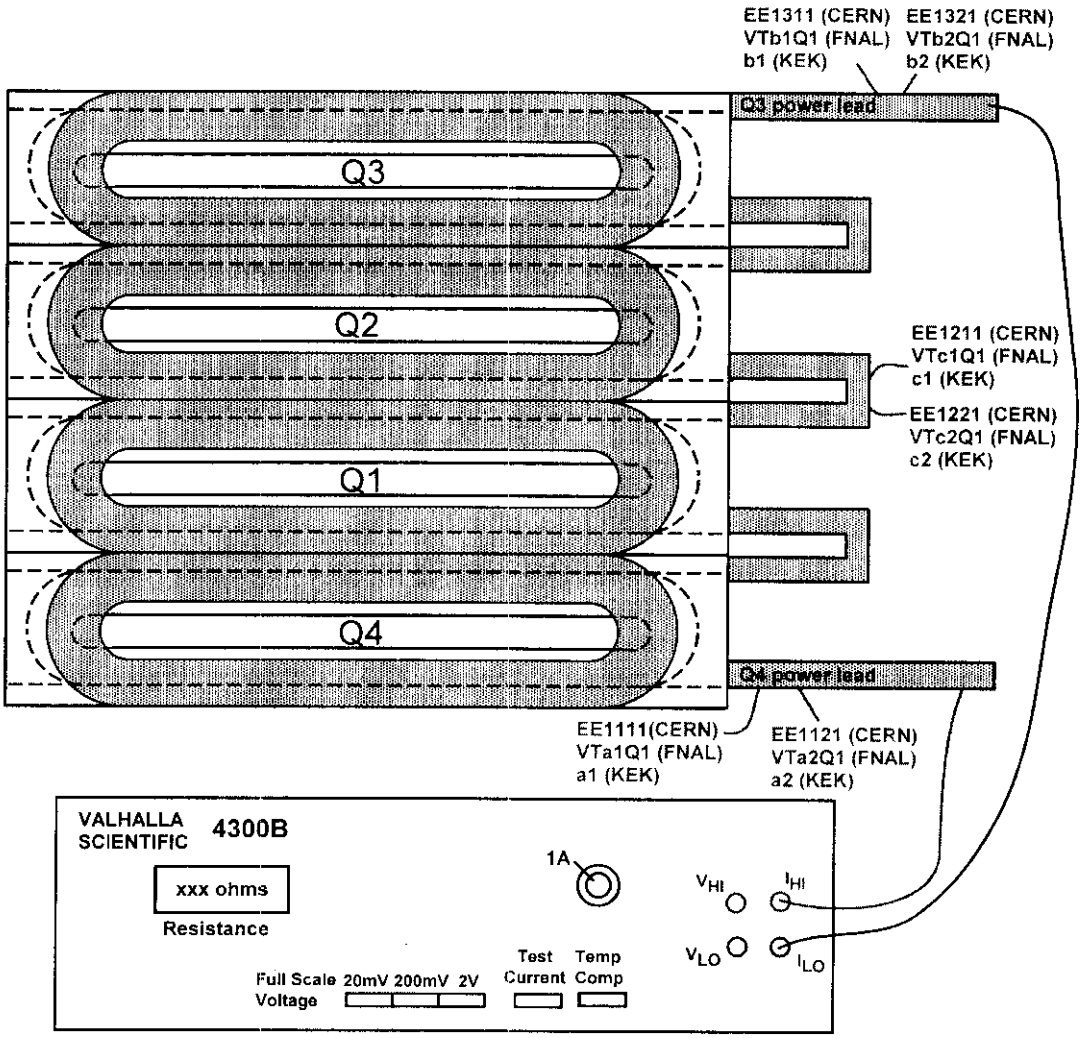

(Q1) Resistance				Nominal to Ω
Voltage Tap Serial Numbers				Total Resistance
Connect	Fermi	CERN	KEK	
V_{HI}	VTa1Q1	EE1111	a1	.3418 Ω
V_{LO}	VTc1Q1	EE1211	c1	
V_{HI}	VTc1Q1	EE1211	c1	.3418 Ω
V_{LO}	VTb1Q1	EE1311	b1	
V_{HI}	VTa1Q1	EE1111	a1	.6834 Ω
V_{LO}	VTb1Q1	EE1311	b1	
				Total Resistance with Leads
V_{HI}	Q4 Power Lead			.6838 Ω
V_{LO}	Q3 Power Lead			

Technician(s) 6-24-04 Date

Check resistance of Redundant Voltage Taps.

Q1 Redundant Voltage Taps				
Connect	Fermi	CERN	KEK	Resistance
V_{HI}	VTa2Q1	EE1121	a2	.3417 Ω
V_{LO}	VTc2Q1	EE1221	c2	
V_{HI}	VTc2Q1	EE1221	c2	.3417 Ω
V_{LO}	VTb2Q1	EE1321	b2	

Technician(s) 6-24-04 Date

To measure Ls and Q of a Q1 Cold Mass:

1. Use Hewlett Packard HP4284A digital LCR meter.
2. Turn line switch to on. The words "Measurement Display" should now be highlighted in the upper left corner of the display screen.
3. Use cursor buttons (shown in figure with arrows) to toggle down until "function" is highlighted near the upper left corner of the display screen.
4. Push the lowest of the five buttons to the right of display 3 times. (this button is shaded gray in the figure) The line in the display screen next to the second button down should now read "Ls-Q" and "function" near the upper left corner of the display should have the option "Ls-Q" chosen.
5. Scroll to "integer" using the cursor buttons. "Integer" will have the option "medium" chosen.
6. Press the 3rd button of five. The word "medium" should change to "long".
7. Connect H_{cur} to Q4 power lead as shown in figure.
8. Connect L_{cur} to Q3 power lead as shown in figure.
9. Connect H_{pot} and L_{pot} to voltage taps as shown in table.
10. Read Ls and Q from display and record in traveler.

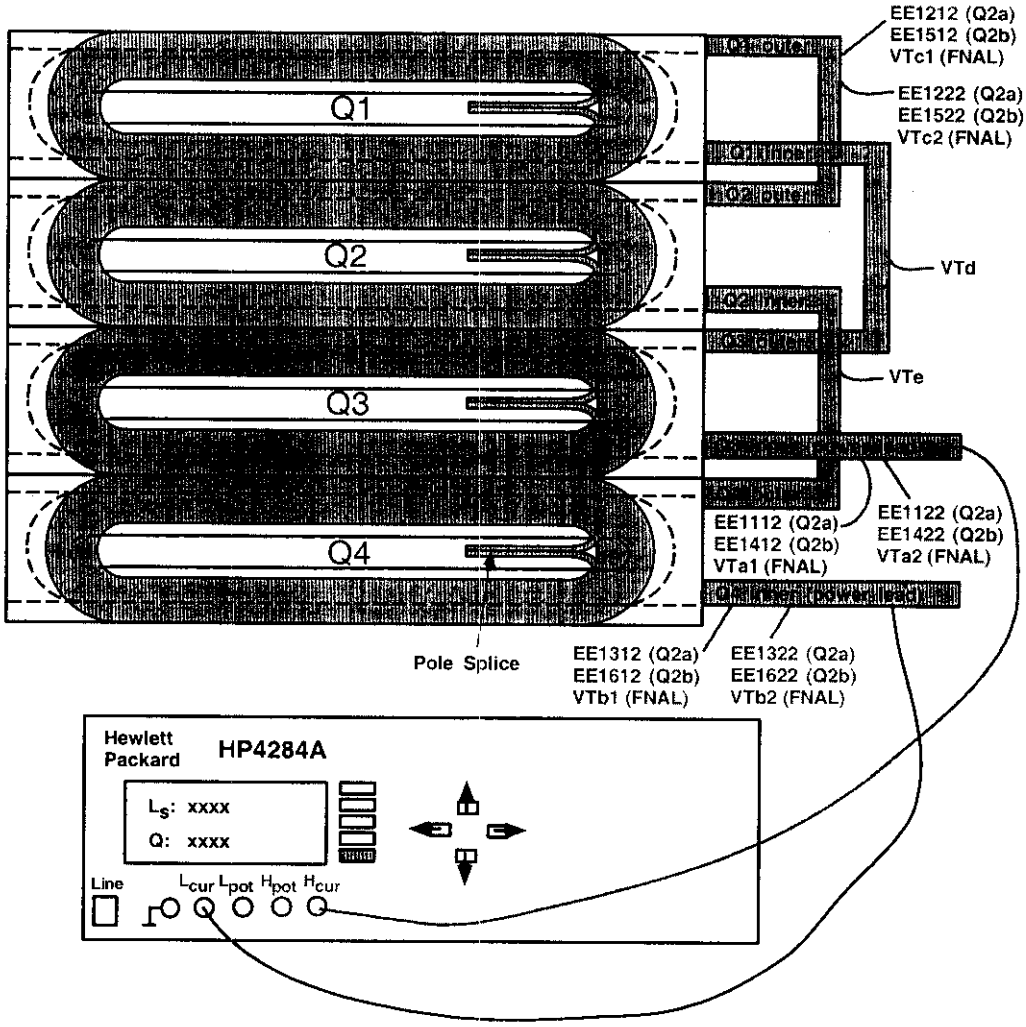

(Q1) Inductance				Nominal ~ to mH
Voltage Tap Serial Numbers				Total Inductance
Connect	Fermi	CERN	KEK	
H_{POT}	VTa1Q1	EE1111	a1	15,387 mH
L_{POT}	VTc1Q1	EE1211	c1	
H_{POT}	VTc1Q1	EE1211	c1	15,391 mH
L_{POT}	VTb1Q1	EE1311	b1	
H_{POT}	VTa1Q1	EE1111	a1	30,771 H
L_{POT}	VTb1Q1	EE1311	b1	

(Q1) Q-Factor				Nominal ~ to
Voltage Tap Serial Numbers				Total Q
Connect	Fermi	CERN	KEK	
H_{POT}	VTa1Q1	EE1111	a1	1.1
L_{POT}	VTc1Q1	EE1211	c1	
H_{POT}	VTc1Q1	EE1211	c1	1.1
L_{POT}	VTb1Q1	EE1311	b1	
H_{POT}	VTa1Q1	EE1111	a1	1.1
L_{POT}	VTb1Q1	EE1311	b1	

Technician(s)

6-24-04
Date

To measure the resistance of a Thermometer (RTD):

1. Use Hewlett Packard HP3457A digital multimeter.
2. Record temperature of building within +/- 5 degrees.
3. Press line button to turn line on.
4. Connect wires as shown in Figure below.
   U+ (Black) to Sense HI
   I+ (Yellow) to Input HI
   U- (Red) to Sense LO
   I- (Green) to Input LO
5. Push blue button (function key) once.
6. Push OHMF button.
7. Verify arrow in readout is above the 4WΩ (meaning a 4 wire resistance measurement).
8. Read resistance in ohms and record in traveler.

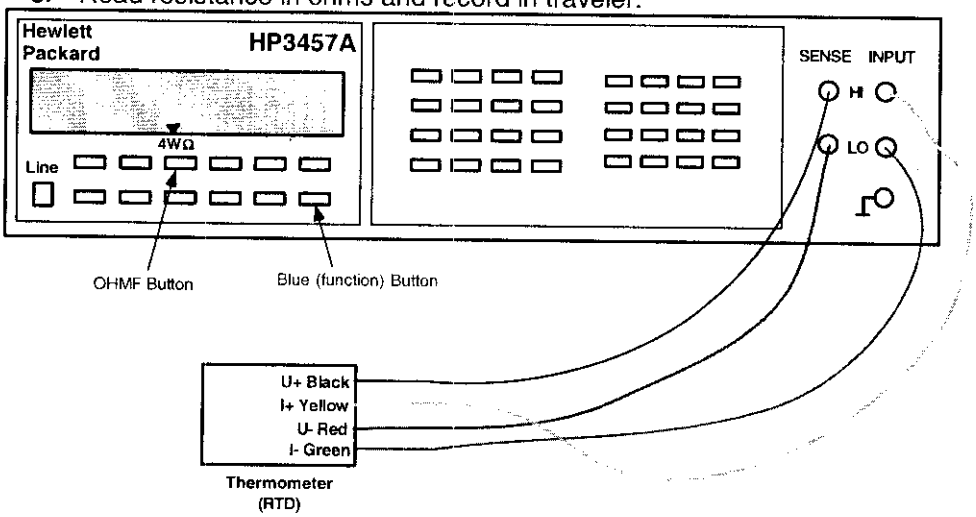

To measure the resistance of a Cryogenic (Warm-up) Heater

1. Use Hewlett Packard HP3457A digital multimeter.
2. Record temperature of building within +/- 5 degrees.
3. Press line button to turn line on.
4. Connect wires as shown in Figure below.
5. Push blue button (function key) once.
6. Push OHMF button.
7. Verify arrow in readout is above the 4WΩ (meaning a 4 wire resistance measurement).
   Note: Although this is technically a 4 wire measurement, it is effectively a 2 wire measurement, since there are only 2 wires connected to each heater.
8. Read resistance in ohms and record in traveler.

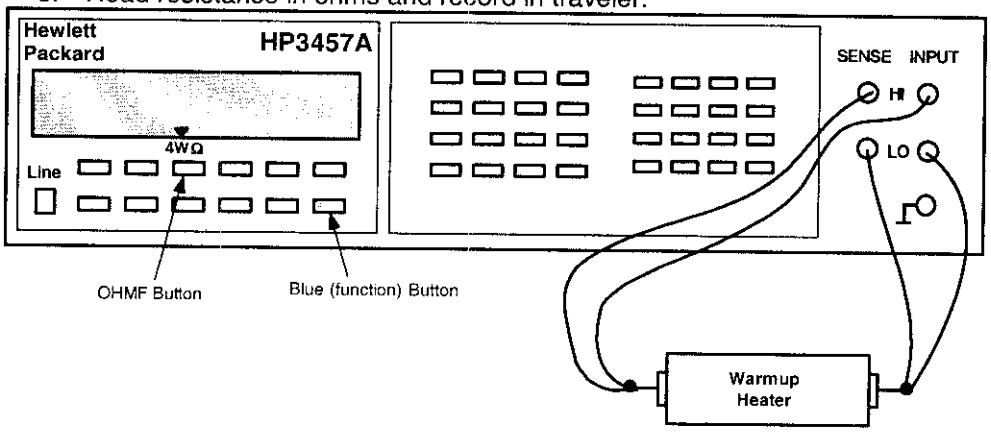

Q1 - RTD's and Cryogenic (warm-up) Heaters			
Temperature of Building (± 5°): _____			
Component	**Fermi**	**CERN**	**Resistance**
Q1 RTD, primary	TaQ1	TT8311	62.192 Ω
Q1 RTD, redundant	TbQ1	TT8321	60.98 Ω
Q1 Cryogenic (warm-up) Heater (LE) - wire at top (CERN #1 I+)	W1aQ1	EH8311+	16.1
Q1 Cryogenic (warm-up) Heater (LE) - wire at bottom (CERN #1 I-)	W2aQ1	EH8311-	Ω
Q1 Cryogenic (warm-up) Heater (Non-LE) - wire at top (CERN #2 I+)	W1bQ1	EH8321+	16.6
Q1 Cryogenic (warm-up) Heater (Non-LE) - wire at bottom (CERN #2 I-)	W2bQ1	EH8321-	Ω

Technician(s) _____ Date 6-24-04

Using the Hewlett Packard HP3457A digital multimeter, measure the Protection (Strip) Heater Resistance for Q1.

Q1 Protection (Strip) Heater Resistance					
Fermi	**CERN**	**KEK**	**Description**	**Limit**	**Resistance**
H1aQ1	**YT1111+**	**HA1**	**Circuit A**	Ω	30.5
H2aQ1	**YT1111-**	**HA2**			Ω
H1bQ1	**YT1121+**	**HB1**	**Circuit B**	Ω	30.4
H2bQ1	**YT1121-**	**HB2**			Ω

Technician(s) _____ Date 6-24-04

13.2 Using the HP4284A, connect power thru the corrector Power Leads (HA1 and HB1 to measure Q1-H1 or VA1 and VB1 to measure Q1-V1). Connect the Sense Leads as shown in table below and record resistance.

MCBX Corrector Coil Taps			
Component	**FermiLab Label**	**CERN Label**	**Resistance**
Q1-H1	**VTH1**	**EE8121**	21.04 Ω
	HA1	**N/A**	
Q1-V1	**VTV1**	**EE8111**	18.99 Ω
	VA1	**N/A**	

Technician(s) 6 29 04 Date

XXX 13.3 Hipot according to table below. Hipot to 3kV. Maximum leakage is 3μA.

STOP

Have Crew Chief verify setup and sign below before continuing.

Crew Chief 6-29-04 Date

Hipot Heaters to Coil and Ground.

High Potential	Grounded	Floating	Leakage
All Strip Heaters	Coils, Yoke, Q1 Instrumentation Bus, Lead and Corrector Coil Busses, RTD's and Warm-up Heaters	Nothing	.154 μA

Hipot Coil to Heaters and Ground.

High Potential	Grounded	Floating	Leakage
All Coils	Strip Heaters, Yoke, Q1 Instrumentation Bus, 8kA and 5kA Lead Busses and Corrector Coil Busses, RTD's and Warm-up Heaters	Nothing	.779 μA

Technician(s) 6/24/04 Date

Responsible Authority/Physicist 6/25/04 Date

14.0 Production Complete

XXX 14.1 Process Engineering verify that the Q1 Cold Mass Module Assembly Traveler (5520-TR-333754) is accurate and complete. This shall include a review of all steps to ensure that all operations have been completed and signed off. Ensure that all Discrepancy Reports, Nonconformance Reports, Repair/Rework Forms, Deviation Index and dispositions have been reviewed by the Responsible Authority for conformance before being approved.

Comments:

_____

_____

_____

_____

_____

_____

_____

_____

John J. Spostak — 5/2/05

Process Engineering/Designee — Date

TD - Engineering Fabrication Component Kit List

ORIGINAL

Process Engineering

Component Serial No.	LMQXA03
Kit submitted by:	John Szostak Ext. 2003
Fermi ID No.	02943C
Date submitted:	25-Mar-04
Need date:	1-Apr-04
Deliver to:	ICB
Use with Traveler No.	333754
Job No.	248
M&S task number:	300 1.1.1.3.4
Drawing Title:	Q1 MODULE ASSEMBLY - FINAL ASSEMBLY
Drawing No.	ME-369894 Rev. B
Drawing Title:	Q1 COLD MASS WELDED ASSEMBLY
Drawing No.	ME-390526 Rev. C

Material Control

Parts available

Verified by:	M. Schmidt
Fermi ID No.	04223
Date submitted to stockroom:	30-Mar-04

Parts issued

Issued by:	[illegible]
Fermi ID No.	11939
Date issued:	4/02/04
Parts received by E&F:	J. Szostak
Fermi ID No.	02943C
Date received by E&F:	4/2/04

	Description	Dwg Size	Number	Rev	Unit	Quantity Required	Location	Quantity Issued	E&F Verified	Routing Form Number	Spares Number / Comment
1	26 GAUGE WIRE EXTNS (For Voltage Taps)	MA	369832	*		ICB HAS					
2	20 GAUGE WIRE EXTNS (For Strip & Warmup Htrs)	MA	369833	*		ICB HAS					
3	WARMUP HEATER	MA	369834	A	EA	2	IB4 BIN	2	✓	79919	39 pcs.
4	RTD ASSEMBLY	MA	369835	A	EA	2	R2,S2,L5	2	✓	79920	48 pcs.
5	RTD MOUNTING BLOCK	MA	369893	B	EA	2	IB4 BIN	2	✓	79114	46 pcs.
6	.010" SOLDER STRIP	MA	369904	*	METER	ICB HAS					
7	KESTER 135 FLUX	MA	369911	*		A / R					
8	LINEAR CABLE CLAMP CAP Q1 / Q3	MB	369922	A	EA	1		1	✓	81459	RF 81468 RF 81459
9	SHCS, #4-40 x 1/4 LG. STN STEEL	MA	369938	*	EA	4	IB4 BIN	4	✓	79032	144 pcs.
10	LEAD BUS EXIT SUPPORT	MC	369951	B	EA	1	IB4 BIN	1	✓	81386	9 pcs.
11	LEAD SPLICE HOUSING	MD	369952	A	EA	1	IB4 BIN	1	✓	81387	9 pcs.

TD - Engineering Fabrication Component Kit List

ORIGINAL

	Description	Dwg Size	Number	Rev	Unit	Quantity Required	Location	Quantity Issued	E&F Verified	Routing Form Number	Spares Number / Comment
12	LEAD SPLICE HOUSING COVER	MC	369953	*	EA	1	IB4 BIN	1	✓	80809	8 pcs.
13	EXPANSION LOOP ASSEMBLY	MB	369962	*		ICB HAS					
* 14	LINEAR CABLE CLAMP ENCLOSER Q1	MB	369963	*	EA	2	MSV1626				Add'l Parts Request
15	Q1 / Q3 WARMUP HEATER BASE PLATE	MB	369997	A	EA	2	IB4 BIN	2	✓	80096	32 pcs.
16	MCBX CORRECTOR MOUNTING RING	ME	390037	C	EA	1	P/N		✓		16 pcs.
17	LQXA COLD MASS ASSEMBLY	ME	390108	E		ICB HAS					
18	IP END DOME WELDMENT	MD	390172	C	EA	1	P/N		✓		7 pcs.
19	MCBX CORRECTOR MOUNTING FLAT WASHER	MB	390228	*	EA	4	IB4 BIN	4	✓	77130	69 pcs.
20	SCREW FOR Q1/Q2 MCBX - 3.0" LG SILVER PLATED	MA	390247	*	EA	4	IB4 BIN	4	✓	74622	87 pcs.
21	NON-IP END DOME WELDMENT	MD	390255	A	EA	1	P/N	1	✓	78843	7 pcs.
22	TRANSPORT RESTRAINT ADJ. SCREW	MB	390270	A	EA	4	IB4 BIN	4	✓	76665	64 pcs.
23	MCBX CORRECTOR MAGNET WELDMENT	MD	390312	*		ICB HAS					
24	SHIM, .05 (.002")	MA	390482	*	EA	4	R2,S2,L4	4	✓	79123	129 pcs.
25	SHIM, .13 (.005")	MA	390483	*	EA	4	R2,S2,L4	4	✓	79124	132 pcs.
26	SHIM, .25 (.010")	MA	390484	*	EA	4	R2,S2,L4	4	✓	79125	115 pcs.
27	SHIM, .38 (.015")	MA	390485	*	EA	4	R2,S2,L4	4	✓	79126	104 pcs.
28	BEAM TUBE FLANGE	MC	390538	*	EA	2	IB4 BIN	2	✓	79332	14 pcs.
29	FACE PLATE FOR CORRECTION LEADS	MD	390734		EA	1	MSV1591	1	✓	81470.	Job Ticket 5114
30	NO. 10-32UNF x 4.78 (.188") LG CAP POINT SET SCREW; 18-8 SS	MA	393030	*	EA	8	IB4 BIN	8	✓	77839	36 pcs.
31	SHCS (FOR RTD ASSEMBLY)	MA	393180	*	EA	4	IB4 BIN	4	✓	79631	1717 pcs.

TD - Engineering Fabrication Component Kit List ORIGINAL

	Description	Dwg Size	Number	Rev	Unit	Quantity Required	Location	Quantity Issued	E&F Verified	Routing Form Number	Spares Number / Comment
32	WASHER (FOR RTD ASSEMBLY)	MA	393181	*	EA	4	IB4 BIN	4	✓	79519	242 pcs.
33	SHCS, 5/16 - 18 UNC - 2A x 1.00 LG. S.S.	MA	393263	*	EA	2	IB#4 Bin	2	✓	81437	RF#81437-in QC
34	SHCS, 1/4-20 UNC x .75 LG S.S. (For Splice Housing)	MA	393290	*	EA	8	IB4 BIN	8	✓	80709	92 pcs.
35	SCREW, FL. HD. SOCKET M12 x 1.75 x 20mm LG. S.S.	MA	393291	*	EA	2	IB4 BIN	2	✓	80694	116 pcs.
36	EXPANSION LOOP BUS SPLINE	MD	430053	*		ICB HAS					
37	INSTRUMENTATION BUS SUPPORT SLEEVE	MB	430054	*	EA	2	IB4 BIN	2	✓	80804	16 pcs.
38	BACKING SPLINE - EXIT TO SPIDER	MB	430058	*	EA	1	R2,2,3	1	✓	81103	17 pcs.

TD - Engineering Fabrication Component Kit List

ORIGINAL

	Description	Dwg Size	Number	Rev	Unit	Quantity Required	Location	Quantity Issued	E&F Verified	Routing Form Number	Spares Number / Comment
Q1 INSTRUMENTATION WIRE FEEDTHRU ASSY		MB	430008	A	EA	(1)					
39	**WIRE FEED-THRU TUBE**	**MB**	**369827**	**A**	**EA**	**3**	**R1,2,4**	3	✓	77319	**63 pcs**
40	**SLEEVE - INST. WIRE TUBE**	**MB**	**369996**	**A**	**EA**	**3**	**IB#4-Bin**	3	✓	80657	**90 pcs**
41	**INSTRUMENTATION WIRE BUS**	**MB**	**369998**	*		**ICB HAS**					
42	**ANCHOR - INSTRUMENTATION TUBE**	**MB**	**430009**	*	**EA**	**1**	**IB#4-Bin**	1	✓	80811	**17 pcs**
43	**END INSTRUMENTATION WIRE TUBE**	**MB**	**430011**	*	**EA**	**1**	**R1,S2,L3**	1	✓	80812	**7 pcs**
Q1 EXPANSION LOOP STABILIZER ASSEMBLY		ME	430039	*	EA	(1)					
44	**SHCS, 1/4-20 UNC-2A x .50 LG. S.S.**	**MA**	**393179**	*	**EA**	**4**	**IB#4-Bin**	4	✓	79629	**137 pcs**
45	**SHCS, #10-32 UNF-2A x .50 LG. S.S.**	**MA**	**393280**	*	**EA**	**2**	**IB#4-Bin**	2	✓	81066	**198 pcs**
46	**SHCS, #10-32 UNF-2A x 1.00 LG. S.S.**	**MA**	**393281**	*	**EA**	**4**	**IB#4-Bin**	4	✓	81067	**196 pcs**
47	**SHCS, #10-32 UNF-2A x 1.25 LG. S.S.**	**MA**	**393282**	*	**EA**	**4**	**IB#4-Bin**	4	✓	81068	**196 pcs**
48	**NUT, HEX #10-32 UNF- 2B S.S.**	**MA**	**393283**	*	**EA**	**8**	**IB#4-Bin**	8	✓	81069	**192 pcs**
49	**STABILIZER SUPPORT**	**MC**	**430007**	*	**EA**	**2**	**R2,S2,L4**	2	✓	80987	**39 pcs**
50	**STABILIZER BRACKET**	**MB**	**430010**	**A**	**EA**	**2**	**R2,2,4**	2	✓	80988	**42 pcs**
51	**EXPANSION LOOP STABILIZER MOUNT**	**MD**	**430012**	**A**	**EA**	**1**	**R7,2,4**	1	✓	80944	**8 pcs**
52	**HEATER WIRE HOLD DOWN CLIP**	**MB**	**430015**	*	**EA**	**2**	**R2,2,4**	2	✓	80989	**59 pcs**
53	**SLEEVE, G-11 x .25 LG**	**MB**	**430048**	*	**EA**	**8**	**IB#4-Bin**	8	✓	80990	**76 pcs**

TD - Engineering Fabrication Component Kit List

ORIGINAL

	Description	Dwg Size	Number	Rev	Unit	Quantity Required	Location	Quantity Issued	E&F Verified	Routing Form Number	Spares Number / Comment
Q1 EXPANSION LOOP LINEAR CABLE CLAMP ASSY.		MD	430040	A	EA	(1)					
54	**LINEAR CLAMP SLIDE**	**MC**	**369924**	**D**	**EA**	**1**	**R1,S3,L2**	1	✓	80926	**16 pcs**
55	**LINEAR CLAMP BASE MOUNT**	**MC**	**369925**	**E**	**EA**	**1**	**R1,S3,L2**				APR **16 pcs**
56	**LINEAR CLAMP BASE BLOCK**	**MD**	**369926**	**C**	**EA**	**1**	**R7,2,4**	1	✓	80940	**16 pcs**
57	**SCREW, FLAT HEAD SOCKET, M12 x 1.75 x 20mm LG S.S.**	**MA**	**393291**	*	**EA**	**2**	**IB#4-Bin**	2	✓	80694	**116 pcs**
58	**SHCS 3/8-16 UNC-2A x 1.00 LG S.S.**	**MA**	**393292**	*	**EA**	**2**	**IB#4-Bin**	2	✓	81393	**2 pcs**
Q1 LEAD END SPIDER ASSY.		MB	430042	B	EA	(1)					
59	**SHCS, #6-32 UNC-2A x 1.00 LG S.S.**	**MA**	**393082**	*	**EA**	**2**	**IB#4-Bin**	2	✓	81360	**98 pcs**
60	**BUS SPIDER HOUSING ASSEMBLY**	**MD**	**430044**	**C**	**EA**	**1**	**IB#4 Bin**	1	✓	81469	**Plenty of parts in bin**
61	**BUS SPIDER HOUSING TOP COVER**	**MB**	**430056**	*	**EA**	**1**	**IB#4-Bin**	1	✓	81010	**17**
62	**BUS SPIDER HOUSING BOTTOM**	**MB**	**430055**	**A**	**EA**	**1**	**IB#4 Bin**	1	✓	81429	**RF81429-in QC**
63	**SPIDER BUMPER**	**MB**	**430075**	**B**	**EA**	**2**	**IB#4**	2	✓	81447	**RF#81447-in QC**
64	**SHCS, #8-32 UNC-2A x .75 LG S.S.**	**MA**	**393071**	*	**EA**	**4**	**IB#4 Bin**	4	✓	81436	**RF#81436-in QC**
65	**WASHER, NARROW FLAT, #8 S.S.**	**MA**	**393318**	*	**EA**	**3**	**IB#4-Bin**	3	✓	81363	**247**
66	**SHCS, #8-32 UNC-2A x 1.25 LG S.S.**	**MA**	**393317**	*	**EA**	**3**	**IB#4-Bin**	3	✓	81364	**97**
67	**HEX NUT, 8-32 UNC-2A S.S.**	**MA**	**393275**	*	**EA**	**3**	**IB#4 Bin**	3	✓	81438	**RF#81438-in QC**
68	**HEX NUT, 6-32 UNC-2A S.S.**	**MA**	**393089**	*	**EA**	**2**	**IB#4-Bin**	2	✓	81362	**98**
69	**WASHER , NARROW FLAT #6 S.S.**	**MA**	**393088**	*	**EA**	**2**	**IB#4-Bin**	2	✓	81361	**498**
70	**CORRECTOR WIRE CLAMP**	**MB**	**430071**	**A**	**EA**	**1**	**IB#4**	1	✓	81396	**9 pcs**
71	**CORRECTOR WIRE SUPPORT**	**MC**	**430070**	**A**	**EA**	**1**	**IB#4**	1	✓	81397	**9 pcs**

TD - Engineering Fabrication Component Kit List ORIGINAL

	Description	Dwg Size	Number	Rev	Unit	Quantity Required	Location	Quantity Issued	E&F Verified	Routing Form Number	Spares Number / Comment
	INSULATED BEAM TUBE	MD	369955	A	EA	(1)					
72	**Q1 BEAM TUBE**	**MC**	**369954**	*	**EA**	**1**	**ICB**				**10 pcs**
73	**Q1 ABSORBER LAMINATIONS**	**MC**	**390670**	*	**EA**	**ICB Has**		9884		81065	ADDITIONAL PARTS REQ

Revision Request Control Number: 1580

Specification Number: 5520 - TR - 333754 Current Revision: NONE

Traveler or Document Title LHC Q1 LMQXA Cold Mass Module Assembly Traveler

Step #/Description of Revision:

4.3 Modified Step. Changed to "Configure tooling for End Dome Mounting per (ME-369765, View E-E.)"
4.5 Modified Step. Changed to "Rotate the Q1 Cold Mass, with the Power Leads facing down, into the proper orientation as shown in Figure 4.5-A." Added New Figure from Rodger Bossert.
4.6 Modified Step. Changed to "Perform a stretched wire measurement of the system to align the Cold Mass within ± .2 mR." Changed Signoff to Responsible Authority/Physicist.
4.7 Added Step. "Mount the Corrector Coil Mounting Ring (ME-390037) to the Corrector Coil (MD-390312)."
4.7 Modified Step. Changed to "Weld Correction Coil Mounting Flange (ME-390037) to Q1 Lead End Plate." (New Step 4.10)
4.8 Added Step. "Position and align the Corrector Coil (MD-390312)."
4.9 Added Step. "Tack weld the Corrector Coil Mounting Ring (ME-390037) to the Q1 Cold Mass Assembly per Q1 Coldmass Welded Assembly (ME-390526)."
4.11 Added Step. "Disassemble the Corrector Coil (MD-390312) from the Corrector Coil Mounting Ring (ME-390037)."
5.0 Modified Step. Replaced Figure 5.0-A with New Figure from Rodger Bossert.
5.11 Modified Step. Changed to "Construct / Obtain Expansion Loop Assembly per Drawing (MB-369962)." (New Step 5.2)
5.11 Added Step. "Weld Warm-up Heater Base Plates (MA-360007) and RTD Mount Blocks to End Plates as per Q1 Module Assembly (ME-369894)."(New Step 5.11)
5.12 Modified Step. Changed to "Solder the lower 8kA bus to Lower Lead as per Q1 Module Assembly Drawing (ME-369894) and Figure 5.0-B."(New Step 5.3)
5.13 Modified Step. Changed to "Solder the upper 8kA bus to Upper Lead as per Q1 Module Assembly Drawing (ME-369894) and Figure 5.0-B."(New Step 5.4)
5.17 Modified Step. Changed to "Attach Q1 Bus Exit Support Part Numbers to Q1 Lead as per Q1 Module Assembly (ME-369894)." (New Step 5.8)
5.18 Modified Step. Added Note: "USE ONLY CERN LABELS ON WIRES." Added New Table from Rodger Bossert. (New Step 5.9)
5.19 Modified Step. Changed to "...Verify that there is sufficient slack in cable to allow for two inches of differential thermal contraction." Replaced Figures with New Figures from Rodger Bossert. (New Step 5.10)
5.20.1 Removed Step. "Install Warm-up Heater Base Plates (MA-369997) by welding onto in End Plate. (Check each box as Heater is installed.)"

John Szostak	Jim Rife	11/10/2003
Originator	Responsible Authority	Date
Revision Incorporated into the Traveler:	John Szostak	2/19/2004
	Revision Incorporated By	Date
Process Engineering Final Review:	Bob Jensen	2/19/2004
	Process Engineering/Designee	Date

Instructions for the completion of the Revision Request Form

Note(s):

Multiple steps may be effected by one Revision Request Form but only one specific Traveler or Document may be effected by each Revision Request Form.

If completing this form by hand, a Revision Request Control Number must be obtained before processing.

If completing this form entirely by electronic means, the printed copy to be filed in the Process Engineering Office is to be initialed by the individual incorporating the Revision Request and the individual who reviewed the Traveler or Document.

Originator Instructions:

1) Specification Number: - Enter the Specification Number of the Traveler or Document to be revised. (Document title is inserted automatically from the spec. #)

2) Current Revision: - Enter the Revision of the Traveler or Document to be revised.

3) Step# / Description of the Revision: - Enter a description of the revision to be made and the step# it applies to, if applicable. If needed to describe the revision attach a copy of the page(s). If the revision is coming from a related document such as a Discrepancy Report or an Engineering Order attach a copy of that document to the Revision Request Form.

4) Originator: - Originator is the person generating the form. (Select Name from List)

5) Responsible Authority: - Responsible Authority is person responsible for the process in question. (Select Name from List)

Process Engineering Office Instructions:

1) Revision Incorporated into the Traveler: - Signature of the individual who incorporated the revision.

2) Process Engineering Final Review: - Review the Traveler or Document revised, sign and date the form. The original completed Revision Request Form will be retained by the Process Engineering Office in the Revision Request Binder.

Revision Request Control Number: 1612

Specification Number: 5520 - TR - 333754 Current Revision: A

Traveler or Document Title LHC Q1 LMQXA Cold Mass Module Assembly Traveler

Step #/Description of Revision:

1.5 Removed Step. "All personnel performing steps in this traveler must have documented training for this traveler and associated operating procedures."
5.17 Removed Step. "Place the MCBX Correction Coil (MD-390312) in the Corrector Magnet Mounting Tooling."
5.18 Removed Step. "Attach the MCBX Corrector Magnet Alignment Tooling (ME-390390) to the MCBX Corrector Magnet (MD-390312). Align the Scribe Lines on the Corrector Magnet (MD-390312) with those on the tooling."
5.19 Removed Step. "Mount the Mini Level to the top of the MCBX Corrector Magnet Alignment Tooling"
5.20 Removed Step. "Rotate the MCBX Correction Coil (MD-390312) such that the Mini Level is Horizontal 0.00 mm/m (+/- 0.05 mm/m)."
5.22 Modified Step. Added Technician Signoff for alignment. (New Step 5.18)
5.28 Added Step. "Add Mount to Face Plate"
5.29 Added Step. "Place Voltage taps as follows: "
7.12 Added Step. "Mount the KEK Cold Mass Leveling Bracket (MD-390711) to the X side of the magnet. Record the serial number of the mini level that will be used below." Per Tom Page.
7.13 Added Step. "Adjust the mini level so that it is level with respect to gravity. See the mini level instructions for this procedure."
7.14 Added Step. "Place the mini level on the leveling bracket so that the readout is facing the Non-IP end (corrector end) of the magnet. Push the level up against the leveling bracket top screws. Record the Magnet Level here" Per Tom Page.
7.15 Added Step. "Remove the mini level but leave the KEK Cold Mass Leveling Bracket (MD-390711) mounted to the Cold Mass." Per Tom Page.
7.16 Added Step. "Move Coldmass to the Assembly Table"
8.2 Removed Step. "Verify Alignment of Q1 and Corrector Magnet (MD-390312) as per Q1 Cold Mass Welded Assembly (ME-390526)." Task completed in step 5.22 per Tom Page and LMQXA01.
8.4 Added Step. "Place a mark 40mm from the laminations on IP End of the Beam Tube."
8.5 – 8.11 Removed Steps. Steps removed per Tom Page.
8.5 Added Step. "Verify that the placement of the mark in Step 8.4 is correct."
8.6 Added Step. "Using the Wachs Cutter, cut the IP End of the Beam Tube at the mark."
8.7 Added Step. "Measure the Beam Tube length and record this measurement below."

John Szostak	Jim Rife	2/24/2004
Originator	Responsible Authority	Date
Revision Incorporated into the Traveler:	John Szostak	6/4/2004
	Revision Incorporated By	Date
Process Engineering Final Review:	Jamie Blowers	6/4/2004
	Process Engineering/Designee	Date

Instructions for the completion of the Revision Request Form

Note(s):

Multiple steps may be effected by one Revision Request Form but only one specific Traveler or Document may be effected by each Revision Request Form.

If completing this form by hand, a Revision Request Control Number must be obtained before processing.

If completing this form entirely by electronic means, the printed copy to be filed in the Process Engineering Office is to be initialed by the individual incorporating the Revision Request and the individual who reviewed the Traveler or Document.

Originator Instructions:

1) Specification Number: - Enter the Specification Number of the Traveler or Document to be revised. (Document title is inserted automatically from the spec. #)

2) Current Revision: - Enter the Revision of the Traveler or Document to be revised.

3) Step# / Description of the Revision: - Enter a description of the revision to be made and the step# it applies to, if applicable. If needed to describe the revision attach a copy of the page(s). If the revision is coming from a related document such as a Discrepancy Report or an Engineering Order attach a copy of that document to the Revision Request Form.

4) Originator: - Originator is the person generating the form. (Select Name from List)

5) Responsible Authority: - Responsible Authority is person responsible for the process in question. (Select Name from List)

Process Engineering Office Instructions:

1) Revision Incorporated into the Traveler: - Signature of the individual who incorporated the revision.

2) Process Engineering Final Review: - Review the Traveler or Document revised, sign and date the form. The original completed Revision Request Form will be retained by the Process Engineering Office in the Revision Request Binder.

Traveler Title:	Specification No:	Revision:	DR No:
LHC Q1 LMQXA Cold Mass Module Assembly Traveler	5520-TR-333754	A	HGQ-0457

Step No:	Drawing No:	Routing Form No:	Serial No:	Rework ID:
4.5	ME 369894		LMQXA03	0

Discrepancy Description:

During this step of assembly, A damaged wire (HA-2) was found approx 3" from splice block. This damage seems to be limited only to the insulation of the wire, not the wire strands.

Originator: Damon Bice

Date: 4/19/2004

Cause of Nonconformance:

Unknown.

Responsible Authority: Rodger Bossert

Date: 12/2/2004

Disposition:

Patch insulation and Varnish, then continue.

Responsible Authority: Rodger Bossert

Date: 12/2/2004

Corrective Action to Prevent Recurrence:

None at this time. No Traveler Change.

Responsible Authority: Rodger Bossert

Date: 12/2/2004

Corrective Action/Disposition Verified By: John Szostak

Date: 12/6/2004

Will Configuration be affected?: ☐ YES ☑ NO

Identified problem area:

☐ Material ☐ Manpower ☑ Method ☐ Machine ☐ Measurement

Reviewed By: Bob Jensen

Date: 12/6/2004

Traveler Title:	Specification No:	Revision:	DR No:
LHC Q1 LMQXA Cold Mass Module Assembly Traveler	5520-TR-333754	A	HGQ-0458

Step No:	Drawing No:	Routing Form No:	Serial No:	Rework ID:
4.8	ME369894	333754	LMQXB03	0

Discrepancy Description:

Corrector coil mounting ring contacts splice block of Q1 magnet when installed, preventing the corrector mounting ring from being installed in a level position.

SCANNED
APR 26 2004

Originator: Damon Bice

Date: 4/19/2004

Cause of Nonconformance:

Lead block on KEK cold mass not to spec / rotated slightly.

Responsible Authority: Thomas Page

Date: 4/19/2004

Disposition:

Chamfer the corner of the G-10 splice block as necessary, approximately 1/6 - 1/8 inch.

Responsible Authority: Thomas Page

Date: 4/19/2004

Corrective Action to Prevent Recurrence:

The remaining KEK cold masses will have to be filed as necessary. (TRR No. 1612)

Responsible Authority: Thomas Page

Date: 4/19/2004

Corrective Action/Disposition Verified By: Jim Rife

Date: 4/20/2004

Will Configuration be affected?: ☐ YES ☑ NO

Identified problem area:

☐ Material ☐ Manpower ☑ Method ☐ Machine ☐ Measurement

Reviewed By: Bob Jensen

Date: 4/23/2004

ADDITIONAL PARTS REQUEST

ADDITIONAL PARTS REQUEST FORM SHALL BE USED TO ACCESS ALL ITEMS FROM INVENTORY WITH THE EXCEPTION OF PARTS KITS.

THIS FORM MUST BE SIGNED BY AN ACQUISITIONER BEFORE BRINGING TO THE STOCKROOM

MAGNET OR COIL # *LMQXA03*

REQUESTED BY *Jim Rife*

DATE REQUESTED *4/27/04*

DELIVER TO *Jim Rife*

BUDGET CODE *LCD 300.1.1.1.3.4*

NEED BY DATE *4/27/04*

JOB TICKET # _____

MMR # _____

MACHINE SHOP REQ. # _____

PO # _____

PURCHASE RELEASE # _____

OTHER _____

PARTS STATUS (CHECK ONE)

☐ DEFECTIVE PARTS ISSUED ☐ PARTS SCRAPPED ☐ A/R ITEMS

☐ DEFECTIVE ASSEMBLY ☐ MISSING FROM KIT ALREADY ISSUED

☒ INDIVIDUAL PARTS ☐ CONSUMABLES ☐ PARTS LOST

ACQUISITIONER SIGNATURE Marsha Schmidt **ID#** 4223 **DATE** 4/27/04

PLEASE INDICATE REVISION REQUIRED

	LOCATION	PART #	REV	QTY	UOM	DESCRIPTION	RF #	SIR #
1	IB4 BIN	MA-418114	A	4	Each	M3 Thd. Stud Assy		
100	R1,1,2	MA-418117	0	4	Each	Pan HD Screw 4-40 X .5 Steel		
140	R1,1,2	MA-418116	0	4	Each	Pan HD Screw 6-32 X .375 Steel		
9	IB4 BIN	MA-418125	0	1	Each	Support Arm Weldments 13 Units		
107	R1,1,2	MA-418109	A	4	Each	Tie Down Link		
3	IB4 BIN	MA-418112	0	1	Each	Clamping Bar		
3	IB4 BIN	MA-418113	0	1	Each	Grommet		
11	R1,1,2	MC-418067	A	1	Each	Connector-Access Covers-13 Unit		

STOCKROOM SIGNATURE _____ **ID#** _____ **DATE** _____

PARTS DELETED FROM DATABASE _____ **ID#** _____ **DATE** _____

A COPY OF THIS FORM IS TO BE INCLUDED IN WITH THE TRAVELER

PARTS RECEIVED BY _____ **ID#** _____ **DATE** _____

REVISION REQUIRED

PART #	REV	QTY	UC	UOM	DESCRIPTION	RF #	SIR #
41	*A*	*1*	*Each*		*13 Unit Male Pin Rack*		
418143	*0*	*10*			*Anti-Arc Kapton*		

Cryogenic Thermometer Traveller

DESCRIPTION

Part description:	Cryogenic thermometer	**Top Assembly Identification:**	LMQXA03
Part Identification:	HCQITESCXT-CR012270		
Serial Number:	CX_LS_X16749	**Manufactured By:**	Fermilab

CABLING

Connector Tag Name TT8311

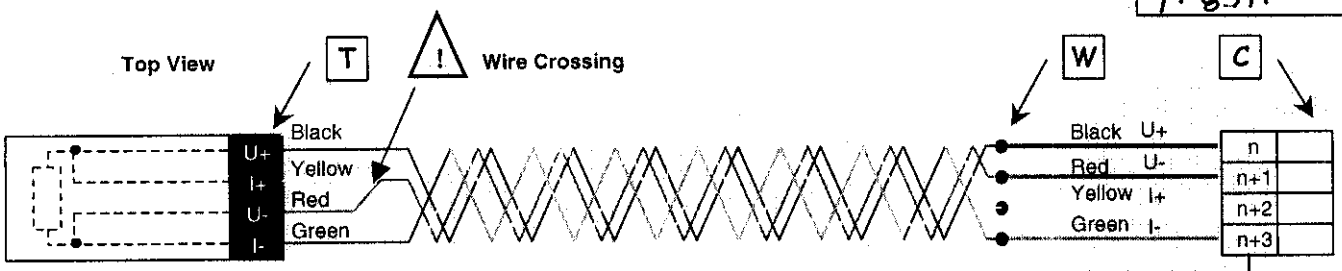

Fixing Case

Thread ☐
Hole ☐
Stud ☐

Thermometer Cable for Type ST

ρ (300 K) = 0.32 Ohm/m
Copper AWG 30
Length = ☐ m

Extension

ρ (300 K) = 0.07 Ohm/m
Copper AWG 24
Length: 0.8 m

CHECKS

Intervention	Date/ DD-MMM-YYYY	Check Point	R(U+,U-,I+,I-) [Ohm] 4W	R(U-,I-) [Ohm] 2W	R(U+,I+) [Ohm] 2W	R(U+,GND) [Ohm] 2W	Temperature [K]	Firm/Laboratory	Checked by
Calibration	21-Jan-2002	T	66.29	n.a	n.a	OVL	Ambient	IPN	Joly
Expedition	12-Mar-2003	T	64.888	0.1	0.1	OVL	293	CERN	Grivat
Reception	21-Apr-2004	T W C	66.55				70° F	FERMI	BICE
		T W C							
		T W C							
		T W C							
		T W C							
		T W C							
		T W C							
		T W C							
		T W C							
		T W C							
		T W C							
		T W C							
		T W C							
		T W C							
		T W C							
		T W C							
		T W C							
		T W C							
		T W C							
		T W C							
		T W C							
		T W C							
		T W C							
		T W C							

Cryogenic Thermometer Traveller

DESCRIPTION

Part description:	Cryogenic thermometer	**Top Assembly Identification:**	LMQXA03
Part Identification:	HCQITESCXT-CR012300	**Manufactured By:**	Fermilab
Serial Number:	CX_LS_X16752		

CABLING

Connector Tag Name TT 8321

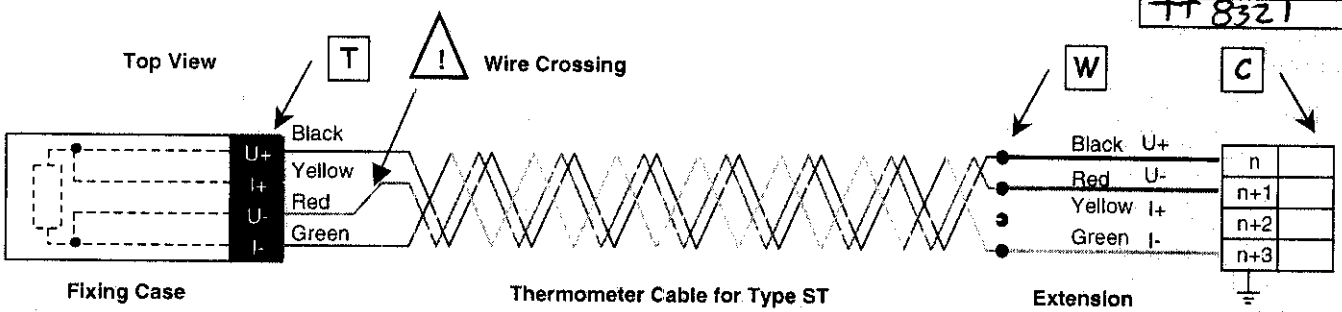

Fixing Case

Thread ☐
Hole ☐
Stud ☐

Thermometer Cable for Type ST

ρ (300 K) = 0.32 Ohm/m
Copper AWG 30
Length = ☐ m

Extension

ρ (300 K) = 0.07 Ohm/m
Copper AWG 24
Length: 0.8 m

CHECKS

Intervention	Date/ DD-MMM-YYYY	Check Point	R(U+,U-,I+,I-) [Ohm] 4W	R(U-,I-) [Ohm] 2W	R(U+,I+) [Ohm] 2W	R(U+,GND) [Ohm] 2W	Temperature [K]	Firm/Laboratory	Checked by
Calibration	*21-Jan-2002*	T	*62.06*	*n.a*	*n.a*	*OVL*	*Ambient*	*IPN*	*Joly*
Expedition	*12-Mar-2003*	T	*60.601*	*0.1*	*0.1*	*OVL*	*293*	*CERN*	*Grivat*
Reception	21-Apr-2004	T W C	62.22				70°F	FERMI	BICE
		T W C							
		T W C							
		T W C							
		T W C							
		T W C							
		T W C							
		T W C							
		T W C							
		T W C							
		T W C							
		T W C							
		T W C							
		T W C							
		T W C							
		T W C							
		T W C							
		T W C							
		T W C							
		T W C							
		T W C							
		T W C							
		T W C							
		T W C							
		T W C							

CERN LHC MQXA

Acceptance Test at FNAL

QUALITY RECORD

Cryogenics Science Center

KEK, High Energy Accelerator Research Organization

Magnet ID : MQXA-03

Date of approval : 1/25/05

Approved by : _____ (FNAL)

: _____ (KEK)

Ver. 0
Ver A (with initial results)

1. Appearance Check

Procedure	Criteria
Check appearance of the magnet by visual inspection.	No harmful defects or deformation
Result at TOSHIBA	
Acceptable	
Result at FNAL	

2. Interface Dimensions

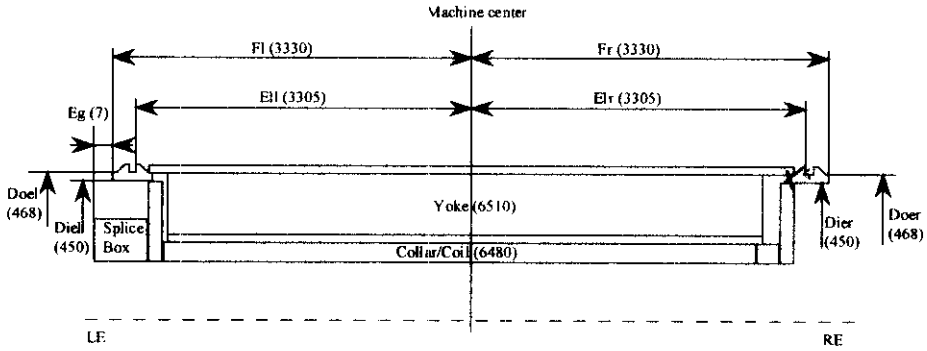

1) Dimensions	Unit:mm
Procedure	**Criteria**
1) Dimension Check Measure following dimensions a, b, c : Measuring range: every 45 deg. from 0 deg. d : Splice Box : four points	
a) Machine center - Interface	a) 3330 –6/+0
b) Interface outer diameter (Doel,Doer)	b) ϕ468 –4/+0
c) Interface inner diameter (Diel,Dier)	c) ϕ450 –4/+0
d) End Ring - Splice box(Eg)	d) 7 -5/+5

Result at TOSHIBA

Critera	3330 -6/+0		ϕ468 -4/+0		ϕ450 -4/+0		7
Position	Fl	Fr	Doel	Doer	Diel	Dier	Eg
0 deg.	3329.5	3328.5	467.82	467.00	450.07	449.22	3.8
45 deg.	3329.5	3329.0	466.89	466.62	449.14	448.88	
90 deg.	3329.0	3329.0	467.02	467.52	449.17	449.84	3.9
135 deg.	3329.0	3329.5	466.76	466.83	448.92	449.12	
180 deg.	3329.0	3329.0					4.2
225 deg.	3328.5	3329.5					
270 deg.	3328.5	3330.0					4.8
315 deg.	3329.9	3330.0					
Result	Acceptable		Acceptable		Acceptable		Acceptable

Result at FNAL

Critera	3330 -6/+0		ϕ468 -4/+0		ϕ450 -4/+0		7
Position	Fl	Fr	Doel	Doer	Diel	Dier	Eg
Top 0 deg.	3330	3330	PASS		PASS		PASS
45 deg.							
90 deg.	3330	3330	PASS		PASS		PASS
135 deg.							
Bot. 180 deg.	3330	3330					PASS
225 deg.							
270 deg.	3330	3330					PASS
315 deg.							
Result							

2) End ring interface		
Procedure		Criteria
Check the weld edge preparation using ϕ449 +0/-0.02 gauge.		1) The gauge shall be inserted into the end ring. 2) Measurement data will be reported if the gage cannot be inserted.
Measurement part	Result at TOSHIBA	Remarks
LE side	Acceptable	------
RE side	Acceptable	------
Measurement part	Result at FNAL	Remarks
LE side		
RE side		

3) Radial envelope	
Procedure	Criteria
Check shell radial envelope using ϕ530mm gauge. (dummy cold-mass support)	The gauge shall pass the magnet.
Result at TOSHIBA	
Acceptable	
Result at FNAL	

4) Magnet bore	
Procedure	Criteria
Check appearance of the magnet bore by visual inspection.	No harmful defects or deformation
Result at TOSHIBA	
Acceptable M.P.Lap was dameged at end section. (LE side and RE side) Pole lap was dameged.	
Result at FNAL	

5) Magnet bus slot	
Procedure	Criteria
Check the bus slot using bus line model gauge.	The gauge shall pass the magnet bus slot.
Result at TOSHIBA	
Acceptable	
Result at FNAL	

6) Weight	
Procedure	Criteria
Measure the magnet weight.	Weight < 8500kg
Result at TOSHIBA	
8350 Kg	Acceptable
Result at FNAL	

7) Length of magnet lead, QPH wire, Voltage taps		
Procedure	Criteria	
Check the lengths of magnet lead, QPH wire, voltage taps.	1) Magnet lead : > 500mm from magnet LE end plate 2) Voltage taps wire : > 2000mm from magnet LE end plate 3) QPH wire : >2000mm from magnet LE end plate	
Result at TOSHIBA		
Measuring wire	Measured Value	Result
1) Magnet lead	500mm	Acceptable
2) Voltage taps	>2000mm	Acceptable
3) QPH wire	>2000mm	Acceptable
Result at FNAL		
Measuring wire	Measured Value	Result
1) Magnet lead		
2) Voltage taps		
3) QPH wire		

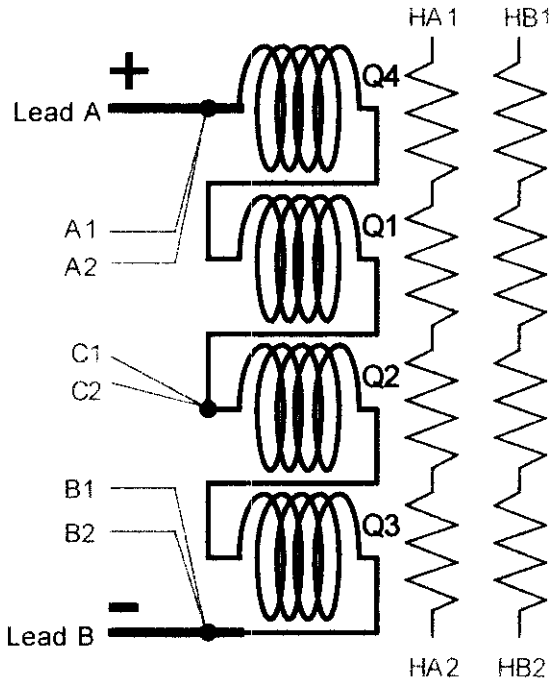

8) Cable tags	
Procedure	Criteria
Check the cable tags.	Consistent to the tag No. table.

Wiring & QPH Tag No. Table

Lead	Tag Name	Location
Voltage Tap	M1A	Tape Tape A lead
	[illegible]	Tape Tape B lead
	[illegible]	[illegible]
Quench heater	[illegible]	Heater A
	[illegible]	[illegible]

Result at TOSHIBA	
1)Voltage taps	Acceptable
2)Quench heaters	Acceptable
Result at FNAL	
1)Voltage taps	
2)Quench heaters	

3. Coil Resistance

Procedure	Criteria
Measure the magnet total resistance and coil temperature at coil current of DC1A. Calculate resistance at 20 °C; R_{20}. $R_{20}=V/I/(1+0.00393*(T_{coil}-20))$ V : Voltage between magnet leads (V) I : Coil current obtained by shut resistor (A) T_{coil} : coil temperature (°C)	1) Compare with R_{20} at TOSHIBA. Variation of R_{20} < 0.005 Ω 2) Voltage taps(C-A, C-B): Measurement Only

Result at TOSHIBA

T_{coil}	Not Reported

Magnet total voltage (V)	Current (A)	Magnet total resistance R_{20} (Ω)
Not Reported	Not Reported	6.79237

Voltage taps tag No.	V (V)	I (A)	R_{20} (Ω)	Voltage taps tag No.	V (V)	I (A)	R_{20} (Ω)
C1 - A1	Not Reported	Not Reported	3.39296	C2 - A1	Not Reported	Not Reported	3.39278
C1 - A2	Not Reported	Not Reported	3.39296	C2 - A2	Not Reported	Not Reported	3.39278
C1 - B1	Not Reported	Not Reported	3.39331	C2 - B1	Not Reported	Not Reported	3.39324
C1 - B2	Not Reported	Not Reported	3.39331	C2 - B2	Not Reported	Not Reported	3.39331

Acceptable

Result at FNAL

T_{coil}	70°

Magnet total voltage (V)	Current (A)	Magnet total resistance R_{20} (Ω)	Variation (Ω) ($R_{20\text{-TOSHIBA}}$ - $R_{20\text{-FNAL}}$)
~~6.8343~~	~~1 A~~	6.8343	

Voltage taps tag No.	R_{20} (Ω)	Voltage taps tag No.	R_{20} (Ω)
C1 - A1	3.3991	C2 - A1	3.4114
C1 - A2	3.4009	C2 - A2	3.4111
C1 - B1	3.4194	C2 - B1	3.4201
C1 - B2	3.4192	C2 - B2	2.4207

4. Instrumentations

1) Voltage taps

Procedure	Criteria
Check resistance of all voltage taps by four terminal method at 1A. Magnet lead : Q4 4th : + Magnet lead : Q3 3rd : -	Magnet lead + : A1, A2 (Pole4 Out) Magnet lead - : B1, B2 (Pole3 Out) Center taps : C1, C2 (Pole1 Out) Variation of R_{20}(A1),R_{20}(A2) : < 0.1% Variation of R_{20}(B1),R_{20}(B2) : < 0.1% Variation of R_{20}(C1),R_{20}(C2) : < 0.1%

Result at TOSHIBA

Voltage taps No.	Resistance(Ω)	Voltage taps No.	Resistance(Ω)	Variation(%)	Result
A1	0.00251	A2	0.00251	0.00	Acceptable
C1	3.39462	C2	3.39462	0.00	Acceptable
B1	6.78719	B2	6.78719	0.00	Acceptable

Result at FNAL

Voltage taps No.	Resistance(Ω)	Voltage taps No.	Resistance(Ω)	Variation(%)	Result
A1	.003	A2	.003	Ø	@.1A
C1	3.387	C2	3.387	Ø	@.1A
B1	6.778	B2	6.778	Ø	@.1A

2) QPH

Procedure	Criteria
Measure the resistance of QPH.	QPH resistance : 30 +4/-4Ω (HA,HB)

Result at TOSHIBA

QPH No.	QPH Resistance(Ω)	Result
HA	30.8	Acceptable
HB	30.8	Acceptable

Result at FNAL

QPH No.	QPH Resistance(Ω)	Result
HA	29.71	ACCEPTABLE
HB	29.69	ACCEPTABLE

5. Coil Inductance

Procedure	Criteria
Measure inductance of magnet at frequencies of 100Hz and 1kHz using LCR meter.	1) Variation of inductance Voltage taps No. C-A, inductance Voltage taps No. C-B : < 5% 2) Total inductance of the magnet :Measurement only

Result at TOSHIBA

Voltage taps tag No.	100Hz	Result (%)	1kHz	Result (%)	Voltage taps tag No.	100Hz	Result (%)	1kHz	Result (%)
C1 - A1	36.86	0.00	13.259	0.07	C2 - A1	36.86	0.00	13.259	0.07
C1 - A2	36.86		13.258		C2 - A2	36.86		13.258	
C1 - B1	36.86		13.268		C2 - B1	36.86		13.268	
C1 - B2	36.86		13.268		C2 - B2	36.86		13.268	

	100Hz	1kHz
Magnet	86.990	30.790

Acceptable

Result at FNAL

Voltage taps tag No.	100Hz	Result (%)	1kHz	Result (%)	Voltage taps tag No.	100Hz	Result (%)	1kHz	Result (%)
C1 - A1	37.07		13.335		C2 - A1	37.07		13.335	
C1 - A2	37.07		13.335		C2 - A2	37.07		13.335	
C1 - B1	37.09		13.323		C2 - B1	37.08		13.323	
C1 - B2	37.09		13.323		C2 - B2	37.08		13.323	

	100Hz	1kHz
Magnet	87.181	31.250

6. Turn to Turn Insulation

Procedure	Criteria
Apply impulse voltage of 1000V between the magnet leads and record the signal. Instrumentation: Impulse generator, recorder	Compare the signal with one at KEK. Attach rthe chart.
Result at TOSHIBA	
Acceptable	See appendix
Result at FNAL	

7. Coil Insulation

1) Insulation Resistance			
Procedure		Criteria	
Apply 1kV-DC to the coil in 1 min. and measure insulation resistance by using insulation tester. High voltage : Coils Ground : Collar, Yoke, Shell, QPH		Insulation resistance > 100MΩ	
Result at TOSHIBA			
Temperature(°C)	Humidity(%)	Insulation(MΩ)	Result
24	21	2000	Acceptable
Result at FNAL			
Temperature(°C)	Humidity(%)	Insulation(MΩ)	Result

2) Hi-pot test			
Procedure		Criteria	
Apply 3kV-DC to the coil in 1 min. and measure leak current or insulation resistance. High voltage : Coil Ground : Collar, Yoke, Shell, QPH		No break down Record leak current or resistance.	
Result at TOSHIBA			
Temperature (°C)	Humidity (%)	Leak current (mA)	Result
24	21	0.00	Acceptable
Result at FNAL			
Temperature (°C)	Humidity (%)	Leak current or resistance	Result

8. QPH Insulation

1) Insulation Resistance				
Procedure			Criteria	
Apply 1kV-DC to the QPH in 1 min. and measure insulation resistance by using insulation tester. High voltage : QPH Ground : Coil, Collar, Yoke, Shell			Insulation resistance > 100MΩ	
Result at TOSHIBA				
Heater No.	Temperature (°C)	Humidity (%)	Insulation(MΩ)	Result
HA	24	21	2000	Acceptable
HB			2000	Acceptable
Result at FNAL				
Heater No.	Temperature (°C)	Humidity (%)	Insulation(MΩ)	Result
HA				
HB				

2) Hi-pot test				
Procedure			Criteria	
Apply 3kV-DC to the QPH in 1 min. and measure leak current or insulation resistance. High voltage : QPH Ground : Coil, Collar, Yoke, Shell			No break down Record leak current or resistance.	
Result at TOSHIBA				
Heater No.	Temperature (°C)	Humidity (%)	Leak current (mA)	Result
HA	24	21	0.00	Acceptable
HB			0.00	Acceptable
Result at FNAL				
Heater No.	Temperature (°C)	Humidity (%)	Leak current or resistance	Result
HA				
HB				

9. QPH Discharge Test

1) Appearance check	
Procedure	Criteria
Check appearance of QPH wires by visual inspection.	No harmful defects or deformation.
Result at TOSHIBA	
Acceptable	
Result at FNAL	

2) QPH discharge test		
Procedure		Criteria
Charge the power supply above 850 V and fire QPHs.		No strange signal observed. Attach the chart.
Result at TOSHIBA		
HA	Acceptable	See appendix
HB	Acceptable	See appendix

3) QPH resistance				
Procedure			Criteria	
Measure resistance before/after the discharge test.			Resistance change < 10%	
Result at TOSHIBA				
QPH No.	Before (Ω)	After (Ω)	Variation (%)	Result
HA	30.8	30.8	0.0	Acceptable
HB	30.8	30.8	0.0	Acceptable
Result at FNAL				
QPH No.	Before (Ω)	After (Ω)	Variation (%)	Result
HA				
HB				

CERN
CH-1211 Geneva 23
Switzerland

the **Large Hadron Collider** project

AT MEL Document No.
LHC-MCBX-FR-0001 rev. **1.0**

EDMS Document No.

Certificate of Conformity

Part name:	MCBX Inner Triplet Dipole Corrector		
LHC Identification No.:	HCMCBX_001-SI000010	Serial No.:	**HCMCBX_001-SI000010**
Shipped To:	CERN	***Shipment No:***	***10***
		Shipment	***31/07/03***
Manufacturer:	SIGMAPHI	Contract No.:	F375/LHC/LHC
Related tech. Specification:	LHC-MCBX-CI-0001 and addenda		
Related drawings:	LHCMCBX_0012 (1525-CN-1001)		
Responsible person at CERN:	Mikko Karppinen	***Tel.***	+41 22 767 4305
		E-mail.	Mikko.Karppinen@cern.ch
Responsible person at SIGMAPHI:	Damien Neuvéglise	***Tel.***	+33 2 97 01 08 80
		E-mail.	dneuveglise@sigmaphi.fr
SIGMAPHI certifies that the delivered material conforms to the technical specification mentioned above:			
Date: 31/07/03	***Name: D.Neuvéglise***		***Signature: D.Neuvéglise***

Acceptance test results

		MCBXV (Inner)	***MCBXH (Outer)***	***Remarks:***
RT dc resistance (Ω):	***SIGMAPHI:***	***18.2***	***22.2***	
	CERN:	***17.2***	***21.2***	
	CMA[1]:	17.45	21.39	
Inductance @1 kHz/100 Hz (mH)	***SIGMAPHI:***	***66.4 / 113.65***	***68.76 / 162.8***	
	CERN	***63.1 / 84.43***	***58.98 / 98.18***	
	CMA:			
R.T. leakage current to ground @ 1.5 kV (μA):	***SIGMAPHI:***	***0.625***	***25***	
	CERN:	***0.006***	***0.01***	
	CMA:	.063μA	.063μA	

	Cold Mass Assembler
Visual inspection	
Name / Signature	
Date	

Accepted: ☑

Rejected: ☐

[1] Cold Mass Assembler

Comments (SigmaPhi):	

Comments (CERN):	***The magnetic axis of this assembly has not been measured at warm.***
	The scribe line is made relative to the dowel pin holes on the connection plate.
	During combined powering field was rotated 0-360 deg at 75 % of the nominal current @ 1.9 K.
	During individual powering the MCBXV reached 690 A and the MCBXH 635 A, however the MCBXH detrained to 548 A in the end of the training campaign.
	This magnet shall only be used for Q1.

Comments (CMA):	