Document ID: 2190

LHC Q1 LQXA Cryostat Final Assembly Traveler

333755 / Rev. None

Job No:	**248**
E + F Project/Task No.:	**300/1.1.1.6.2**
M + S Project/Task No.:	**300/1.1.1.6.2**

Place This Side Down For Scanning!!!

LQXA03-0

Document ID:

2190

Job No.:

248

Project/Task No.

300/1.1.1.6.2

Series:

LQXA

Serial No:

LQXA03

Rework ID:

0

Specification No.:

333755

Revision:

None

LQXA03-0

Fermi National Accelerator Laboratory
Batavia, IL 60510

LARGE HADRON COLLIDER
Q1-LQXA/
CRYOSTAT FINAL ASSEMBLY TRAVELER

Reference Drawing(s):
Vacuum Vessel and Cryostat Assembly (ME-390127)
Q1 Cryostat Internal Piping (ME-390174)

Project/Task Number: *300/1.1.1.6.2*

Released By: *John Szostak* | **Magnet/Device Series:** *LQXA*

Date Issued: *5/24/2004 8:18:57 AM* | **Scanned Pages:** 49

Prepared by: J. Szostak

Title	Signature	Date
TD / E&F Process Engineering	*Bob Jensen* Bob Jensen / Designee	*2/10/04*
TD / LHC Production Supervisor	*Jim Rife* Jim Rife / Designee	*2/10/04*
TD / LHC Production Engineer	*Rodger Bossert* Rodger Bossert / Designee	*2/10/04*
TD / LHC Production Engineer Cryostat	*Tom Page* Tom Page / Designee	*2/10/04*
TD / LHC Project Engineer Cryostat	*Tom Nicol* Tom Nicol / Designee	*2/10/04*
TD / LHC Program Manager	*Jim Kerby* Jim Kerby / Designee	*2/10/04*

Revision Page

Revision	Step No.	Revision Description	TRR No.	Date
None	N/A	Initial Release	N/A	2/10/04

Ensure appropriate memos and specific instructions are placed with the traveler before issuing the sub traveler binder to production.

1.0 General Notes

1.1 All steps that require a sign-off shall include the Technician/Inspectors first initial and full last name.

1.2 No erasures or white out will be permitted to any documentation. All incorrectly entered data shall be corrected by placing a single line through the error, initial and date the error before adding the correct data.

1.3 All Discrepancy Reports issued shall be recorded in the left margin next to the applicable step.

TRR# 1617 1.4 All personnel performing steps in this traveler must have documented training for this traveler and associated operating procedures.

1.5 Personnel shall perform all tasks in accordance with current applicable ES&H guidelines and those specified within the step.

1.6 Cover the product/assembly with Green Herculite (Fermi stock 1740-0100) when not being serviced or assembled.

2.0 Parts Kit List

2.1 Attach the completed Parts Kit for this production operation to this traveler. Ensure that the serial number on the Parts Kit matches the serial number of this traveler. Verify that the Parts Kit received is complete.

John J. Szostak
Process Engineering/Designee

5/24/04
Date

3.0 Vacuum Vessel Preparation and Painting

3.1 Record the Vacuum Vessel Serial Number.

Q1-7

Technician(s) Date 5/21/04

3.2 Inspect the transition area between the Support Sections and Tube Sections. Grind smooth if necessary.

Technician(s) Date 5-21-04

3.3 Clean the Vacuum Vessel (ME-390122) using a vacuum cleaner or equivalent.

Technician(s) Date 5-21-04

TRR# 1705

3.4 Leak Check the Vacuum Vessel Assembly (ME-390122) per ES-107240 and record results in table below.

Part No.		DETERMINATION OF DETECTABLE LEAK						
PART NO. ME 390122		SCALE UNITS BEFORE HELIUM PROBE	SCALE UNITS WHILE ENCLOSURE FLOODING	DETERMINATION OF MINIMUM DETECTABLE LEAK				
DATE TIME	OPERATOR'S LAST NAME			MDS = ((Response - Bckgnd) ÷ Leak Value) = MDL				
2/9/04	Jams	36	36	2	430	36	475 -8	2.41 -10

Inspector Date

3.5 Prepare the outside of the Vacuum Vessel (ME-390122) for painting. Clean using Ethyl Alcohol (Fermi stock 1920-0550) and Kimwipes (Fermi stock 1660-2500) or equivalent.

Technician(s) _____ Date 5/24/04

3.6 Mask the Stainless Steel Components of the Vacuum Vessel for painting.

Technician(s) _____ Date 5/24/04

3.7 Prime the Vacuum Vessel using Rust-o-leum (Fermi stock 1825-4000).

Technician(s) _____ Date 5/24/04

3.8 Verify that the Screws (MA-393036) will thread easily into the appropriate holes in the Vacuum Vessel (ME-390122). If necessary, tap out holes with M10 – 1.5 Tap. Move Vacuum Vessel (ME-390122) to Table.

Lead Person _____ Date 5/24/04

3.9 Paint the Vacuum Vessel using Flambeau Red (Fermi stock 1825-3710).

Technician(s) _____ Date 5/24/04

TRR# 1617 Removed All of 4.0 To Q1 Module Assy.

4.0 Suspension System

4.1 Clean the Suspension System with Ethyl Alcohol (Fermi stock 1920-0550) and Kimwipes (Fermi stock 1660-2500) or equivalent.

Part Name	Part Number	Quantity	Completed
Fixed Support Assembly	**(ME-390041)**	**1**	✓
Sliding Support Assembly	**(ME-390042)**	**1**	✓
Tie Bar Assembly	**(ME-390400)**	**2**	✓
Tie Bar Shim, 6.4mm (.250")	**(ME-390118)**	**4**	✓
Tie Bar Shim, 2.4mm (.093")	**(ME-390119)**	**4**	✓
Tie Bar Shim, 0.8mm (.031")	**(ME-390120)**	**4**	✓
Suspension System Adjusting Screw	**(MB-390039)**	**8**	✓
M16 x 70mm SHCS	**(MA-393021)**	**8**	✓
Washer (.656" ID x 1.38" OD x .13" THK STN STEEL)	**(MA-390377)**	**8**	✓

Label the IP End and the Non-IP End of the Vacuum Vessel with a temporary sticker or equivalent.

Technician(s) _____ Date 5/21/04

4.2 Insert the Fixed Support Assembly (ME-390041) into the Vacuum Vessel and position at the Non-IP End.

Technician(s) _____ Date 5.21-04

4.3 Install the Suspension System Adjusting Screws (MB-390039) and Washer (MA-390377) into the Vacuum Vessel to hold the Fixed Support Assembly in place. Coat all screw threads with Molybdenum Disulfide prior to installation.

Technician(s) _____ Date 5-21-04

4.4 Adjust the Vertical and rotational alignment of the Supports using the Suspension System Adjusting Screws (MB-390039). Ensure all four screws are in contact with the Support and that Diametrically Opposing Support Lugs are equidistant from the Vacuum Vessel Wall.

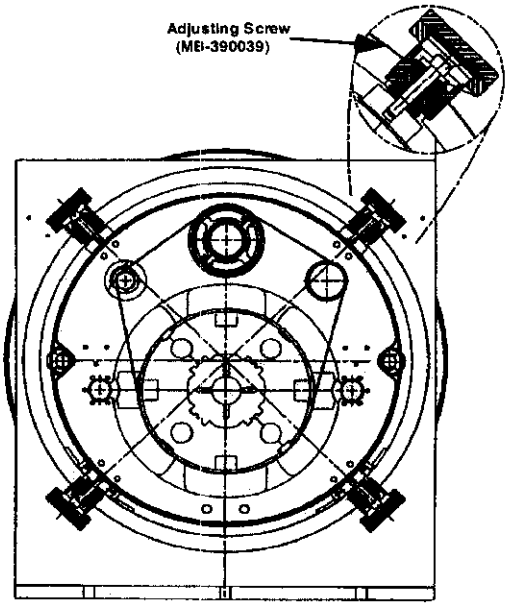

Technician(s) _____ Date 5/21/04

4.5 Insert the Sliding Support Assembly (ME-390042) in to the Vacuum Vessel and position at the IP End.

Technician(s) _____ Date 5/21/04

4.6 Install the Suspension System Adjusting Screws (MB-390039) and Washer (MA-390377) into the Vacuum Vessel to hold the Fixed Support Assembly in place. Coat all screw threads with Molybdenum disulfide prior to installation.

[redacted]

Technician(s) _____ Date 5-21-04

4.7 Adjust the Vertical and rotational alignment of the Supports using the Suspension System Adjusting Screws (MB-390039). Ensure all four screws are in contact with the Support and that Diametrically Opposing Support Lugs are equidistant from the Vacuum Vessel Wall.

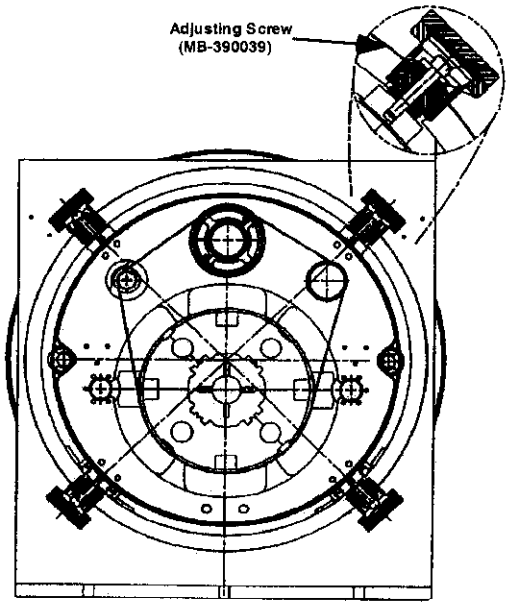

Technician(s) _____ Date 5/21/04

4.8 Assemble the Suspension System using the Fixed Support Assembly (ME-390041), the Sliding Support Assemblies (ME-390042) and the Tie Bar Assemblies (MC-390167). Insert Tie Bar Shims (MC-390118),(MB-390119) and (MB-390120) between the Sliding Support Assemblies (ME-390042) and the Tie Bar Assemblies (MC-390400) as required. (Reference drawing: ME-390525).

Technician(s) _____ Date 5-21-04

4.9 Measure the distance between the Suspension Rings at the bottom of the Threaded Rods. Install Threaded Rods after measurements.

Non-IP North to IP North _____ SW 2017 mm NW 2017 mm

Non-IP South to IP South _____ SE 1303 mm NE 1302 mm

Technician(s) _____ Date 5-24-04

4.10 Label the IP End Support and the Non-IP End Support. (Writing on the G-11 Support is acceptable).

Technician(s) _____ Date 5/24/04

4.11 Loosen each Suspension System Adjusting Screw (MB-390039) 1/2 turn and remove the Suspension System from the Vacuum Vessel.

Technician(s) _____ Date 5-24-04

4.12 Configure the Suspension Tooling for Q1 Assembly per Cryostat Layout Tooling & Assembly (ME-364604). Place Suspension Assembly on the tooling and make necessary adjustments to the tooling.

Technician(s) _____ Date 5-24-04

4.13 Assemble the Suspension Mounting Brackets (MD-390279) to the Support Assemblies.

Technician(s) _____ Date 5-24-04

4.14 Slide the Suspension System over the Cold Mass and place on tooling. The Suspension system may be disassembled during this step. Record shim sizes and locations prior to disassembly.

Note(s):

Ensure that the Suspension System is configured properly to the Cold Mass with respect to the IP and Non-IP Ends.

Technician(s) _____ Date 5-24-04

X 4.15 Verify locking collars exist only at Non-IP End support.

Lead Person _____ Date 5/25/04

4.16 Establish alignment between the Cold Mass and the Support system. Install shims between the Brass Slide Bars and the Stainless Steel Blocks on each support as needed.

Record Shim size and location below.

East-North .066 **East-South** .056

Center-North N/A **Center-South** N/A

West-North .066 **West-South** .066

Technician(s) _____ Date 5-25-04

X 4.17 Verify the Alignment of the Cold Mass and the Support System.

Crew Chief _____ Date 5/25/04

4.18 Weld the Cold Mass to the Outboard Cold Mass Brackets as per (ME-390525).

Weldor(s) _____ Date 5-25-04

5.0 Piping Assembly

Note(s):

Do not use a Strap Wrench on the Pipes.

5.1 Place the Cold Mass assembly on the insertion rail system.

C. Friangen
Technician(s)

6/5/04
Date

5.2 Clean the Pipe Supports with Ethyl Alcohol (Fermi stock 1920-0550) and Kimwipes (Fermi stock 1660-2500) or equivalent.

Technician(s)

6/5/04
Date

5.3 Install Cold Mass Insulation per Cold Mass Insulation Installation (ME-390524).

Technician(s)

6/5/04
Date

5.4 Install the Pipe Supports (MD-390092)(Qty. 3) on the Cold Mass per Q1 Cryostat Assembly Internal Piping (ME-390174).

Note(s):

A Tie Bar may be disconnected, if necessary, from the Fixed Support Assembly to install the central two pipe supports.

PIPE SUPPORT ASSEMBLY

Technician(s)

6/5/04
Date

5.5 Install Pipe Anchor (MC-390486) on the Cold Mass per Q1 Cryostat Assembly - Internal Piping (ME-390174).

Technician(s) _____ Date 6/5/04

5.6 Using Pipe Supports (MD-390092) as a template, cut the blankets around the Pipe Support Feet and slit blankets circumferentially at the Pipe Supports.

Technician(s) _____ Date 6-7-04

TRR 1617 → 5.7 Remove Pipe Supports (MD-390092) and blankets. Wrap blankets in plastic bag to keep clean for later use. Label blankets as they are removed for later positioning.

Technician(s) _____ Date 6/5/04

TRR 1617 5.8 Install Pipe Supports (MD-390092) to same location as in step 5.4.

Technician(s) _____ Date 6/7/04

5.9 Install Q1 Installation Tie Rod Assembly (MC-390638) and Tie Bar Retaining Clamp (MB-390136) as per Q1 Cryostat Assembly - Internal Piping (ME-390174).

Technician(s) _____ Date 6/7/04

5.10 Clean the Heat Exchanger Outer Shell Pipe (MD-390145), Pumping Line Pipe (MB-390147) and the Cool Down Pipe (MB-390146) with Ethyl Alcohol (Fermi stock 1920-0550) and Kimwipes (Fermi stock 1660-2500) or equivalent.

Technician(s) _____ Date 6/7/04

5.11 Slide the Heat Exchanger Outer Shell Pipe (ME-390176), Pumping Line Pipe (MB-390182) and the Cool Down Pipe (MB-390193) through all five supports.

Note(s):

Ensure the cross over hole in the Heat Exchanger Pipe is lined up with the elbow on the End Dome.

Technician(s) _____ Date 6/7/04

DMC 5.12 Clean the Pumping Line End Flange (MB-390032), the Cool Down Line End Flange (MB-390033) and the Heat Exchanger Outer Shell Flange (MB-390031) with Ethyl Alcohol (Fermi stock 1920-0550) and Kimwipes (Fermi stock 1660-2500) or equivalent.

Technician(s) _____ Date 6-17-04

WELD FLANGE FOR PRESSURE CHECK

WELDER _____ DATE 6/9/04

5.13 Weld the Heat Exchanger Outer Shell Flange (MB-390031), the Pumping Line End Flange (MB-390032) and the Cool Down Line End Flange (MB-390033) to the ends of the corresponding pipes.

Weldor(s) _____ Date 6/8/04

5.14 Clean the Cold Mass and the Retainer Clips (MA-390103) with Ethyl Alcohol (Fermi stock 1920-0550) and Kimwipes (Fermi stock 1660-2500) or equivalent.

Technician(s) _____ Date 6/7/04

TRR# ~~[illegible]~~ 1617

5.15 Weld the Retainer Clips (MA-390103) to the Cold Mass Outer Shell as per ~~the Q2 Pipe Support Assembly (ME-390082) or~~ Q1 Internal Piping Assembly (ME-390174).

Weldor(s) _____ Date 6/7/04

5.16 Position the End Dome Elbow, the Weld Adapter (MC-390278) and the Heat Exchanger Outer Shell.

Technician(s) _____ Date 6/8/04

5.17 Weld the Outer Shell to the Weld Adapter (MC-390278).

Weldor _____ Date 6/9/04

5.18 Weld the End Dome Elbow to the Weld Adapter (MC-390278).

Weldor _____ Date 6/9/04

TRR#1617

AA 5.19 Assemble the Corrugated Tube Assembly (ME-390179).

Technician(s) _____ Date 6/9/04

AA 5.20 Insert the Corrugated Tube Assembly (ME-390179).

Technician(s) _____ Date 6/9/04

5.21 Position the Heat Exchanger End Plate (MD-390178).

Technician(s) _____ Date 6/9/04

5.22 Weld the Heat Exchanger End Plate (MD-390178) to the Outer Shell Pipe (MD-390177).

Weldor _____ Date 6/9/04

New step — Position the corrugated tube Assembly.

TRR# 1617

5.23 Weld the Corrugated Tube Assembly (ME-390179) to the Heat Exchanger End Plate (MD-390178).

Weldor — Date: 6/9/04

5.24 Position the Q1 Pumping Line Pipe (MB-390183).

Technician(s) — Date: 6/9/04

5.25 Weld the Q1 Pumping Line Pipe (MB-390183) to the Heat Exchanger Corrugated Tube (ME-390179).

Weldor — Date: 6/9/04

move to After 5.21

5.26 Position the Cooldown Line (MC-390193).

Technician(s) — Date: 6-11-04

move to after "weld end dome elbow to weld adapter"

5.27 Weld the Cooldown Line (MC-390193).

Weldor — Date: 6/11/04

5.28 Weld the Q1 Cooldown Line (MC-390193), ~~Q1 Pumping Line (ME-390182)~~ and Heat Exchanger Outer Shell (ME-390175) to the Pipe Anchor (MC-390486).

Weldor(s) — Date: 6/9/04

5.29 Weld Pumping Line End Flange (MA-390032) to the Pumping Line Pipe (MD-390183).

Weldor(s) — Date: 6/11/04

5.30 Weld Cool Down Line End Flange (MA-390033) to the Cooling Line Pipe (MD-390146).

Weldor(s) — Date: 6/11/04

5.31 Insert 4.5k Intercept Line Pipes (MB-390192) per (ME-390208).

Technician(s) — Date: 6-11-04

5.32 Weld the Pipe Anchor (MC-390486) to the Cold Mass Skin.

Weldor — Date: 6/9/04

5.33 Weld the fixed collar to the 4.5k Intercept Line (MB-390192) per (ME-390208).

Chandler Scott — Weldor(s) 6-12-04 — Date

5.34 Pressure test the Cold Mass Assembly at 375 psi Nitrogen per Section 5034 of the Fermilab ES&H Manual and UG-100 of the Code.

Warning:

The test is to be performed after normal working hours and only personnel directly involved with the test will be present.

Inspector 6-12-04 — Date

5.35 Leak Check the Cold Mass Assembly. (This will include the Outer Shell Pipe (MD-390177)).

Part No.	DETERMINATION OF DETECTABLE LEAK						
	M.D.S. ÷ ((Response – Background) ÷ Leak value) = MDL						
OPERATOR'S LAST NAME	SCALE UNITS BEFORE HELIUM PROBE	SCALE UNITS WHILE ENCLOSURE FLOODING	MDS	Response	Background	Leak Value	MDL
GAW	58x1	58x1	2	30x5	58x1	3.85 xE-8	8.1 xE-10

Inspector 6-18-04 — Date

5.36 Leak check 4.5k Intercept Lines (MB-390192).

Part No.	DETERMINATION OF DETECTABLE LEAK						
	M.D.S. ÷ ((Response – Background) ÷ Leak value) = MDL						
OPERATOR'S LAST NAME	SCALE UNITS BEFORE HELIUM PROBE	SCALE UNITS WHILE ENCLOSURE FLOODING	MDS	Response	Background	Leak Value	MDL
G Dee	40x1	40x1	2	30x5	40x1	3.85 x10-8 xE-8	7.0 xE-10

Inspector 6-18-04 — Date

6.0 Shield Assembly

6.1 Lift the Cold Mass Assembly and place the IP End (ME-390433) and Non-IP End (ME-390434) on the Insertion Rails. Lower the Cold Mass back onto the rails ensuring the holes in the Shield Sections line up with Support Rollers.

Technician(s) _____ Date 7-7-04

6.2 Insert the Mid Section (ME-390435) and the Support Bands (MD-390083).

Technician(s) _____ Date 7-7-04

6.3 Assemble the bottom half of the shield. Leave all bolts loose. Spray all screw threads with Molybdenum.

Technician(s) _____ Date 7-7-04

6.4 Assemble the Cooling Tubes (MD-390431) to the Bottom Half of the Shield.

Technician(s) _____ Date 7-7-04

6.5 Lift the Cold Mass and place the Shield Inner and Outer MLI Blankets (ME-390487 & ME-390488) onto the Insertion Rails in the correct orientation.

Note(s):

Place the Outer Blanket (ME-390314) on the Rails first.

Technician(s) _____ Date 7-7-04

STEP 6.13 W FLAGS

PART NO. LQXA03-0 (Y OVER W FLAGS)		SCALE UNITS BEFORE HELIUM PROBE	SCALE UNITS WHILE ENCLOSURE FLOODING	DETERMINATION OF MINIMUM DETECTABLE LEAK				
DATE / TIME	OPERATOR'S LAST NAME			MDS	÷ ((Response	- Bckgnd)	÷ Leak Value)	= MDL
8-31-04	G Au	24ft	24ft	2	42x5	24ft	3.85x10^-8	3.2x10^-10

6.6 Lower the Cold Mass onto the rails. Ensure the slits in the blankets line up with Support Rollers.

Technician(s) _____ Date 7-7-04

6.7 Install the Cold Mass MLI Blankets per (ME-390524) and in the same position as Step 5.6.

Technician(s) _____ Date 7-7-04

6.8 Install the Cold Mass Insulation Mounting Lug Covers (MC-390496).

Technician(s) _____ Date 7-8-04

6.9 Cut and install the pipe MLI blankets per Q1 Piping Insulation (ME-390541).

Technician(s) _____ Date 7-8-04

6.10 Install the Upper Shield per Q1 Thermal Shield Assembly (ME-390429). Spray all screw threads with Molybdenum.

Technician(s) _____ Date 7-8-04

TRR# Added 1617 6.11 Install the Shield Blankets (ME-390487 & ME-390488). Cutouts will have to be made for the Upper Support Lugs.

Technician(s) _____ Date 7-8-04

TRR# Added 1617 6.12 12 WELD ON PARS COOLING PIPE CROSSOVER (MD-390466)

Added 6.13 LEAK TEST OK! MDL=3.65E-10

7-9-04

7.0 Cold Mass Insertion into the Vacuum Vessel

7.1 Install Green Putty between the Vacuum Vessel and the Insertion Rails.

Technician(s) _____ Date 7-8-04

7.2 Install the Cold Mass Pull-in Tooling.

Technician(s) _____ Date 7-8-04

7.3 Mount the Pneumatic Winch to floor on the West side of the Vacuum Vessel.

Technician(s) _____ Date 7-8-04

7.4 Connect the cable to the Pull-in Tooling.

Technician(s) _____ Date 7-8-04

7.5 Pull the Cold Mass Assembly into the Vacuum Vessel.

Technician(s) _____ Date 7-8-04

7.6 When the Cold Mass is fully inserted, install the Suspension System Adjusting Screws (MB-390039).

Technician(s) _____ Date 7-8-04

7.7 Adjust the Suspension System Adjusting Screw (MB-390039) as needed to center the Cold Mass in the Vacuum Vessel.

Technician(s) _____ Date 7-8-04

See TRR# 1617

Added 7.8

Added 7.9

Added 7.10

8.0 Final Electrical Inspection

8.1 Perform an electrical inspection on each of the Individual Quadrants and the Cold Mass. Refer to the Valhalla and Leader Free Standing Coil Measurement Procedure (ES-292306).

To measure the Resistance of a Q1 Cold Mass:

1. Use Valhalla Scientific 4300B digital micro-ohmmeter.
2. Set Test Current to 1 amp.
3. Set Scale to 2V full scale.
4. Turn temperature compensation on.
5. Turn test current off.
6. Connect I_{HI} to Q4 inner power lead as shown in figure.
7. Connect I_{LO} to Q3 inner power lead as shown in figure.
8. Turn test current on.
9. Connect V_{HI} and V_{LO} to voltage taps as shown in resistance table.
10. To measure Total with leads, connect V_{HI} to Q4 power lead and V_{LO} to Q3 power lead.
11. Read resistance and record in traveler.

Q1 Cold Mass Electrical Measurements

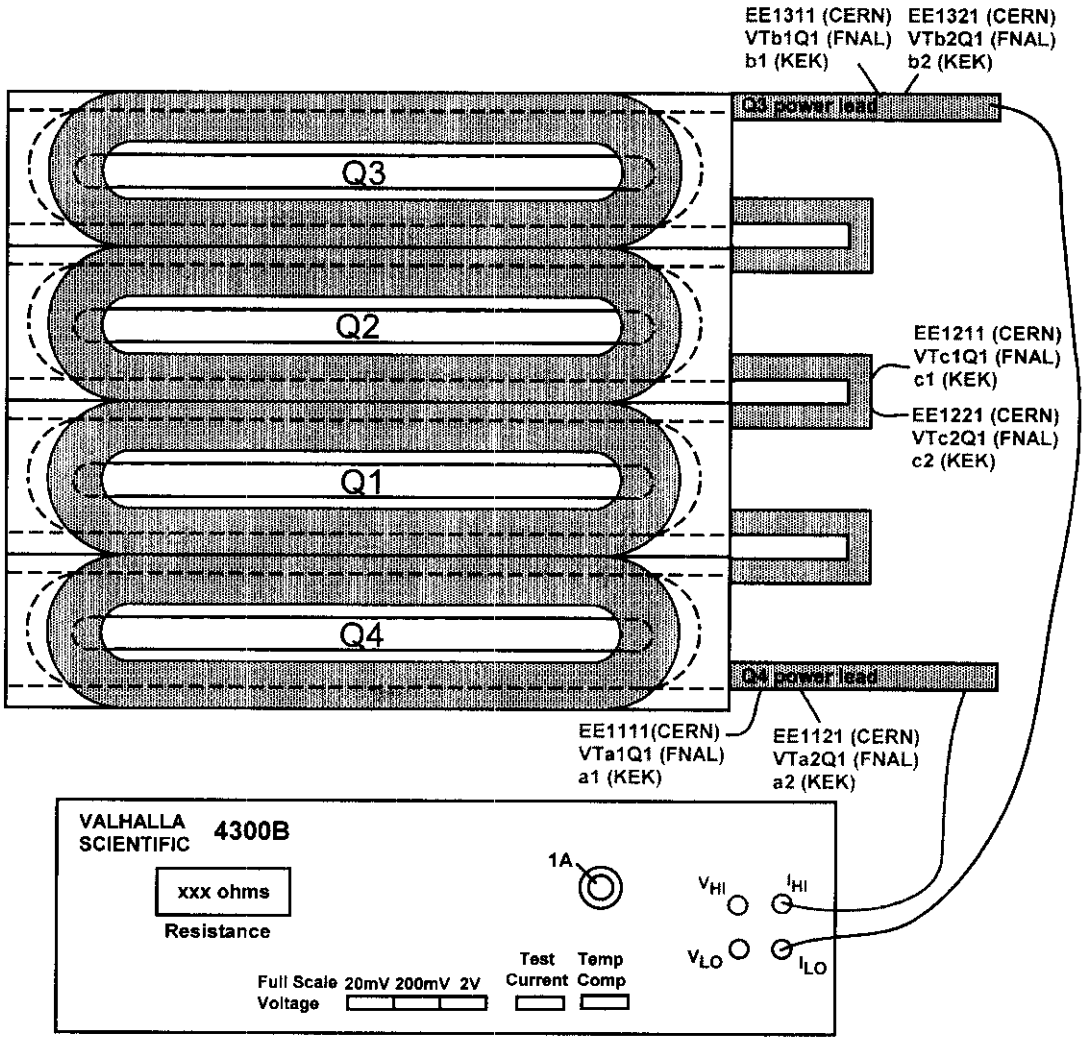

(Q1) Resistance				Nominal to Ω
Voltage Tap Serial Numbers				Total Resistance
Connect	Fermi	CERN	KEK	
V_{HI}	VTa1Q1	EE1111	a1	.3441 Ω
V_{LO}	VTc1Q1	EE1211	c1	
V_{HI}	VTc1Q1	EE1211	c1	.3442 Ω
V_{LO}	VTb1Q1	EE1311	b1	
V_{HI}	VTa1Q1	EE1111	a1	6.882 Ω
V_{LO}	VTb1Q1	EE1311	b1	
				Total Resistance with Leads
V_{HI}	Q4 Power Lead			1.888 Ω
V_{LO}	Q3 Power Lead			

Technician(s) 7-9-04 Date

Check resistance of Redundant Voltage Taps.

Q1 Redundant Voltage Taps				
Connect	Fermi	CERN	KEK	Resistance
V_{HI}	VTa2Q1	EE1121	a2	6888 Ω
V_{LO}	VTc2Q1	EE1221	c2	
V_{HI}	VTc2Q1	EE1221	c2	6888 Ω
V_{LO}	VTb2Q1	EE1321	b2	

Technician(s) 7-9-04 Date

To measure Ls and Q of a Q1 Cold Mass:

1. Use Hewlett Packard HP4284A digital LCR meter.
2. Turn line switch to on. The words "Measurement Display" should now be highlighted in the upper left corner of the display screen.
3. Use cursor buttons (shown in figure with arrows) to toggle down until "function" is highlighted near the upper left corner of the display screen.
4. Push the lowest of the five buttons to the right of display 3 times. (this button is shaded gray in the figure) The line in the display screen next to the second button down should now read "Ls-Q" and "function" near the upper left corner of the display should have the option "Ls-Q" chosen.
5. Scroll to "integer" using the cursor buttons. "Integer" will have the option "medium" chosen.
6. Press the 3rd button of five. The word "medium" should change to "long".
7. Connect H_{cur} to Q4 power lead as shown in figure.
8. Connect L_{cur} to Q3 power lead as shown in figure.
9. Connect H_{pot} and L_{pot} to voltage taps as shown in table.
10. Read Ls and Q from display and record in traveler.

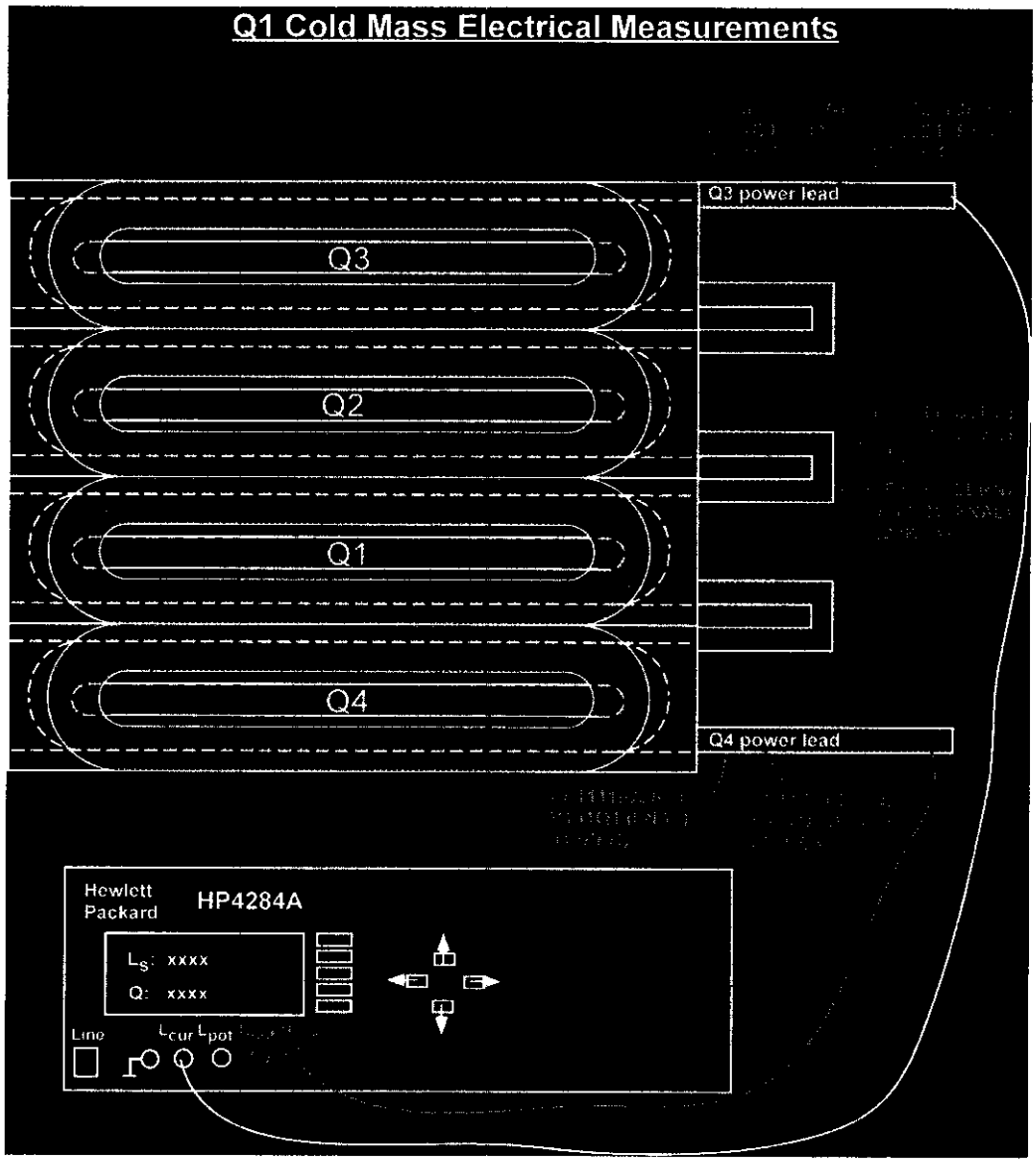

(Q1) Inductance				Nominal ~ to mH
Voltage Tap Serial Numbers				Total Inductance
Connect	Fermi	CERN	KEK	
H_{POT}	VTa1Q1	EE1111	a1	15.409 mH
L_{POT}	VTc1Q1	EE1211	c1	
H_{POT}	VTc1Q1	EE1211	c1	15.412 mH
L_{POT}	VTb1Q1	EE1311	b1	

H_{POT}	VTa1Q1	EE1111	a1	30.815 H
L_{POT}	VTb1Q1	EE1311	b1	

(Q1) Q-Factor				Nominal ~ to
Voltage Tap Serial Numbers				Total Q
Connect	Fermi	CERN	KEK	
H_{POT}	VTa1Q1	EE1111	a1	1.1
L_{POT}	VTc1Q1	EE1211	c1	
H_{POT}	VTc1Q1	EE1211	c1	1.1
L_{POT}	VTb1Q1	EE1311	b1	

H_{POT}	VTa1Q1	EE1111	a1	1.1
L_{POT}	VTb1Q1	EE1311	b1	

Technician(s) _____ Date 7-9-04

To measure the resistance of a Thermometer (RTD):

1. Use Hewlett Packard HP3457A digital multimeter.
2. Record temperature of building within +/- 5 degrees.
3. Press line button to turn line on.
4. Connect wires as shown in Figure below.
   U+ (Black) to Sense HI
   I+ (Yellow) to Input HI
   U- (Red) to Sense LO
   I- (Green) to Input LO
5. Push blue button (function key) once.
6. Push OHMF button.
7. Verify arrow in readout is above the 4WΩ (meaning a 4 wire resistance measurement).
8. Read resistance in ohms and record in traveler.

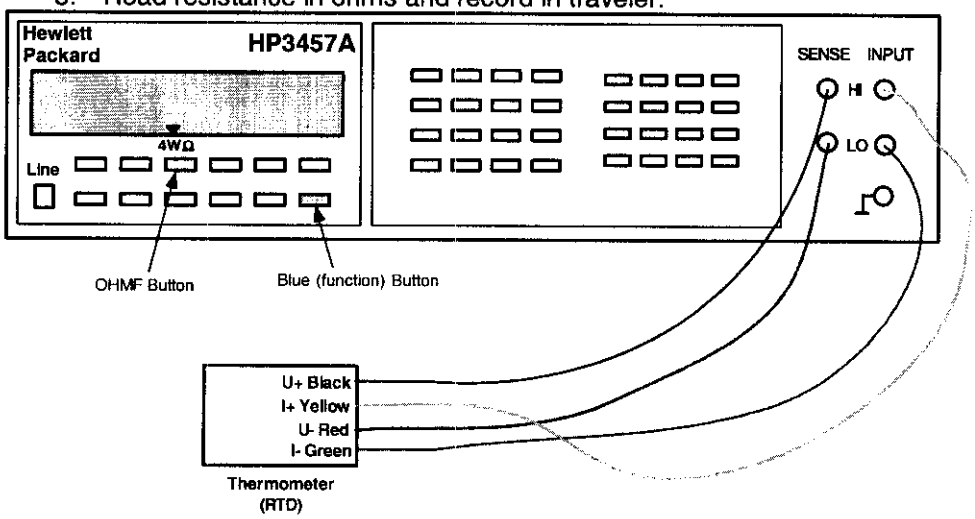

To measure the resistance of a Cryogenic (Warm-up) Heater

1. Use Hewlett Packard HP3457A digital multimeter.
2. Record temperature of building within +/- 5 degrees.
3. Press line button to turn line on.
4. Connect wires as shown in Figure below.
5. Push blue button (function key) once.
6. Push OHMF button.
7. Verify arrow in readout is above the 4WΩ (meaning a 4 wire resistance measurement).
   Note: Although this is technically a 4 wire measurement, it is effectively a 2 wire measurement, since there are only 2 wires connected to each heater.
8. Read resistance in ohms and record in traveler.

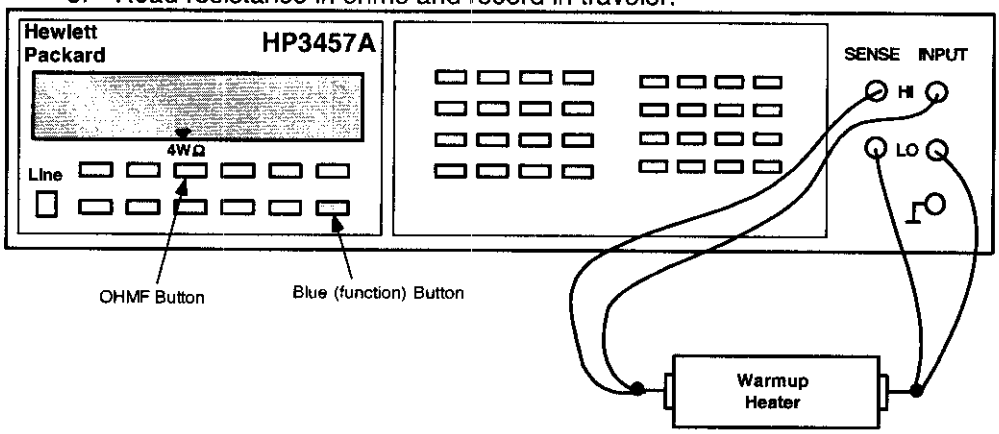

Q1 - RTD's and Cryogenic (warm-up) Heaters			
Component	**Fermi**	**CERN**	**Resistance**
Q1 RTD, primary	TaQ1	TT8311	60.004 Ω
Q1 RTD, redundant	TbQ1	TT8321	68.01 Ω
Q1 Cryogenic (warm-up) Heater (LE) - wire at top (CERN #1 I+)	W1aQ1	EH8311+	17.61 Ω
Q1 Cryogenic (warm-up) Heater (LE) - wire at bottom (CERN #1 I-)	W2aQ1	EH8311-	
Q1 Cryogenic (warm-up) Heater (Non-LE) - wire at top (CERN #2 I+)	W1bQ1	EH8321+	18.02 Ω
Q1 Cryogenic (warm-up) Heater (Non-LE) - wire at bottom (CERN #2 I-)	W2bQ1	EH8321-	

Technician(s) 7-9-04 Date

Using the Hewlett Packard HP3457A digital multimeter, measure the Protection (Strip) Heater Resistance for Q1.

Q1 Protection (Strip) Heater Resistance					
Fermi	**CERN**	**KEK**	**Description**	**Limit**	**Resistance**
H1aQ1	**YT1111+**	**HA1**	**Circuit A**	Ω	32.03 Ω
H2aQ1	**YT1111-**	**HA2**			
H1bQ1	**YT1121+**	**HB1**	**Circuit B**	Ω	32.04 Ω
H2bQ1	**YT1121-**	**HB2**			

Technician(s) 7-9-04 Date

TRR# 1692

8.2 Using the HP4284A, connect power thru the corrector Power Leads (HA1 and HB1 to measure Q1-H1 or VA1 and VB1 to measure Q1-V1). Connect the Sense Leads as shown in table below and record resistance.

MCBX Corrector Coil Taps			
Component	**FermiLab Label**	**CERN Label**	**Resistance**
Q1-H1	**VTH1**	**EE8121**	21.003 Ω
	HA1	**N/A**	
Q1-V1	**VTV1**	**EE8111**	20.003 Ω
	VA1	**N/A**	

Technician(s) _____ Date 7-9-04

WE NEED A PICTURE OF THE CORRECTOR WIRE HERE AS A REFERENCE.

TRR #1617
New step 9.0

9.0 Production Complete

9.1 Process Engineering verify that the LHC Cryostat Assembly Traveler (5520-TR-333755) is accurate and complete. This shall include a review of all steps to ensure that all operations have been completed and signed off. Ensure that all Discrepancy Reports, Nonconformance Reports, Repair/Rework Forms, Deviation Index and dispositions have been reviewed by the Responsible Authority for conformance before being approved.

Comments:

J. Spostak
Process Engineering/Designee

APR 1 2 2005
Date

TRR NEEDED AFTER 8.2!
JOE DIMARCO STRETCH WIRE TEST NEEDS TO BE ADDED & TED BRAKES
LASER TRACKER TUBE ALIGNMENT ALSO NEEDS TO BE ADDED HERE
S. GOULD
10/1/04

TRR# 1705

9.0 Final Preparations

9.1 Prepare the Power Leads to be cut by measuring and marking the appropriate cutoff location as per Q1 Module Assembly (ME-369894). Remove any Kapton insulation from the end of the lead to approximately 4 inches beyond the cutoff mark. Clamp the Leads, individually, using the "Lead Clamp Block Tooling".

O. Friar — 7 15 04
Technician(s) — Date

9.2 Cut the Power Leads as per Q1 Module Assembly (ME-369894).

O. Friar — 7 15 04
Technician(s) — Date

9.3 Fuse the Ends of the Leads.

William Garfield — 7-15-04
Weldor(s) — Date

9.4 Remove Clamps when fusing is complete and it is safe to do so.

O. Friar — 7-19-04
Technician(s) — Date

TRR#1705
DR#
HGQ-0500

9.5 Install the Vinyl Flange Covers (MA-390491), (MA-390492), (MA-390493), (MA-390494), & the Alignment Fiducial Covers (MA-390495).

Technician(s) — Date

MOVE TO SHIPPING TRAVELER IF YOU CAN!

ALSO ADD STRETCH WIRE & TUBE ALIGNMENT HERE & SIGN-OFFS SNG 10/28/04

TRR ADD HELIUM PRESS. TEST HERE! SNG 10/28/04

LEAD END BELLOWS W/ HYPERTRONICS IN IT.

PART NO. LQXA0003-0 MSLD#30521		SCALE UNITS BEFORE HELIUM PROBE	SCALE UNITS WHILE ENCLOSURE FLOODING	DETERMINATION OF MINIMUM DETECTABLE LEAK				
DATE / TIME	OPERATOR'S LAST NAME			MDS ÷ ((Response - Bckgnd) ÷ Leak Value) = MDL				
FINAL	D. Gau	40X1	40X1	2	40X5	40	4.75×10^{-8}	5.9×10^{-10}

TD - Engineering Fabrication Component Kit List

ORIGINAL

Process Engineering

Component Serial No. LQXA03

Kit submitted by: John Szostak Ext. 2003

Fermi ID No. 02943C

Date submitted: 25-Mar-04

Need date: 9-Apr-04

Deliver to: ICB

Use with Traveler No. 333755

Job No. 248

M&S task number: 300 1.1.1.3.4

Drawing Title: Q1 CRYOSTAT GENERAL ASSEMBLY

Drawing No. ME-390127 Rev. E

Drawing Title: Q1 CRYOSTAT ASSEMBLY - INTERNAL PIPING

Drawing No. ME-390174 Rev. B

Drawing Title: *Q1 SUSPENSION SYSTEM INSTALLATION*

Drawing No. *ME-390525* *Rev. **

Material Control

Parts available

Verified by: M. Schmidt

Fermi ID No. 4223

Date submitted to stockroom: 30-Mar-04

Parts issued

Issued by: [illegible]

Fermi ID No. 1955

Date issued: 4/09/04

Parts received by E&F: John Szostak

Fermi ID No. 02943C

Date received by E&F: 4/9/04

	Description	Dwg Size	Number	Rev	Unit	Quantity Required	Location	Quantity Issued	E&F Verified	Routing Form Number	Spares Number / Comment
1	CORRUGATED TUBE SUPPORT	MC	390028	*	EA	6	R9,S1,L4	6	✓	77647	91 pcs.
2	CORRUGATED TUBE RESTRICTOR	MC	390029	*	EA	1	R9,S1,L4	1	✓	77724	58 pcs.
3	END FLANGE	MC	390031	B	EA	1	IB4 Bin	1	✓	77209	59 pcs.
4	PUMPING LINE END FLANGE	MC	390032	B	EA	1	IB4 Bin	1	✓	77210	66 pcs.
5	COOLDOWN LINE END FLANGE	MB	390033	B	EA	1	IB4 Bin	1	✓	77208	50 pcs.
6	ADJUSTING SCREW	MB	390039	C	EA	8	IB4 Bin	8	✓	81148	131 pcs.
7	*SUSPENSION SYSTEM SUPPORT RING ASSEMBLY*	*ME*	*390043*	*B*	*EA*	*1*	NT02407	1	✓	76906	2 pcs.
8	*SUSPENSION SYSTEM SUPPORT RING ASSEMBLY*	*ME*	*390043*	*B*	*EA*	*1*	NT02407	1	✓	76906	2 pcs.
9	*SUSPENSION SYSTEM SUPPORT PIN*	*MB*	*390047*	*A*	*EA*	*2*	R8,S2,L1	2	✓	76914	94 pcs.

TD - Engineering Fabrication Component Kit List

ORIGINAL

	Description	Dwg Size	Number	Rev	Unit	Quantity Required	Location	Quantity Issued	E&F Verified	Routing Form Number	Spares Number / Comment
10	*SUSPENSION SYSTEM SUPPORT PIN*	*MB*	*390047*	*A*	*EA*	*4*	R8,S2,L1	4	✓	76914	94 pcs.
11	SUPPORT BAND	ME	390083	A	EA	4	P/N	4	✓	77146	96 pcs.
12	RETAINER	MA	390086	*	EA	16	IB4 Bin	16	✓	77131	338 pcs.
13	Q1 - Q3 PIPE SUPPORT ASSEMBLY	MD	390092	A	EA	3	P/N	3	✓	76617	48 pcs.
14	*TIE BAR SHIM, 6.4 mm*	*MB*	*390118*	*	*EA*	*4*	IB4 Bin	4	✓	77204	39 pcs.
15	*TIE BAR SHIM, 2.4 mm*	*MB*	*390119*	*	*EA*	*4*	IB4 Bin	4	✓	77203	38 pcs.
16	*TIE BAR SHIM, 0.8 mm*	*MB*	*390120*	*	*EA*	*4*	IB4 Bin	4	✓	77202	38 pcs.
17	VACUUM VESSEL ASSEMBLY	ME	390122	E		ICB HAS					
18	TIE BAR RETAINING CLAMP	MB	390136	*	EA	4	IB4 Bin	4	✓	77132	93 pcs.
19	OUTER SHELL PIPE	MD	390177	*	EA	1	P/N	1	✓	79998	7 pcs.
20	END PLATE	MB	390178	*	EA	1	R1,2,3	1	✓	79644	16 pcs.
21	Q1 PUMPING LINE PIPE	MB	390183	*	EA	1	P/N	1	✓		7 pcs.
22	Q1 PUMPING LINE RETURN FITTING	MC	390184	*	EA	1	R7,3,2	1	✓	80036	8 pcs.
23	Q1 IP END COLLECTION POT WELDMENT	ME	390185	*	EA	1	R7,3,2	1	✓	79584	7 pcs.
24	Q1 4.5K INTERCEPT LINE TUBE	MB	390192	*	EA	3	IB4	3	✓	81302	21 pcs.
25	Q1 COOLDOWN LINE WELDMENT	MC	390193	A	EA	1	P/N	1	✓	80001	7 pcs.
26	TARGET HOLDER	MD	390211	B	EA	4	R10,1,1	4	✓	74751	80 pcs.
27	*SUSPENSION SYSTEM SUPPORT PIN SHIM - 1mm*	*MA*	*390275*	*A*	*EA*	*8*	IB4 Bin	8	✓	76911	108 pcs.
28	*SUSPENSION SYSTEM SUPPORT PIN SHIM - 1mm*	*MA*	*390275*	*A*	*EA*	*16*	IB4 Bin	16	✓	76911	108 pcs.

TD - Engineering Fabrication Component Kit List

ORIGINAL

	Description	Dwg Size	Number	Rev	Unit	Quantity Required	Location	Quantity Issued	E&F Verified	Routing Form Number	Spares Number / Comment
29	*SUSPENSION SYSTEM SUPPORT PIN SHIM - 0.5mm*	*MA*	*390276*	*	*EA*	*8*	IB4 Bin	8	✓	76910	120 pcs.
30	*SUSPENSION SYSTEM SUPPORT PIN SHIM - 0.5mm*	*MA*	*390276*	*	*EA*	*16*	IB4 Bin	16	✓	76910	120 pcs.
31	*SUSPENSION SYSTEM SUPPORT PIN BOLTS*	*MA*	*390277*	*	*EA*	*8*	IB4 Bin	8	✓	81171	368 pcs.
32	*SUSPENSION SYSTEM SUPPORT PIN BOLTS*	*MA*	*390277*	*	*EA*	*16*	IB4 Bin	16	✓	81171	368 pcs.
33	WELD CONNECTOR ADAPTER	MC	390278	*	EA	1	R1,S1,L3	1	✓	79471	16 pcs.
34	*SUSPENSION MTG BRACKET*	*MD*	*390279*	*	*EA*	*4*	R9,S1,L1	4	✓	77180	64 pcs.
35	COOLING PIPE BRACKET	MB	390316	A	EA	4	IB4 Bin	4	✓	77195	80 pcs.
36	COOLING PIPE CLAMP	MB	390317	*	EA	8	IB4 Bin	8	✓	77196	167 pcs.
37	*TWO PIECE CLAMP ON COLLAR*	*MA*	*390321*	*A*	*EA*	*4*	IB4 Bin	4	✓	76912	80 pcs.
38	ALUMINUM SPACER	MA	390373	*	EA	32	IB4 Bin	32	✓	76874	880 pcs.
39	Blank Non-Rotatable Conflat Flange, 4.62" OD 304 SS	MA	390374	*	EA	8	R8,3,4	8	✓	81304	176 pcs.
40	COPPER GASKET	MA	390375	*	EA	8	IB4 Bin	8	✓	81280	187 pcs.
41	BOLT SET, HEX HEAD, 5/16 - 24 x 1.25 w/ WASHER	MA	390376	*	EA	80	IB4 Bin	80	✓	72306	1764 pcs.
42	WASHER .656" ID x 1.38" OD x .13" THK, STN STEEL	MA	390377	*	EA	8	IB4 Bin	8	✓	77866	179 pcs.
43	RETAINING WASHER	MA	390378	*	EA	232	IB4 Bin	232	✓	76875	5596 pcs.
44	INTERCEPT LINE PIPE STOP	MA	390379	A	EA	6	IB4 Bin	6	✓	78894	181 pcs.
45	CORRUGATED TUBE WELDMENT	ME	390393	*	EA	1	P/N	1	✓	79282	7 pcs.
46	*Q1 / Q3 TIE BAR ASSEMBLY*	*MC*	*390400*	*	*EA*	*2*	P/N	2	✓	77976	32 pcs.
47	REFERENCE SOCKET CUP (Furnished by CERN)	MA	390426	*	EA	8	R1,3,5	8	✓	77884	184 pcs.

TD - Engineering Fabrication Component Kit List

ORIGINAL

	Description	Dwg Size	Number	Rev	Unit	Quantity Required	Location	Quantity Issued	E&F Verified	Routing Form Number	Spares Number / Comment
48	COOLING TUBE WELDMENT	MD	390431	A	EA	2	P/N	2	✓	79280	14 pcs.
49	IP END SECTION	ME	390433	*	EA	2	Site 38	2	✓	79621	14 pcs.
50	NON-IP END SECTION	ME	390434	*	EA	2	P/N	2	✓	79611	14 pcs.
51	Q1 - Q3 CENTER SECTION	ME	390435	*	EA	2	P/N	2	✓	79383	32 pcs.
52	COOLING PIPE CROSSOVER	MD	390466	A	EA	1	R8,S1,L2	1	✓	79201	7 pcs.
53	COOLING PIPE CROSSOVER CONNECTOR	MA	390467	*	EA	2	IB4 Bin	2	✓	789-30	14 pcs.
54	*SUSPENSION SYSTEM SUPPORT PIN SHIM 0.13 mm*	*MA*	*390480*	*	*EA*	*8*	R2,S2,L4	8	✓	79121	361 pcs.
55	*SUSPENSION SYSTEM SUPPORT PIN SHIM 0.13 mm*	*MA*	*390480*	*	*EA*	*16*	R2,S2,L4	16	✓	79121	361 pcs.
56	*SUSPENSION SYSTEM SUPPORT SHIM 0.25 mm*	*MA*	*390481*	*	*EA*	*12*	R2,S2,L4	12	✓	79122	549 pcs.
57	*SUSPENSION SYSTEM SUPPORT SHIM 0.25 mm*	*MA*	*390481*	*	*EA*	*24*	R2,S2,L4	24	✓	79122	549 pcs.
58	Q1 / Q3 PIPE ANCHOR	MC	390486	*	EA	1	R8,S1,L4	1	✓	79387	16 pcs.
59	Q1 SHIELD MLI INNER BLANKET	ME	390487	*	EA	1	Site 38	1	✓	79869	7 pcs.
60	Q1 SHIELD MLI OUTER BLANKET	ME	390488	*	EA	1	Site 38	1	✓	79870	7 pcs.
61	VINYL FLANGE COVER FOR 75 MM FLANGE	MA	390491	*	EA	1	IB4 Bin	1	✓	78835	236 pcs.
62	VINYL FLANGE COVER FOR 114 MM FLANGE	MA	390492	*	EA	3	IB4 Bin	3	✓	78836	230 pcs.
63	VINYL FLANGE COVER FOR 134 MM FLANGE	MA	390493	*	EA	4	IB4 Bin	4	✓	78837	322 pcs.
64	VINYL FLANGE COVER FOR 201 MM FLANGE	MA	390494	*	EA	1	IB4 Bin	1	✓	78834	96 pcs.
65	ALIGNMENT FIDUCIAL COVER	MA	390495	*	EA	8	IB4 Bin	8	✓	78957	274 pcs.
66	*Q1/Q3 COLD MASS END BLANKET*	*ME*	*390521*	*	*EA*	*1*	Site 38	1	✓	79874	25 pcs.

TD - Engineering Fabrication Component Kit List

ORIGINAL

	Description	Dwg Size	Number	Rev	Unit	Quantity Required	Location	Quantity Issued	E&F Verified	Routing Form Number	Spares Number / Comment
67	*Q1/Q3 COLD MASS MID BLANKET*	*ME*	*390522*	*	*EA*	*1*	**Site 38**	1	✓	79875	16 pcs.
68	*Q1 INSULATION, COLD MASS IP END BLANKET*	*ME*	*390523*	*	*EA*	*1*	**Site 38**	1	✓	79876	9 pcs.
69	*Q1 COLD MASS WELDED ASSEMBLY*	*ME*	*390526*	*C*		*ICB HAS*					
70	*SHIELDING BLOCK*	*MB*	*390534*	*A*	*EA*	*2*	R7,1,3	2	✓	79509	14 pcs.
71	TARGET HOLDER, RIGHT	MD	390539	*	EA	2	R8,S1,L5	2	✓	79556	45 pcs.
72	TARGET HOLDER, LEFT	MD	390540	*	EA	2	R8,S1,L5	2	✓	79555	45 pcs.
73	Q1 / Q3 MLI END BLANKET	ME	390542	*	EA	1	Site 38	1	✓	79877	25 pcs.
74	Q1 / Q3 MLI MID BLANKET	ME	390543	*	EA	1	Site 38	1	✓	79878	15 pcs.
75	Q1 MLI IP END BLANKET	ME	390544	*	EA	1	Site 38	1	✓	79879	7 pcs.
76	Q1 & Q3 INSTALLATION TIE-ROD SHORT THREADED ROD	MA	390639	*	EA	2	R2,2,2	2	✓	81098	20 pcs.
77	Q1 NON-IP END ALIGNMENT FIDUCIAL SPACER	MD	390643	*	EA	2	R1,2,4	2	✓	80333	14 pcs.
78	Q1 VACUUM VESSEL HELIUM GUARD MOUNTING PLATE	MD	390724	*	EA	1	R7,1,3	1	✓	81256	7 pcs.
79	M6 x 45.0mm LG HEX SHCS, 18-8 STN STEEL	MA	393017	*	EA	4	IB4 Bin	4	✓	77846	52 pcs.
80	M8 x 25.0mm LG SHCS, 18-8 STN STEEL	MA	393018	*	EA	8	IB4 Bin	8	✓	76747	165 pcs.
81	M8 x 45.0mm LG SHCS, 18-8 STN STEEL	MA	393019	*	EA	8	IB4 Bin	8	✓	76748	44 pcs.
82	*M8 x 50.0 mm LG SHCS 18-8 STN STEEL*	*MA*	*393020*	*	*EA*	*12*	IB4 Bin	12	✓	77847	86 pcs.
83	M16-2 x 70.0 mm LG HEX SHCS, 18-8 STN STEEL	MA	393021	*	EA	8	IB4 Bin	8	✓	77840	223 pcs.
84	M6 HEX NUT, 18-8 STN STEEL	MA	393022	A	EA	4	IB4 Bin	4	✓	78236	54 pcs.
85	M8 HEX NUT, 18-8 STN STEEL	MA	393023	*	EA	16	IB4 Bin	16	✓	77848	228 pcs.

TD - Engineering Fabrication Component Kit List

ORIGINAL

	Description	Dwg Size	Number	Rev	Unit	Quantity Required	Location	Quantity Issued	E&F Verified	Routing Form Number	Spares Number / Comment
86	*M8 HEX NUT, 18-8 STN STEEL*	*MA*	*393023*	*	*EA*	*12*	IB4 Bin	12	✓	77848	228 pcs.
87	M6 FLAT WASHER, 18-8 STN STEEL	MA	393024	*	EA	32	IB4 Bin	32	✓	78891	696 pcs.
88	M6 FLAT WASHER 18-8 STN STEEL	MA	393024	*	EA	4	IB4 Bin	4	✓	78891	696 pcs.
89	M8 FLAT WASHER, 18-8 STN STEEL	MA	393025	*	EA	16	IB4 Bin	16	✓	76745	990 pcs.
90	*M8 FLAT WASHER, 18-8 STN STEEL*	*MA*	*393025*	*	*EA*	*12*	IB4 Bin	12	✓	76745	990 pcs.
91	M6 LOCK WASHER 18-8 STN STEEL	MA	393026	*	EA	4	IB4 Bin	4	✓	77850	52 pcs.
92	M8 LOCK WASHER, 18-8 STN STEEL	MA	393027	*	EA	16	IB4 Bin	16	✓	76744	1013 pcs.
93	*M8 LOCK WASHER, 18-8 STN STEEL*	*MA*	*393027*	*	*EA*	*12*	IB4 Bin	12	✓	76744	1013 pcs.
94	BUTTON HEAD CAP SCREW, M5 x 16.0 LG	MA	393028	*	EA	232	IB4 Bin	232	✓	76826	5486 pcs.
95	M10-1.5 x 25mm LG HEX SHCS 18-8 STN STEEL	MA	393036	*	EA	24	IB4 Bin	24	✓	77899	572 pcs.
96	M6-1.0 x 35mm LG HEX SHCS 18-8 STN STEEL	MA	393045	*	EA	16	IB4 Bin	16	✓	78886	368 pcs.
97	JAM NUT (LH)	MA	393046	*	EA	4	IB4 Bin	4	✓	80074	102 pcs.
98	M8 x 30mm LG HEX SPRING PIN 18-8 STN STEEL	MA	393048	*	EA	8	IB4 Bin	8	✓	78887	186 pcs.
99	M10 LOCK WASHER, 18-8 STN STEEL	MA	393220	*	EA	24	IB4 Bin	24	✓	80024	752 pcs.
100	STD ANSI HEX THIN JAM NUT 1/2-13 UNC	MA	393225	*	EA	8	IB4 Bin	8	✓	80073	236 pcs.
101	STD HEX COUPLING NUT 1/2-13 UNC (RH-LH)	MA	393226	*	EA	4	IB4 Bin	4	✓	80075	96 pcs.
102	THREADED ROD 1/2-13 UNC - 24 x 6 FT LONG	MA	393227	*	EA	2	R7,2,4	2	✓	80061	48 pcs.
103	THREADED ROD 1/2-13 UNC - 24 (LH) x 3 FT LONG	MA	393228	*	EA	2	R1,2,3	2	✓	80072	46 pcs.
Q1 / Q3 INSTALLATION TIE ROD ASSEMBLY		MC	390638	*							

TD - Engineering Fabrication Component Kit List

ORIGINAL

Description	Dwg Size	Number	Rev	Unit	Quantity Required	Location	Quantity Issued	E&F Verified	Routing Form Number	Spares Number / Comment
FIXED SUPPORT ASSEMBLY	*ME*	*390041*	*D*							
SLIDING SUPPORT ASSEMBLY	*ME*	*390042*	*C*							
Q1 INSULATED SHIELD AND PIPING ASSEMBLY	ME	390173	A							
Q1 INTERNAL PIPING ASSEMBLY (SEPARATE SHEET)	ME	390174	B							
Q1 HEAT EXCHANGER ASSEMBLY	ME	390175	*							
OUTER TUBE WELDMENT	ME	390176	*							
CORRUGATED TUBE ASSEMBLY	ME	390179	*							
Q1 PUMPING LINE WELDMENT	ME	390182	*							
Q1 THERMAL SHIELD ASSEMBLY	ME	390429	C							
COLD MASS INSULATION ASSEMBLY	*ME*	*390524*	*							
Q1 COLD MASS ASSEMBLY (SEPARATE SHEET)	ME	390525	*							
Q1 PIPING INSULATION	ME	390541	*							

ADDITIONAL PARTS REQUEST

ADDITIONAL PARTS REQUEST FORM SHALL BE USED TO ACCESS ALL ITEMS FROM INVENTORY WITH THE EXCEPTION OF PARTS KITS.

THIS FORM MUST BE SIGNED BY AN ACQUISITIONER BEFORE BRINGING TO THE STOCKROOM

MAGNET OR COIL # LHC (LQXA03)

REQUESTED BY Steve Gould

DATE REQUESTED 9/21/04

DELIVER TO ICB

BUDGET CODE 300/1.1.1.3.4(LCD)

NEED BY DATE 9/21/04

JOB TICKET #

MMR #

MACHINE SHOP REQ. #

PO #

PURCHASE RELEASE #

OTHER

PARTS STATUS (CHECK ONE)

- ☐ DEFECTIVE PARTS ISSUED
- ☐ PARTS SCRAPPED
- ☐ A/R ITEMS
- ☐ DEFECTIVE ASSEMBLY
- ☐ MISSING FROM KIT ALREADY ISSUED
- ☒ INDIVIDUAL PARTS
- ☐ CONSUMABLES
- ☐ PARTS LOST

ACQUISITIONER SIGNATURE [signature] **ID#** 9223 **DATE** 9/21/04

PLEASE INDICATE REVISION REQUIRED

Stk	LOCATION	PART #	REV	QTY	UOM	DESCRIPTION	RF #	SIR #
100	~~JB~~ 4 Bin	393307		24	Each	M4-.7X20MM HSHCS	81224	
100	~~JB~~ 4 Bin	393308		48	Each	M4 Lock Washer	81828	
242	~~JB~~ 4 Bin	393181		48	Each	M4 Flat Washer	81226	

STOCKROOM SIGNATURE [signature] **ID#** 12694 **DATE** 9/21/04

PARTS DELETED FROM DATABASE **ID#** **DATE**

A COPY OF THIS FORM IS TO BE INCLUDED IN WITH THE TRAVELER

PARTS RECEIVED BY [signature] **ID#** 4965 **DATE** 9/21/04

ADDITIONAL PARTS REQUEST

ADDITIONAL PARTS REQUEST FORM SHALL BE USED TO ACCESS ALL ITEMS FROM INVENTORY WITH THE EXCEPTION OF PARTS KITS.

THIS FORM MUST BE SIGNED BY AN ACQUISITIONER BEFORE BRINGING TO THE STOCKROOM

MAGNET OR COIL # *LHC (LQXA03)*

REQUESTED BY *Steve Gould*

DATE REQUESTED *9/21/04*

DELIVER TO *ICB*

BUDGET CODE *300/1.1.1.3.4(LCD)*

NEED BY DATE *9/21/04*

JOB TICKET # _____

MMR # _____

MACHINE SHOP REQ. # _____

PO # _____

PURCHASE RELEASE # _____

OTHER _____

PARTS STATUS (CHECK ONE)

- ☐ DEFECTIVE PARTS ISSUED
- ☐ PARTS SCRAPPED
- ☐ A/R ITEMS
- ☐ DEFECTIVE ASSEMBLY
- ☐ MISSING FROM KIT ALREADY ISSUED
- ☒ INDIVIDUAL PARTS
- ☐ CONSUMABLES
- ☐ PARTS LOST

ACQUISITIONER SIGNATURE Marsha Schmidt **ID#** 4223 **DATE** 9/21/04

PLEASE INDICATE REVISION REQUIRED

LOCATION	PART #	REV	QTY	UOM	DESCRIPTION	RF #	SIR #
IB4Bin	393369	–	24	Each	M4-.7 Nut	81826	

Stk 100

STOCKROOM SIGNATURE [signature] **ID#** 12648 **DATE** 9/22/04

PARTS DELETED FROM DATABASE _____ **ID#** _____ **DATE** _____

A COPY OF THIS FORM IS TO BE INCLUDED IN WITH THE TRAVELER

PARTS RECEIVED BY S Gould **ID#** 4965 **DATE** 9/22/04

ADDITIONAL PARTS REQUEST

ADDITIONAL PARTS REQUEST FORM SHALL BE USED TO ACCESS ALL ITEMS FROM INVENTORY WITH THE EXCEPTION OF PARTS KITS.

THIS FORM MUST BE SIGNED BY AN ACQUISITIONER BEFORE BRINGING TO THE STOCKROOM

MAGNET OR COIL # *LQXA03*

REQUESTED BY *S. Gould*

DATE REQUESTED *7/12/04*

DELIVER TO *ICB*

BUDGET CODE *300/1.1.1.3.4(LCD)*

NEED BY DATE *7/12/04*

JOB TICKET # _____

MMR # _____

MACHINE SHOP REQ. # _____

PO # _____

PURCHASE RELEASE # _____

OTHER _____

PARTS STATUS (CHECK ONE)

☐ DEFECTIVE PARTS ISSUED ☐ PARTS SCRAPPED ☐ A/R ITEMS

☐ DEFECTIVE ASSEMBLY ☐ MISSING FROM KIT ALREADY ISSUED

☒ INDIVIDUAL PARTS ☐ CONSUMABLES ☐ PARTS LOST

ACQUISITIONER SIGNATURE Marsha Schmidt **ID#** 4223 **DATE** 7/12/04

PLEASE INDICATE REVISION REQUIRED

IN STOCK	LOCATION	PART #	REV	QTY	UOM	DESCRIPTION	RF #	SIR #
90	*IB#4-BIN*	*393342*		*6*	*Each*	*M10x40mm SHCS*		
352	R2,-2,3	393360		16	Each	M4 x 20mm pin		

STOCKROOM SIGNATURE _____ **ID#** _____ **DATE** _____

PARTS DELETED FROM DATABASE _____ **ID#** _____ **DATE** _____

A COPY OF THIS FORM IS TO BE INCLUDED IN WITH THE TRAVELER

PARTS RECEIVED BY _____ **ID#** _____ **DATE** _____

Revision Request Control Number: 1617

Specification Number: 5520 - TR - 333755 Current Revision: NONE

Traveler or Document Title LHC Q1 LQXA Cryostat Final Assembly Traveler

Step #/Description of Revision:

1.4 Removed Step. "All personnel performing steps in this traveler must have documented training for this traveler and associated operating procedures."
3.6 Added Step. "Weld the Helium Guard Mounting Plate (MD-390724) to the Vacuum Vessel (ME-390122) as per Q1 Vacuum Vessel Assembly(ME-390122)." per LQXA01 and Tom Page.
4.0 Removed Step. "Suspension System Assembly" Moved to Q1 Module Assembly Traveler per Jim Rife and Tom Page. (Subsequent added steps reflect New Step Numbers)
4.0 Modified Steps. Modified "Piping Assembly" steps from step 4.11 to 4.53 per Tom Page.
5.7 Modified Step. Changed to "Remove Pipe Supports (MD-390092), Pipe Anchor (MC-390486) and blankets. Wrap blankets in plastic bag to keep clean for later use. Label blankets as they are removed for later positioning." (New Step 4.7)
5.8 Modified Step. Changed to "Install Pipe Supports (MD-390092) and Pipe Anchor (MC-390486) to same locations as in step 4.4 and 4.5 respectively." (New Step 4.8)
5.11 Added Step. "Leak Check the Q1 Thermal Shield Cooling Pipe Crossover (MD-390466) to the Q1 Thermal Shield Cooling Tube Weldment (MD-390431) per ES-107240 and record results in table below." per LQXA01.
6.8 Added Step. "Install Conflat Flanges (MA-390374) w/ Copper Gaskets (MA-390375) and Bolt Set (MA-390376) to Cryostat as per Q1 Cryostat General Assembly (ME-390127)." per LQXA01.
6.9 Added Step. "Install Target Holders (MD-390539), (MD-390540) and (MD-390211) as per Q1 Cryostat General Assembly (ME-390127)." per LQXA01.
6.10 Added Step. "Install Reference Socket Cup (MA-390426) as per Q1 Cryostat General Assembly (ME-390127)." per LQXA01.
6.11 Modified Step. Deleted "...Cutouts will have to be made for the Upper Support Lugs." per LQXA01. (Already cut.) (New Step 5.12)
6.11 Added Step. "Install Q1 Thermal Shield Cooling Pipe Crossover(MD-390466) to Q1 Thermal Shield Cooling Tube Weldment (MD-390431)."
6.12 Added Step. "Weld the Cooling Pipe Crossover Connectors (MA-390467) to the Cooling Tube Weldment (MD-390431) and the ooling Pipe Crossover (MD-390466) as per Q1 Thermal Shield Assembly (ME-390429)." per LQXA01.
7.1 Modified Step. Added new method of measuring Ls &Q per Rodger Bossert.
8.0 Added Step. Final Preparations

John Szostak	Jim Rife	3/10/2004
Originator	Responsible Authority	Date
Revision Incorporated into the Traveler:	John Szostak	7/14/2004
	Revision Incorporated By	Date
Process Engineering Final Review:	Jamie Blowers	7/14/2004
	Process Engineering/Designee	Date

Instructions for the completion of the Revision Request Form

Note(s):

Multiple steps may be effected by one Revision Request Form but only one specific Traveler or Document may be effected by each Revision Request Form.

If completing this form by hand, a Revision Request Control Number must be obtained before processing.

If completing this form entirely by electronic means, the printed copy to be filed in the Process Engineering Office is to be initialed by the individual incorporating the Revision Request and the individual who reviewed the Traveler or Document.

Originator Instructions:

1) Specification Number: - Enter the Specification Number of the Traveler or Document to be revised. (Document title is inserted automatically from the spec. #)

2) Current Revision: - Enter the Revision of the Traveler or Document to be revised.

3) Step# / Description of the Revision: - Enter a description of the revision to be made and the step# it applies to, if applicable. If needed to describe the revision attach a copy of the page(s). If the revision is coming from a related document such as a Discrepancy Report or an Engineering Order attach a copy of that document to the Revision Request Form.

4) Originator: - Originator is the person generating the form. (Select Name from List)

5) Responsible Authority: - Responsible Authority is person responsible for the process in question. (Select Name from List)

Process Engineering Office Instructions:

1) Revision Incorporated into the Traveler: - Signature of the individual who incorporated the revision.

2) Process Engineering Final Review: - Review the Traveler or Document revised, sign and date the form. The original completed Revision Request Form will be retained by the Process Engineering Office in the Revision Request Binder.

Revision Request Control Number: 1692

Specification Number: 5520 - TR - 333755 Current Revision: B

Traveler or Document Title LHC Q1 LQXA Cryostat Final Assembly Traveler

Step #/Description of Revision:

5.1 Added Step. "Install the Threaded Rods (Tie Rod Assembly) (MC-390638). See copy of step 10.9 (Q1 Module Assembly Traveler, TR-333754) in designated book, for the distance between the Suspension Rings. Record the previously recorded measurements below." per TR-333730, LQXC01 and Tom Page.

5.8 Moved Step. "Install the Cold Mass Insulation Mounting Lug Covers(MC-390496)." per TR-333730, LQXC01 and Tom Page. New Step 5.2.

7.2 Modified Step. Added Picture of Corrector Bus Leads. Modified Table.

John Szostak	Jim Rife	12/9/2004
Originator	Responsible Authority	Date
Revision Incorporated into the Traveler:	John Szostak	12/15/2004
	Revision Incorporated By	Date
Process Engineering Final Review:	Bob Jensen	12/15/2004
	Process Engineering/Designee	Date

Instructions for the completion of the Revision Request Form

Note(s):

Multiple steps may be effected by one Revision Request Form but only one specific Traveler or Document may be effected by each Revision Request Form.

If completing this form by hand, a Revision Request Control Number must be obtained before processing.

If completing this form entirely by electronic means, the printed copy to be filed in the Process Engineering Office is to be initialed by the individual incorporating the Revision Request and the individual who reviewed the Traveler or Document.

Originator Instructions:

1) Specification Number: - Enter the Specification Number of the Traveler or Document to be revised. (Document title is inserted automatically from the spec. #)

2) Current Revision: - Enter the Revision of the Traveler or Document to be revised.

3) Step# / Description of the Revision: - Enter a description of the revision to be made and the step# it applies to, if applicable. If needed to describe the revision attach a copy of the page(s). If the revision is coming from a related document such as a Discrepancy Report or an Engineering Order attach a copy of that document to the Revision Request Form.

4) Originator: - Originator is the person generating the form. (Select Name from List)

5) Responsible Authority: - Responsible Authority is person responsible for the process in question. (Select Name from List)

Process Engineering Office Instructions:

1) Revision Incorporated into the Traveler: - Signature of the individual who incorporated the revision.

2) Process Engineering Final Review: - Review the Traveler or Document revised, sign and date the form. The original completed Revision Request Form will be retained by the Process Engineering Office in the Revision Request Binder.

Revision Request Control Number: 1705

Specification Number: 5520 - TR - 333755 Current Revision: C

Traveler or Document Title LHC Q1 LQXA Cryostat Final Assembly Traveler

Step #/Description of Revision:

1.6 Added Step. "Protect the bellows during all stages of production." DR No. HGQ-0500.
3.4 Modified Step. Changed to "Attach the Leak Check sticker for the Vacuum Vessel Assembly (ME-390122) per ES-107240 to the table below." Per DR No. HGQ-0469.
4.10 Modified Step. Changed to "Weld the Retainer Clips (MA-390103) to the Cold Mass Outer Shell as per Q1 Internal Piping Assembly (ME-390174)." Per LQXA03.
4.12 Modified Step. Changed to "Clean the Heat Exchanger Outer Shell Pipe (MD-390176), Pumping Line Pipe (MB-390147), Cool Down Pipe (MB-390146) and the 4.5K Intercept Line Tubes (MB-390192) with Ethyl Alcohol (Fermi stock 1920-0550) and Kimwipes (Fermi stock 1660-2500) or equivalent." DR No. HGQ-0479.
4.35 Added Step. "Install the Fiducial Mounting Blocks (MB-390808) per Q1 Cold Mass Welded Assembly (ME-390526)."
4.36 Added Step. "Weld the Fiducial Mounting Blocks (MB-390808) per Q1 Cold Mass Welded Assembly (ME-390526)."
7.3 Added Step. "If needed, perform a stretched wire measurement of the system, noting the relative position and roll of the three magnetic elements to each other."
8.5 Removed Step. "Install the Vinyl Flange Covers (MA-390491), (MA-390492), (MA-390493), (MA-390494), & the Alignment Fiducial Covers (MA-390495)." Moved to Q1 Shipping Traveler.

John Szostak	Jim Rife	1/18/2005
Originator	Responsible Authority	Date
Revision Incorporated into the Traveler:	John Szostak	2/28/2005
	Revision Incorporated By	Date
Process Engineering Final Review:	Jamie Blowers	2/28/2005
	Process Engineering/Designee	Date

Instructions for the completion of the Revision Request Form

Note(s):

Multiple steps may be effected by one Revision Request Form but only one specific Traveler or Document may be effected by each Revision Request Form.

If completing this form by hand, a Revision Request Control Number must be obtained before processing.

If completing this form entirely by electronic means, the printed copy to be filed in the Process Engineering Office is to be initialed by the individual incorporating the Revision Request and the individual who reviewed the Traveler or Document.

Originator Instructions:

1) Specification Number: - Enter the Specification Number of the Traveler or Document to be revised. (Document title is inserted automatically from the spec. #)

2) Current Revision: - Enter the Revision of the Traveler or Document to be revised.

3) Step# / Description of the Revision: - Enter a description of the revision to be made and the step# it applies to, if applicable. If needed to describe the revision attach a copy of the page(s). If the revision is coming from a related document such as a Discrepancy Report or an Engineering Order attach a copy of that document to the Revision Request Form.

4) Originator: - Originator is the person generating the form. (Select Name from List)

5) Responsible Authority: - Responsible Authority is person responsible for the process in question. (Select Name from List)

Process Engineering Office Instructions:

1) Revision Incorporated into the Traveler: - Signature of the individual who incorporated the revision.

2) Process Engineering Final Review: - Review the Traveler or Document revised, sign and date the form. The original completed Revision Request Form will be retained by the Process Engineering Office in the Revision Request Binder.

Traveler Title:	Specification No:	Revision:	DR No:
LHC Q1 LQXA Cryostat Final Assembly Traveler	5520-TR-333755	A	HGQ-0500

Step No:	Drawing No:	Routing Form No:	Serial No:	Rework ID:
9.5	390174		LQXA03	0

Discrepancy Description:

The bellows with the hypertronics in it has two dents on it on the bottom of the bellows. This is on the lead end of the magnet.

FEB 22 2005

Originator: Steve Gould

Date: 10/25/2004

Cause of Nonconformance:

Dents in the bellows from unknown cause.

Responsible Authority: Thomas Page

Date: 11/1/2004

Disposition:

The bellows was leak checked and is leak tight.

Responsible Authority: Thomas Page

Date: 11/1/2004

Corrective Action to Prevent Recurrence:

Protect the bellows during all stages of production. (TRR No. 1705, 1707, 1709, 1695, 1708, 1711, 1712, 1706)

Responsible Authority: Thomas Page

Date: 11/1/2004

Corrective Action/Disposition Verified By: John Szostak

Date: 2/21/2005

Will Configuration be affected?: ☐ YES ☑ NO

Identified problem area:

☐ Material ☐ Manpower ☑ Method ☐ Machine ☐ Measurement

Reviewed By: Bob Jensen

Date: 2/22/2005

Traveler Title:	Specification No:	Revision:	DR No:
Q2 LQXB Cryostat Final Assembly Traveler	5520-TR-333644	D	HGQ-0469

Step No:	Drawing No:	Routing Form No:	Serial No:	Rework ID:
3.5	390206		LQXB06	0

Discrepancy Description:

During the building process, the leak check ticket for the vacuum vessel was lost.

Originator: Steve Gould

Date: 7/9/2004

Cause of Nonconformance:

Someone misplaced the leak check ticket.

Responsible Authority: Thomas Page

Date: 7/9/2004

Disposition:

Use vessel. All the vessels passed leak check.

Responsible Authority: Thomas Page

Date: 7/9/2004

Corrective Action to Prevent Recurrence:

Remove leak check tickets prior to performing any work on components. No traveler revision required.

Responsible Authority: Thomas Page

Date: 7/9/2004

Corrective Action/Disposition Verified By: John Szostak

Date: 7/27/2004

Will Configuration be affected?: ☐ YES ☑ NO

Identified problem area:

☐ Material ☐ Manpower ☑ Method ☐ Machine ☐ Measurement

Reviewed By: Bob Jensen

Date: 7/28/2004