Document ID:

3417

LHC Q1 LQXA Cryostat Shipping Traveler

333728 / Rev. C

Job No:	**248**
E + F Project/Task No.:	**300/1.1.1.6.2**
M + S Project/Task No.:	**300/1.1.1.6.2**

Place This Side Down For Scanning!!!

LQXA04-0

Document ID:

3417

Job No.:

248

Project/Task No.

300/1.1.1.6.2

Series:

LQXA

Serial No:

LQXA04

Rework ID:

0

Specification No.:

333728

Revision:

C

LQXA04-0

Fermi National Accelerator Laboratory
Batavia, IL 60510

LARGE HADRON COLLIDER
Q1 - LQXA
SHIPPING TRAVELER

Reference Drawing(s):
Q1/Q3 Shipping Fixture Final Assembly
ME-390729
Q1 Magnet Shipping Assembly
ME-390727

Project #/Task #: 300/1.1.1.6.2	**Job # 248**
Released By: Bob Jensen	**Magnet/Device Series: LQXA**
Date Issued: 11/18/2004 2:17:34 PM	**Scanned Pages: ~~34~~ 35**
Prepared by: B. Jensen	

Title	Signature	Date
TD / E&F Process Engineering	*Bob Jensen* Bob Jensen / Designee	*11/16/04*
TD / LHC Production Supervisor	*Steve Gould* Jim Rife / Designee	*11/16/04*
TD / LHC Production Engineer	*Rodger Bossert* Rodger Bossert / Designee	*11/16/04*
TD / LHC Project Engineer Cryostat	*Tom Nicol* Tom Nicol / Designee	*11/16/04*
TD / LHC Project Physicist	*Mike Lamm* Michael Lamm / Designee	*11/16/04*
TD / LHC Program Manager	*Jim Kerby* Jim Kerby / Designee	*11/18/04*

Revision Page

Revision	Step No.	Revision Description	TRR No.	Date
None	N/A	Initial Release	N/A	8/10/04
A	3.0	Step 3.0 New step to perform a nitrogen purge.	1666	
	3.0	Step 3.0 Moved old Step 3.0 to become new Step 7.0		
	3.4	New Step 7.5 Deleted old diagram and added new		
	3.5	New Step 7.6 Updated diagram.		
	6.0	Corrected Q1 RTD label from TT8331 to TT8321in Table 6.0.1		
	6.0	Corrected Circuit A Label from HT1111- to YT1111- in Table 6.0.2		
	6.18	Added new step for Hipotting		
	10.0	Added information about Shipping w/check box		
	11.3	Deleted step to record serial number		
	11.7	Added Steps to verify protective bag installation responsibility/container assy		
	12.7	Deleted step		
	12.8	Moved to become new Step 7.4		
	13.3	Moved to become new Step 10.11		
B	8.7	Deleted second technician signoff line (duplicate)	1676	11/2/04
	8.1	Moved Step 8.10 to become new Step 8.1		
	11.8	Change from Fermi supplied material to (VCI Plastic)		
	11.9	Deleted step to; Hook-up a vacuum source and pump down the protective bag material.		
C	6.17	Added picture. Same as used in Step 7.1	1683	11/16/04
	7.5	Switched Step 7.5 with 7.6 and vice versa.		
	7.6	Added length measurement 342.5 mm		
	10.2	New step. Added check-off box to indicate Frame Separator Bars status.		
	10.3	New Step listing parts needed for Separator Bars.		
	10.6	New Step to install Shipping Frame into Shipping Container		

Ensure appropriate memos and specific instructions are placed with the traveler before issuing the sub traveler binder to production.

1.0 General Notes

1.1 All steps that require a sign-off shall include the Technician/Technician(s)s first initial and full last name.

1.2 No erasures or white out will be permitted to any documentation. All incorrectly entered data shall be corrected by placing a single line through the error, initial and date the error before adding the correct data.

1.3 All Discrepancy Reports issued shall be recorded in the left margin next to the applicable step.

1.4 All personnel performing steps in this traveler must have documented training for this traveler and associated operating procedures.

1.5 Personnel shall perform all tasks in accordance with current applicable ES&H guidelines and those specified within the step.

1.6 Cover the product/assembly with Green Herculite (Fermi stock 1740-0100) when not being serviced or assembled.

2.0 Parts Kit List

2.1 Attach the completed Parts Kit for this production operation to this traveler. Ensure that the serial number on the Parts Kit matches the serial number of this traveler. Verify that the Parts Kit received is complete.

Process Engineering/Designee

11/23/09
Date

3.0 Magnet Electrical Preparation

3.1 Does magnet require a purge of compressed dry nitrogen (N_2).

☐ YES PURGE REQUIRED, Proceed to Step 3.2

☒ NO PURGE REQUIRED, Proceed to Step 4.0

STOP

Responsible Authority/Physicist _____ Date 12/1/04

3.2 If YES in Step 3.1, perform a required purge for a minimum of 2.5 days (3 days maximum) at a flow rate of 5 CFH of N_2.

	Purge Date	Purge Time	Purge Flow Rate
Start			
Finish			

Technician(s) N/A Date _____

4.0 Final Electrical Inspection

4.1 Perform an electrical inspection on each of the Magnet Halves and complete Magnet. Refer to the Valhalla and Leader Free Standing Coil Measurement Procedure (ES-292306).

To measure the Resistance of the Q1 Cold Mass:

4.1.1 Use Valhalla Scientific 4300B Digital Micro-Ohmmeter.
4.1.2 Set Test Current to .1 Amp
4.1.3 Set Scale to 2V full scale.
4.1.4 Turn temperature compensation on.
4.1.5 Turn test current off.
4.1.6 Connect I_{HI} to 'A' Power Lead (Quadrant #4) inner power lead as shown in Step 3.4.
4.1.7 Connect I_{LO} to 'B' Power Lead (Quadrant #3) inner power lead as shown in Step 3.4.
4.1.8 Turn test current on.
4.1.9 Connect V_{HI} and V_{LO} to voltage taps as shown in resistance table.
4.1.10 Read resistance and record in traveler.

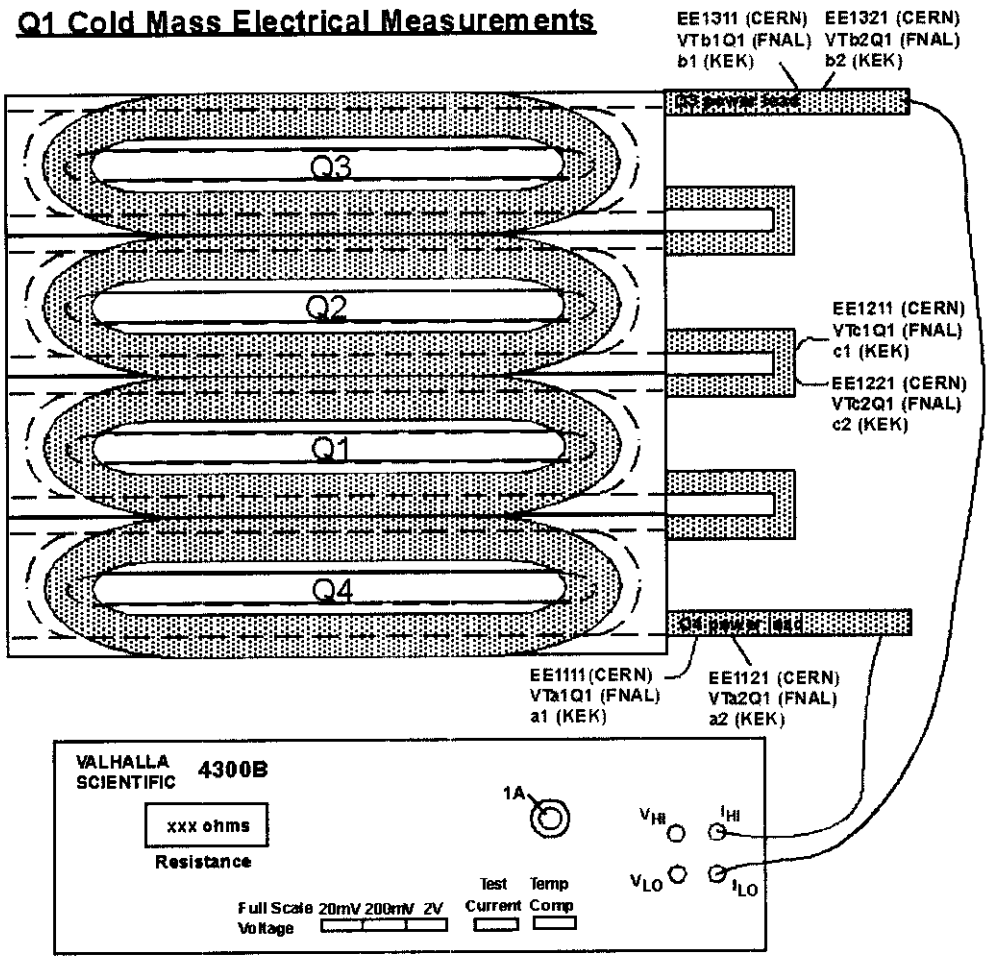

Table 4.0.1				
Q1 Resistance				Total Resistance
Voltage Tap Serial Number				Total Resistance
Description	Connect	CERN	KEK	Nominal 3.35 to 3.45 Ω
Half Magnet	V_{HI}	EE1111	a1	3.411 Ω
	V_{LO}	EE1211	c1	
Half Magnet	V_{HI}	EE1211	c1	3.419 Ω
	V_{LO}	EE1311	b1	
Total	V_{HI}	EE1111	a1	6.828 Ω
	V_{LO}	EE1311	b1	Nominal 6.75 to 6.85

Technician(s) _____ Date 12/1/04

Check resistance of Redundant Voltage Taps.

Table 4.0.2				
Q1 Redundant Voltage Taps				
Description	Connect	CERN	KEK	Resistance
Half Magnet	V_{HI}	EE1121	a2	3.409 Ω
	V_{LO}	EE1221	c2	3.35 to 3.45
Half Magnet	V_{HI}	EE1221	c2	3.418 Ω
	V_{LO}	EE1321	b2	3.35 to 3.45

Technician(s) _____ Date 12/1/04

5.0 Measure Ls and Q of a Q1 Cold Mass:

5.1 Use Agilent 4263B LCR Meter.
5.2 Turn power on by pushing line button. Wait 30 seconds until display screen is lit.
5.3 Recall program #1. To do this, push recall (Rcl), then push #1, then push Enter.
5.4 Push Auto/Hold button to release hold.
5.5 Verify that the frequency displayed in the upper right corner of the display screen is 1000 Hz and the level recorded in the lower right corner of the display screen is 1V or 1000 mV.
5.6 Connect H_{cur} to 'A' Power Lead (Quadrant #4) as shown in Step 3.4.
5.7 Connect L_{cur} to 'B' Power Lead (Quadrant #3) as shown in Step 3.4.
5.8 Connect H_{pot} and L_{pot} to voltage taps as shown in Ls and Q tables..
5.9 Read Ls and Q from display and record in traveler.

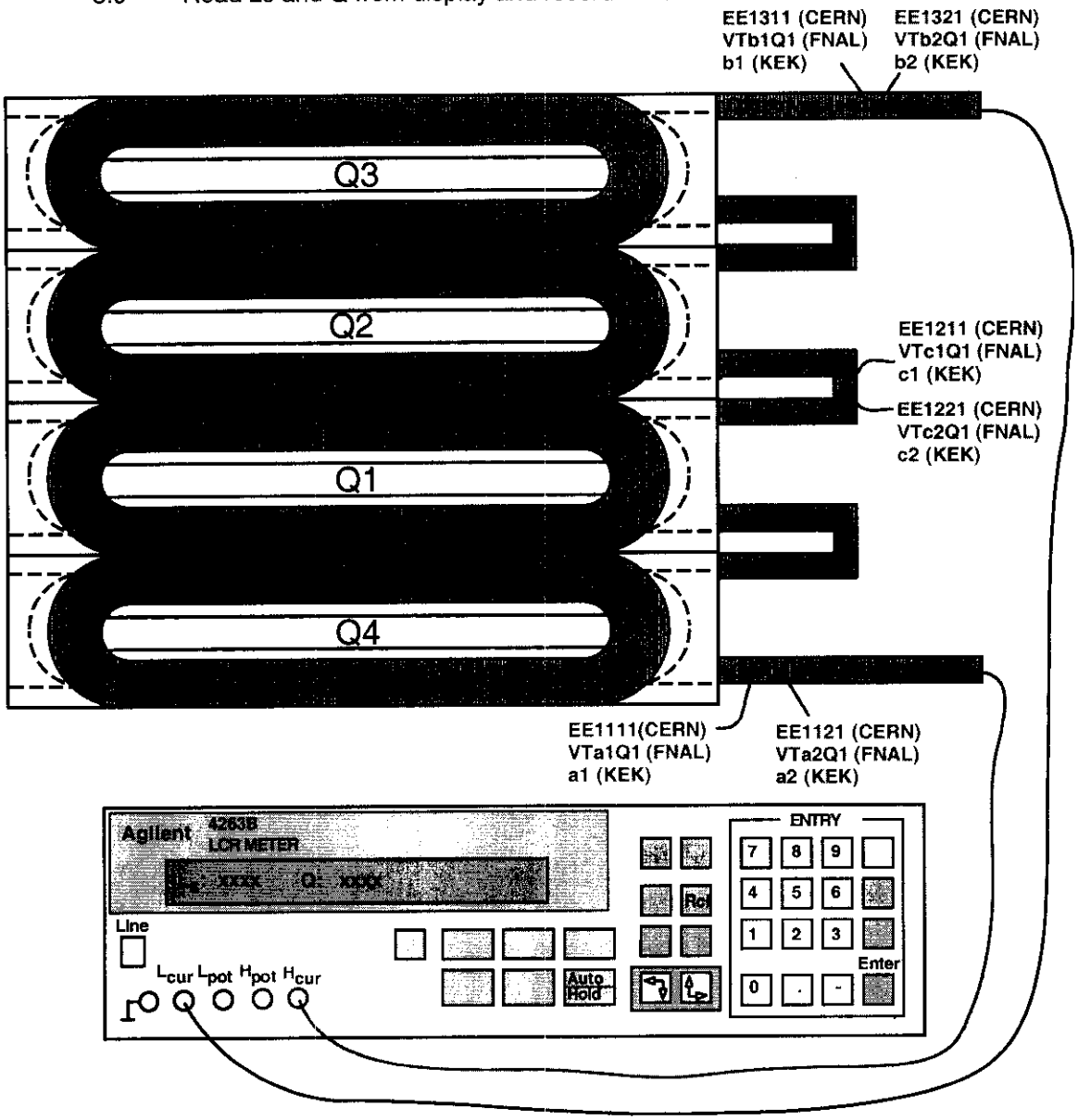

Table 5.0.1				
Q1 Inductance				
Voltage Tap Serial Numbers				Total Inductance
Description	Connect	CERN	KEK	Nominal 15 to 16 mH
Half Magnet	HPOT	EE1111	a1	15.396 mH
	LPOT	EE1211	c1	
Half Magnet	HPOT	EE1211	c1	15.381 mH
	LPOT	EE1311	b1	
Total	HPOT	EE1111	a1	30.771 mH Nominal 30 to 32 mH
	LPOT	EE1311	b1	

Table 5.0.2				
Q1 Q-Factor				
Voltage Tap Serial Numbers				Total Q
Description	Connect	CERN	KEK	Nominal 1.0 to 1.2
Half Magnet	HPOT	EE1111	a1	1.1
	LPOT	EE1211	c1	
Half Magnet	HPOT	EE1211	c1	1.1
	LPOT	EE1311	b1	
Total	HPOT	EE1111	a1	1.1 Nominal 1.0 to 1.2
	LPOT	EE1311	b1	

Technician(s) _____ Date 12/1/04

6.0 Thermometer (RTD) and Cryogenic (Warm-Up) Heater

To Measure the resistance of a Thermometer (RTD):

6.1 Use Hewlett Packard HP3457A digital multimeter.
6.2 Record temperature of building within +/- 5 degrees.
6.3 Press line button to turn line on.
6.4 Connect wires as shown in Figure below.
U+ (Black) to Sense HI
I+ (Yellow) to Input HI
U- (Red) to Sense LO
I- (Green) to Input LO
6.5 Push blue button (function key) once.
6.6 Push OHMF button.
6.7 Verify arrow in readout is above the 4WΩ (meaning a 4 wire resistance measurement).
6.8 Read resistance in ohms and record in traveler.

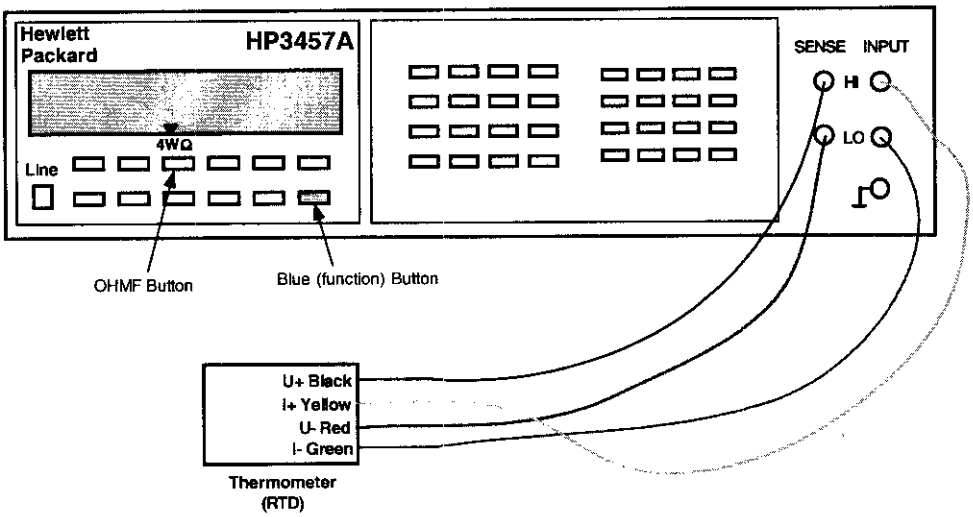

To measure the resistance of a Cryogenic (Warm-up) Heater

6.9 Use Hewlett Packard HP3457A digital multimeter.
6.10 Record temperature of building within +/- 5 degrees.
6.11 Press line button to turn line on.
6.12 Connect wires as shown in Figure below.
6.13 Push blue button (function key) once.
6.14 Push OHMF button.
6.15 Verify arrow in readout is above the 4WΩ (meaning a 4 wire resistance measurement).

Note: Although this is technically a 4 wire measurement, it is effectively a 2 wire measurement, since there are only 2 wires connected to each heater.

6.16 Read resistance in ohms and record in traveler.

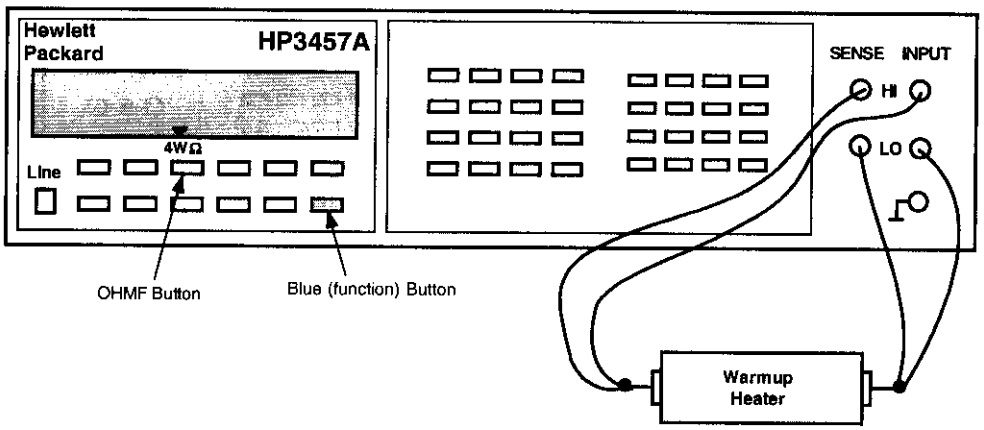

Table 6.0.1			
Q1 – RTD's and Cryogenic (Warm-Up) Heaters			
Temperature of Building +/- 5° 70°F			
Component	**CERN**	**Mfg Resistance Expedition**	**Resistance** Nominal 60 - 70 Ω
Q1 RTD primary CX-CS-X16802	TT8311	64.231	66.363 Ω M/L
Q1 RTD redundant CX-CS-X16800	TT8321	66.455	68.684 Ω M/L
Q1 Cryogenic (warm-up) Heater (LE) – wire @ top (CERN #1 I+)	EH8311+		17.574 Ω Nominal 16 to 18.5
Q1 Cryogenic (warm-up) Heater (LE) – wire @ bottom (CERN #1 I-)	EH8311-		
Q1 Cryogenic (warm-up) Heater (Non-LE) – wire @ top (CERN #2 I+)	EH8321+		18.019 Ω Nominal 16 to 18.5
Q1 Cryogenic (warm-up) Heater (Non-LE) – wire @ bottom (CERN #2 I-)	EH8321-		

Technician(s) _____ Date 12/1/04

Using the Hewlett Packard HP3457A digital multimeter, measure the Protection (Strip) Heater Resistance for Q1.

Table 6.0.2				
Q1 Protection (Strip) Heater Resistance				
Description	**CERN**	**KEK**	**Limit**	**Resistance**
Circuit A	**YT1111+**	**HA1**	**28 to 32Ω**	31.401 Ω
	YT1111-	**HA2**		
Circuit B	**YT1121+**	**HB1**	**28 to 32Ω**	31.384 Ω
	YT1121-	**HB2**		

Technician(s) _____ Date 12/1/04

6.17 Using the Valhalla, connect power thru the corrector Power Leads (HA1 and HB1 to measure Q1-H1 or VA1 and VB1 to measure Q1-V1). Connect the Sense Leads as shown in table below and record resistance.

Table 6.0.3			
MCBX Corrector Coil Taps			
Component	Fermi Label	CERN Label	Resistance
Q1-H1	VTH1	EE8121	2023 Ω
	HB1	N/A	Nominal 20 to 23
Q1-V1	VTV1	EE81111	17.29 Ω
	VB1	N/A	Nominal 17 to 20

Technician(s) _____ Date 12/1/04

6.18 Does Magnet require Hipotential Testing

☒ YES HIPOT REQUIRED, Proceed to Step 6.19

☐ NO HIPOT NOT REQUIRED, Proceed to Step 7.0

Maximum Voltage	1500 V

STOP

Responsible Authority/Physicist _____ Date 12/1/04

XXX 6.19 Hipot according to table below. Hipot to value recorded in Step 6.18. Maximum leakage is 3μA.

STOP

Have Crew Chief verify setup and sign below before continuing.

Crew Chief _____ Date 12/1/04

Table 6.0.4			
Hipot Heaters to Coil and Ground.			
High Potential	**Grounded**	**Floating**	**Leakage**
All Strip Heaters	Magnet Coils, Corrector Coils, Yoke, RTD's and Warm-up Heaters	Nothing	726 nA

Table 6.0.5			
Hipot Coil to Heaters and Ground			
High Potential	**Grounded**	**Floating**	**Leakage**
All Magnet Coils	Corrector Coils, Strip Heaters, Yoke, RTD's and Warm-up Heaters	Nothing	258 nA

Technician(s) _____ Date 12/1/04

Responsible Authority/Physicist _____ Date 12/1/04

7.0 Magnet Preparation Non-IP Magnet End

7.1 Separate, identify, and label the Non-IP Magnet End Corrector leads as per ME-369894 and figure below.

Technician(s) _____ Date 12/2/04

7.2 Locate and identify the 8 KA Bus Leads.

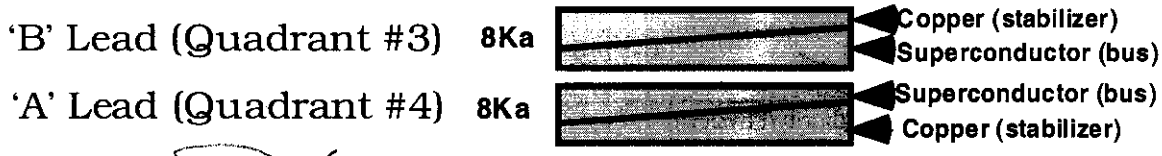

Technician(s) _____ Date 12/2/04

7.3 Insulate the 8 KA Bus Leads using approved methods.

Note: These leads must be insulated using approved methods (refer to ME-369894), first as an individual lead, then insulated as a pair to prevent 'shorting' to the other leads

Technician(s) _____ Date 12/2/04

7.4 Insulate the magnet leads using ¾" Black Shrink Tubing (MA-318797). Ensure that the entire length of magnet leads are covered before heat shrinking.

Technician(s) _____ Date 12/02/04

7.5 Move leads back and forth to ensure that the leads have sufficient travel for thermal expansion. Leads should have travel shown in figure below. From inside the bellows, measure from the outer edge of the Bellows to Tube adapter ring inward toward the magnet center.

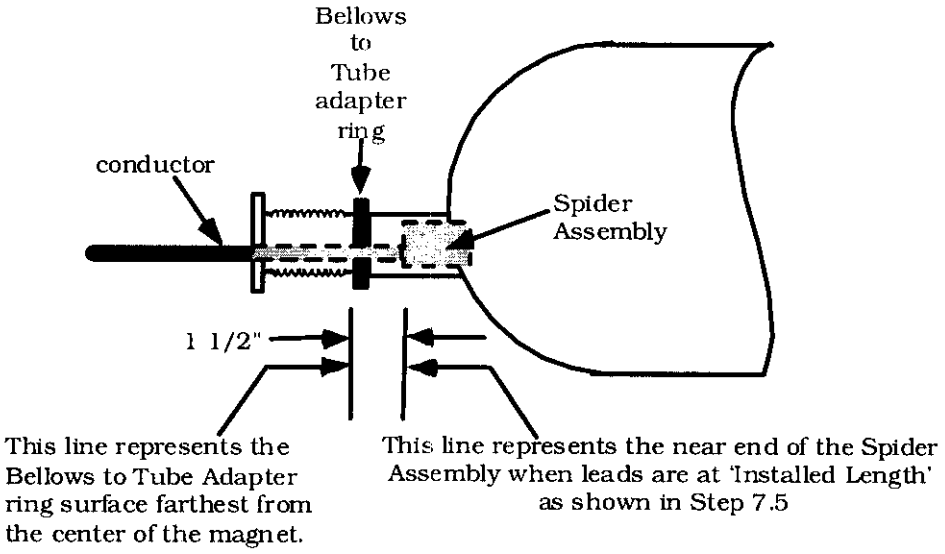

Record Travel Distance	1 3/4" (RP)

7.6 Measure and record the length of the conductor from the 'flat' of the magnet dome to the end of the conductor and record in the box provided below.

Note: The 440 mm dimension for the magnet leads includes an approximate 30 mm of extra buffer cable for installation tolerances.

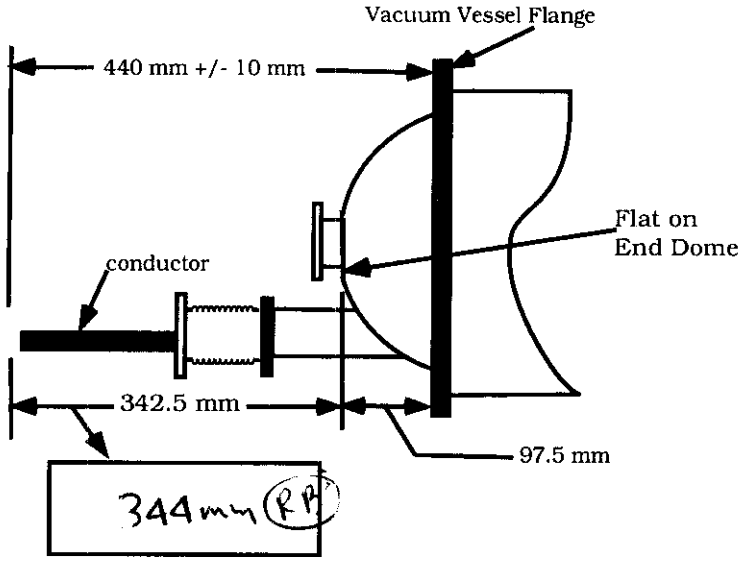

Technician(s) _____ Date 12/1/04

STOP

7.7 Verify Step 7.5 conductor measurement and Step 7.6 Spider Assembly measurement are acceptable

Responsible Authority/Physicists

12-1-04
Date

8.0 Magnet End Preparation

8.1 Install Bellows End Sliding Flange Assembly (ME-390021) using Bolts XXX (XX ea)on both the Non-IP and IP Magnet Ends..

Technician(s) _____ Date 12/2/04

8.2 Acquire Q1/Q3 Shipping Restraint Assembly (ME-390250)(1 ea).

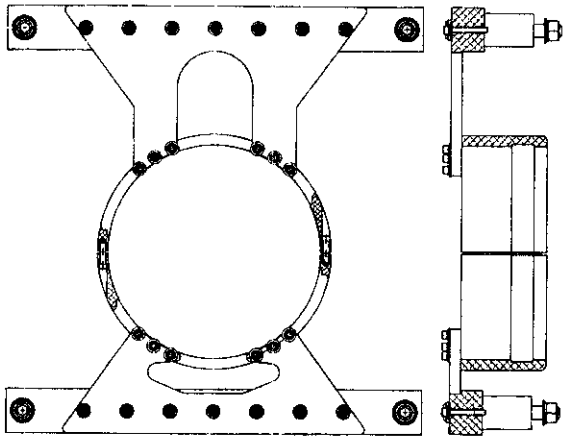

Q1/Q3 Shipping Restraint
End View
ME-390250

Q1/Q3 Shipping Restraint
Side View
ME-390250

Technician(s) _____ Date 12/2/04

8.3 Acquire Q1 Non IP-End Shipping Restraint Assembly (ME-390251)(1 ea).

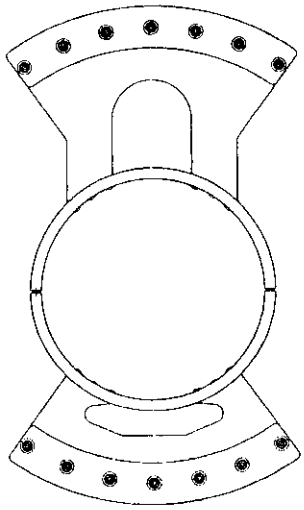

Q1 IP-End Shipping Restraint
End View
ME-390251

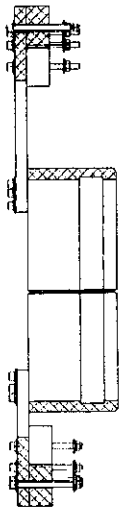

Q1 IP-End Shipping Restraint
Side View
ME-390251

Technician(s) _____ Date 12/2/04

8.4 Install the Shipping Restraint on the Non- IP Magnet end.

Note: Installation Shipping Restraint bolts should be only finger tight until complete assembly is installed.

8.4.1 Install Cold Mass Collar (MD-390239) and secure using Bolt (MA-393191) (6 ea), and Washer (MX-XXXXXX)(X ea).

8.4.2 Install Upper Support Cross Bar (MD-390238)(1 ea) with Spacer Bushing (MB-390577) (2 ea) using Bolt (MA-393183 (2 ea), LockWasher (MA-393186) (4 ea), Plain Washer (MA-393185) (4 ea), and Nut (MA-393184)(2 ea).

8.4.3 Install Lower Support Cross Bar (MD-390238)(1 ea) with Spacer Bushing (MB-390577) (2 ea) using Bolt (MA-393183 (2 ea), LockWasher (MA-393186) (4 ea), Plain Washer (MA-393185) (4 ea), and Nut (MA-393184)(2 ea).

8.4.4 Install the Upper Bridge (ME-390240) to the Upper Support Bar using Bolt (MA-393187) (7 ea), Lock Washer (MA-393061) (7ea), and Flat Washer (MA-393060) (7ea).

8.4.5 Install the Lower Bridge (ME-390241) to the Lower Support Bar using Bolt (MA-393187) (7 ea), Lock Washer (MA-393061) (7ea), and Flat Washer (MA-393060) (7ea).

8.4.6 Secure Upper Bridge to Cold Mass Collar with Bolt (MA-393191) (6 ea), Lock Washer (MA-393061) (6 ea), and Plain Washer (MA-393060) (6 ea).

8.4.7 Secure Upper Bridge to Cold Mass Collar with Bolt (MA-393191) (6 ea), Lock Washer (MA-393061) (6 ea), and Plain Washer (MA-393060) (6 ea).

8.4.8 Tighten all the Shipping Restraint Bolts.

Technician(s) _____ Date 12/2/04

8.5 Install the Shipping Restraint on the IP Magnet end.

Note: Installation Shipping Restraint bolts should be only finger tight until complete assembly is installed.

8.5.1 Install Cold Mass Collar (MD-390239) and secure using Bolt (MA-393191) (6 ea), and Washer (MX-XXXXXX)(X ea).

8.5.2 Install Upper Support Cross Bar (MD-390238)(1 ea) with Spacer Bushing (MB-390577) (2 ea) using Bolt (MA-393183 (2 ea), LockWasher (MA-393186) (4 ea), Plain Washer (MA-393185) (4 ea), and Nut (MA-393184)(2 ea).

8.5.3 Install Lower Support Cross Bar (MD-390238)(1 ea) with Spacer Bushing (MB-390577) (2 ea) using Bolt (MA-393183 (2 ea), LockWasher (MA-393186) (4 ea), Plain Washer (MA-393185) (4 ea), and Nut (MA-393184)(2 ea).

8.5.4 Install the Upper Bridge (ME-390240) to the Upper Support Bar using Bolt (MA-393187) (7 ea), Lock Washer (MA-393061) (7ea), and Flat Washer (MA-393060) (7ea).

8.5.5 Install the Lower Bridge (ME-390241) to the Lower Support Bar using Bolt (MA-393187) (7 ea), Lock Washer (MA-393061) (7ea), and Flat Washer (MA-393060) (7ea).

8.5.6 Secure Upper Bridge to Cold Mass Collar with Bolt (MA-393191) (6 ea), Lock Washer (MA-393061) (6 ea), and Plain Washer (MA-393060) (6 ea).

8.5.7 Secure Upper Bridge to Cold Mass Collar with Bolt (MA-393191) (6 ea), Lock Washer (MA-393061) (6 ea), and Plain Washer (MA-393060) (6 ea).

8.5.8 Tighten all the Shipping Restraint Bolts.

Technician(s) _____ Date 12/2/04

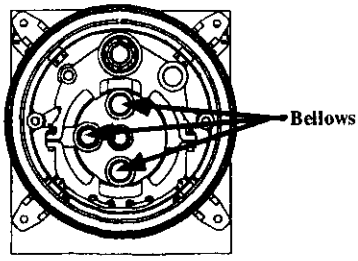

Q2 Magnet Non-IP End

8.6 Install Electrical Bus Shipping Restraint Short End Cover (MD-390752) into Lower Cold Mass Pipe to protect the Buss Wire.

8.7 Install Protective End onto PVC Bus Protector Tube.

8.8 Secure bellows with Bellow Restraint/Protective Cover (MA-390153) using Screws (MA-390180).

Technician(s) _____ Date 12/2/04

8.9 Install Protective Covers on flanges.

Technician(s) _____ Date 12/2/04

DR# HGQ-0512

8.10 Install Accelerometers as per MX-XXXXXX.

NO ACCELEROMETER FOR THIS MAGNET!

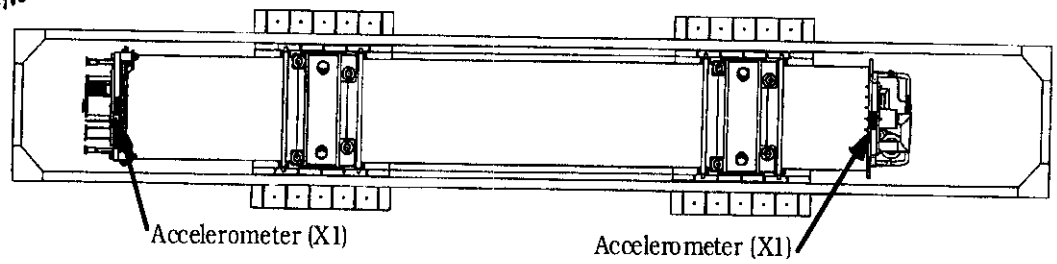

N/A
Technician(s)

Date

8.11 Install Magnet Identification Labels as per ME-390761.

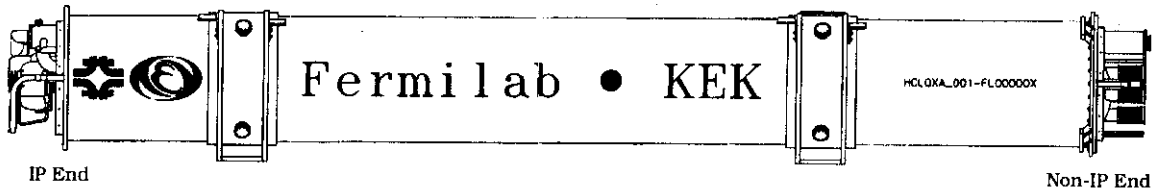

IP End

Non-IP End

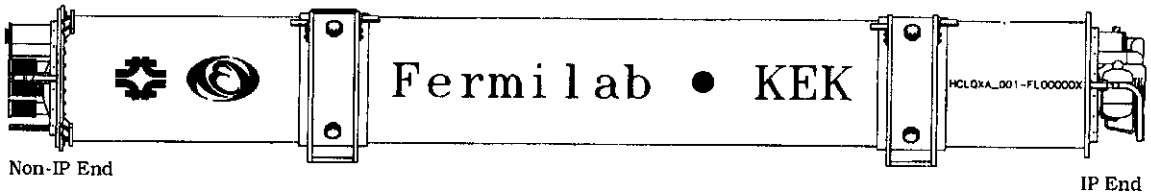

Non-IP End

IP End

Technician(s)

12/8/04
Date

8.12 Verify Magnet has been properly labeled/stenciled, and serial number matches the bottom of this traveler and as per ME-390761.

Lead Person

12/3/04
Date

9.0 Final Inspection/Installation

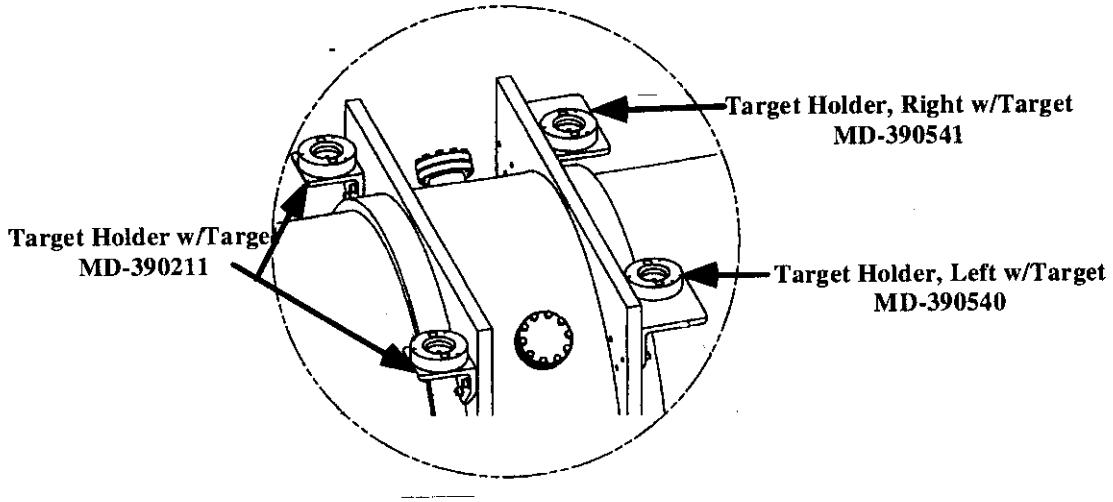

X 9.1 Verify Target Holder (MD-390211)(4 ea), Target Holder, Right (MD-390541)(2 ea), and Target Holder, Left (MD-390540)(2 ea) with Reference Cup (MA-390426)(8 ea) and Protective Cover (MX-XXXXXX) are installed.

Lead Person _____ Date 12/3/04

X 9.2 Verify that the Target Holder had been pinned using Roll Pins (MX-XXXXXX) as per Dwg MX-XXXXXX.

Lead Person _____ Date 12/3/04

10.0 Shipping the Magnet

☐ Check box if shipping frame is installed in Shipping Container.
Proceed to STEP 11.0

☒ If Shipping Frame is **NOT** installed already installed in a Shipping Container,
Proceed to STEP 10.1

Lead Person _____ Date 12/3/04

10.1 Acquire the Shipping Frame Assembly (ME-390729).

Technician(s) _____ Date 12/3/04

10.2 Verify that Frame Separator Bars are installed on the Shipping Frame Assembly. Refer To Q1/Q3 and Q2 Fixture Return Shipping Assembly Dwg ME-390798.

☒ Not Installed, proceed to Step 10.3. Verify Separator Bars are Ordered via Parts Kit. Contact Process Engineering Traveler Coordinator.

☐ Installed on Shipping Frame Assembly, Proceed to Step 10.4

Technician(s) _____ Date 12/3/04

10.3 Acquire the following parts.

Separator Bars	ME-390797	3 ea
Screw ½" – 13 X 3.5" l	MA-393384	6 ea
Washer, Flat ½"	MA-393325	6 ea
Washer, Bevel ½"	MA-393385	6 ea
Hex Nut ½" - 13	MA-393298	6 ea

Note: Ensure Q2 to Q1/Q3 Hardware is also acquired/installed for usage by CERN:

Screw ¾" -10 x 3.5"	MA-393384	4 ea	Installed on two end Separator Bars
Washer Flat ¾"	MA-393323	4 ea	Installed on two end Separator Bars
Hex Nut ¾"- 10	MA-393387	4 ea	Installed on two end Separator Bars
Screw 1"-8 x 4" long	MA393388	2 ea	Installed on center Separator Bar
Washer Flat 1"	MA 393389	2 ea	Installed on center Separator Bar
Hex Nut 1"-8	MA-393390	2 ea	Installed on center Separator Bar

Technician(s) _____ Date 12/3/04

10.4 Acquire the following shipping hardware:

Eyebolt	McMaster-Carr 3016T87	4 ea
Eyebolt	McMaster-Carr 3016T85	4 ea
Hex Nut	MA-393327	16 ea
Flat Washer	MA-393328	8 ea
Lock Washer	MA-393329	8 ea
Chain w/2 Hooks	MA-390702	4 ea
Mounting Bolts	MA-393321	6 ea
Flat Washer	MA-393323	6 ea
Lock Washer	MA-393322	6 ea

Technician(s) _____ Date 12/3/04

10.5 Remove the Hoist Rings (4 ea) from the Outer Frame as per ME-390727.

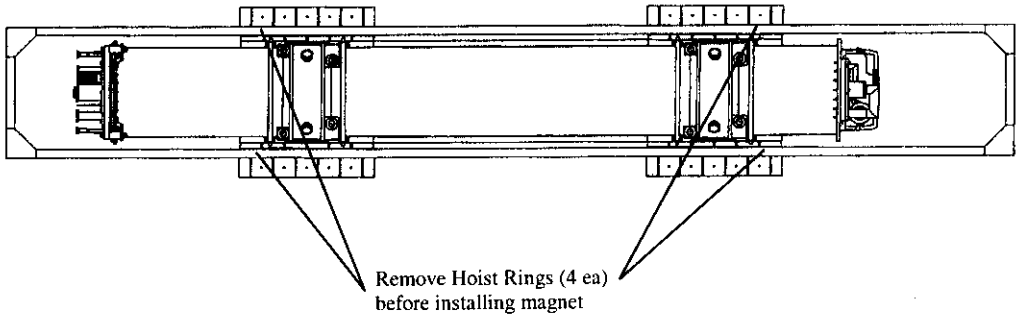

Technician(s) _____ Date 12-3-04

10.6 Transport the Shipping Frame Assembly (ME-390729) and install into the Shipping Container using approved methods.

Technician(s) _____ Date 12/3/04

11.0 Magnet to Shipping Frame/Platform Installation

11.1 Transport the magnet to the Magnet Shipping Fixture and install using Bolt (MA-393321)(6 ea), Flat Washer (MA-393323)(6 ea), and Lock Washer (MA-393322)(6 ea).
Torque bolts to XX FT/LBS.

Note: Apply a small amount of Anti-Seize (MX-XXXXXX) to all the bolt threads prior to installing the bolt.

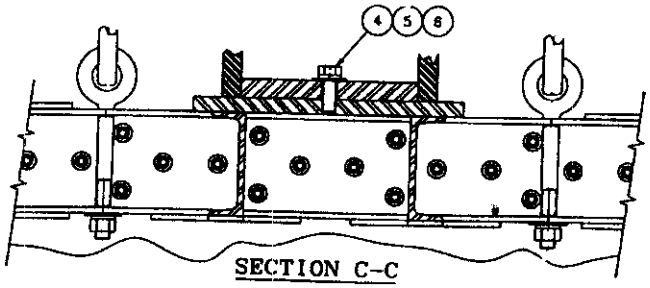

Q2 Shipping Assembly
ME-390710

11.2 Install Eyebolts, McMaster-Carr #3016T85 (4 ea), Eyebolts, McMaster Carr #3016T87 (4 ea), Flat Washer (MA-393328)(8 ea), and Lock Washer (MA-393329)(8 ea) into Shipping Fixture.

Note: Install all Eyebolts #3016T85 on one side of the shipping fixture. Eyebolts #3016T87 go on the opposite side.

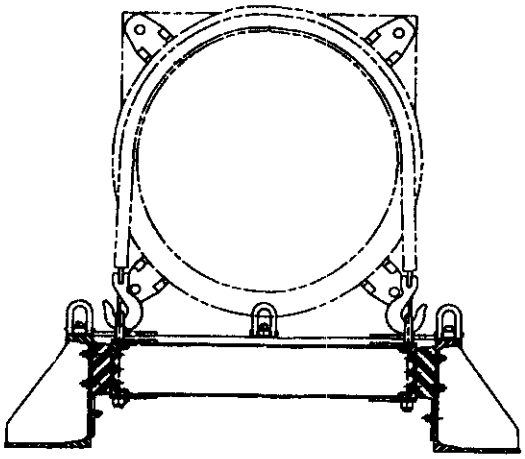

11.3 Install Lift All Pukka Wear Pad Protectors (MA-393345) onto magnet prior to installing Chain Sling.

E. [illegible] _____ 12-9-04
Technician(s) Date

11.4 Install chain sling w/2 hooks (MA-390702) (4 ea) into eyebolts

Technician(s) _____ Date 12-3-04

11.5 Tighten eyebolts until chains are snug.

Technician(s) _____ Date 12-3-04

11.6 Install an additional nut (double nutting) on each eyebolt and tighten.

Technician(s) _____ Date 12-3-04

TRR#1690

11.7 Wrapping of the magnet.

☐ Performed by Shipping Company, proceed to Step ~~12.0~~ 11.9 Shipping Company wrapped the Magnet but for this magnet Steve Gould helped which is why he signed it off. 1/28/05

☐ Performed by FermiLab, proceed to Step 11.8

Lead Person _____ Date 12/3/04

11.8 Wrap the magnet in protective material (VCI Plastic) and seal the seam using approved methods to form a protective bag.

Technician(s) _____ Date 12/3/04

11.9 Install cross braces on the top of the shipping container.

11.10 Install protective cover on the top of the shipping container and secure.

Technician(s) _____ Date 12-3-04

11.11 Verify the magnet, shipping frame are properly secured, and protected.

Responsible Authority/designee _____ Date 12/3/04

11.12 Close and secure doors on the shipping container.

Crew Chief _____ Date 12/3/04

12.0 Documentation Update

12.1 Perform the following:

Update DSR Keywords	☑
Location	☑
Location Verified Date	☑
Status	☑
Make entry regarding work performed.	☑

TD/E&F Production Supervisor/designee

12/3/04
Date

13.0 Production Complete

13.1 Process Engineering verify that the Traveler is accurate and complete. This shall include a review of all steps to ensure that all operations have been completed and signed off. Ensure that all Discrepancy Reports, Nonconformance Reports, Repair/Rework Forms, Deviation Index and dispositions have been reviewed by the Responsible Authority for conformance before being approved.

Comments:

Process Engineering/Designee

~~JAN 2 8 2005~~
Date

FEB 0 1 2005

TD - Engineering Fabri tion Component Kit List

ORIGINAL

Process Engineering

Component Serial No.: LQXA04
Kit submitted by: Bob Jensen
Fermi ID No.: 315
Date submitted: 8-Nov-04
Need date: 10-Nov-04
Deliver to: IB#2
Use with Traveler No.: 333728 B
Job No.: 248
M&S task number: 300 1.1.1.3.5
Drawing Title: LHC IR Quad Q1 Shipping Assembly
Drawing No.: ME-390727 0

Material Control

Parts available

Verified by: Marsha Schmidt MS
Fermi ID No.: 04423N
Date submitted to stockroom: 11/16/2004

Parts issued

Issued by: [signature]
Fermi ID No.: 12698
Date issued: 11/23/04
Parts received by E&F: Bob Jensen
Fermi ID No.: 0315
Date received by E&F: 11/23/04

	Description	Dwg Size	Number	Rev	Unit	Quantity Required	Location	Quantity Issued	E&F Verified	Routing Form Number	Spares Number / Comment
1	Kapton Tape	A	106723	A	ea	a/r					
2	¾" Black Shrink Tubing	A	318797	A	ea	a/r					
3	Q1 Cryostat - General Assembly	E	390127	G	ea	1		ICB has			
4	Q1/Q3 Shipping Restraint Assembly	E	390250	A	ea	1		ICB has			
5	Q1 IP-End Shipping Restraint Assembly	E	390251	0	ea	1		ICB has			
6	Chain Sling w/2 Hooks	A	390702	0	ea	4	R8,2,4	4	✓	81316	8 pcs.
7	Q1/Q3 Shipping Fixture	E	390729	0	ea	1		ICB has			
	3/4-10 Hex Hd. Bolt x 2.50 Lg. - Gr. 8 Stl.	A	393321	0	ea	6	IB4 Bin	6	✓	81277	29 pcs.
	3/4 Lock Washer - Stl.	A	393322	0	ea	6	IB4 Bin	6	✓	81278	29 pcs.
10	3/4 Flat Washer - Stl.	A	393323	0	ea	6	IB4 Bin	6	✓	81279	25 pcs,
11	1"-8 Hex Nut - Stl.	A	393327	0	ea	16		ICB has			
12	1" Flat Washer - Stl.	A	393328	0	ea	8		ICB has			
13	1" Lock Washer - Stl.	A	393329	0	ea	8		ICB has			

TD - Engineering Fabri tion Component Kit List

ORIGINA

	Description	Dwg Size	Number	Rev	Unit	Quantity Required	Location	Quantity Issued	E&F Verified	Routing Form Number	Spares Number / Comment
14	Lift All Pukka Wear Pad Protectors	A	393345	0	ea	4	R11,1,1	4	✓	81594	8 pcs.
15	Eyebolt - 1"-8 x 12" Lg.		390731-11		ea	4		ICB has			
16	Eyebolt - 1"-8 x 9" Lg.		390731-7		ea	4		ICB has			
17	Anti-Seize				ea	a/r		ICB has			
18											
19	Accelerometer				ea						
20	Bellows Protectors	MA	390153		ea	6		ICB has			
21	Screws	MA	393180		ea	18		ICB has			
22	Electrical Bus Short End Cover	MD	390752	0	ea	1	R7,3,4	1	✓	81802	23 pcs.
23											
24											

Traveler Title: LHC Q1 LQXA Cryostat Shipping Traveler

Specification No: 5520-TR-333728

Revision: C

DR No: HGQ-0512

Step No: 8.10

Drawing No: 390727

Routing Form No:

Serial No: LQXA04

Rework ID: 0

Discrepancy Description:

The accelerometers were not installed on this magnet.

SCANNED
JAN 28 2005

Originator: Steve Gould

Date: 12/3/2004

Cause of Nonconformance:

None at FNAL to install. All shock recorders are at CERN.

Responsible Authority: Thomas Page

Date: 12/6/2004

Disposition:

Ship magnet without shock recorder.

Responsible Authority: Thomas Page

Date: 12/6/2004

Corrective Action to Prevent Recurrence:

Add line in traveler asking if shock recorder was installed. Put Yes / No check boxes. Note: This won't prevent the magnet from being shipped with/without a shock recorder, it will prevent another DR from being written. (TRR No. 1690, 1706 & 1708)

Responsible Authority: Thomas Page

Date: 12/6/2004

Corrective Action/Disposition Verified By: John Szostak

Date: 1/19/2005

Will Configuration be affected?: ☐ YES ☑ NO

Identified problem area:

☑ Material ☐ Manpower ☐ Method ☐ Machine ☐ Measurement

Reviewed By: Bob Jensen

Date: 1/20/2005

Revision Request Control Number: 1690

Specification Number: 5520 - TR - 333728 Current Revision: C

Traveler or Document Title LHC Q1 LQXA Cryostat Shipping Traveler

Step #/Description of Revision:

1.4 Removed Step. "All personnel performing steps in this traveler must have documented training for this traveler and associated operating procedures."
1.6 Added Step. "Protect the bellows during all stages of production." DR No. HGQ-0500.
8.10 Modified Step. Changed to "Are Accelerometers (Shock Recorders) available for installation? Yes - Install Accelerometers as per Responsible Authority and Figure 8.10-A. below. No - Accelerometers are NOT available for installation." DR No. HGQ-0512.
11.7 Modified Step. Changed first checkbox to "Performed by Shipping Company, proceed to Step 11.9" per LQXA04.

John Szostak	Jim Rife	12/7/2004
Originator	Responsible Authority	Date

Revision Incorporated into the Traveler:

Revision Incorporated By	Date

Process Engineering Final Review:

Process Engineering/Designee	Date

Instructions for the completion of the Revision Request Form

Note(s):

Multiple steps may be effected by one Revision Request Form but only one specific Traveler or Document may be effected by each Revision Request Form.

If completing this form by hand, a Revision Request Control Number must be obtained before processing.

If completing this form entirely by electronic means, the printed copy to be filed in the Process Engineering Office is to be initialed by the individual incorporating the Revision Request and the individual who reviewed the Traveler or Document.

Originator Instructions:

1) Specification Number: - Enter the Specification Number of the Traveler or Document to be revised. (Document title is inserted automatically from the spec. #)

2) Current Revision: - Enter the Revision of the Traveler or Document to be revised.

3) Step# / Description of the Revision: - Enter a description of the revision to be made and the step# it applies to, if applicable. If needed to describe the revision attach a copy of the page(s). If the revision is coming from a related document such as a Discrepancy Report or an Engineering Order attach a copy of that document to the Revision Request Form.

4) Originator: - Originator is the person generating the form. (Select Name from List)

5) Responsible Authority: - Responsible Authority is person responsible for the process in question. (Select Name from List)

Process Engineering Office Instructions:

1) Revision Incorporated into the Traveler: - Signature of the individual who incorporated the revision.

2) Process Engineering Final Review: - Review the Traveler or Document revised, sign and date the form. The original completed Revision Request Form will be retained by the Process Engineering Office in the Revision Request Binder.