Thermometer References for LQXA06

Magnet #	**LQXA06**		
KEK Magnet #	MQXA06		
Corrector Serial #	HCMCBX_001-SI0000024		
Thermometers			Expedition Resistance-CERN
Q1 NLE - Inst Bus Side	CX_LS_X16773	**TT8321**	67.315
Q1 NLE - Non-Inst Bus Side	CX_LS_X16853	**TT8311**	69.49
Collection Tank Thermometers			Expedition Resistance-CERN
Top Set Top Thermometer	CX_LS_X14531	**N/A**	59.88
Top Set Bottom Thermometer	CX_LS_X14572	**N/A**	61.09
Bottom Set Top Thermometer	CX_LS_X14559	**N/A**	60.76
Bottom Set Bottom Thermometer	CX_LS_X14535	**N/A**	57.52

Q1 Lm qXA 06

Cryogenic Thermometer Traveller

Copy

DESCRIPTION

Part description:	Cryogenic thermometer	**Top Assembly Identification:**	
Part Identification:	HCQITESCXT-CR012800		
Serial Number:	CX_LS_X16853	**Manufactured By:**	Fermilab

CABLING

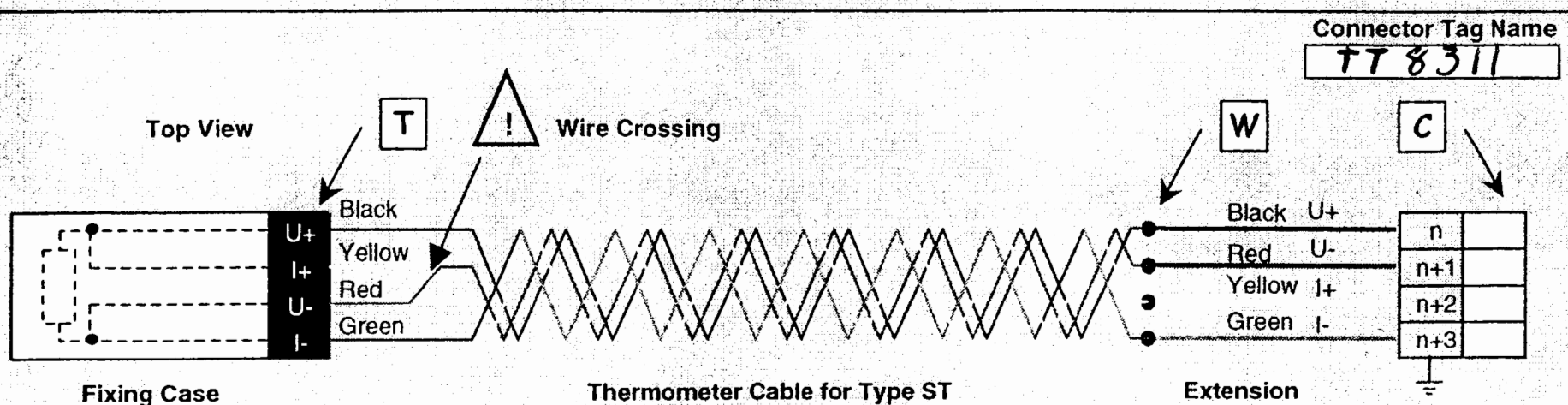

Fixing Case

Thread ☐
Hole ☐
Stud ☐

Thermometer Cable for Type ST

ρ (300 K) = 0.32 Ohm/m
Copper AWG 30
Length = ☐ m

Extension

ρ (300 K) = 0.07 Ohm/m
Copper AWG 24
Length: 0.8 m

CHECKS

Intervention	Date/ DD-MMM-YYYY	Check Point	R(U+,U-,I+,I-) [Ohm] 4W	R(U-,I-) [Ohm] 2W	R(U+,I+) [Ohm] 2W	R(U+,GND) [Ohm] 2W	Temperature [K]	Firm/Laboratory	Checked by
Calibration	*21-Jan-2002*	T	*71.09*	*n.a*	*n.a*	*OVL*	*Ambient*	*IPN*	*Joly*
Expedition	*12-Mar-2003*	T	*69.490*	*0.1*	*0.1*	*OVL*	*293*	*CERN*	*Grivat*
Reception		T W C	71.91					Fermi	Evans
		T W C							
		T W C							
		T W C							
		T W C							
		T W C							
		T W C							
		T W C							
		T W C							
		T W C							
		T W C							
		T W C							
		T W C							
		T W C							
		T W C							
		T W C							
		T W C							
		T W C							
		T W C							
		T W C							
		T W C							
		T W C							
		T W C							
		T W C							
		T W C							

Q1 LMQXA 06

Cryogenic Thermometer Traveller

copy

DESCRIPTION

Part description:	Cryogenic thermometer	**Top Assembly Identification:**	
Part Identification:	HCQITESCXT-CR012420		
Serial Number:	CX_LS_X16773	**Manufactured By:**	Fermilab

CABLING

Connector Tag Name TT 8321

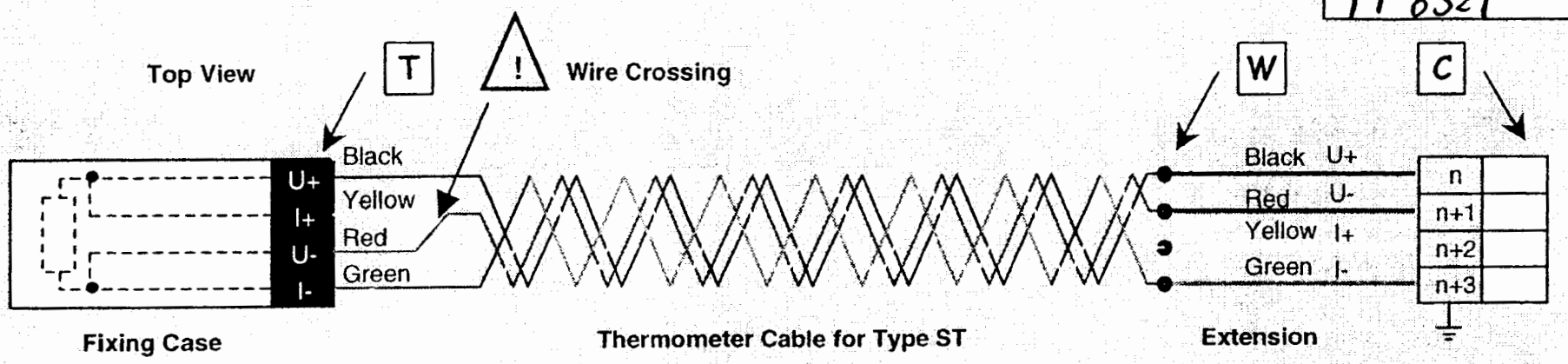

Fixing Case

Thread ☐
Hole ☐
Stud ☐

Thermometer Cable for Type ST

ρ (300 K) = 0.32 Ohm/m

Copper AWG 30

Length = ☐ m

Extension

ρ (300 K) = 0.07 Ohm/m

Copper AWG 24

Length: 0.8 m

CHECKS

Intervention	Date/ DD-MMM-YYYY	Check Point	R(U+,U-,I+,I-) [Ohm] 4W	R(U-,I-) [Ohm] 2W	R(U+,I+) [Ohm] 2W	R(U+,GND) [Ohm] 2W	Temperature [K]	Firm/Laboratory	Checked by
Calibration	*21-Jan-2002*	T	*68.33*	*n.a*	*n.a*	*OVL*	*Ambient*	*IPN*	*Joly*
Expedition	*12-Mar-2003*	T	*67.315*	*0.1*	*0.1*	*OVL*	*293*	*CERN*	*Grivat*
Reception		T W C	69.499					Fermi	Evans
		T W C							
		T W C							
		T W C							
		T W C							
		T W C							
		T W C							
		T W C							
		T W C							
		T W C							
		T W C							
		T W C							
		T W C							
		T W C							
		T W C							
		T W C							
		T W C							
		T W C							
		T W C							
		T W C							
		T W C							
		T W C							
		T W C							
		T W C							
		T W C							

Cryogenic Thermometer Traveller

DESCRIPTION*

Part Description:	Cryogenic thermometer	**Instrument Name:**	
CERN Part Identifier:	HCQITELCXT-CR002490	**Top Assembly:**	
Other Identification:	CX_LS_X14531	**Functional Equipment Identifier:**	

* In accordance with LHC-QIT-QA-0002

Top - Top LMQXA 06

CABLING

Connector Tag Name

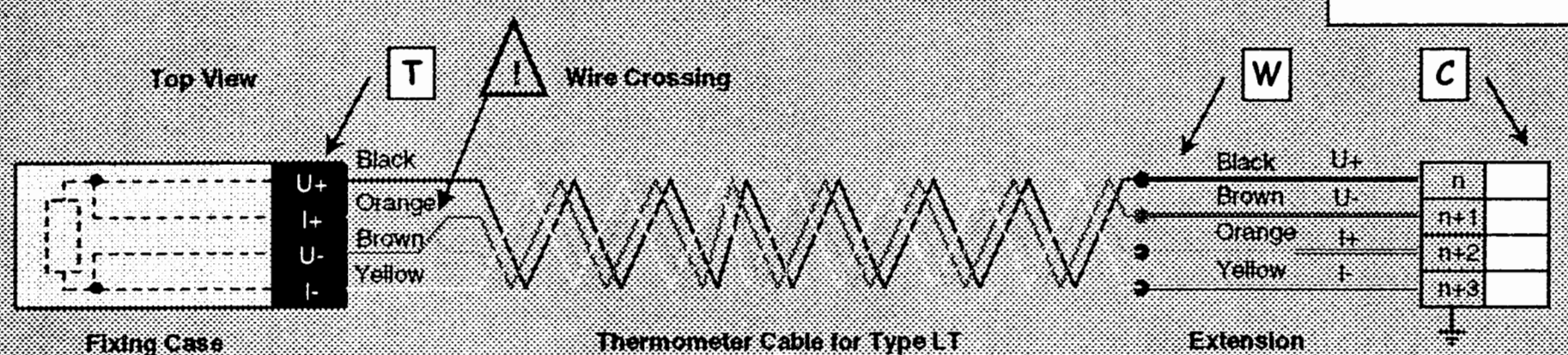

Fixing Case

Thread ☐ Stud ☐
Hole ☐ Pipe ☐

Thermometer Cable for Type LT

ρ (300 K) = 38 Ohm/m
Manganin AWG 36
Length = ☐ m

Extension

ρ (300 K) = 0.07 Ohm/m
Copper AWG 24
Length: 5 cm

CHECKS

Intervention	Date DD-MMM-YYYY	Check Point	R(U+,U-,I+,I-) [Ohm] 4W	R(U-,I-) [Ohm] 2W	R(U+,I+) [Ohm] 2W	R(U+,GND) [Ohm] 2W	Temperature [K]	Firm/Laboratory	Checked by
Calibration	*29-Jun-2001*	T	*58.60*	*16.51*	*16.48*	*OVL*	*300*	*IPN*	*Joly*
Expedition	*15-Sep-2003*	T	*59.88*	*16.51*	*16.48*	*OVL*	*293.00*	*CERN*	*Vauthier*
Reception	25-Apr-2005	T W C	60.251					Fermi	Evans
		T W C							
		T W C							
		T W C							
		T W C							
		T W C							
		T W C							
		T W C							
		T W C							
		T W C							
		T W C							
		T W C							
		T W C							
		T W C							
		T W C							
		T W C							
		T W C							
		T W C							
		T W C							
		T W C							
		T W C							
		T W C							
		T W C							
		T W C							

Cryogenic Thermometer Traveller

DESCRIPTION*

Part Description:	Cryogenic thermometer	**Instrument Name:**	
CERN Part Identifier:	HCQITELCXT-CR002740	**Top Assembly:**	
Other Identification:	CX_LS_X14572	**Functional Equipment Identifier:**	

* In accordance with LHC-QIT-QA-0002

Top - Bottom LmQXA06

CABLING

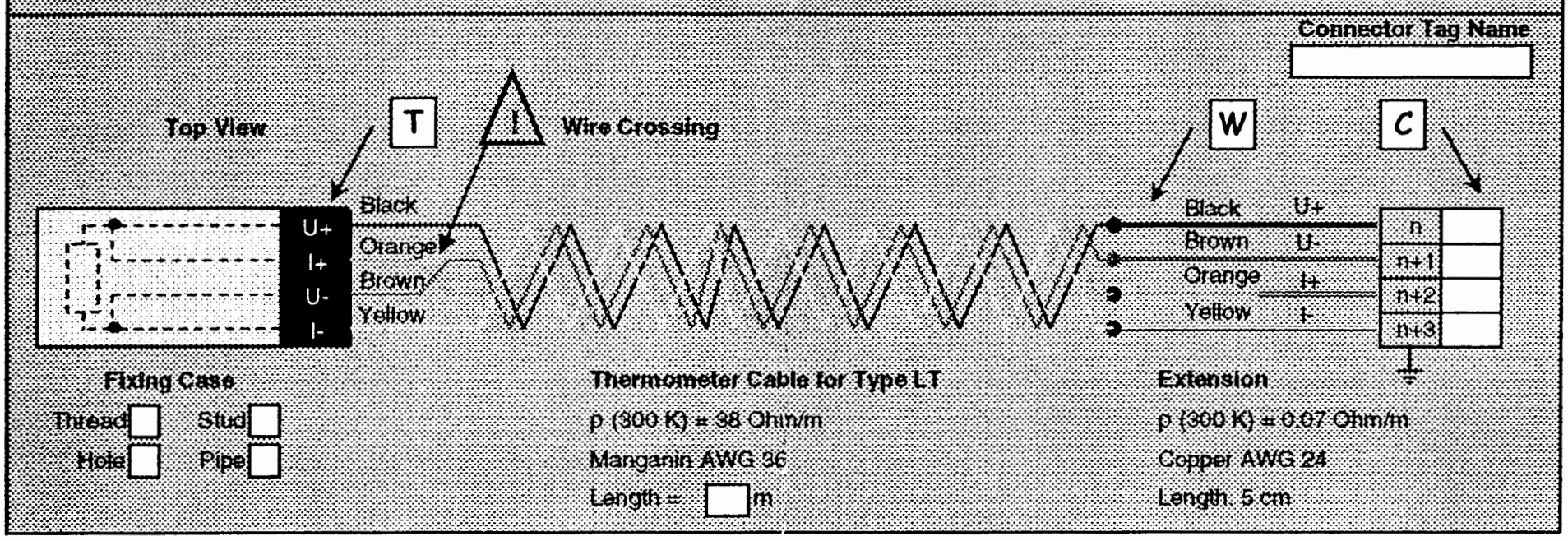

CHECKS

Intervention	Date/ DD-MMM-YYYY	Check Point			R(I+,U+,I-,I-) [Ohm] 4W	R(U+,I+) [Ohm] 2W	R(U-,I-) [Ohm] 2W	R(U+,GND) [Ohm] 2W	Temperature [K]	Firm/Laboratory	Checked by
Calibration	*29-Jun-2001*	T			*59.70*	*17.60*	*17.60*	*OVL*	*300*	*IPN*	*Joly*
Expedition	*15-Sep-2003*	T			*61.09*	*17.60*	*17.60*	*OVL*	*293.00*	*CERN*	*Vauthier*
Reception	25-Apr-2005	T	W	C	61.371					Fermi	Evans
		T	W	C							
		T	W	C							
		T	W	C							
		T	W	C							
		T	W	C							
		T	W	C							
		T	W	C							
		T	W	C							
		T	W	C							
		T	W	C							
		T	W	C							
		T	W	C							
		T	W	C							
		T	W	C							
		T	W	C							
		T	W	C							
		T	W	C							
		T	W	C							
		T	W	C							
		T	W	C							
		T	W	C							
		T	W	C							
		T	W	C							
		T	W	C							
		T	W	C							

Cryogenic Thermometer Traveller

DESCRIPTION*

Part Description:	Cryogenic thermometer	Instrument Name:	
CERN Part Identifier:	HCQITELCXT-CR002660	Top Assembly:	
Other Identification:	CX_LS_X14559	Functional Equipment Identifier:	

* In accordance with LHC-QIT-QA-0002

Bottom – Top LMQXA 06

CABLING

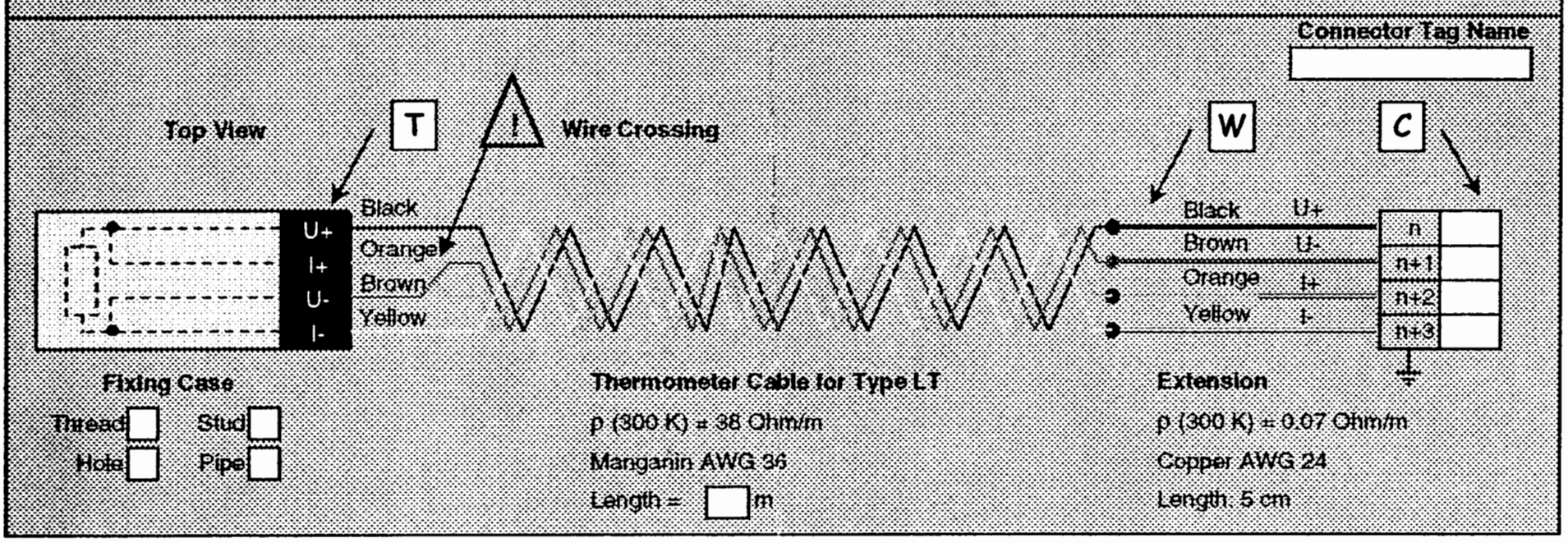

CHECKS

Intervention	Date/ DD-MMM-YYYY	Check Point			R(I+,U+,I-,I-) [Ohm] 4W	R(U-,I-) [Ohm] 2W	R(U+,I+) [Ohm] 2W	R(U+,GND) [Ohm] 2W	Temperature [K]	Firm/Laboratory	Checked by
Calibration	29-Jun-2001	T			59.30	17.05	16.90	OVL	300	IPN	Joly
Expedition	15-Sep-2003	T			60.76	17.05	16.90	OVL	293.00	CERN	Vauthier
Reception	25-Apr-2005	T	W	C	60.98					Fermi	Evans
		T	W	C							
		T	W	C							
		T	W	C							
		T	W	C							
		T	W	C							
		T	W	C							
		T	W	C							
		T	W	C							
		T	W	C							
		T	W	C							
		T	W	C							
		T	W	C							
		T	W	C							
		T	W	C							
		T	W	C							
		T	W	C							
		T	W	C							
		T	W	C							
		T	W	C							
		T	W	C							
		T	W	C							
		T	W	C							
		T	W	C							
		T	W	C							

Cryogenic Thermometer Traveller

DESCRIPTION*

Part Description:	Cryogenic thermometer	**Instrument Name:**	
CERN Part Identifier:	HCQITELCXT-CR002500	**Top Assembly:**	
Other Identification:	CX_LS_X14535	**Functional Equipment Identifier:**	

* In accordance with LHC-QIT-QA-0002

Bottom - Bottom LMQXA 06

CABLING

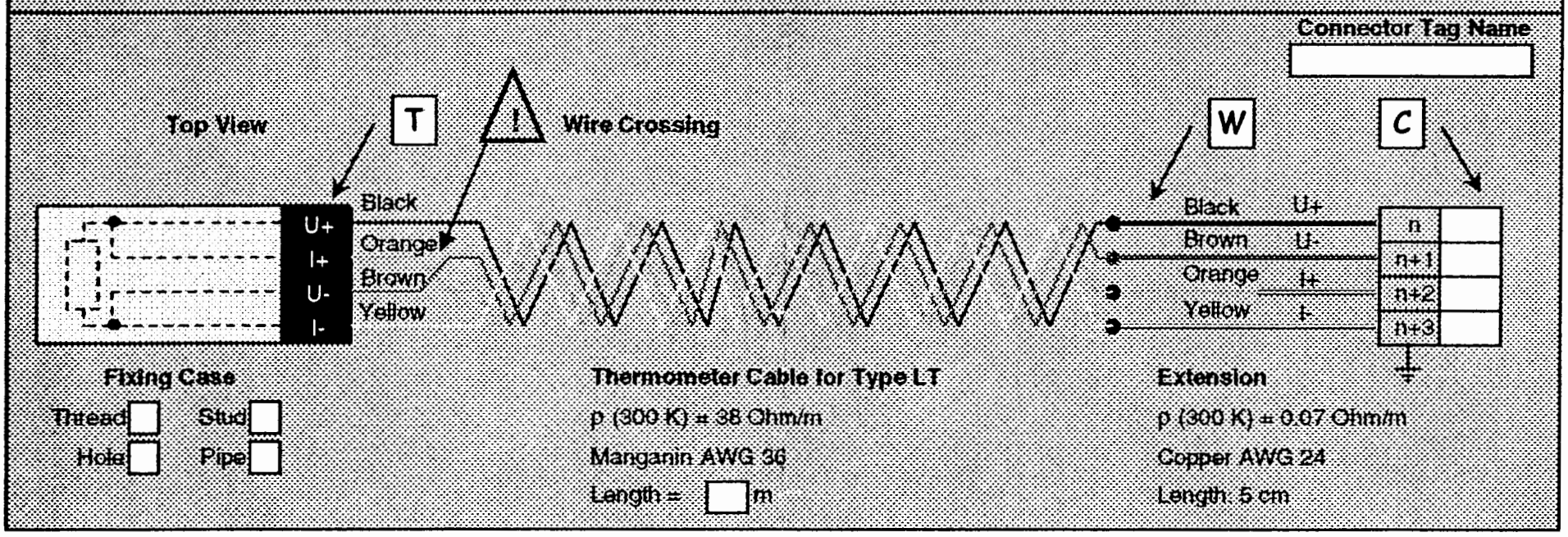

CHECKS

Intervention	Date/ DD-MMM-YYYY	Check Point			R(U+,U-,I+,I-) [Ohm] 4W	R(U+,I-) [Ohm] 2W	R(U-,I+) [Ohm] 2W	R(U+,GND) [Ohm] 2W	Temperature [K]	Firm/Laboratory	Checked by
Calibration	*29-Jun-2001*	T			*56.30*	*17.35*	*17.30*	*OVL*	*300*	*IPN*	*Joly*
Expedition	*15-Sep-2003*	T			*57.52*	*17.35*	*17.30*	*OVL*	*293.00*	*CERN*	*Vauthier*
Reception	25-Apr-2005	T	W	C	57.863					Fermi	Evans
		T	W	C							
		T	W	C							
		T	W	C							
		T	W	C							
		T	W	C							
		T	W	C							
		T	W	C							
		T	W	C							
		T	W	C							
		T	W	C							
		T	W	C							
		T	W	C							
		T	W	C							
		T	W	C							
		T	W	C							
		T	W	C							
		T	W	C							
		T	W	C							
		T	W	C							
		T	W	C							
		T	W	C							
		T	W	C							
		T	W	C							
		T	W	C							