Document ID:

8979

LHC Q1 LQXA Cryostat Shipping Traveler

333728 / Rev. E

Job No: **389**

MSD Project/Task No.: **300/1.1.1.6.3**

M + S Project/Task No.: **300/1.1.1.6.3**

Place This Side Down For Scanning!!!

Magnet Travelers

LQXA09-0

Document ID:

8979

Job No.:

389

Project/Task No.

300/1.1.1.6.3

Series:

LQXA

Serial No:

LQXA09

Rework ID:

0

Specification No.:

333728

Revision:

E

LQXA09-0

Fermi National Accelerator Laboratory
Batavia, IL 60510

LARGE HADRON COLLIDER
Q1 - LQXA
SHIPPING TRAVELER

Reference Drawing(s):

Q1/Q3 Shipping Fixture Final Assembly (ME-390729)

Q1 Magnet Shipping Assembly (ME-390727)

Project/Task Number: *300/1.1.1.6.3*	**Job No. :** *389*
Released By: *Bob Jensen*	**Magnet/Device Series:** *LQXA*
Date Issued: *4/19/2006 8:37:09 AM*	**Scanned Pages:** 37
Prepared by: B. Jensen, J. Szostak	

Title	Signature	Date
TD / E&F Process Engineering	*Bob Jensen* Bob Jensen / Designee	*11/4/05*
TD / LHC Production Supervisor	*Jim Rife* Jim Rife / Designee	*11/4/05*
TD / LHC Production Engineer	*Rodger Bossert* Rodger Bossert / Designee	*11/4/05*
TD / LHC Project Engineer Cryostat	*Tom Nicol* Tom Nicol / Designee	*11/4/05*
TD / LHC Project Physicist	*Andy Hocker* Michael Lamm / Designee	*11/7/05*
TD / LHC Program Manager	*Jim Kerby* Jim Kerby / Designee	*11/7/05*

Revision Page (1 of 2)

Revision	Step No.	Revision Description	TRR No.	Date
None	N/A	Initial Release	N/A	8/10/04
A	3.0	Step 3.0 New step to perform a nitrogen purge.	1666	
	3.0	Step 3.0 Moved old Step 3.0 to become new Step 7.0		
	3.4	New Step 7.5 Deleted old diagram and added new		
	3.5	New Step 7.6 Updated diagram.		
	6.0	Corrected Q1 RTD label from TT8331 to TT8321in Table 6.0.1		
	6.0	Corrected Circuit A Label from HT1111- to YT1111- in Table 6.0.2		
	6.18	Added new step for Hipotting		
	10.0	Added information about Shipping w/check box		
	11.3	Deleted step to record serial number		
	11.7	Added Steps to verify protective bag installation responsibility/container assy		
	12.7	Deleted step		
	12.8	Moved to become new Step 7.4		
	13.3	Moved to become new Step 10.11		
B	8.7	Deleted second technician signoff line (duplicate)	1676	11/2/04
	8.1	Moved Step 8.10 to become new Step 8.1		
	11.8	Change from Fermi supplied material to (VCI Plastic)		
	11.9	Deleted step to; Hook-up a vacuum source and pump down the protective bag material.		
C	6.17	Added picture. Same as used in Step 7.1	1683	11/16/04
	7.5	Switched Step 7.5 with 7.6 and vice versa.		
	7.6	Added length measurement 342.5 mm		
	10.2	New step. Added check-off box to indicate Frame Separator Bars status.		
	10.3	New Step listing parts needed for Separator Bars.		
	10.6	New Step to install Shipping Frame into Shipping Container		
D	1.4	Removed Step. "All personnel performing steps in this traveler must have documented training for this traveler and associated operating procedures."	1690	5/12/05
	1.6	Added Step. "Protect the bellows during all stages of production." **DR No. HGQ-0500.**		
	3.3	Added Step. "Perform a Leak Check of the Q1 Cryostat Assembly." Per production request.		
	7.4	Added step. "Label the Leads "A" and "B" as per Figure 7.4-A below."		
	8.9	Modified Step. Changed to "Install the Vinyl Flange Covers (MA-390491), (MA-390492), (MA-390493), (MA-390494), & the Alignment Fiducial Covers (MA-390495)."		
	8.10	Modified Step. Changed to "Are Accelerometers (Shock Recorders) available for installation? ❒Yes - Install Accelerometers as per Responsible Authority and Figure 8.10-A. below. ❒No - Accelerometers are NOT available for installation." **DR No. HGQ-0512.**		
	11.7	Modified Step. Changed first checkbox to "Performed by Shipping Company, proceed to Step 11.9" per LQXA04.		
	11.8	Modified Step. Added "**(This step may be N/A. See check box in step 11.7)**"		

Revision Page (2 of 2)

Revision	Step No.	Revision Description	TRR No.	Date
E	4.0	Modified Steps. Added Step Numbers and instructions to each individual signoff.	1747	10/18/05
	7.5	Modified Step. Added Note "Protect the Bellows during all stages of production."		
	7.6	Modified Step. Changed to "With the Spider at the installed position, measure…" per LQXA06.		
	8.1	Modified Step. Added Note "Protect the Bellows during all stages of production."		
	8.8	Modified Step. Added Note "Protect the Bellows during all stages of production."		
	10.0	Modified Step. Changed Checkbox to "Check box if shipping frame is installed in Shipping Container. Proceed to STEP 10.2." per production request and LQXA06.		
	10.1	Modified Step. Changed to "Acquire the Shipping Frame Assembly (ME-390729). (May be N/A if 2nd box above is checked.)"		
	10.2	Modified Step. Changed to "Removed Check boxes per production request."		
	10.3	Modified Step. Changed to "Verify the following parts. Acquire as needed." per production request.		
	10.4	Modified Step. Changed to "Verify the following shipping hardware. Acquire as needed." per production request.		
	10.5	Modified Step. Changed to "Verify the Hoist Rings (4 ea) have been removed from the Outer Frame as per (ME-390727). Remove as needed." per production request.		
	4.0 to 13.0	Modified Steps. Changed step numbers to improve sequential numbering. The above changes were made before this change and thus reflect the old numberings.		

Ensure appropriate memos and specific instructions are placed with the traveler before issuing the sub traveler binder to production.

1.0 General Notes

1.1 All steps that require a sign-off shall include the Technician/Technician(s)s first initial and full last name.

1.2 No erasures or white out will be permitted to any documentation. All incorrectly entered data shall be corrected by placing a single line through the error, initial and date the error before adding the correct data.

1.3 All Discrepancy Reports issued shall be recorded in the left margin next to the applicable step.

1.4 Personnel shall perform all tasks in accordance with current applicable ES&H guidelines and those specified within the step.

1.5 Cover the product/assembly with Green Herculite (Fermi stock 1740-0100) when not being serviced or assembled.

1.6 Protect the Bellows during all stages of production.

2.0 Parts Kit List

2.1 Attach the completed Parts Kit for this production operation to this traveler. Ensure that the serial number on the Parts Kit matches the serial number of this traveler. Verify that the Parts Kit received is complete.

Process Engineering/Designee

4/19/06
Date

3.0 Magnet Electrical Preparation

3.1 Does magnet require a purge of compressed dry nitrogen (N_2)?

☒ YES, PURGE REQUIRED, Proceed to Step 3.2

☐ NO, PURGE NOT REQUIRED, Proceed to Step 3.3

STOP

Andy Hoo
Responsible Authority/Physicist

24-APR-2006
Date

3.2 If YES box was checked in Step 3.1, perform a required purge for a minimum of 2.5 days (3 days maximum) at a flow rate of 5 CFH of N_2.

	Purge Time	Purge Date	Purge Flow Rate
Start	14:30	4-24-06	20 CFH
Finish	08:30	4-27-06	

Technician(s)

4-26-06
Date

3.3 Perform a Leak Check of the Q1 Cryostat Assembly.

Part No.	DETERMINATION OF DETECTABLE LEAK						
_____	M.D.S. ÷ ((Response – Background) ÷ Leak value) = MDL						
OPERATOR'S LAST NAME	SCALE UNITS BEFORE HELIUM PROBE	SCALE UNITS WHILE ENCLOSURE FLOODING	MDS	Response	Background	Leak Value	MDL
						_____ x E $^{-8}$	_____ x E $^{-}$ ___

_____ Technician(s)

_____ Date

_____ Responsible Authority/Physicist

_____ Date

4.0 Final Electrical Inspection

Perform an electrical inspection on each of the Magnet Halves and complete Magnet. Refer to the Valhalla and Leader Free Standing Coil Measurement Procedure (ES-292306).

To measure the Resistance of the Q1 Cold Mass:

1. Use Valhalla Scientific 4300B Digital Micro-Ohmmeter.
2. Set Test Current to .1 Amp
3. Set Scale to 2V full scale.
4. Turn temperature compensation on.
5. Turn test current off.
6. Connect I_{HI} to 'A' Power Lead (Quadrant #4) inner power lead as shown in Step 3.4.
7. Connect I_{LO} to 'B' Power Lead (Quadrant #3) inner power lead as shown in Step 3.4.
8. Turn test current on.
9. Connect V_{HI} and V_{LO} to voltage taps as shown in resistance table.
10. Read resistance and record in traveler.

Q1 Cold Mass Electrical Measurements

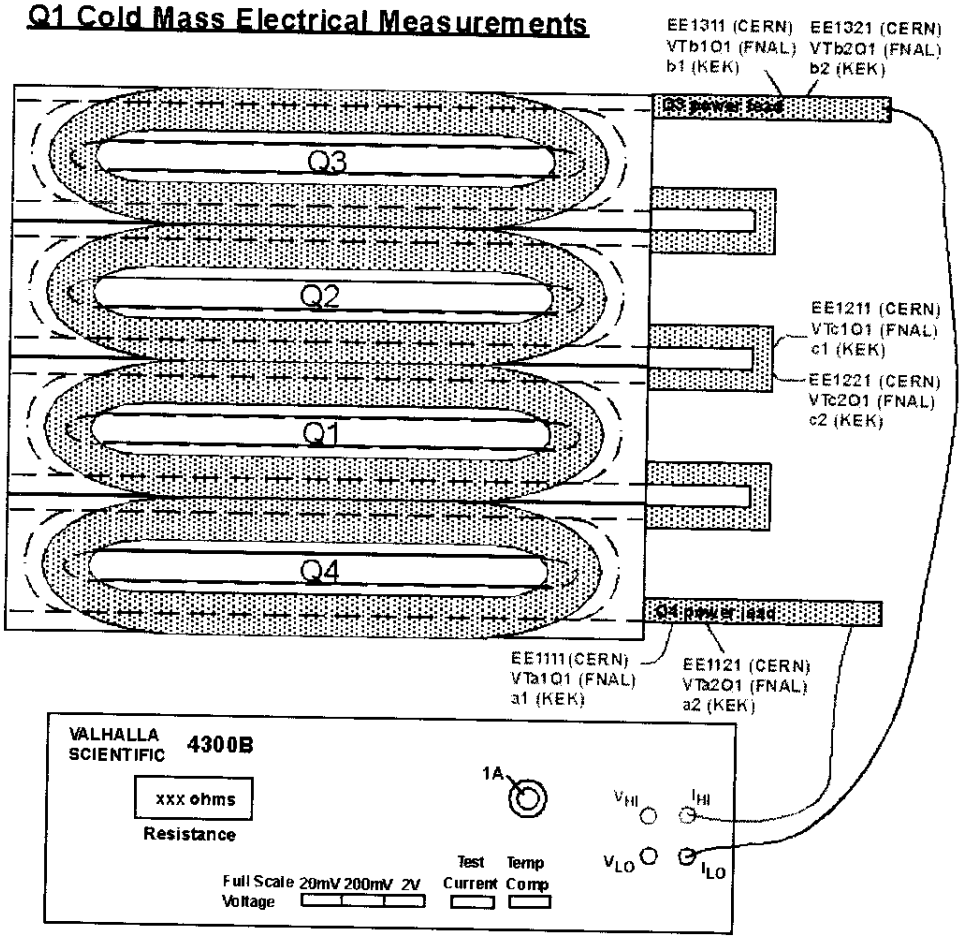

4.1 Measure the Resistance of the Q1 Cold Mass.

(Q1) Resistance				Nominal 3.35 to 3.45 Ω
				Total Resistance
Connect	Fermi	CERN	KEK	
V_{HI}	VTa1Q1	EE1111	a1	3.418 Ω
V_{LO}	VTc1Q1	EE1211	c1	
V_{HI}	VTc1Q1	EE1211	c1	3.423 Ω
V_{LO}	VTb1Q1	EE1311	b1	

				Total Resistance with Leads
				Nominal 6.75 to 6.85 Ω
V_{HI}	VTa1Q1	EE1111	a1	6.842 Ω
V_{LO}	VTb1Q1	EE1311	b1	
V_{HI}	Q4 Power Lead			6.846 Ω
V_{LO}	Q3 Power Lead			

Technician(s) _____ Date 4-27-06

4.2 Measure the resistance of Redundant Voltage Taps.

Q1 Redundant Voltage Taps				Nominal 3.35 to 3.45 Ω
Connect	Fermi	CERN	KEK	Resistance
V_{HI}	VTa2Q1	EE1121	a2	3.419 Ω
V_{LO}	VTc2Q1	EE1221	c2	
V_{HI}	VTc2Q1	EE1221	c2	3.424 Ω
V_{LO}	VTb2Q1	EE1321	b2	

Technician(s) _____ Date 4-27-06

Measure Ls and Q of a Q1 Cold Mass:

1. Use Agilent 4263B LCR Meter.
2. Turn power on by pushing line button. Wait 30 seconds until display screen is lit.
3. Recall program #1. To do this, push recall (Rcl), then push #1, then push Enter.
4. Push Auto/Hold button to release hold.
5. Verify that the frequency displayed in the upper right corner of the display screen is 1000 Hz and the level recorded in the lower right corner of the display screen is 1V or 1000 mV.
6. Connect H_{cur} to 'A' Power Lead (Quadrant #4) as shown in Step 3.4.
7. Connect L_{cur} to 'B' Power Lead (Quadrant #3) as shown in Step 3.4.
8. Connect H_{pot} and L_{pot} to voltage taps as shown in Ls and Q tables.
9. Read Ls and Q from display and record in traveler.

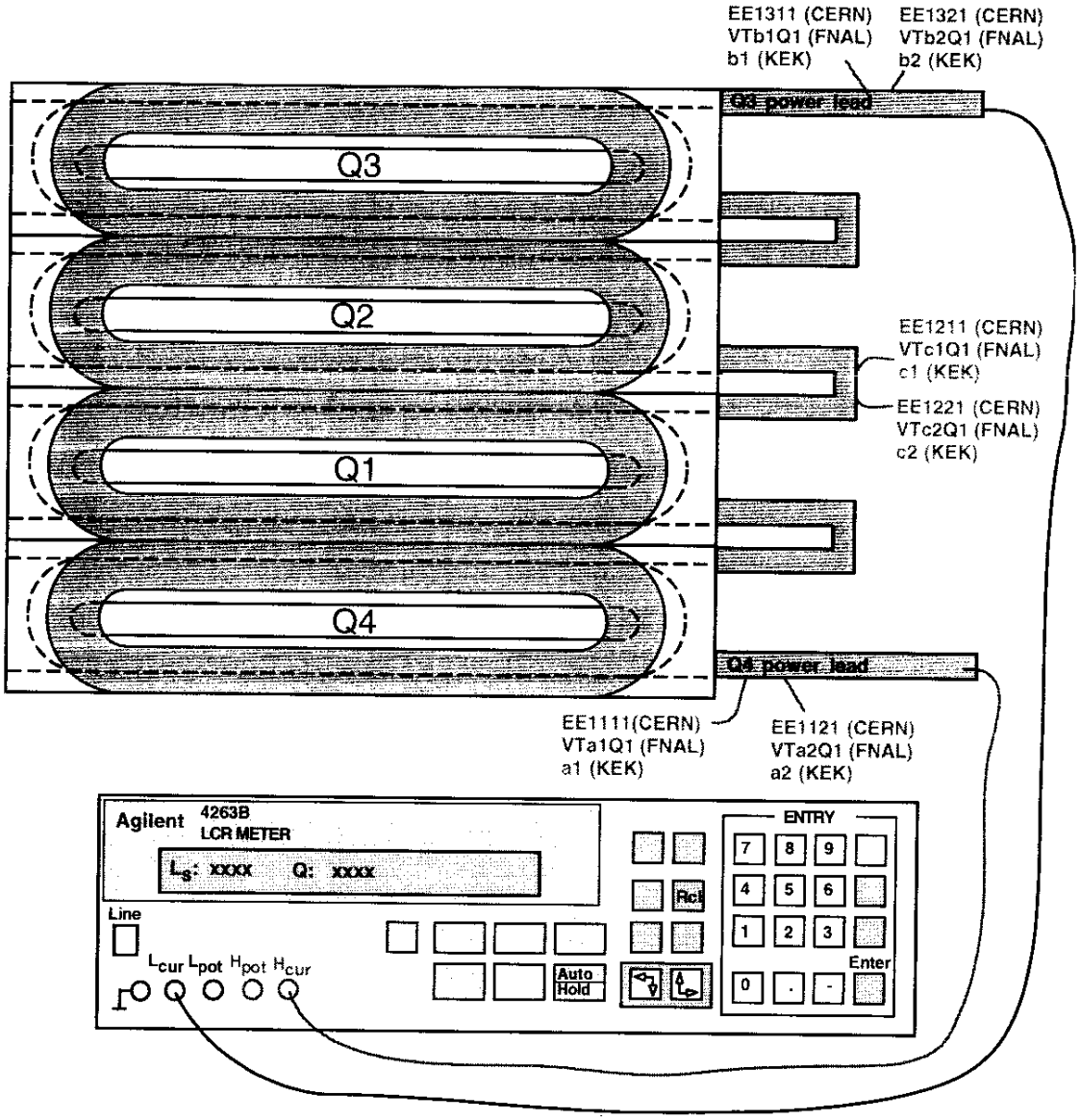

4.3 Measure the Inductance (Ls) of a Q1 Cold Mass.

(Q1) Inductance				Nominal 15 to 16 mH Total Inductance
Connect	Fermi	CERN	KEK	
H_{POT}	VTa1Q1	EE1111	a1	~~3.418~~ 15.429 mH
L_{POT}	VTc1Q1	EE1211	c1	
H_{POT}	VTc1Q1	EE1211	c1	~~3.425~~ 15.412 mH
L_{POT}	VTb1Q1	EE1311	b1	

				Nominal 30 to 32 mH Total Inductance
H_{POT}	VTa1Q1	EE1111	a1	~~6.842~~ 30.834 mH
L_{POT}	VTb1Q1	EE1311	b1	

Technician(s) 4-27-06 Date

4.4 Measure the Q-Factor (Q) of a Q1 Cold Mass.

(Q1) Q-Factor				Nominal 1.0 to 1.2 Total Q
Connect	Fermi	CERN	KEK	
H_{POT}	VTa1Q1	EE1111	a1	1.1
L_{POT}	VTc1Q1	EE1211	c1	
H_{POT}	VTc1Q1	EE1211	c1	1.1
L_{POT}	VTb1Q1	EE1311	b1	

				Nominal 1.0 to 1.2 Total Q
H_{POT}	VTa1Q1	EE1111	a1	1.1
L_{POT}	VTb1Q1	EE1311	b1	

Technician(s) 4-27-06 Date

To measure the resistance of a Thermometer (RTD):

1. Use Hewlett Packard HP3457A digital multimeter.
2. Record temperature of building within +/- 5 degrees.
3. Press line button to turn line on.
4. Connect wires as shown in Figure below.
   U+ (Black) to Sense HI
   I+ (Yellow) to Input HI
   U- (Red) to Sense LO
   I- (Green) to Input LO
5. Push blue button (function key) once.
6. Push OHMF button.
7. Verify arrow in readout is above the 4WΩ (meaning a 4 wire resistance measurement).
8. Read resistance in ohms and record in traveler.

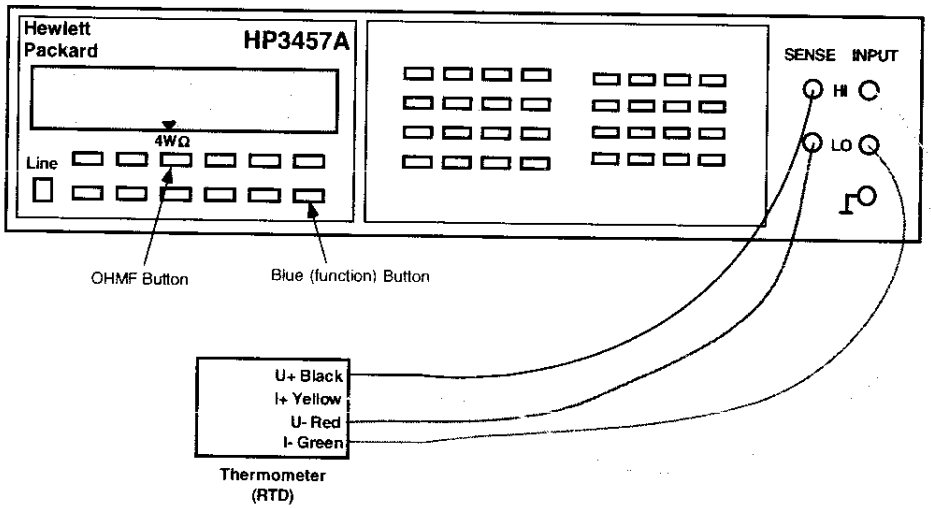

To measure the resistance of a Cryogenic (Warm-up) Heater

1. Use Hewlett Packard HP3457A digital multimeter.
2. Record temperature of building within +/- 5 degrees.
3. Press line button to turn line on.
4. Connect wires as shown in Figure below.
5. Push blue button (function key) once.
6. Push OHMF button.
7. Verify arrow in readout is above the 4WΩ (meaning a 4 wire resistance measurement). **Note: Although this is technically a 4 wire measurement, it is effectively a 2 wire measurement, since there are only 2 wires connected to each heater.**
8. Read resistance in ohms and record in traveler.

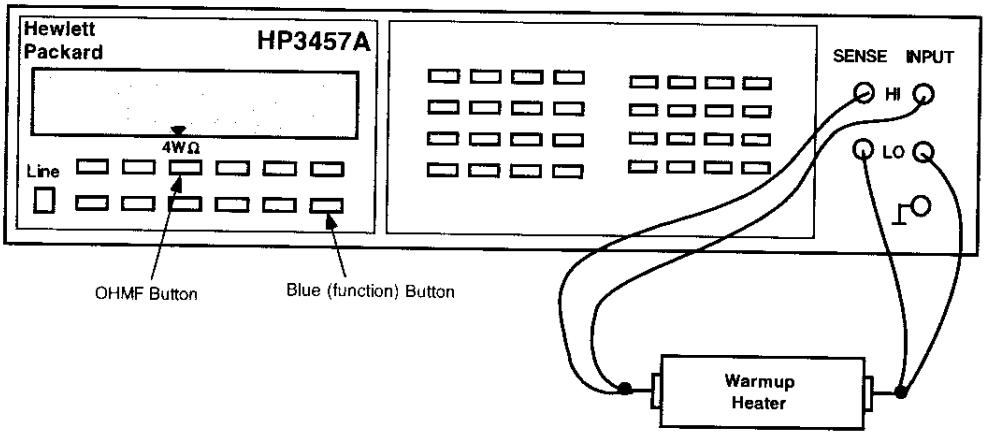

4.5 Measure the resistance of the RTD's and Cryogenic (Warm-up) Heaters. Record MFR Resistance (Expedition) for RTD's.

Q1 - RTD's and Cryogenic (warm-up) Heaters					
Temperature of Building (± 5°): 70°					
Component	**Fermi**	**CERN**	**Range**	**Resistance**	**Mfr. Resistance (Expedition)**
Q1 RTD, primary	TaQ1	TT8311	**60 to 70Ω**	70.406 Ω	Ω
Q1 RTD, redundant	TbQ1	TT8321	**60 to 70Ω**	72.226 Ω	Ω
Q1 Cryogenic (warm-up) Heater (LE) - wire at top (CERN #1 I+)	W1aQ1	EH8311+	**16 to 18.5Ω**	17.69 Ω	
Q1 Cryogenic (warm-up) Heater (LE) - wire at bottom (CERN #1 I-)	W2aQ1	EH8311-			
Q1 Cryogenic (warm-up) Heater (Non-LE) - wire at top (CERN #2 I+)	W1bQ1	EH8321+	**16 to 18.5Ω**	18.08 Ω	
Q1 Cryogenic (warm-up) Heater (Non-LE) - wire at bottom (CERN #2 I-)	W2bQ1	EH8321-			

Technician(s) 4-27-06 Date

4.6 Using the Hewlett Packard HP3457A digital multimeter, measure the Protection (Strip) Heater Resistance for Q1.

Q1 Protection (Strip) Heater Resistance					
Fermi	**CERN**	**KEK**	**Description**	**Limit**	**Resistance**
H1aQ1	**YT1111+**	**HA1**	**Circuit A**	**28 to 32 Ω**	30.07 Ω
H2aQ1	**YT1111-**	**HA2**			
H1bQ1	**YT1121+**	**HB1**	**Circuit B**	**28 to 32 Ω**	30.29 Ω
H2bQ1	**YT1121-**	**HB2**			

Technician(s) 4-27-06 Date

4.7 Using the HP4284A, connect power thru the corrector Power Leads (H1B and H1A to measure Q1-H1 or V1B and V1A to measure Q1-V1). Connect the Sense Leads as shown in table below and record resistance.

Corrector Bus Leads

	V1A	V1B	H1A	H1B

(View Looking into Q1)

Readout Labels		Power Labels	Resistance	Nominal Resistance
V1A	EE8111	V1A, V1B	.01 Ω	< 5 Ω
EE8111	V1B		17.41 Ω	17 - 20 Ω
V1A	V1B		17.42 Ω	17 - 20 Ω
H1A	EE8121	H1A, H1B	.01 Ω	< 5 Ω
EE8121	H1B		21.34 Ω	20 - 23 Ω
H1A	H1B		21.35 Ω	20 - 23 Ω

Technician(s)

4.27.06
Date

4.8 Does Magnet require Hi-potential Testing?

☒ YES, HIPOT REQUIRED, Proceed to Step 4.9.

Maximum Voltage: 1500 V

☐ NO, HIPOT NOT REQUIRED, Proceed to Step 5.0

STOP

Andy Hoch
Responsible Authority/Physicist

28-APR-2006
Date

4.9 Hipot according to table below. Hipot to value recorded in Step 4.8. Maximum leakage is 3μA.

STOP

Have Crew Chief verify setup and sign below before continuing.

Crew Chief

4/27/06
Date

Table 4.9.1			
Hipot Heaters to Coil and Ground.			
High Potential	**Grounded**	**Floating**	**Leakage**
All Strip Heaters	Magnet Coils, Corrector Coils, Yoke, RTD's and Warm-up Heaters	Nothing	615 μA

Table 4.9.2			
Hipot Coil to Heaters and Ground			
High Potential	**Grounded**	**Floating**	**Leakage**
All Magnet Coils	Corrector Coils, Strip Heaters, Yoke, RTD's and Warm-up Heaters	Nothing	516 μA

Technician(s)

4-27-06
Date

STOP

Responsible Authority/Physicist

28-APR-2006
Date

5.0 Magnet Preparation Non-IP Magnet End

5.1 Separate, identify, and label the Non-IP Magnet End Corrector leads as per (ME-369894) and figure 5.1-A below.

Figure 5.1-A

Technician(s) 4-27-06 Date

5.2 Locate and identify the 8 KA Bus Leads. Label the Leads "A" and "B" as per Figure 5.2-A below.

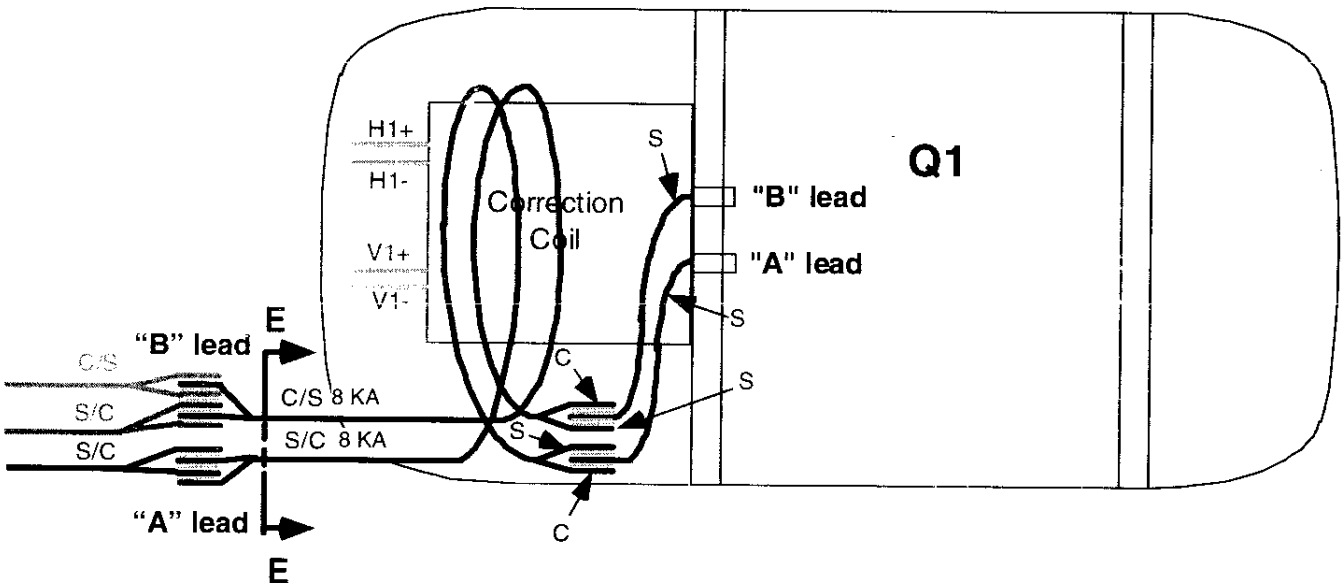

INNER TRIPLET BUS AND EXPANSION LOOP LAYOUT

Figure 5.2-A

Technician(s) 4-27-06 Date

5.3 Insulate the 8 KA Bus Leads using approved methods.

Note(s):

These leads must be insulated using approved methods (refer to ME-369894), first as an individual lead, then insulated as a pair to prevent 'shorting' to the other leads

Technician(s) 4-27-06 Date

5.4 Insulate the magnet leads using ¾" Black Shrink Tubing (MA-318797). Ensure that the entire length of magnet leads are covered before heat shrinking.

Technician(s) _____ Date 4-27-06

5.5 Move leads back and forth to ensure that the leads have sufficient travel for thermal expansion. Leads should have travel shown in figure below. From inside the bellows, measure from the outer edge of the Bellows to Tube adapter ring inward toward the magnet center.

Note(s):

Protect the Bellows during all stages of production.

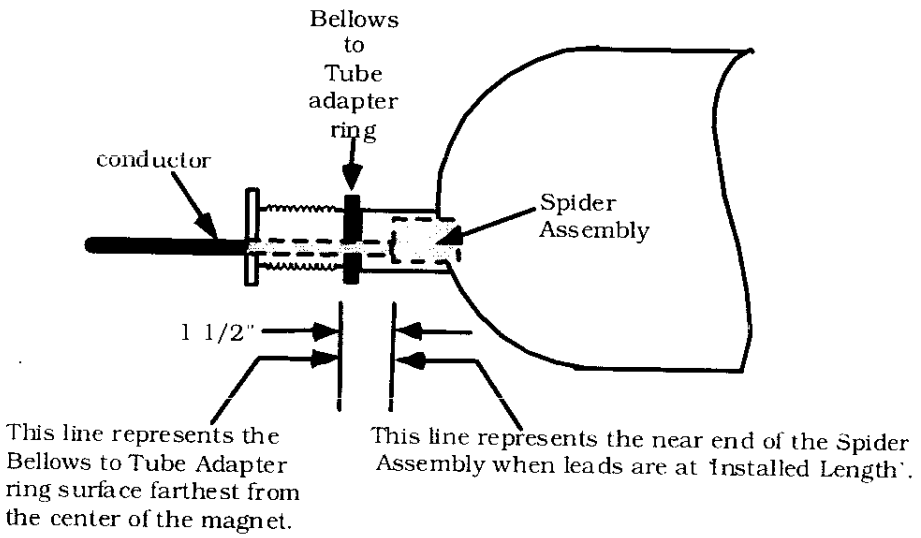

Record Travel Distance	2.25"

Technician(s) _____ Date 4-27-06

5.6 With the Spider at the installed position, measure and record the length of the conductor from the 'flat' of the magnet dome to the end of the conductor and record in the box provided below. (+/- 10mm)

Note(s):

The 440 mm dimension for the magnet leads includes an approximate 30 mm of extra buffer cable for installation tolerances.

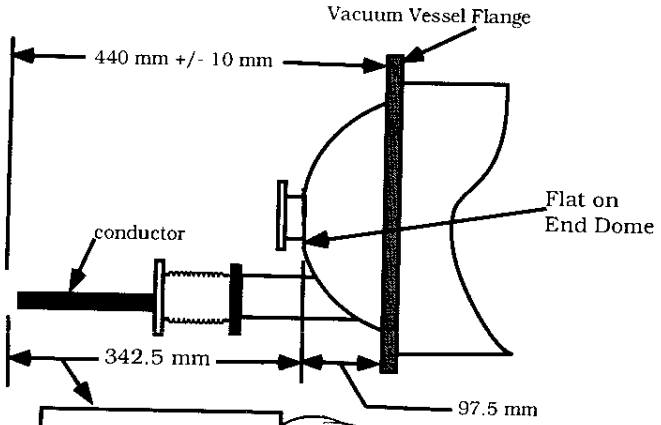

345mm RB

Technician(s) _____ Date 4-28-06

STOP

5.7 Verify Step 5.5 Conductor measurement and Step 5.6 Spider Assembly measurements are acceptable.

Responsible Authority/Physicist _____ Date 4-28-06

6.0 Magnet End Preparation

NO SLIDING FLANGE ON IP END

6.1 Install Bellows End Sliding Flange Assembly (ME-390021) using Bolts on ~~both~~ the Non-IP ~~and IP~~ Magnet End~~s~~.

Note(s):

Protect the Bellows during all stages of production.

Technician(s) _____ Date 4-27-06

6.2 Acquire Q1 Shipping Restraint Assembly (ME-390250) (1 ea).

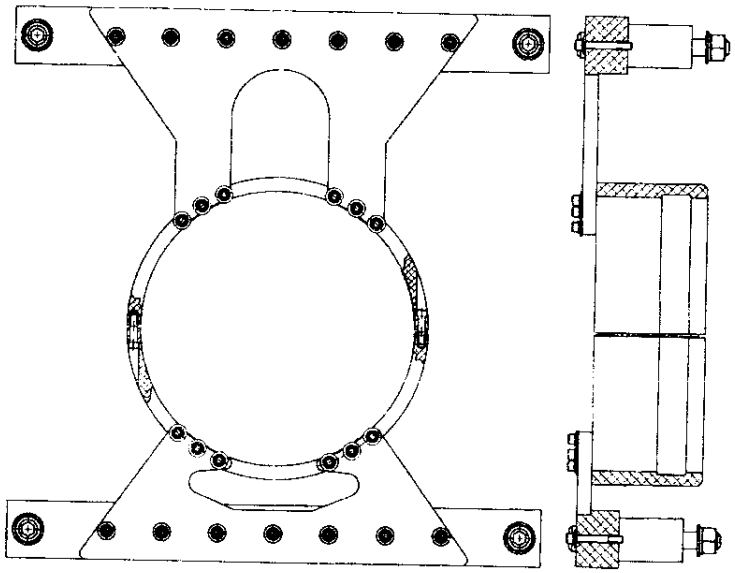

Q1/Q3 Shipping Restraint
End View
ME-390250

Q1/Q3 Shipping Restraint
Side View
ME-390250

Technician(s) _____ Date 4-27-06

6.3 Acquire Q1 Non IP-End Shipping Restraint Assembly (ME-390251) (1 ea).

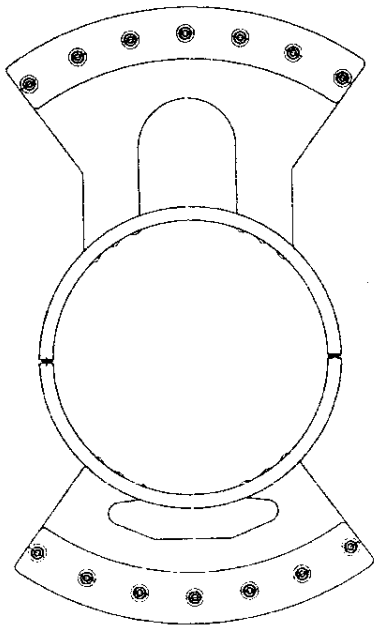

Q1 IP-End Shipping Restraint
End View
ME-390251

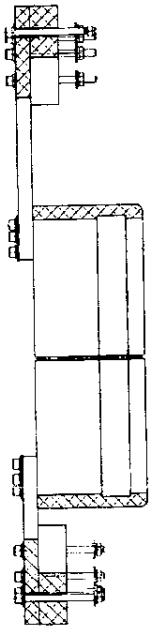

Q1 IP-End Shipping Restraint
Side View
ME-390251

Technician(s) _____ Date 4/27/06

6.4 Install the Shipping Restraint on the Non-IP Magnet end.

Note(s):

Installation Shipping Restraint bolts should be only finger tight until complete assembly is installed.

6.4.1 Install Cold Mass Collar (ME-390202) and secure using Socket Head Cap Screws (MA-393191), Plain Washers (MA-393060) and Lock Washers (MA-393061) per Q1 Shipping Restraint Assembly (ME-390250).

6.4.2 Install Upper Support Cross Bar (MD-390238) (1 ea) with Spacer Bushing (MB-390577) (2 ea) using Bolt (MA-393183 (2 ea), Lock Washer (MA-393186) (4 ea), Plain Washer (MA-393185) (4 ea), and Nut (MA-393184) (2 ea).

6.4.3 Install Lower Support Cross Bar (MD-390238) (1 ea) with Spacer Bushing (MB-390577) (2 ea) using Bolt (MA-393183 (2 ea), Lock Washer (MA-393186) (4 ea), Plain Washer (MA-393185) (4 ea), and Nut (MA-393184) (2 ea).

6.4.4 Install the Upper Bridge (ME-390240) to the Upper Support Bar using Bolt (MA-393187) (7 ea), Lock Washer (MA-393061) (7ea), and Flat Washer (MA-393060) (7ea).

6.4.5 Install the Lower Bridge (ME-390241) to the Lower Support Bar using Bolt (MA-393187) (7 ea), Lock Washer (MA-393061) (7ea), and Flat Washer (MA-393060) (7ea).

6.4.6 Secure Upper Bridge to Cold Mass Collar with Bolt (MA-393191) (6 ea), Lock Washer (MA-393061) (6 ea), and Plain Washer (MA-393060) (6 ea).

6.4.7 Secure Upper Bridge to Cold Mass Collar with Bolt (MA-393191) (6 ea), Lock Washer (MA-393061) (6 ea), and Plain Washer (MA-393060) (6 ea).

6.4.8 Tighten all the Shipping Restraint Bolts.

C. Fuiay
Technician(s)

4/27/06
Date

6.5 Install the Shipping Restraint on the IP Magnet end.

Note(s):

Installation Shipping Restraint bolts should be only finger tight until complete assembly is installed.

6.5.1 Install Cold Mass Collar (ME-390202) and secure using Socket Head Cap Screws (MA-393191), Plain Washers (MA-393060) and Lock Washers (MA-393061) per Q1 IP-END Shipping Restraint Assembly (ME-390251).

6.5.2 Install Upper Support Cross Bar (MD-390238) (1 ea) with Spacer Bushing (MB-390577) (2 ea) using Bolt (MA-393183 (2 ea), Lock Washer (MA-393186) (4 ea), Plain Washer (MA-393185) (4 ea), and Nut (MA-393184)(2 ea).

6.5.3 Install Lower Support Cross Bar (MD-390238) (1 ea) with Spacer Bushing (MB-390577) (2 ea) using Bolt (MA-393183 (2 ea), Lock Washer (MA-393186) (4 ea), Plain Washer (MA-393185) (4 ea), and Nut (MA-393184)(2 ea).

6.5.4 Install the Upper Bridge (ME-390240) to the Upper Support Bar using Bolt (MA-393187) (7 ea), Lock Washer (MA-393061) (7ea), and Flat Washer (MA-393060) (7ea).

6.5.5 Install the Lower Bridge (ME-390241) to the Lower Support Bar using Bolt (MA-393187) (7 ea), Lock Washer (MA-393061) (7ea), and Flat Washer (MA-393060) (7ea).

6.5.6 Secure Upper Bridge to Cold Mass Collar with Bolt (MA-393191) (6 ea), Lock Washer (MA-393061) (6 ea), and Plain Washer (MA-393060) (6 ea).

6.5.7 Secure Upper Bridge to Cold Mass Collar with Bolt (MA-393191) (6 ea), Lock Washer (MA-393061) (6 ea), and Plain Washer (MA-393060) (6 ea).

6.5.8 Tighten all the Shipping Restraint Bolts.

O. Finian
Technician(s)

4/27/06
Date

6.6 Install Electrical Bus Shipping Restraint Short End Cover (MD-390752) into Lower Cold Mass Pipe to protect the Buss Wire.

C. Fi[illegible] 4 27 06
Technician(s) Date

6.7 Install Protective End onto PVC Bus Protector Tube.

C. Fi[illegible] 4 27 06
Technician(s) Date

6.8 Secure bellows with Bellow Restraint/Protective Cover (MA-390153) using Screws (MA-390180).

Note(s):

Protect the Bellows during all stages of production.

C. F[illegible] 4 27 06
Technician(s) Date

6.9 Install the Vinyl Flange Covers (MA-390491), (MA-390492), (MA-390493), (MA-390494), & the Alignment Fiducial Covers (MA-390495).

C. F[illegible] 4 27 06
Technician(s) Date

6.10 Are Accelerometers (Shock Recorders) available for installation?

☒ **Yes - Install Accelerometers as per Responsible Authority and Figure 6.10-A. below.**

☐ **No - Accelerometers are <u>NOT</u> available for installation.**

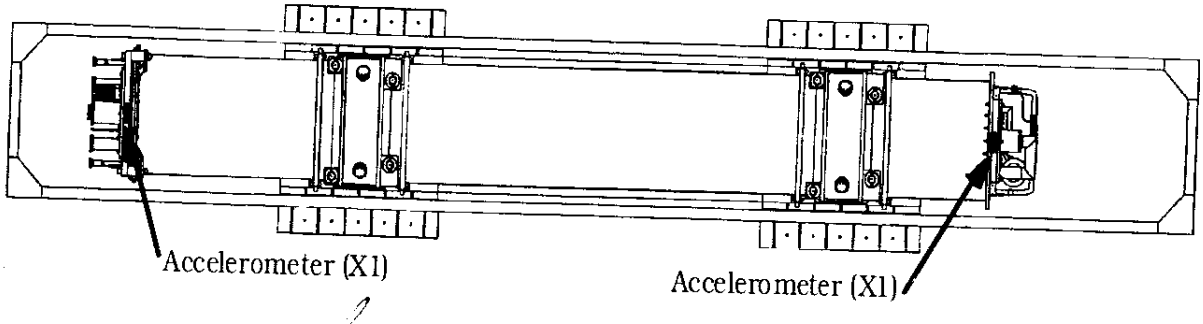

Figure 6.10-A

Technician(s) _____ Date 5-8-06

6.11 Install Magnet Identification Labels as per Q1 Identification Labeling Layout (ME-390761).

Example:

If Serial No. at bottom of Traveler is: LQXA06

Stencil Serial No. should be:HCLQXA_001-FL000006

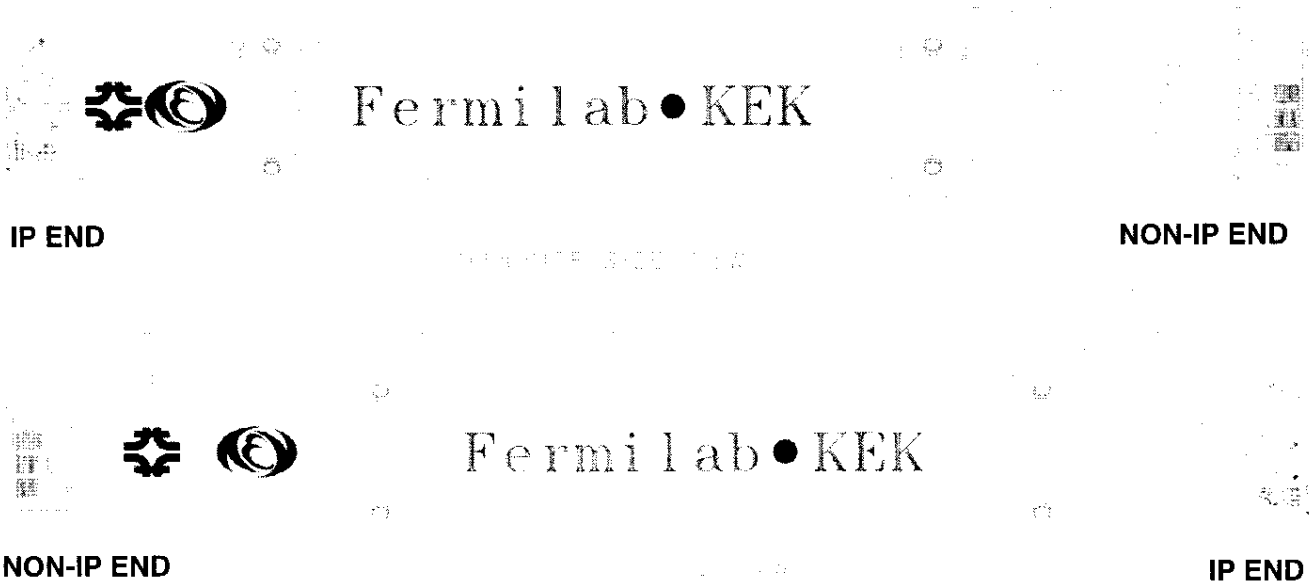

Q1 IDENTIFICATION LABELING LAYOUT (ME-390761)

Technician(s) _____ Date 5/3/06

STOP

6.12 Verify Magnet has been properly labeled/stenciled, and serial number matches the bottom of this traveler and as per (ME-390761).

Example:

If Serial No. at bottom of Traveler is: LQXA06

Stencil Serial No. should be:HCLQXA_001-FL000006

Lead Person _____ Date 5/3/06

7.0 Final Inspection/Installation

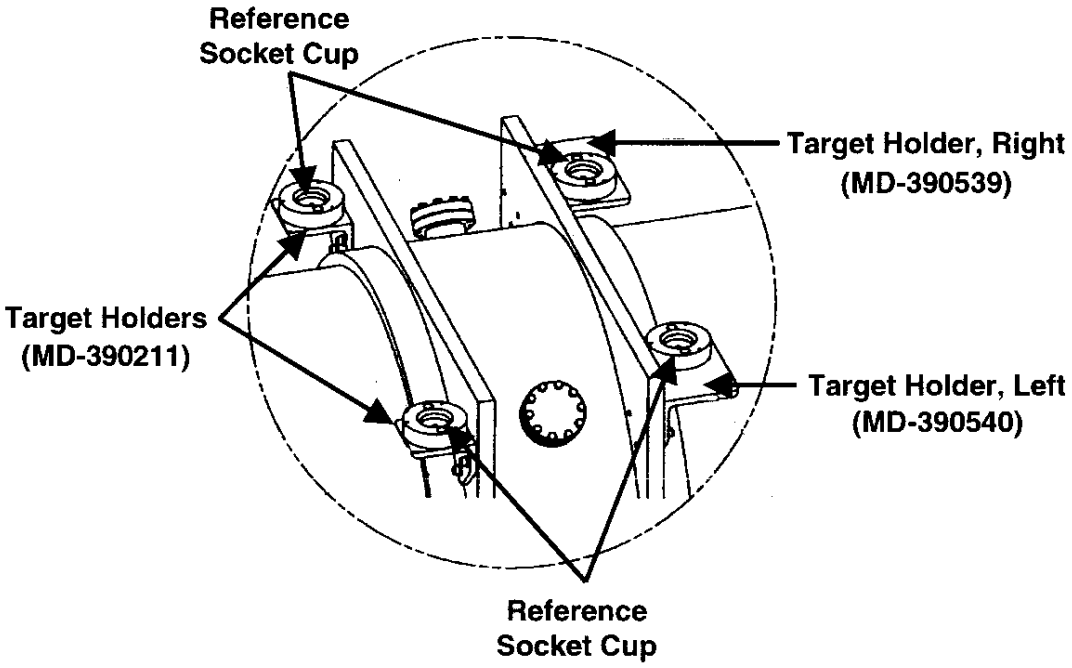

STOP

7.1 Verify Target Holder (MD-390211) (4 ea), Target Holder, Right (MD-390539) (2 ea), and Target Holder, Left (MD-390540) (2 ea) with Reference Socket Cup (MA-390426) (8 ea) and Protective Covers (MA-390495) are installed.

Lead Person _____ Date 5/3/06

STOP

7.2 Verify that the Target Holder had been pinned using Spring Pins (MA-393048) as per Q1 Cryostat General Assembly (ME-390132).

Lead Person _____ Date 5/3/06

8.0 Shipping the Magnet

☒ **Check box if shipping frame is installed in Shipping Container. Proceed to STEP 8.2.**

☐ **Check box if Shipping Frame is NOT installed already installed in a Shipping Container. Proceed to STEP 8.1**

Lead Person _____ Date 5-4-06

8.1 Acquire the Shipping Frame Assembly (ME-390729). (May be N/A if 2nd box above is checked.)

Technician(s) _____ Date _____

8.2 Verify that Frame Separator Bars are installed on the Shipping Frame Assembly. Refer to Q1/Q3 and Q2 Fixture Return Shipping Assembly (ME-390798).

Technician(s) _____ Date 5-4-06

8.3 Verify the following parts. Acquire as needed.

Separator Bars	ME-390797	3 ea
Screw ½" – 13 X 3.5" l	MA-393384	6 ea
Washer, Flat ½"	MA-393325	6 ea
Washer, Bevel ½"	MA-393385	6 ea
Hex Nut ½" - 13	MA-393298	6 ea

Note:

Ensure Q2 to Q1/Q3 Hardware is also acquired/installed for usage by CERN:

Screw ¾" -10 x 3.5"	MA-393384	4 ea	Installed on two end Separator Bars
Washer Flat ¾"	MA-393323	4 ea	Installed on two end Separator Bars
Hex Nut ¾"- 10	MA-393387	4 ea	Installed on two end Separator Bars
Screw 1"-8 x 4" long	MA393388	2 ea	Installed on center Separator Bar
Washer Flat 1"	MA 393389	2 ea	Installed on center Separator Bar
Hex Nut 1"-8	MA-393390	2 ea	Installed on center Separator Bar

Technician(s) _____ Date 5-4-06

8.4 Verify the following shipping hardware. Acquire as needed.

Eyebolt	McMaster-Carr 3016T87	4 ea
Eyebolt	McMaster-Carr 3016T85	4 ea
Hex Nut	MA-393327	16 ea
Flat Washer	MA-393328	8 ea
Lock Washer	MA-393329	8 ea
Chain w/2 Hooks	MA-390702	4 ea
Mounting Bolts	MA-393321	6 ea
Flat Washer	MA-393323	6 ea
Lock Washer	MA-393322	6 ea

Technician(s) _____ Date 5-4-06

8.5 Verify the Hoist Rings (4 ea) have been removed from the Outer Frame as per (ME-390727). Remove as needed.

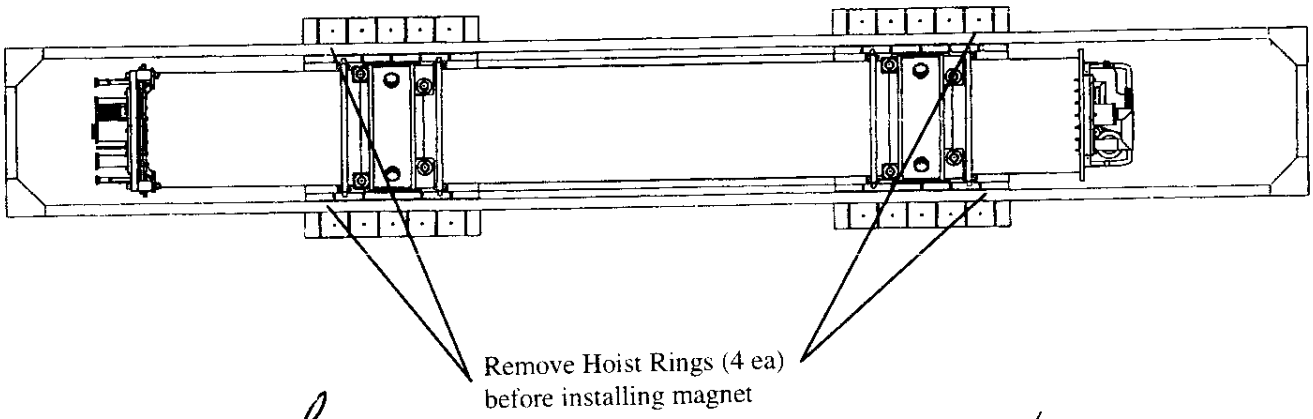

Technician(s) _____ Date 5-4-06

8.6 Transport the Shipping Frame Assembly (ME-390729) and install into the Shipping Container using approved methods.

Technician(s) N/A _____ Date _____

9.0 Magnet to Shipping Frame/Platform Installation

9.1 Transport the magnet to the Magnet Shipping Fixture and install using Bolt (MA-393321) (6 ea), Flat Washer (MA-393323)(6 ea), and Lock Washer (MA-393322)(6 ea).

Note(s):

Apply a small amount of Anti-Seize to all the bolt threads prior to installing the bolts.

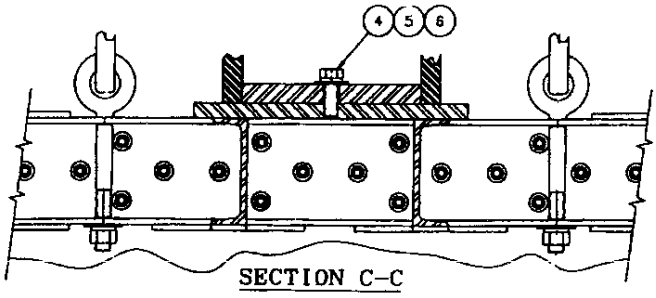

Q1 Magnet Shipping Assembly

(ME-390727)

Technician(s) _____ Date 5/6/06

9.2 Install Eyebolts, McMaster-Carr #3016T85 (4 ea), Eyebolts, McMaster Carr #3016T87 (4 ea), Flat Washer (MA-393328)(8 ea), and Lock Washer (MA-393329)(8 ea) into Shipping Fixture.

Note: Install all Eyebolts #3016T85 on one side of the shipping fixture. Eyebolts #3016T87 go on the opposite side.

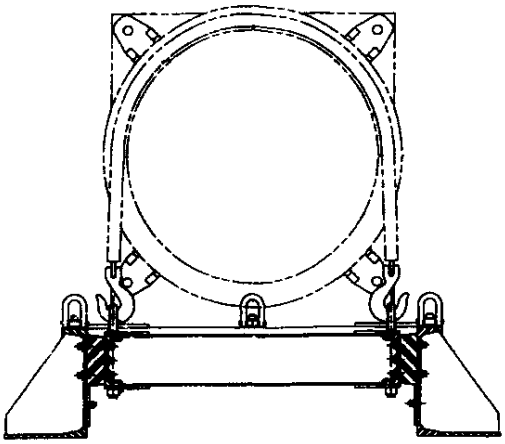

9.3 Install Lift All Pukka Wear Pad Protectors (MA-393345) onto magnet prior to installing Chain Sling.

Technician(s) _____ Date 5/6/06

9.4 Install chain sling w/2 hooks (MA-390702) (4 ea) into eyebolts.

Technician(s) _____ Date 5/6/06

9.5 Tighten eyebolts until chains are snug.

Technician(s) _____ Date 5/6/06

9.6 Install an additional nut (double-nutting) on each eyebolt and tighten.

Technician(s) _____ Date 5/6/06

9.7 Wrapping of the magnet.

☐ Performed by Shipping Company, proceed to Step 9.9

☒ Performed by Fermilab, proceed to Step 9.8

Lead Person _____ Date 5-6-06

9.8 Wrap the magnet in protective material (VCI Plastic) and seal the seam using approved methods to form a protective bag. **(This step may be N/A. See check box in step 9.7)**

Technician(s) _____ Date 5/6/06

9.9 Install cross braces on the top of the shipping container.

Technician(s) _____ Date 5/6/06

9.10 Install protective cover on the top of the shipping container and secure.

Technician(s) _____ Date 5/6/06

STOP

9.11 Verify the magnet, shipping frame are properly secured, and protected.

Responsible Authority/designee _____ Date 5-5-06

STOP

9.12 Close and secure doors on the shipping container.

Crew Chief _____ Date 5-5-06

10.0 Documentation Update

10.1 Perform the following:

- [x] **Update DSR Keywords.**
- [x] **Location.**
- [x] **Location Verified Date.**
- [x] **Status.**
- [x] **Make entry regarding work performed.**

TD/E&F Production Supervisor/designee

5/9/04
Date

11.0 Production Complete

11.1 Process Engineering will verify that the Traveler is accurate and complete. This shall include a review of all steps to ensure that all operations have been completed and signed off. Ensure that all Discrepancy Reports, Nonconformance Reports, Repair/Rework Forms, Deviation Index and dispositions have been reviewed by the Responsible Authority for conformance before being approved.

Comments:

Bob [signature]
Process Engineering/Designee

6/27/06
Date

Process Engineering

TD - Engineering Fabrication Component Kit List

Material Control

ORIGINAL

Component Serial No. LQXA09

Kit submitted by: Bob Jensen 3173

Fermi ID No. 315

Date submitted: 14-Apr-06

Need date: 19-Apr-06

Deliver to: ICB

Use with Traveler No. 333728

Job No. 389

M&S task number: 300 1.1.1.3.5

Drawing Title: Q1 MAGNET SHIPPING ASSEMBLY

Drawing No. ME-390727 Rev. NONE

Parts available

Verified by: M. Schmidt MS

Fermi ID No. 04223N

Date submitted to stockroom: 4/14/2006

Parts issued

Issued by: [illegible]

Fermi ID No. 12792

Date issued: 4-17-06

Parts received by E&F: Bob [illegible]

Fermi ID No. 0315

Date received by E&F: 4/17/06

	Description	Dwg Size	Number	Rev	Unit	Quantity Required	Location	Quantity Issued	E&F Verified	Routing Form Number	Spares Number / Comment
1	KAPTON TAPE	MA	106723	A	EA	A/R					
2	¾" BLACK SHRINK TUBING	MA	318797	A	EA	A/R					
3	Q1 CRYOSTAT ASSEMBLY	ME	390127	G	EA	ICB HAS					
4	BELLOWS PROTECTORS	MA	390153	*	EA	6	R7,2,2	6	✓	79773	22 pcs.
5	Q1/Q3 SHIPPING RESTRAINT ASSEMBLY	ME	390250	A	EA	1	ICB has				
6	Q1 IP-END SHIPPING RESTRAINT ASSEMBLY	ME	390251	*	EA	1	ICB has				
7	CHAIN SLING W/ 2 HOOKS	MA	390702	*	EA	4	ICB has				
8	Q1/Q3 SHIPPING FIXTURE	ME	390729	*	EA	ICB HAS					
9	ELECTRICAL BUS SHORT END COVER	MD	390752	*	EA	1	R7,3,4	1	✓	81802	4 pcs.
10	SOCKET HEAD CAP SCREW M4 x 10mm LG S.S.	MA	393180	*	EA	18	23B2	18	✓	79631	57 pcs.
11	3/4-10 HEX HD. BOLT x 2.50 LG. - GR. 8 STL.	MA	393321	*	EA	6	ICB has				

JAMIS190

TD - Engineering Fabrication Component Kit List

	Description	Dwg Size	Number	Rev	Unit	Quantity Required	Location	Quantity Issued	E&F Verified	Routing Form Number	Spares Number / Comment
12	3/4 LOCK WASHER - STL.	MA	393322	*	EA	6	ICB has				
13	3/4 FLAT WASHER - STL.	MA	393323	*	EA	6	ICB has				
14	1"-8 HEX NUT - STL.	MA	393327	*	EA	16	ICB has				
15	1" FLAT WASHER - STL.	MA	393328	*	EA	8	ICB has				
16	1" LOCK WASHER - STL.	MA	393329	*	EA	8	ICB has				
17	LIFT ALL PUKKA WEAR PAD PROTECTORS	MA	393345	*	EA	4	ICB has				
18	EYEBOLT - 1"-8 x 12" LG.		390731-11	*	EA	4	ICB has				
19	EYEBOLT - 1"-8 x 9" LG.		390731-7	*	EA	4	ICB has				
20	ANTI-SEIZE			*	EA	ICB HAS					
21	ACCELEROMETER			*	EA	ICB HAS					