Document ID: 2293

LHC Q2 LQXB Cryostat Shipping Traveler

333732 / Rev. NONE

Job No: 248

E + F Project/Task No.: 300/1.1.1.6.2

M + S Project/Task No.: 300/1.1.1.6.2

Place This Side Down For Scanning!!!

SCANNED
DEC - 2 2004
TD-FFD PROCESS ENGINEERING

Rescanned to correct error in serial # Bob Jew

LQXB01-0

Document ID:

2293

Job No.:

248

Project/Task No.

300/1.1.1.6.2

Series:

LQXB

Serial No:

LQXB01

Rework ID:

0

Specification No.:

333732

Revision:

NONE

LQXB01-0

LQXB01

Q2-LQXB Traveler TR-33732 was approved for usage on 6/28/04 and issued on 7/8/04.

LQXB01 Magnet was shipped to CERN - 5-11-04.

Magnet was shipped to CERN prior to approval of the traveler.

All mechanical steps were performed prior to shipping of the magnet by Fermi LHC Production Technicians. Magnet crating was done by DC Export.

All electricals were performed by Mike Lamm and colleagues. Electrical data in this traveler has been transcribed from other documents by Mike Lamm.

Bob Jensen
11/23/04

Fermi National Accelerator Laboratory
Batavia, IL 60510

LARGE HADRON COLLIDER
Q2 - LQXB
SHIPPING TRAVELER

Reference Drawing(s):
Q2 Shipping Fixture Final Assembly
ME-390686
Q2 Magnet Shipping Assembly
ME-390710

Project#/Task #: 300/1.1.1.6.2	**Job #: 248**
Released By: Bob Jensen	**Magnet/Device Series: LQXB**
Date Issued: 7/8/2004 3:39:13 PM	**Scanned Pages: 33**
Prepared by: B. Jensen	

Title	Signature	Date
TD / E&F Process Engineering	*Bob Jensen* Bob Jensen / Designee	*6/28/04*
TD / LHC Production Supervisor	*Jim Rife* Jim Rife / Designee	*6/28/04*
TD / LHC Production Engineer	*Tom Page* Tom Page / Designee	*6/28/04*
TD / LHC Project Engineer Cryostat	*Tom Nicol* Tom Nicol / Designee	*6/28/04*
TD / LHC Project Physicist	*Michael Lamm* Michael Lamm / Designee	*6/28/04*
TD / LHC Program Manager	*Jim Kerby* Jim Kerby / Designee	*6/28/04*

Revision Page

Revision	Step No.	Revision Description	TRR No.	Date
None	N/A	Initial Release	N/A	6/28/04

Ensure appropriate memos and specific instructions are placed with the traveler before issuing the sub traveler binder to production.

1.0 General Notes

1.1 All steps that require a sign-off shall include the Technician/Technician(s)s first initial and full last name.

1.2 No erasures or white out will be permitted to any documentation. All incorrectly entered data shall be corrected by placing a single line through the error, initial and date the error before adding the correct data.

1.3 All Discrepancy Reports and Traveler Revision Requests issued shall be recorded in the left margin next to the applicable step.

1.4 Personnel shall perform all tasks in accordance with current applicable ES&H guidelines and those specified within the step.

1.5 Cover the product/assembly with Green Herculite (Fermi stock 1740-0100) when not being serviced or assembled.

2.0 Parts Kit List

2.1 Attach the completed Parts Kit for this production operation to this traveler. Ensure that the serial number on the Parts Kit matches the serial number of this traveler. Verify that the Parts Kit received is complete.

no part kit released. 11/23/04
Process Engineering/Designee Date

Part kit was in draft and not used with magnet
Bob Johnson
11/23/04

3.0 Post MTF Magnet Preparation Non-IP Magnet End

3.1 Compress the bellows on the Non-IP End using Bellows Compression Tool.

3.2 Locate and identify the 13 KA Bus Leads.

_____ _____
Technician(s) Date

XX 3.3 Verify the 13 KA Bus Leads have been properly identified.

_____ _____
Lead Person Date

3.4 Verify the 13 KA Bus Leads have been proper identified.

_____ _____
Responsible Authority/Physicist Date

3.5 Cut the 13 KA Bus Leads within 1" of the conductor connector.

3.6 Insulate the 13 KA Bus Leads using approved methods.

_____ _____
Technician(s) Date

3.7 Remove the Bellows Compression Tooling.

_____ _____
Technician(s) Date

3.8 Separate, identify, and label the Non-IP Magnet End Corrector leads as per ME-369895 and figure below.

Note: 120 Spliced area dimension for magnet leads does not include an approximate 40mm of extra buffer cable. Do not cut unless approved by Production Supervisor.

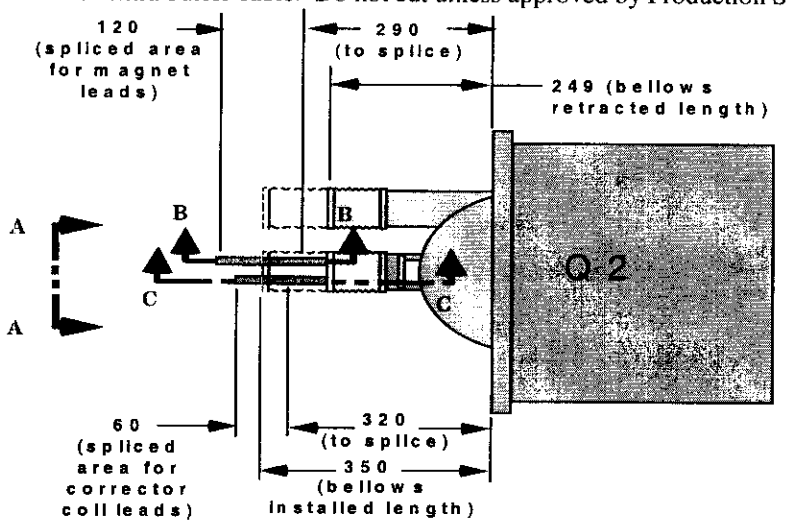

Top (plan) view of non-IP end of Q2

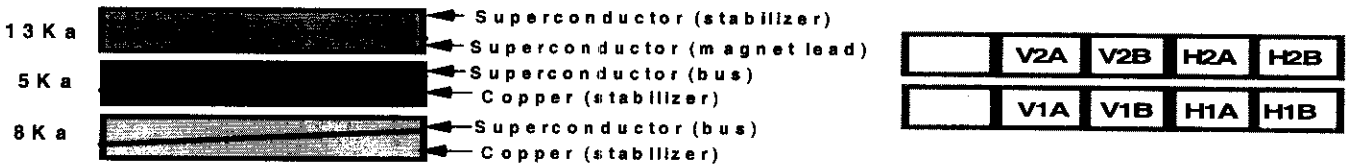

View A-A (Q2 Lead Configuration)

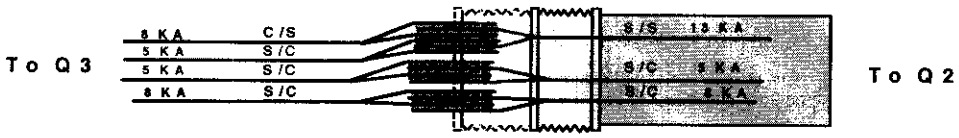

Section B-B (Magnet Lead Configuration)

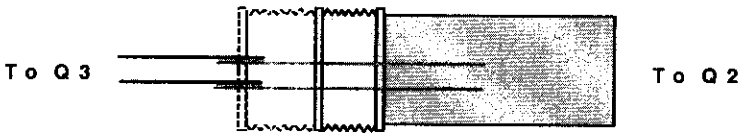

Section C-C (Corrector Bus Lead Configuration)

Note: These leads must be insulated using approved methods (refer to Lead Installation ES-XXXXXX), first as an individual lead, then insulated as a pair to prevent 'shorting' to the other leads.

Technician(s) _____ Date _____

4.0 Post MTF Magnet Preparation IP Magnet End

4.1 Separate, identify, and label the Non-IP Magnet End Corrector leads as per Me-369895and figure below.

Note: 120 Spliced area dimension for magnet leads does not include an approximate 40mm of extra buffer cable. Do not cut unless approved by Production Supervisor.

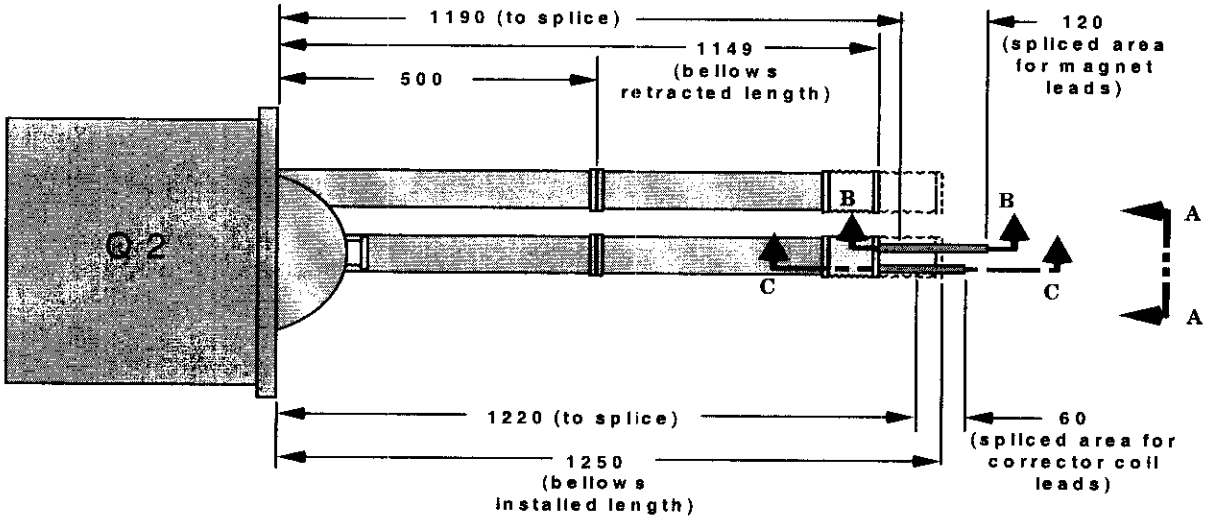

Top (plan) view of IP end of Q2

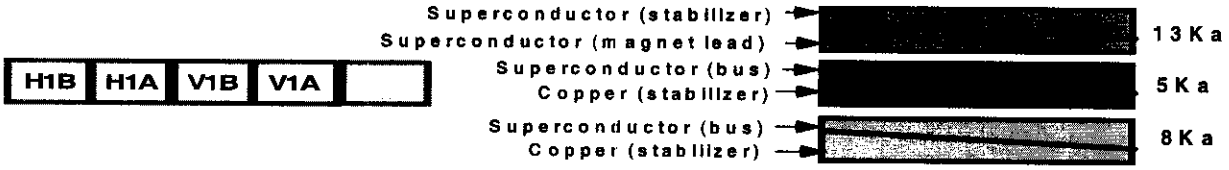

View A-A (Q2 Lead Configuration)

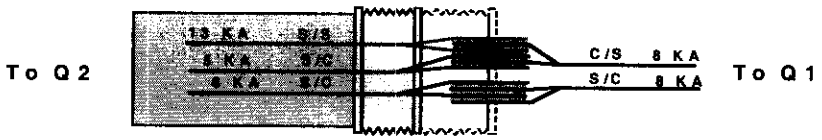

Section B-B (Magnet Lead Configuration)

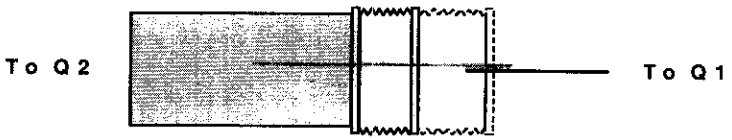

Section C-C (Corrector Bus Lead Configuration)

Note: This lead must be insulated using approved methods to prevent 'shorting' to the other leads.

Technician(s) _____ Date _____

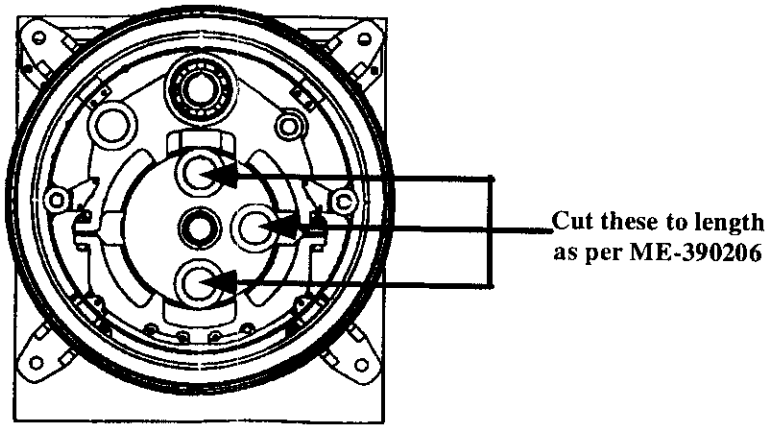

4.2 Measure and mark the XX, XX, and XX tubes for cutting as per Q2 Cyrostat Dwg (ME-390206).

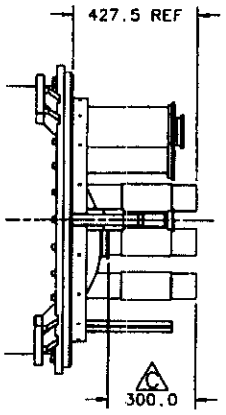

IP END
Side View

Technician(s) _____ Date _____

STOP

4.5 Verify that the XX, XX and XX tubes have been measured and marked correctly and are acceptable for cutting.

_____ _____
Responsible Authority/Physicist Date

4.6 Cut the XX, XX and XX tubes using approved methods.

_____ _____
Technician(s) Date

X 4.7 Verify the XX, XX, and XX tubes have been properly cut.

_____ _____
Lead Person Date

5.0 Final Resistance Electrical Inspection

5.1 Perform an electrical inspection on each of the Individual Quadrants and the Cold Masses. Refer to the Valhalla and Leader Free Standing Coil Measurement Procedure (ES292306).

To measure the resistance of a bussed Q2:

1. Use Valhalla Scientific 4300B digital micro-ohmmeter.
2. Set Test Current to 1 amp.
3. Set Scale to 2V full scale.
4. Turn temperature compensation on.
5. Turn test current off.
6. Put jumper between Q2a Quadrant #3 inner power lead and 5 KA bus as shown in figure.
7. Connect I_{HI} to the 5KA bus (Q2a Quadrant #3 inner power lead) as shown in figure.
8. Connect I_{LO} to the Q2b Quadrant #3 inner power lead as shown in figure.
9. Turn test current on.
10. Connect V_{HI} and V_{LO} buttons to voltage taps as shown below.
11. Read resistance and record in traveler.

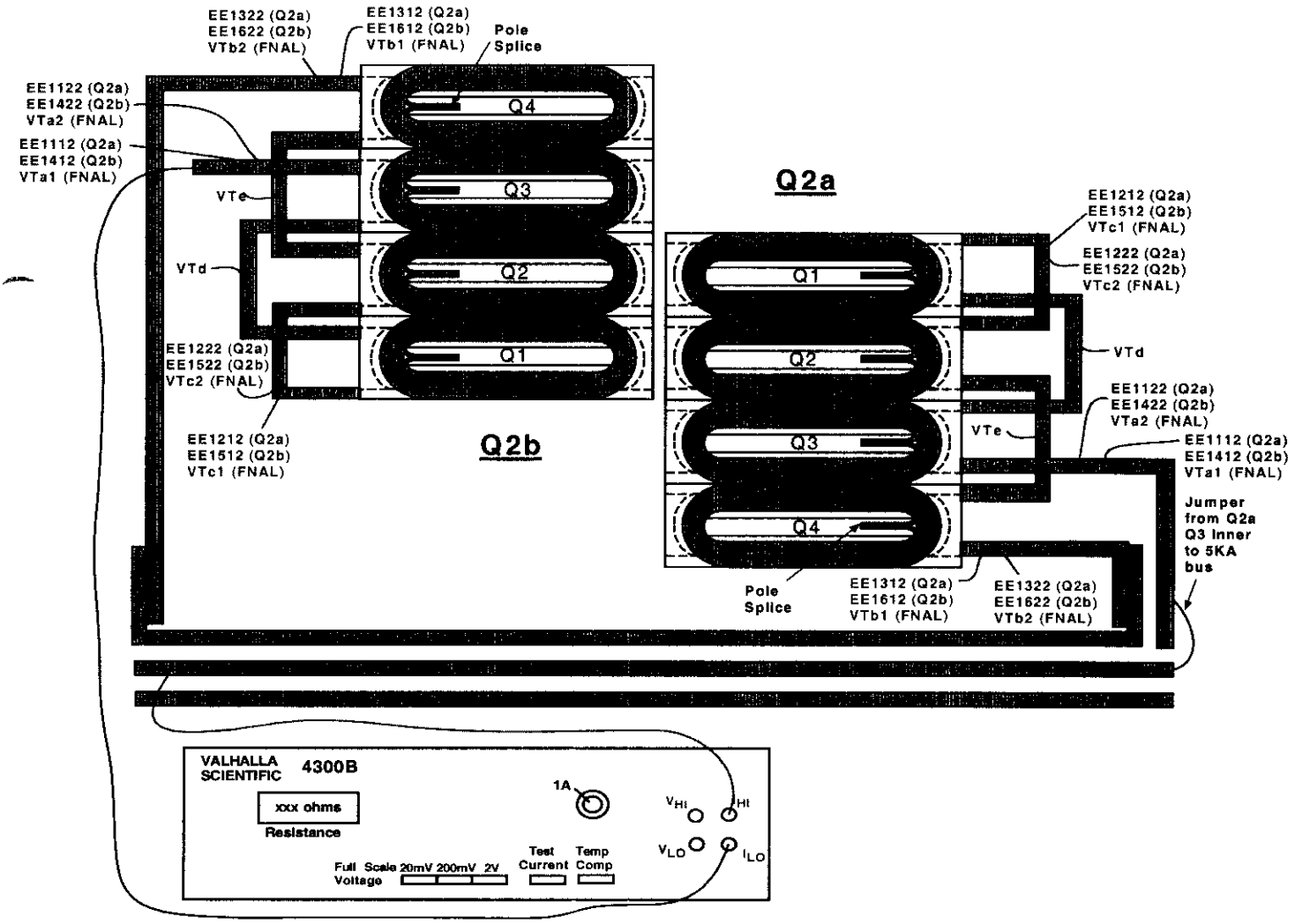

Note: Sign of resistance reading should always be positive. If negative readings notify production supervisor.

TABLE 5.0.1				
(Q2a) Resistance				Nominal ~ 560 to 585 mΩ
Voltage Tap Serial Numbers				Quadrant Total Resistance
Connect	Fermi	CERN	Quadrant	Fermi
V_{HI}	VTdQ2a	EMPTY	Quadrant 1	573 mΩ
V_{LO}	VTc1Q2a	EE1212		
V_{HI}	VTc1Q2a	EE1212	Quadrant 2	573 mΩ
V_{LO}	VTeQ2a	EMPTY		
V_{HI}	VTa1Q2a	EE1112	Quadrant 3	573 mΩ
V_{LO}	VTdQ2a	EMPTY		
V_{HI}	VTeQ2a	EMPTY	Quadrant 4	574 mΩ
V_{LO}	VTb1Q2a	EE1312		

Note: Sign of resistance reading should always be positive. If negative readings notify production supervisor.

TABLE 5.0.2				
				Fermi
V_{HI}	VTa1Q2a	EE1112	Quadrant #3 & #1	1146 mΩ
V_{LO}	VTc1Q2a	EE1212		Nominal ~ 1120 mΩ
V_{HI}	VTc1Q2a	EE1212	Quadrant #2 & #4	1147 mΩ
V_{LO}	VTb1Q2a	EE1312		Nominal ~ 1120 mΩ
V_{HI}	VTa1Q2a	EE1112	Total Cold Mass	2293 mΩ
V_{LO}	VTb1Q2a	EE1312		Nomimal ~ 2.305 Ω

MJ2 for Fred Lewis
Technician(s)

3/19/04
Date

Check resistance of Redundant Voltage Taps.

TABLE 5.0.3			
Q2a Redundant Voltage Taps Resistance			
			Fermi
Connect	Fermi	CERN	Nominal ~1120 mΩ
V_{HI}	VTa2Q2a	EE1122	1147 mΩ
V_{LO}	VTc2Q2a	EE1222	
V_{HI}	VTc2Q2a	EE1222	1146 mΩ
V_{LO}	VTb2Q2a	EE1322	

Technician(s) _____ Date _____

TABLE 5.0.4				
(Q2b) Resistance				Nominal ~ 560 to 585 mΩ
Voltage Tap Serial Numbers				Quadrant Total Resistance
Connect	Fermi	CERN	Quadrant	Fermi
V_{HI}	VTc1Q2b	EE1512	Quadrant 1	574 mΩ
V_{LO}	VTdQ2b	EMPTY		
V_{HI}	VTeQ2b	EMPTY	Quadrant 2	574 mΩ
V_{LO}	VTc1Q2b	EE1512		
V_{HI}	VTdQ2b	EMPTY	Quadrant 3	574 mΩ
V_{LO}	VTa1Q2b	EE1412		
V_{HI}	VTb1Q2b	EE1612	Quadrant 4	574 mΩ
V_{LO}	VTeQ2b	EMPTY		

TABLE 5.0.5				
				Fermi
V_{HI}	VTc1Q2b	EE1512	Quadrant #1 & #3	1148
V_{LO}	VTa1Q2b	EE1412		Nominal ~ 1120 m Ω
V_{HI}	VTb1Q2b	EE1612	Quadrant #4 & #2	1148
V_{LO}	VTc1Q2b	EE1512		Nominal ~ 1120 m Ω
V_{HI}	VTb1Q2b	EE1612	Total Cold Mass	2297
V_{LO}	VTa1Q2b	EE1412		Nominal ~ 2.305 Ω

Technician(s) _____ Date _____

Check the resistance of the Redundant Voltage Taps.

TABLE 5.0.6			
Q2b Redundant Voltage Taps			
			Resistance
Connect	**Fermi**	**CERN**	**Fermi**
V_{HI}	VTc2Q2b	EE1522	1148 Ω
V_{LO}	VTa2Q2b	EE1422	
V_{HI}	VTb2Q2b	EE1622	1148 Ω
V_{LO}	VTc2Q2b	EE1522	

MIL for Fred Lewis — Technician(s)

3/19/04 — Date

6.0 Final Inductance and Q Electrical Inspection

To measure Ls and Q of a Bussed Q2:

1. Use Hewlett Packard HP4284A digital LCR meter.
2. Turn line switch to on. The words "Measurement Display" should now be highlighted in the upper left corner of the display screen.
3. Use cursor buttons (shown in figure with arrows) to toggle down until "function" is highlighted near the upper left corner of the display screen.
4. Push the lowest of the five buttons to the right of display 3 times. (this button is shaded gray in the figure) The line in the display screen next to the second button down should now read "Ls-Q" and "function" near the upper left corner of the display should have the option "Ls-Q" chosen.
5. Scroll to "integer" using the cursor buttons. "Integer" will have the option "medium" chosen.
6. Press the 3rd button of five. The word "medium" should change to "long".
7. Connect H_{cur} to the 5KA bus (Q2a Quadrant #3 inner power lead as shown in figure).
8. Connect L_{cur} to Q2b Quadrant #3 inner power lead as shown in figure.
9. Connect H_{pot} and L_{pot} buttons to voltage taps as shown below.
10. Read Ls and Q from display and record in traveler.

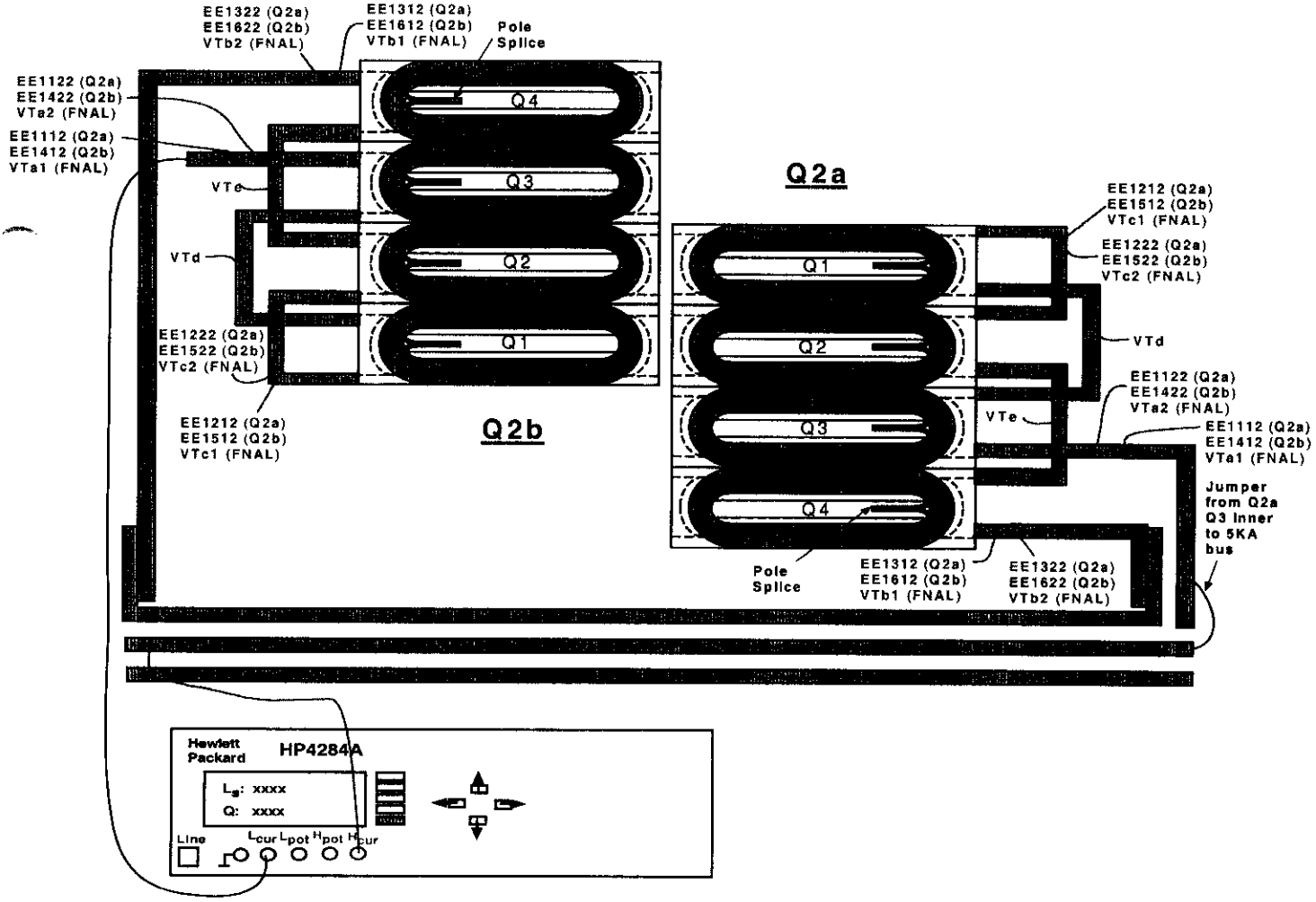

Note: All Inductance readings are taken at 1KHz.

TABLE 6.0.1				
(Q2a) Inductance				Nominal ~ 3.34 to 3.48 mH
Voltage Tap Serial Numbers				Quadrant Total Inductance
Connect	Fermi	CERN	Quadrant	Fermi
VPOT	VTdQ2a	EMPTY	Quadrant 1	3.4352 mH
VPOT	VTc1Q2a	EE1212		
VPOT	VTc1Q2a	EE1212	Quadrant 2	3.4400 mH
VPOT	VTeQ2a	EMPTY		
VPOT	VTa1Q2a	EE1112	Quadrant 3	3.4127 mH
VPOT	VTdQ2a	EMPTY		
VPOT	VTeQ2a	EMPTY	Quadrant 4	3.4485 mH
VPOT	VTb1Q2a	EE1312		

TABLE 6.0.2				
				Nominal ~ 13.28 to 13.78 mH
				Fermi
HPOT	VTa1Q2a	EE1112	Total Cold Mass	13.739 mH
LPOT	VTb1Q2a	EE1312		

TABLE 6.0.3				
(Q2a) Q-Factor				Nominal ~ 3.7 – 4.0
Voltage Tap Serial Numbers				Quadrant Total Q
Connect	Fermi	CERN	Quadrant	Fermi
HPOT	VTdQ2a	EMPTY	Quadrant 1	3.8
LPOT	VTc1Q2a	EE1212		
HPOT	VTc1Q2a	EE1212	Quadrant 2	3.8
LPOT	VTeQ2a	EMPTY		
HPOT	VTa1Q2a	EE1112	Quadrant 3	3.8
LPOT	VTdQ2a	EMPTY		
HPOT	VTeQ2a	EMPTY	Quadrant 4	3.8
LPOT	VTb1A2a	EE1312		

M/Jam
Technician(s)

Test performed 3/11/04
Date

TABLE 6.0.4				
				Nominal ~ 3.7 – 4.0
				Fermi
H_{POT}	VTa1Q2a	EE1112	Total Cold Mass	3.8
L_{POT}	VTb1Q2a	EE1312		

TABLE 6.0.5				3.34 - 3.48
(Q2b) Inductance				**Nominal ~ ~~2.880~~ to ~~2.935~~ mH**
Voltage Tap Serial Numbers				**Quadrant Total Inductance**
Connect	**Fermi**	**CERN**	**Quadrant**	**Fermi**
H_{POT}	**VTc1Q2b**	**EE1512**	**Quadrant 1**	3.42 **mH**
L_{POT}	**VTdQ2b**	**EMPTY**		
H_{POT}	**VTeQ2b**	**EMPTY**	**Quadrant 2**	3.4100 **mH**
L_{POT}	**VTc1Q2b**	**EE1512**		
H_{POT}	**VTdQ2b**	**EMPTY**	**Quadrant 3**	3.36 **mH**
L_{POT}	**VTa1Q2b**	**EE1412**		
H_{POT}	**VTb1Q2b**	**EE1612**	**Quadrant 4**	3.4185 **mH**
L_{POT}	**VTeQ2b**	**EMPTY**		

TABLE 6.0.6				13.28-13.78
				Nominal ~ ~~13.3376~~ mH
				Fermi
H_{Pot}		EE1612	Total Cold Mass	13.62 mH
L_{Pot}	VTa1Q2b	EE1412		mH

Technician(s) _____ Date _____

TABLE 6.0.7				
(Q2b) Q-Factor				Nominal ~ 3.7 – 4.1
Voltage Tap Serial Numbers				Quadrant Total Q
Connect	Fermi	CERN	Quadrant	Fermi
H_{POT}	VTc1Q2b	EE1512	Quadrant 1	3.9
L_{POT}	VTdq2b	EMPTY		
H_{POT}	VTeQ2b	EMPTY	Quadrant 2	3.9
L_{POT}	VTc1Q2b	EE1512		
H_{POT}	VTdQ2b	EMPTY	Quadrant 3	3.8
L_{POT}	VTa1Q2b	EE1412		
H_{POT}	VTb1Q2b	EE1612	Quadrant 4	3.8
L_{POT}	VTeQ2b	EMPTY		

TABLE 6.0.8				
				Nominal ~ 2.305
				Fermi
H_{POT}	VTb1Q2b	EE1612	Total Cold Mass	3.9
L_{POT}	VTa1Q2b	EE1412		

Technician(s) _____ Date _____

7.0 Final Thermometer and Heater Electrical Inspection

To measure the resistance of a Thermometer (RTD):
Use Hewlett Packard HP3457A digital multimeter.

1. Record temperature of building within +/- 5 degrees.
2. Press line button to turn line on.
3. Connect wires as shown in Figure below.
   U+ (Black) to Sense HI
   I+ (Yellow) to Input HI
   U- (Red) to Sense LO
   I- (Green) to Input LO
4. Push blue button (function key) once.
5. Push OHMF button.
6. Verify arrow in readout is above the 4W□ (meaning a 4 wire resistance measurement).
7. Read resistance in ohms and record in traveler.

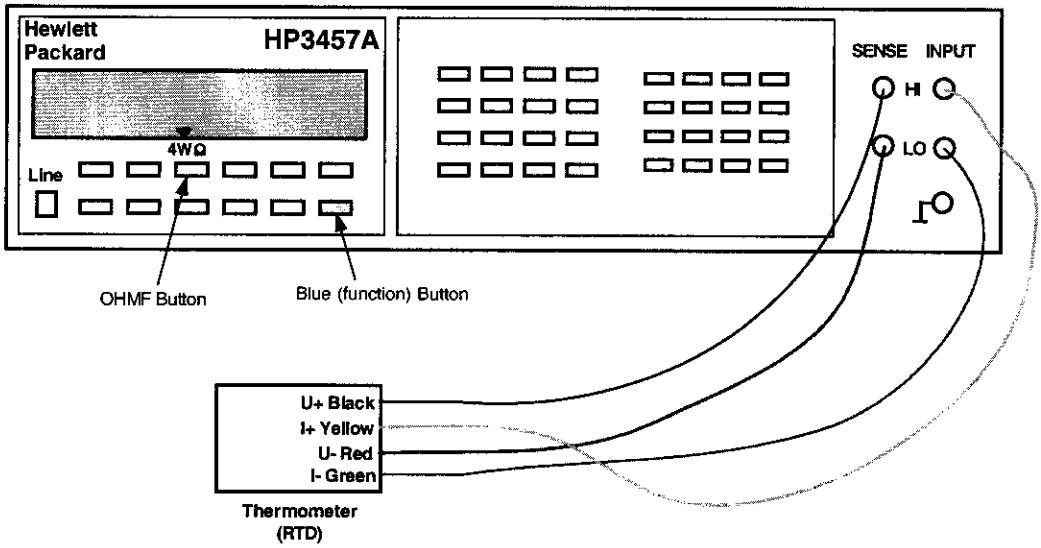

To measure the resistance of a Cryogenic (Warm-up) Heater

1. Use Hewlett Packard HP3457A digital multimeter.
2. Record temperature of building within +/- 5 degrees.
3. Press line button to turn line on.
4. Connect wires as shown in Figure below.
5. Push blue button (function key) once.
6. Push OHMF button.
7. Verify arrow in readout is above the 4W□ (meaning a 4 wire resistance measurement). Note: Although this is technically a 4 wire measurement, it is effectively a 2 wire measurement, since there are only 2 wires connected to each heater.
8. Read resistance in ohms and record in traveler.

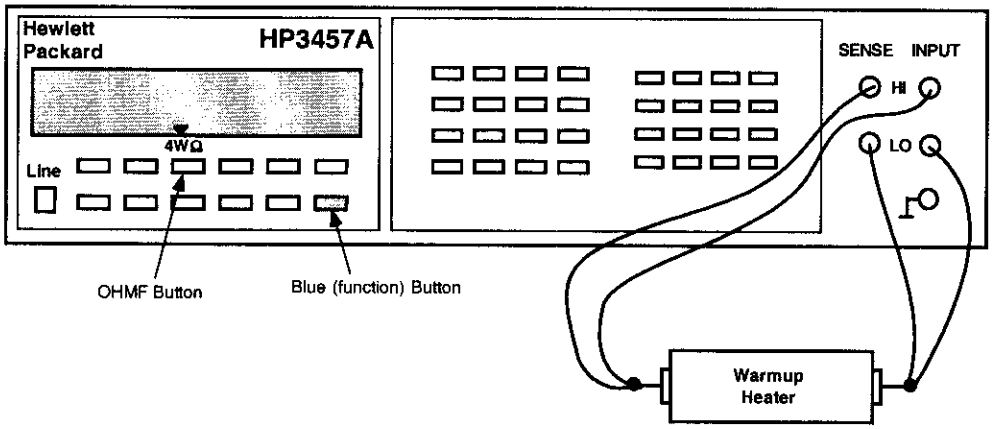

TABLE 7.0.1			
Q2a – RTD's and Cryogenic (warm-up) Heaters			
Temperature of Building (+/-5°):		Fermi	
			F°/C°
Component	Fermi	CERN	Fermi Resistance
Q2a RTD, primary Serial # Original Resistance Ω	TaQ2a	TT8312	5.23 Ω
Q2a RTD, redundant Serial # Original Resistance Ω	TbQ2a	TT8322	56.2 Ω
Q2A Cryogenic (warm-up) Heater (LE) – wire toward cold mass end plate (CERN #11+)	W1aQ2A	EH8312+	18.6 Ω
Q2A Cryogenic (warm-up) Heater (LE) – wire toward cold mass mag center (CERN #11-)	W2aQ2A	EH8312-	
Q2A Cryogenic (warm-up) Heater (Non-LE) – wire toward cold mass end plate (CERN #21+)	W1bQ2A	EH8322+	18.4 Ω
Q2A Cryogenic (warm up) Heater (Non-LE) – wire toward cold mass mag center (CERN #21-)	W2bQ2A	EH8322-	

Technician(s) _____ Date _____

LHC Serial No.: LQXB01-0

Notes: _____

TABLE 7.0.2			
Q2b – RTD's and Cryogenic (warm-up) Heaters			
Temperature of Building (+/-5°):	Fermi		
			F°/C°
Component	Fermi	CERN	Fermi Resistance
Q2b RTD, primary Serial # Original Resistance Ω	TaQ2B	TT8332	58.3 Ω
Q2b RTD, redundant Serial # Original Resistance Ω	TbQ2b	TT8342	56.0 Ω
Q2B Cryogenic (warm-up) Heater (LE) – wire toward cold mass end plate (CERN #11+)	W1aQ2b	EH8332 +	17.4 Ω
Q2B Cryogenic (warm-up) Heater (LE) – wire toward cold mass mag center (CERN #11-)	W2aQ2b	EH8332-	
Q2B Cryogenic (warm-up) Heater (Non-LE) – wire toward cold mass end plate (CERN #21+)	W1bQ2b	EH8342 +	18.1 Ω
Q2B Cryogenic (warm up) Heater (Non-LE) – wire toward cold mass mag center (CERN #21-)	W2bQ2b	EH8342-	

all > 20 Mohms to ground

Using the Hewlett Packard HP3457A digital multimeter, measure the Strip Heater Resistance for Q2a and Q2b.

TABLE 7.0.3				
Q2a Strip Heater Resistance				
Fermi	**CERN**	**Description**	**Limit**	**Fermi Resistance**
H1aQ2a	**YT1112+**	**Circuit A**	**18.20 to 21Ω**	19.8 Ω
H2aQ2a	**YT1112-**			
H1bQ2a	**YT1122+**	**Circuit B**	**18.20 to 21Ω**	19.9 Ω
H2bQ2a	**YT1122-**			

TABLE 7.0.4				
Q2b Strip Heater Resistance				
Fermi	**CERN**	**Description**	**Limit**	**Fermi Resistance**
H1aQ2b	**YT1132+**	**Circuit A**	**18.20 to 21Ω**	19.5 Ω
H2aQ2b	**YT1132-**			
H1bQ2b	**YT1142+**	**Circuit B**	**18.20 to 21Ω**	19.5 Ω
H2bQ2b	**YT1142-**			

MJ for Fred Lewis
Technician(s)

12/3/03
Date

LHC Serial No.: LQXB01-0
Notes: _____

8.0 Final Power Lead Electrical Inspection

8.1 Using the HP3457A, connect power thru the connector Power Leads (HA2 and HB2 to measure Q2-H2 or VA2 and VB2 to measure Q2-V2). Connect the Sense Leads as shown in table below and record resistance.

(Magnet Bus Leads)

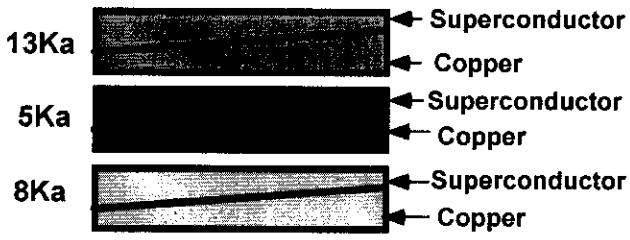

(Corrector Bus Leads)

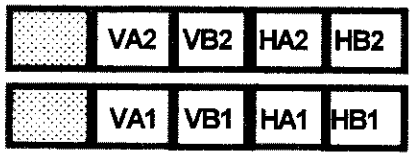

(View Looking into Q2b)

TABLE 8.0.1			
MCBX Corrector Coil Taps			
Component	**Fermilab Label**	**CERN Label**	**Fermi Resistance Nominal 0.040 Ω**
Q2-H2	**VTH2**	**EE8122**	Continuity checked with Ω
	HA2	**N/A**	
Q2-V2	**VTV2**	**EE8112**	2 wire measurement Ω
	VA2	**N/A**	

mjz for
Technician(s)

12/4/03
Date

XXX 8.2 Hipot according to table below. Hipot to 1500V. Ramp Rate XXV/second. Dwell Time 30 seconds. Maximum leakage is 3μA.

~~[illegible]~~ Note: VT1142 has a ≈ 30 Mohm short to ground & is ~~[illegible]~~ floating

Hipot Heaters to Coil and Ground.

TABLE 8.0.2			
High Potential	**Grounded**	**Floating**	**Fermi Leakage**
All Strip Heaters	Coils, Yoke, Q1 Instrumentation Bus, Lead and Corrector Coil Busses, RTD's and Warm-up Heaters	Nothing	< .1 μA

Hipot Coil to Heaters and Ground.

TABLE 8.0.3			
High Potential	**Grounded**	**Floating**	**Fermi Leakage**
All Coils	Strip Heaters, Yoke, Q1 Instrumentation Bus, 8kA and 5kA Lead Busses and Corrector Coil Busses, RTD's and Warm-up Heaters	Nothing	< .1 μA

Technician(s) Date

Responsible Authority/Physicist Date

8.3 Check Q1 Instrumentation Bus Wires for Continuity.

TABLE 8.0.4

Module	Pin	Fermi	CERN	KEK	Description	Fermi Done
M2	1	VTa1Q1	EE1111	a1	Q1 Lead Voltage Tap "a", primary	
M2	2	VTa2Q1	EE1121	a2	Q1 Lead Voltage Tap "a", redundant	
M2	3	VTc1Q1	EE1211	c1	Q1 Center Voltage Tap "c", primary	
M2	4	VTc2Q1	EE1221	c2	Q1 Center Voltage Tap "c", redundant	
M2	5	VTb1Q1	EE1311	b1	Q1 Lead Voltage Tap "b", primary	
M3	5	VTb2Q1	EE1321	b2	Q1 Lead Voltage Tap "b", redundant	
M5	1	VTH1	EE8121		Corrector voltage tap Q1-H1 (skew dipole) (on MCBX, MCBXH, A+ lead)	
M5	2	VTV1	EE8111		Corrector voltage tap Q1-V1 (normal dipole) (on MCBX, MCBXV A+ lead)	
M7	1	W1aQ1	EH8311+		Q1 Cryogenic Heater lead end - wire at top (CERN #1 I+)	
M7	2	W2aQ1	EH8311-		Q1 Cryogenic Heater lead end - wire at bottom (CERN #1 I-)	
M7	3	W1bQ1	EH8321+		Q1 Cryogenic Heater non-lead end - wire at top (CERN #2 I+)	
M7	4	W2bQ1	EH8321-		Q1 Cryogenic Heater non-lead end - wire at bottom (CERN #2 I-)	
M9	1	H1aQ1	YT1111+	HA1	Q1 Protection (Strip) Heater, ("a" circuit) (CERN lead #1+)	
M9	3	H2aQ1	YT1111-	HA2	Q1Protection (Strip) Heater, ("a" circuit) (CERN lead #1-)	
M9	5	H1bQ1	YT1121+	HB1	Q1 Protection (Strip) Heater, ("b" circuit) (CERN lead #2+)	
M10	4	H2bQ1	YT1121-	HB2	Q1 Protection (Strip) Heater, ("b" circuit) (CERN lead #2-)	
M12	1	TaQ1_I+	TT8311 I+		Q1 RTD, primary Wire color: Yellow	
M12	2	TaQ1_I-	TT8311 I-		Q1 RTD, primary Wire color: Green	
M12	3	TaQ1_V+	TT8311 U+		Q1 RTD, primary Wire color: Black	
M12	4	TaQ1_V-	TT8311 U-		Q1 RTD, primary Wire color: Red	
M12	5	TbQ1_I+	TT8321 I+		Q1 RTD, primary Wire color: Yellow	
M12	6	TbQ1_I-	TT8321 I-		Q1 RTD, primary Wire color: Green	
M12	11	TbQ1_V+	TT8321 U+		Q1 RTD, primary Wire color: Black	
M12	10	TbQ1_V-	TT8321 U-		Q1 RTD, primary Wire color: Red	✓

Technician(s) _____ Date _____

9.0 Shipping the Magnet

9.1 Acquire the Shipping Frame Assembly (ME-390686).

9.2 Acquire the following shipping hardware:

Eyebolt	McMaster-Carr 3016T87	6 ea
Eyebolt	McMaster-Carr 3016T85	6 ea
Hex Nut	MA-393328	24 ea
Flat Washer	MA-393328	12 ea
Lock Washer	MA-393329	12 ea
Chain w/2 Hooks	MA-390702	6 ea
Mouting Bolts	MA-393321	9 ea
Flat Washer	MA-393323	9 ea
Lcok Washer	MA-393322	9 ea
Hoist Rings	McMaster-Carr (2994767)	10 ea

9.3 Remove the Hoist Rings (4 ea) from the Outer Frame as per ME-390710.

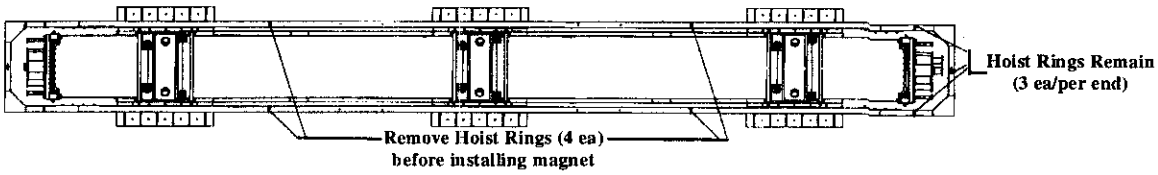

Technician(s) _____ Date _____

10.0 Magnet to Shipping Frame/Platform Installation

1-.1 Install Bellows End Sliding Flange Assembly (ME-390021) using Bolts XXX (XX ea)on both the Non-IP and IP Magnet Ends..

10.2 Transport the magnet to the Magnet Shipping Fixture and install using Bolt (MA-393321)(9 ea), Flat Washer (MA-393323)(9 ea), and Lock Washer (MA-393322)(9 ea). Torque bolts to XX FT/LBS.

Note: Apply a small amount of Anti-Seize (MX-XXXXXX) to all the bolt threads prior to installing the bolt.

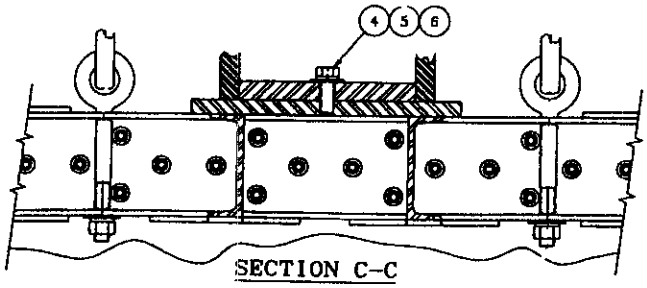

Q2 Shipping Assembly
ME-390710

10.3 Record Magnet Serial number below. Verify serial number matches the bottom of this traveler.

Magnet Serial Number	

10.4 Install Eyebolts, McMaster-Carr #3016T85 (6 ea), Eyebolts, McMaster Carr #3016T87 (6 ea), Flat Washer (MA-393328)(12 ea), and Lock Washer (MA-393329)(12 ea) into Shipping Fixture.

Note: Install all Eyebolts #3016T85 on one side of the shipping fixture. Eyebolts #3016T87 go on the opposite side.

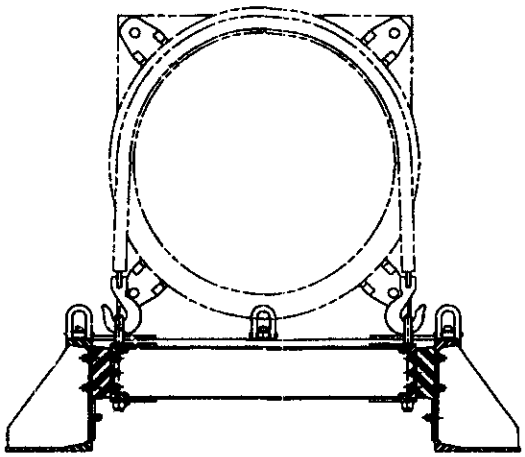

10.5 Install Lift All Pukka Wear Pad Protectors (MA-393345) onto magnet prior to installing Chain Sling.

_____ _____
Technician(s) Date

10.6 Install chain sling w/2 hooks (MA-390702) (6 ea) into eyebolts

_____ _____
Technician(s) Date

10.7 Tighten eyebolts until chains are snug.

_____ _____
Technician(s) Date

10.8 Install an additional nut (double nutting) on each eyebolt and tighten.

_____ _____
Technician(s) Date

11.0 Magnet End Preparation

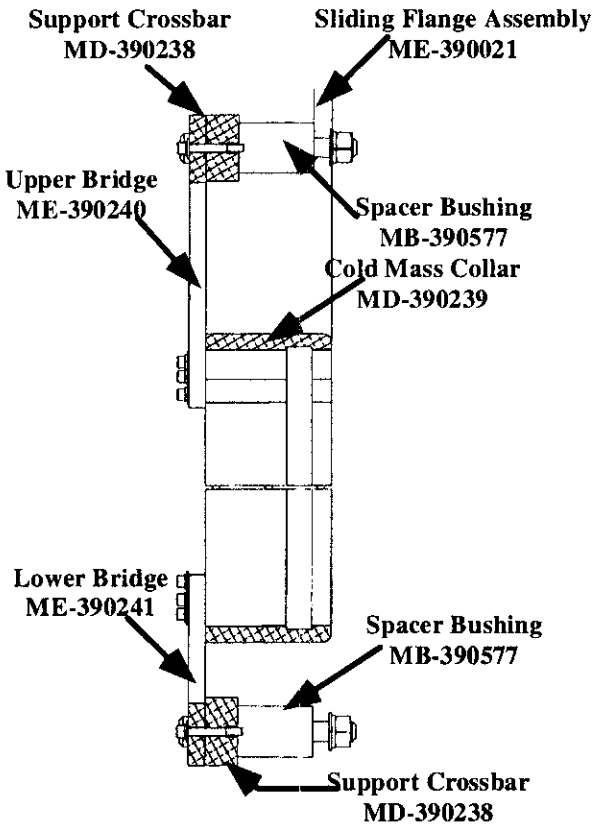

Shipping Restraint
ME-390249
Side View

11.1 Acquire Q2 Shipping Restraint Assembly (ME-390249)(2 ea)

_____ _____
Technician(s) Date

11.2 Install the Shipping Restraint on the Non- IP Magnet end.

Note: Installation Shipping Restraint bolts should be only finger tight until complete assembly is installed.

11.2.1 Install Cold Mass Collar (MD-390239) and secure using Bolt (MA-393191) (6 ea), and Washer (MX-XXXXXX)(X ea).
11.2.2 Install Upper Support Cross Bar (MD-390238)(1 ea) with Spacer Bushing (MB-390577) (2 ea) using Bolt (MA-393183 (2 ea), LockWasher (MA-393186) (4 ea), Plain Washer (MA-393185) (4 ea), and Nut (MA-393184)(2 ea).
11.2.3 Install Lower Support Cross Bar (MD-390238)(1 ea) with Spacer Bushing (MB-390577) (2 ea) using Bolt (MA-393183 (2 ea), LockWasher (MA-393186) (4 ea), Plain Washer (MA-393185) (4 ea), and Nut (MA-393184)(2 ea).
11.2.4 Install the Upper Bridge (ME-390240) to the Upper Support Bar using Bolt (MA-393187) (7 ea), Lock Washer (MA-393061) (7ea), and Flat Washer (MA-393060) (7ea).
11.2.5 Install the Lower Bridge (ME-390241) to the Lower Support Bar using Bolt (MA-393187) (7 ea), Lock Washer (MA-393061) (7ea), and Flat Washer (MA-393060) (7ea).
11.2.6 Secure Upper Bridge to Cold Mass Collar with Bolt (MA-393191) (6 ea), Lock Washer (MA-393061) (6 ea), and Plain Washer (MA-393060) (6 ea).
11.2.7 Secure Upper Bridge to Cold Mass Collar with Bolt (MA-393191) (6 ea), Lock Washer (MA-393061) (6 ea), and Plain Washer (MA-393060) (6 ea).
11.2.8 Tighten all the Shipping Restraint Bolts.

Technician(s) _____ Date _____

11.3 Install the Shipping Restraint on the IP Magnet end.

Note: Installation Shipping Restraint bolts should be only finger tight until complete assembly is installed.

11.3.1 Install Cold Mass Collar (MD-390239) and secure using Bolt (MA-393191) (6 ea), and Washer (MX-XXXXXX)(X ea).
11.3.2 Install Upper Support Cross Bar (MD-390238)(1 ea) with Spacer Bushing (MB-390577) (2 ea) using Bolt (MA-393183 (2 ea), LockWasher (MA-393186) (4 ea), Plain Washer (MA-393185) (4 ea), and Nut (MA-393184)(2 ea).
11.3.3 Install Lower Support Cross Bar (MD-390238)(1 ea) with Spacer Bushing (MB-390577) (2 ea) using Bolt (MA-393183 (2 ea), LockWasher (MA-393186) (4 ea), Plain Washer (MA-393185) (4 ea), and Nut (MA-393184)(2 ea).
11.3.4 Install the Upper Bridge (ME-390240) to the Upper Support Bar using Bolt (MA-393187) (7 ea), Lock Washer (MA-393061) (7ea), and Flat Washer (MA-393060) (7ea).
11.3.5 Install the Lower Bridge (ME-390241) to the Lower Support Bar using Bolt (MA-393187) (7 ea), Lock Washer (MA-393061) (7ea), and Flat Washer (MA-393060) (7ea).
11.3.6 Secure Upper Bridge to Cold Mass Collar with Bolt (MA-393191) (6 ea), Lock Washer (MA-393061) (6 ea), and Plain Washer (MA-393060) (6 ea).
11.3.7 Secure Upper Bridge to Cold Mass Collar with Bolt (MA-393191) (6 ea), Lock Washer (MA-393061) (6 ea), and Plain Washer (MA-393060) (6 ea).
11.3.8 Tighten all the Shipping Restraint Bolts.

Technician(s) _____ Date _____

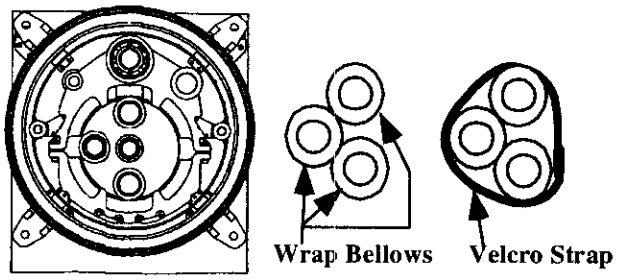

Q2 Magnet Non-IP End

11.4 Install Electrical Bus Shipping Restraint Short End Cover (MD-390752) into Lower Cold Mass Pipe to protect the Buss Wire.

11.5 Install Protective End onto PVC Bus Protector Tube.

11.6 Wrap the Cold Mass Bellows with Shipping Foam (Fermi Stk 1350-04000) as needed.

11.7 Secure wrapped bellows with Velcro Strap (Fermi Stk 1740-020500) as needed.

Technician(s) _____ Date _____

11.8 Insulate the magnet leads using ¾" Black Shrink Tubing (MA-318797). Ensure that the entire length of magnet leads are covered before heat shrinking.

11.9 Install Electrical Bus Shipping Restraint Assy (MD-390748).

Note: Magnet wires must be inserted into the Shipping Restraint Assy during installation.

Note: Shipping Restraint Assy is to be dry fit assembled, NOT GLUED!!!

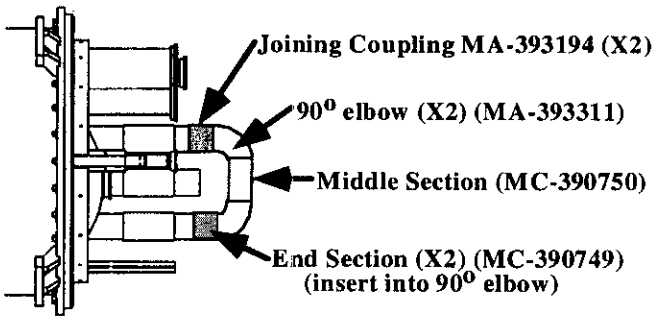

IP Magnet End
Side View

Technician(s) _____ Date _____

11.10 Install Protective Covers on flanges.

Technician(s) _____ Date _____

11.11 Install Acceleratoromators as per MX-XXXXXX.

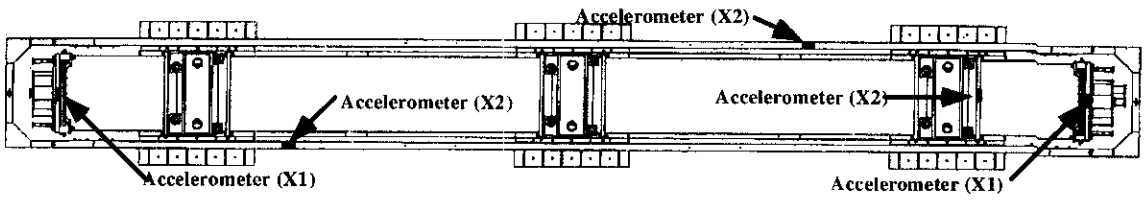

Technician(s) _____ Date _____

11.12 Install Magnet Identification Labels as per ME-390760.

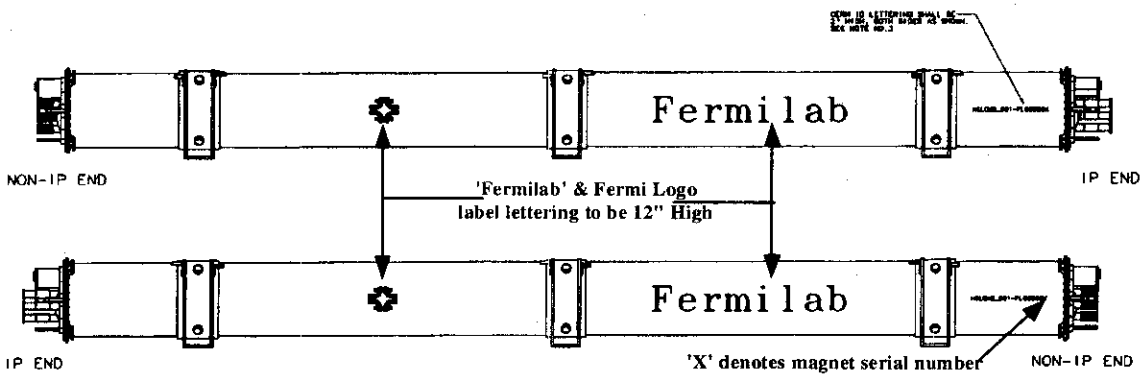

Technician(s) _____ Date _____

12.0 Final Inspection/Installation

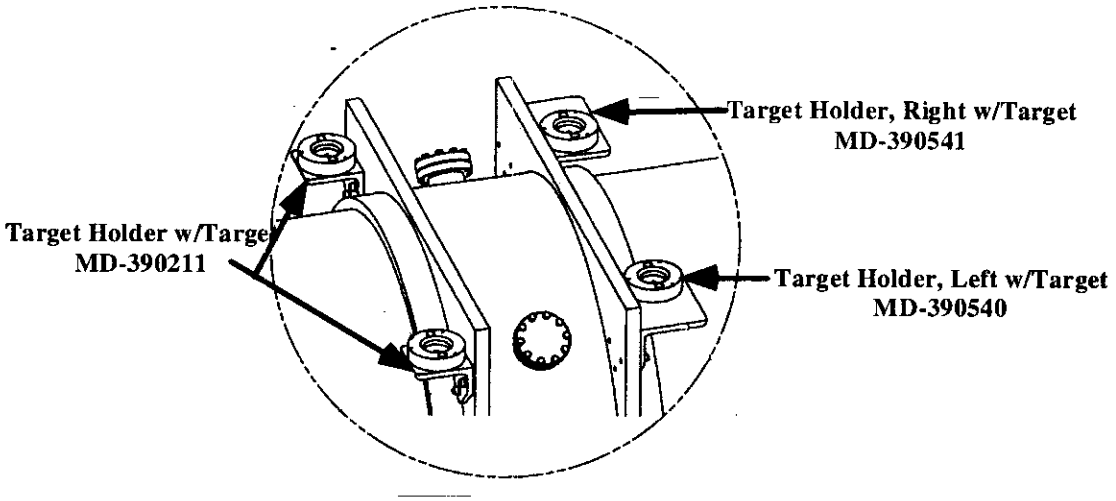

X 12.1 Verify Target Holder (MD-390211)(6 ea), Target Holder, Right (MD-390541)(3 ea), and Target Holder, Left (MD-390540)(3 ea) with Reference Cup (MA-390426)(12 ea) and Protective Cover (MX-XXXXXX) are installed.

Lead Person _____ Date _____

X 12.2 Verify that the Target Holder had been pinned using Roll Pins (MX-XXXXXX) as per Dwg MX-XXXXXX.

Lead Person _____ Date _____

12.3 Verify Magnet has been properly labeled/stenciled as per ME-390760.

Lead Person _____ Date _____

13.0 Documentation Update

13.1 Perform the following:

- Update DSR Keywords ☐
- Location ☐
- Location Verified Date ☐
- Status ☐
- Make entry regarding work performed. ☐

TD/E&F Production Supervisor/designee _____ Date _____

13.0 Production Complete

13.1 Process Engineering verify that the Traveler is accurate and complete. This shall include a review of all steps to ensure that all operations have been completed and signed off. Ensure that all Discrepancy Reports, Nonconformance Reports, Repair/Rework Forms, Deviation Index and dispositions have been reviewed by the Responsible Authority for conformance before being approved.

Comments:

See attachment at front of traveler

Process Engineering/Designee _____ Date 11/23/04