Fermilab

Fermi National Accelerator Laboratory
Technical Division
Engineering and Fabrication Department
P.O. Box 500
Batavia, IL 60510
Fax: (630) 840-8036

LHC Interaction Region Quadrupole LQXB
Engineering Note for Complete Magnet Testing at Fermilab

Rev	Date	Description	Originated by	Approved by
None	May 17, 2002	Original issue	T. Nicol	J. Kerby
A	August 8, 2002	Revised paragraphs 1.0, 3.1, 3.4, 4.1, 4.4, 4.5, 5.3, 5.3.1, 5.3.3 and Tables 3.3.1, 4.4.2, 4.4.3, 5.0.1, 5.3.1.1 based on initial review.	T. Page	T. Nicol

LHC Interaction Region Quadrupole LQXB
Engineering Note for Complete Magnet Testing at Fermilab

Table of Contents

Chapter 1
Engineering note for complete magnet testing at Fermilab
1.0 Introduction 4
1.1 Summary of results 5

Chapter 2
Cold mass assembly
2.0 Introduction 6
2.1 Cold mass skin and alignment key weld 8
2.2 Cold mass skin to end plate weld 10
2.3 End dome assembly 11
2.3.1 End dome 12
2.3.2 Cylindrical section 16
2.3.3 Cold mass pipes 17
2.3.4 Beam tube 18
2.4 End dome to end plate weld 20
2.5 Center tube 22
2.6 Non-pressure loads 25
2.6.1 Welding and cooldown 25
2.6.2 Gravity loads 26
2.7 Pressure testing 27
2.8 Summary 27

Chapter 3
Cryogenic piping
3.0 Introduction 28
3.1 Design codes and evaluation criteria 29
3.2 Materials 29
3.3 Pressure loading and analysis 29
3.3.1 Heat exchanger outer shell 30
3.3.1.1 End flanges 31
3.3.1.2 Cold mass connection 32
3.3.2 Heat exchanger inner tube 35
3.4 Summary 37

Chapter 4
Vacuum vessel
4.0 Introduction 38
4.1 Design codes and evaluation criteria 38

4.2 Materials 38
4.3 Structural loading and analysis 39
4.4 Pressure loading and analysis.....41
4.4.1 Connecting rings 43
4.4.2 End flanges.....44
4.4.3 Access ports 45
4.5 Summary.....46

Chapter 5
Interconnects
5.0 Introduction.....47
5.1 Design codes and evaluation criteria 47
5.2 Materials 48
5.3 Bellows design 48
5.3.1 Interconnect bellows 48
5.3.2 Vacuum vessel bellows.....49
5.3.3 Cold mass bellows 51
5.4 Summary.....52

Appendix A
Cold mass weld coupon tests.....A-1

Appendix B
Cold mass end dome and skin material certifications.....B-1

Appendix C
Vacuum vessel material certifications.....C-1

Chapter 1

LHC Interaction Region Quadrupole LQXB

Engineering note for complete magnet testing at Fermilab

1.0 Introduction

This document constitutes the engineering note for the LHC interaction region quadrupoles being fabricated at Fermilab. It addresses the adequacy of the design and installation for testing single magnets at the Magnet Test Facility (MTF) within the Technical Division of Fermilab. Both generic and specific issues are addressed. Generic issues are those that pertain to the individual magnets themselves. Specific issues are those that apply only to the operating modes at Fermilab. For example, relief piping and relief valve analyses and discussions apply only to this specific installation, are not applicable to a string of magnets, and we make no attempt to generalize to that extent.

The magnet, piping and vacuum vessels will not be ASME Boiler and Pressure Vessel Code stamped vessels (hereinafter referred to as "the Code"). We do meet the Fermilab requirement to apply the design rules of the Code such that the intent of the Code is realized, i.e. that the geometry of all welds are consistent with the Code, that allowable stresses are met, etc. Fermilab manufacturing practices do not meet all of the Code requirements, most notably the continuous monitoring of all production processes, radiography of welds, etc. For that reason, Fermilab procedures require that allowable stresses be de-rated to 80% of their Code values. For the design and analysis of internal piping, we have applied the rules and practices outlined in ASME Code for Pressure Piping, B31.3, "Chemical Plant and Petroleum Refinery Piping". We have designed the bellows according to the standards of the Expansion Joint Manufacturers Association, Inc. (EJMA).

The chapters and appendices included in this note address each of the following major magnet systems in detail. Refer to the table of contents for the exact location of each analysis or component.

- Cold mass
- Internal piping
- Vacuum vessel
- Interconnects

1.1 Summary of results

It will be shown in each of the following chapters that the design of each magnet system is consistent with the operating requirements at MTF. Chapter 2 will address the cold mass in detail and will document a maximum allowable working pressure (MAWP) of 290 psi. The system relief settings at MTF are set at or below 100 psi. Chapter 3 will address the design of all internal piping and will show that it satisfies the requirements of ASME B31.3, when subject to the operating temperatures and pressures summarized in table 3.0.1. Chapter 4 documents the design and analysis of the vacuum vessel and shows that it meets the requirements of the Code as it applies to vacuum vessels and to section 5033 of the Fermilab ES&H manual when subject to all the applicable structural loads and the insulating vacuum load. Finally, chapter 5 documents the design and analyses of all interconnect bellows. The requirements, design rules, and calculation guidelines of the Expansion Joint Manufacturers Association (EJMA) were used throughout this chapter. EJMA is the recognized standards organization for bellows and is referred to throughout the ASME Boiler and Pressure Vessel Code.

We believe the designs of the systems documented in this note are adequate to ensure that their operation represents no hazard to personnel or to any of the external systems to which they will be connected.

Chapter 2

LHC Interaction Region Quadrupole

Q2 Cold Mass Assembly

2.0 Introduction

The Q2 cold mass assembly in an LHC IR quadrupole consists of two individual cold masses welded together to form one helium containment vessel. Each cold mass consists of the following major components.

- Quadrupole collared coil assembly
- Cold iron yoke
- Outer helium containment vessel

The helium containment vessel of the combined cold masses consists of the following.

- Four 304L stainless steel skins (half shells)
- Four 304L stainless steel alignment keys
- Four 304L stainless steel end plates
- Two 304 stainless steel end dome assemblies
- One 304 stainless steel center tube
- One 316LN stainless steel beam tube

The purpose of the cold mass assembly is to maintain the collared coil assembly at its nominal operating temperature of 1.9 K and to act as the transport mechanism for liquid helium between magnets when they are installed at CERN. Under normal operating conditions, the temperature of the vessel is 1.9 K with an internal pressure of 4.4 psig [1.3 bar].

The cold mass must satisfy all the requirements of the “Pressure Vessels” section (section 5031) of the Fermilab ES&H Manual. This section states that all applicable vessels shall adhere to the requirements of the ASME Boiler and Pressure Vessel Code Section, VIII. This vessel will not be an ASME code stamped vessel. The intent of the design is to address and adhere to as many requirements of the ASME code as possible.

The assembly can be seen in Figure 2.0.1.

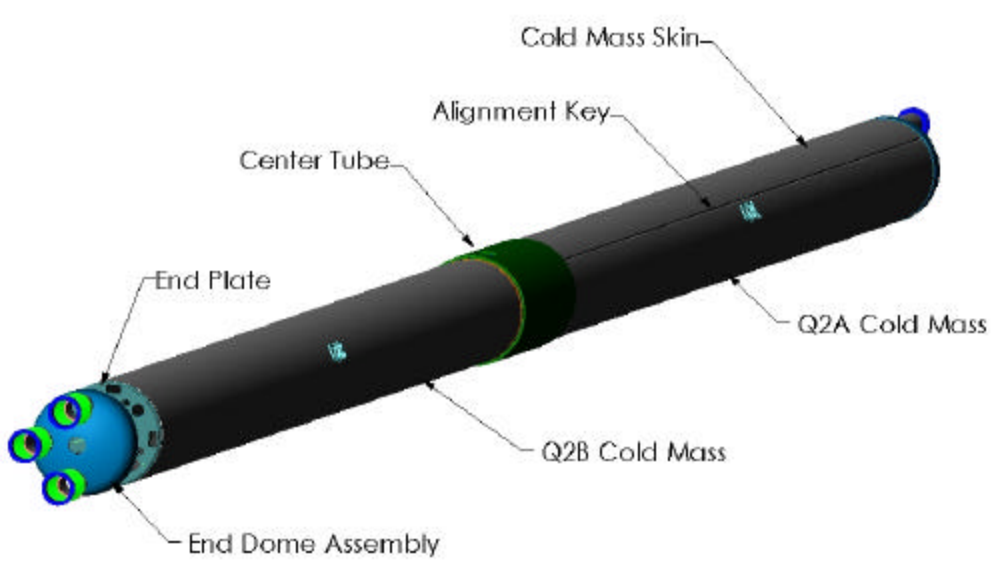

Figure 2.0.1 Cold Mass Assembly

The maximum stress that is allowed by Section II, Part D, Table 1A of the Code is as follows:

304 stainless steel: 20,000 psi

304L stainless steel: 16,700 psi

316LN stainless steel: 20,000 psi.

Section 5031 of the Fermilab ES&H Manual requires de-rating of the allowable stress to 80% of the allowed value in cases where the vessel is either fabricated in-house or is not

code-stamped. This reduces the allowed stress in pressure vessel calculations to the following:

304 stainless steel: 16,000 psi

304L stainless steel: 13,360 psi

316LN stainless steel: 16,000 psi.

The design pressure for the LHC IR quadrupoles for CERN is 290 psi. This design pressure is the MAWP of the cold mass assembly. Should a quench occur on the test stand, there is no risk of over-pressurizing the cold mass since the feedbox at MTF is rated for 100 psi and has a relief set at or below this value.

2.1 Cold mass skin and alignment key weld

There was extensive testing and analysis in order to qualify this weld during the short model program. Samples were tested by outside firms. These tests included inclusion density, delta ferrite content, tension and charpy impact tests. The full reports can be seen in Appendix A. Also, a QA plan for production cold masses was created and agreed upon by both Fermilab and CERN. Each production cold mass will have a visual inspection, delta ferrite test, leak check and pressure test. The full agreement can be seen in Appendix A.

The cold mass skin consists of two half shells welded together longitudinally with an alignment key. A cross section through the cold mass is shown in Figure 2.1.1.

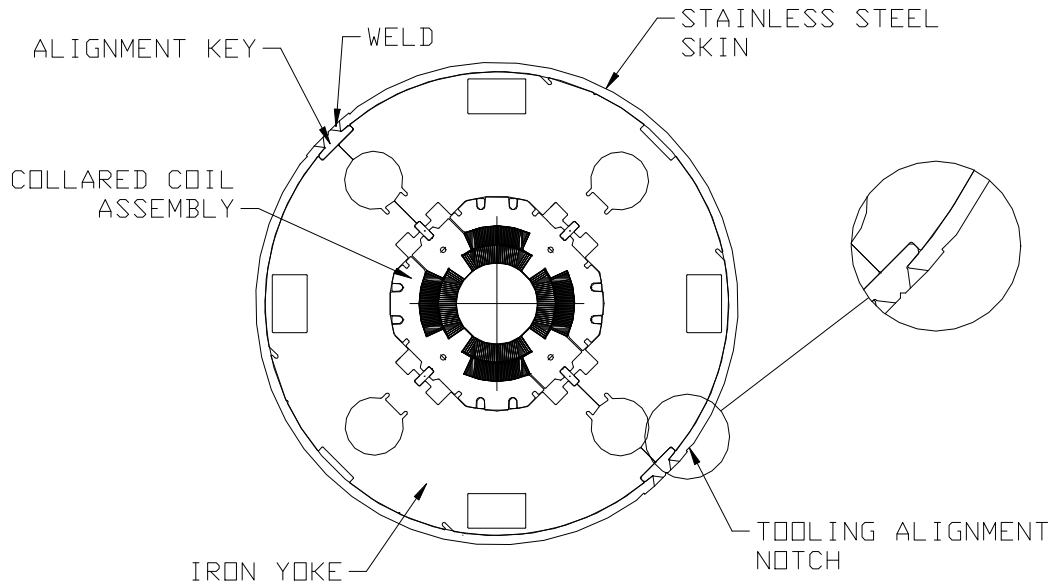

Figure 2.1.1

The alignment key weld is a Category A, Type 2 weld as described in UW-3 and UW-12 of the Code. It is a single welded butt joint with a backing strip and no radiographic examination, therefore the joint efficiency, E, is 0.65. The design pressure used in this calculation is 290 psi.

The minimum thickness requirement is given by UG-27 and is the larger of:

$$t = \frac{PR}{SE - 0.6P}$$

or

$$t = \frac{PR}{2SE + 0.4P}$$

where: P = internal design pressure = 290 psi

R = inside radius of shell = 7.874 inches

S = allowable material stress = 13,360 psi

E = joint efficiency = 0.65

For this case, t = 0.268 inches is the larger value. The minimum skin thickness is 0.269 inches, which is located at the tooling alignment notch as shown in Figure 2.1.1, so this requirement is satisfied.

2.2 Cold mass skin to end plate weld

The cold mass skin to end plate weld conforms to UW-13.2 (d) of the Code and is shown in Figure 2.2.1.

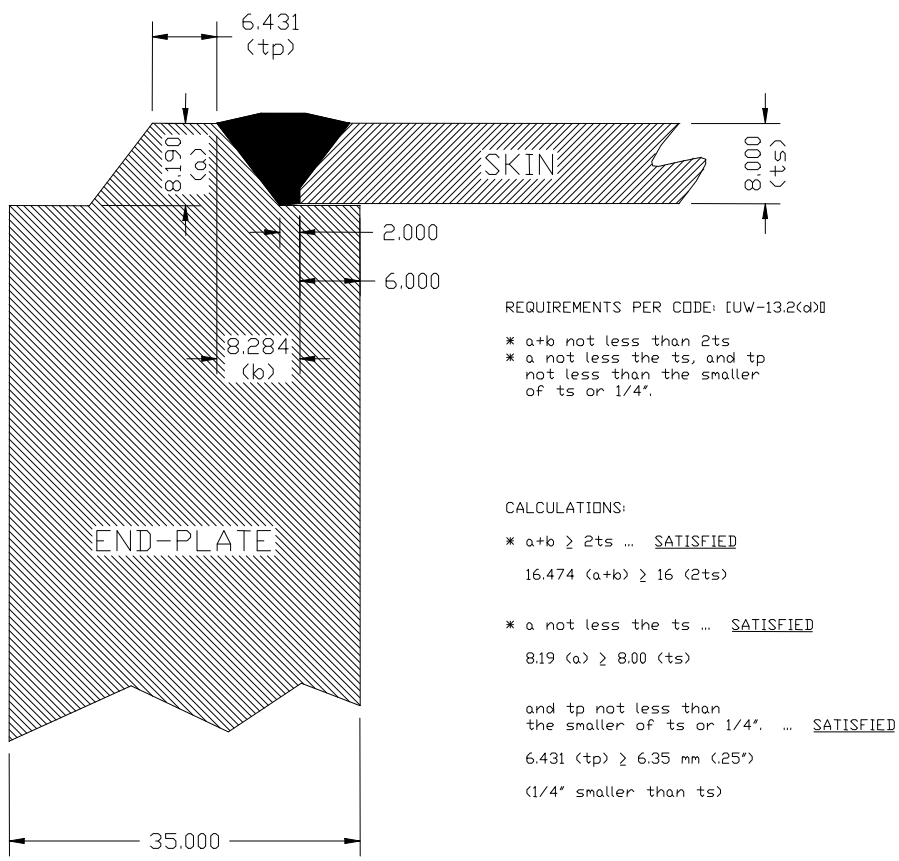

Figure 2.2.1 Detail of cold mass skin to end plate weld.

Using the notation from the figure:

$a = 8.190$ mm

$b = 8.284$ mm

$t_s = 8.00$ mm

$t_p = 6.43$ mm

UW-13.2 (d) requires that:

(1) $a+b \geq 2t_s$

(2) $a \geq t_s$

(3) $t_p \geq t_s$ or $t_s \geq$ ¼ in (6.35 mm)

All three requirements are satisfied. Technically, Figure UW13.2 (d) applies to a shell welded to a pressure head. In this design, the end plate is not a pressure head but the weld was designed as such.

2.3 End dome Assembly

The end dome assembly is attached to both ends of the cold mass to create the helium containment vessel. There are pipes attached to openings in the dome as shown in Figure 2.3.1. These pipes transport helium as well as provide a feedthrough for the wiring between the magnet and the feedbox when installed at MTF.

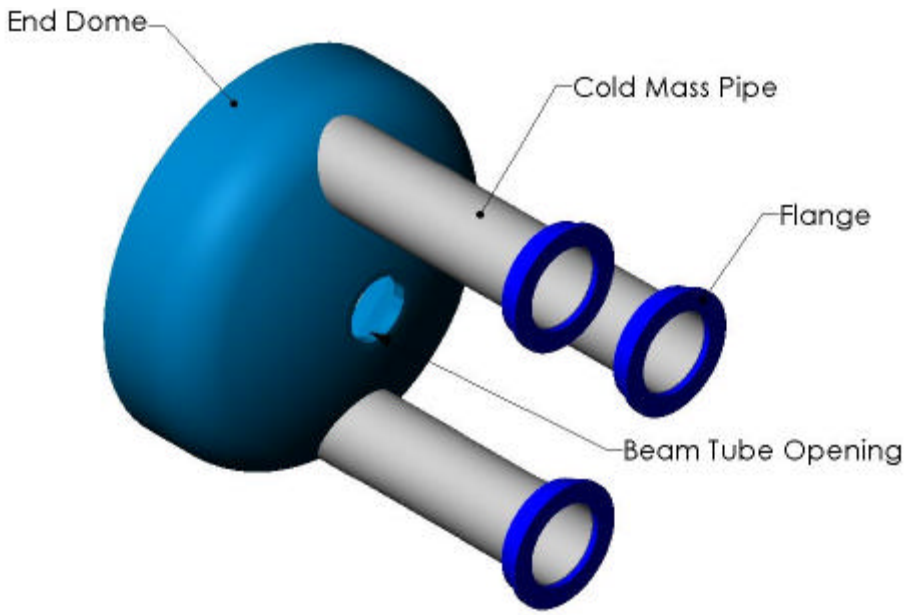

Figure 2.3.1 End Dome Assembly

2.3.1 End dome

The end dome is a formed ellipsoidal head. The minimum required thickness is given by UG-32 (d)

$$t = \frac{PD}{2SE - 0.2P}$$

where:

t = minimum required thickness of head after forming, inches

P = internal design pressure = 290 psi

D = inside length of the major axis (ID) = 15.748 inches

S = allowable material stress = 16,000 psi

E = joint efficiency = 0.60

Calculating:

t = [290(15.748)]/[(2*16000*.06)-0.2*290] = 0.239 inches

The head thickness is 0.562 inches so this requirement is satisfied.

This is the minimum required thickness for the end dome without any openings. Since there are openings in the dome, the requirement for reinforcement must be checked. There are four openings in the dome so the requirement for reinforcement is given by UG-42 of the Code, “Reinforcement of Multiple Openings”. The center opening is for the beam tube. The other three openings are for the cold mass pipes. When considering the required reinforcement, Section UG-42 (a) (3) states “A series of openings all on the same center line shall be treated as successive pairs of openings.” From this statement and the symmetry in the hole pattern, only two adjacent openings need to be addressed. These are the center opening and one of the three pipe openings. See Figure 2.3.1.1.

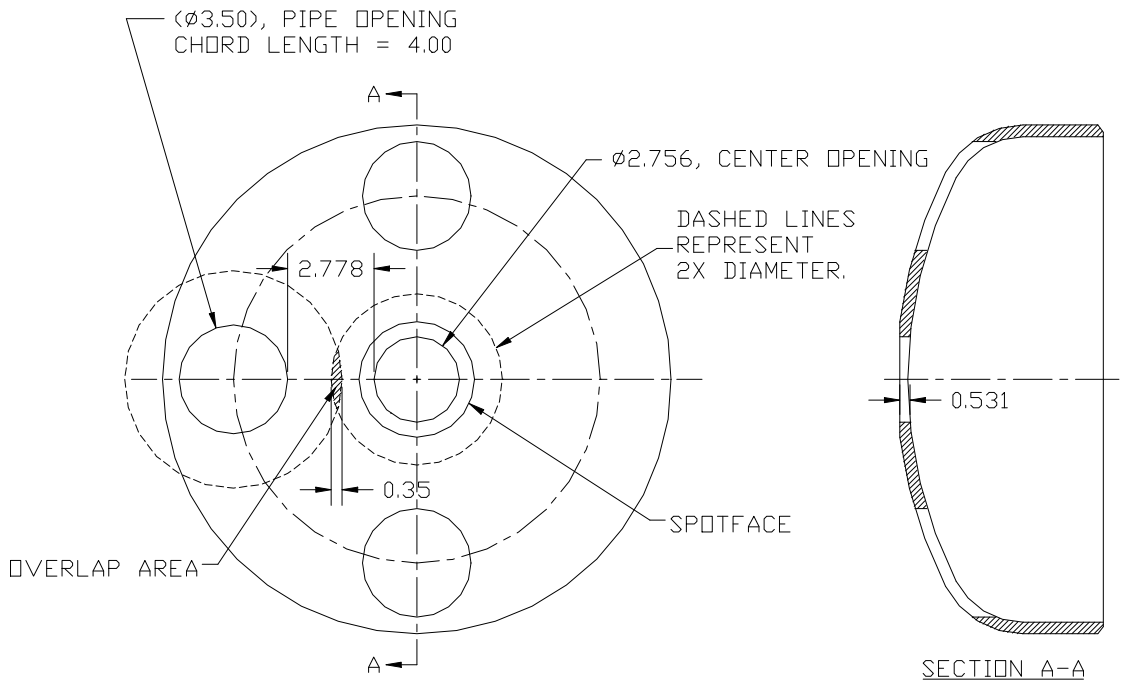

Figure 2.3.1.1 Detail of dome.

Section UG-37 of the Code requires that the minimum area of reinforcement for these openings is:

$$A_r = dt_rF + 2t_nt_rF(1 - f_{r1})$$

where: A_{r1} = are required for center hole

A_{r2} = are required for pipe hole

d_1 = inside diameter of center opening = 2.756 inches

d_2 = inside diameter (chord length) of pipe opening = 4.00 inches

t_r = minimum required thickness of the shell = 0.239 inches

F = correction factor = 1

t_{n1} = nozzle wall thickness for center opening = 0.157 inches

t_{n2} = nozzle wall thickness for pipe opening = 0.065 inches

f_{r1} = strength reduction factor = 1

For this case, A_{r1} = 0.658 in^2 and A_{r2} = 0.954 in^2.

The area for reinforcement available in the dome is given by the larger of:

$$A_{ac} = d(E_1t - Ft_r) - 2t_n(E_1t - Ft_r)(1 - f_{r1})$$

or

$$A_{ac} = 2(t + t_n)(E_1t - Ft_r)-2t_n(E_1t - Ft_r)(1 - f_{r1})$$

where: A_{ac1} = calculated required area for the center opening

A_{ac2} = calculated required area for the pipe opening

E_1 = weld efficiency = 1

t = dome thickness = 0.562 inches

t_{co} = dome thickness at spotface, thickness used for center opening = 0.531 inches

The larger values for each area are found to be: A_{ac1} = 0.806in^2 and A_{ac2} = 1.294 in^2 from the two expressions above.

It can be seen that these openings are spaced at less than two times their average diameter. Section UG-42 (a) (1) of the Code requires that the available area between

openings shall be proportioned between the two openings by the ratio of their diameters. The overlap area is given by:

$$A_{over} = (\text{ratio})\ L_{over}\ (t - t_r)$$

where: A_{over1} = overlap area of the center opening

A_{over2} = overlap area of the pipe opening

L_{over} = length of overlap = 0.35 inches

$ratio_1$ = ratio for center opening = $d_1/(d_1+d_2) = 0.41$

$ratio_2$ = ratio for pipe opening = $d_2/(d_1+d_2) = 0.59$

This gives $A_{over1} = 0.045\ in^2$ and $A_{over2} = 0.068\ in^2$. The overlap area from the center opening is subtracted from the available reinforcement area of the pipe opening and vice versa. This leads to the available area for each opening as follows:

$$A_{a1} = A_{ac1} - A_{over2} \qquad \text{and} \qquad A_{a2} = A_{ac2} - A_{over1}$$

This results in the true available reinforcement area for each opening: $A_{a1} = 0.738\ in^2$ and $A_{a2} = 1.248\ in^2$. The available areas are greater than the required areas, so this requirement is met.

Section UG-42 (2) requires that at least 50% of the required area of reinforcement must be between the two openings. The required area between the openings is given by:

$$A_{50\%R} = (A_{r1} + A_{r2})/2 = 0.806\ in^2.$$

The actual area available between openings is given by:

$$A_{between} = L_{between}\ (t - tr)$$

where: $L_{between}$ = distance between openings = 2.778 inches

This gives $A_{between}$ = 0.898 in^2. This requirement is satisfied.

All the requirements of the Code have been satisfied for an internal pressure of 290 psi.

2.3.2 Cylindrical section

The dome consists of the ellipsoidal portion as well as a small straight cylindrical section. This can be seen in Figure 2.3.1.1. This section is treated as cylindrical shell and the required thickness is given by UG-27 of the Code. The minimum thickness is given by the larger of:

$$t = \frac{PR}{SE - 0.6P}$$

or

$$t = \frac{PR}{2SE + 0.4P}$$

where: P = internal design pressure = 290 psi

R = inside radius of shell = 7.874 inches

S = allowable material stress = 16,000 psi

E = joint efficiency = 0.60

For this case, t = 0.242 inches is the larger value. The shell thickness is 0.315 inches at its minimum so this requirement is satisfied.

2.3.3 Cold mass pipes

The welds between the cold mass pipes and the end dome are all single sided welds made on the outside of the dome. The maximum load on the weld is a combined load due to the internal pressure and the attached bellows. The force due to internal pressure is equal to the cross sectional area in the pipe multiplied by the design pressure. Using the design pressure of 175 psi, this force is equal to 2,600 lbs. The bellows has an axial spring constant of 68 lb/in and a maximum travel of 1.67 inches. This results in a bellows force of 114 lbs. This force is combined with the force due to internal pressure for a combined force of 2,714 lbs.. As shown in Fermilab drawings 5520-MD-390197 and 5520-MD-390198, these welds are specified to be a 2 mm (0.08 inch) fillet weld. The stress on the weld is given by

$$t_w = \frac{f_a}{(l)(t_w)}$$

where: τ_w = shear stress in the weld

f_a = axial force = 2,714 lb

l = linear length of weld = 11.0 inches

t_w = weld equivalent thickness = 2 mm/√2 = 1.414 mm = 0.056 inch

For this case, the weld stress, τ_w, is 4,406 psi which is well below that allowed by UW-15 of the Code given by:

(20,000 psi)(0.8)(0.49) = 7,840 psi

The welds between the cold mass pipes and the end flanges are category C lap welds as described in UW-3 (a) (2) and UW-9 (e) of the Code. UW-9(e) requires that the overlap be not less than four times the thickness of the inner plate. In the case of the cold mass pipe, the tube thickness is 0.065 inch. The overlap at the end flanges is 0.67 inch so the requirement is met. The only load acting on this flange is an axial load from the

maximum design pressure of 290 psi. The total axial force acting on the flange is 2,600 lb. At the end flange, this force is resisted by the weld between the cold mass pipe and the end flange. As shown on Fermilab drawing 5520-MD-390197, this weld is specified to be a 2 mm (0.08 inch) fillet. The stress on the weld is given by

$$s_w = \frac{f_a}{(l)(t_w)}$$

where: σ_w = stress in the weld

f_a = axial force = 2,600 lb

l = linear length of weld = 11.0 inches

t_w = weld equivalent thickness = 2 mm/√2 = 1.414 mm = 0.056 inch

For this case, the weld stress, σ_w, is 4,221 psi which is well below that allowed by UW-18 of the Code given by:

(20,000 psi)(0.8)(0.55) = 8,800 psi

2.3.4 Beam tube

The beam tube is inserted through the center of the cold mass. The internal pressure of the cold mass acts as an external pressure on the beam tube. The thickness of a shell or tube under external pressure is given by section UG-28 of the Code. Following the Code steps:

(c) *Cylindrical Shells and Tubes*. The required minimum thickness of a cylindrical shell or tube under external pressure, either seamless or with longitudinal butt joints, shall be determined by the following procedure.

(1) *Cylinders having D_0/t values ³ 10*:

Step 1. Assume a value for t and determine the ratio L/D_0 and D_0/t.

For this case t=1.85 mm, D_0=66.5 mm and L=13 m.
Then, L/D_0>50 and D_0/t=35.95.

Step 2. Enter Fig. G in Subpart 3 of Section II, Part D of the Code at the value of L/D_0 determined in Step 1. For values of L/D_0 greater than 50, enter the chart at a value of L/D_0=50.

Step 3. Move horizontally to the line for the value of D_0/t determined by Step 1. Interpolation may be made for intermediate values of D_0/t. From this point of intersection, move vertically downward to determine the value of factor A. From the chart A=0.0009

Step 4. Using the value A calculated in Step 3, enter the applicable material chart in Subpart 3 of Section II, Part D of the Code for the material under consideration. Move vertically to an intersection with the material/temperature line for the design temperature.

Step 5. From the intersection obtained in Step 4, move horizontally to the right and read the value of factor B.

From Fig. HA-2 for 316LN stainless steel, for A=0.0009 and for operation up to 100 F, B=9290.
Step 6. Using the value of B, calculate the value of the maximum allowable external working pressure P_a using the following formula:

$$P_a = \frac{4B}{3(D_o/t)}$$

This gives P_a=344.6 psi. This requirement is satisfied.

The weld between the beam tube and the flange is a category C lap weld as described in UW-3 (a) (2) and UW-9 (e) of the Code. UW-9(e) requires that the overlap be not less than four times the thickness of the inner plate. In the case of the beam tube, the tube thickness is 0.073 inch. The overlap at the end flanges is 0.73 inch so the requirement is met. The only load acting on this flange is an axial load from the maximum design pressure of 290 psi. The total axial force acting on the flange is 174 lb. At the flange, this force is restricted by the weld between the beam tube and the flange and also by the weld between the flange and the end dome. It will be assumed that only one weld is resisting the load and the smaller weld will be chosen. This is the weld between the beam tube and the flange. The stress on the weld is given by

$$s_w = \frac{f_a}{(l)(t_w)}$$

where: σ_w = stress in the weld

f_a = axial force = 174 lb

l = linear length of weld = 7.76 inches

t_w = weld equivalent thickness = 1.8 mm/√2 = 1.27 mm = 0.050 inch

For this case, the weld stress, σ_w, is 450 psi which is well below that allowed by UW-18 of the Code given by:

$$(20{,}000 \text{ psi})(0.8)(0.55) = 8{,}800 \text{ psi}$$

2.4 End dome to end plate weld

The end dome to end plate weld conforms to ASME Code, UW-13.2 (d) and is shown in Figure 2.4.1.

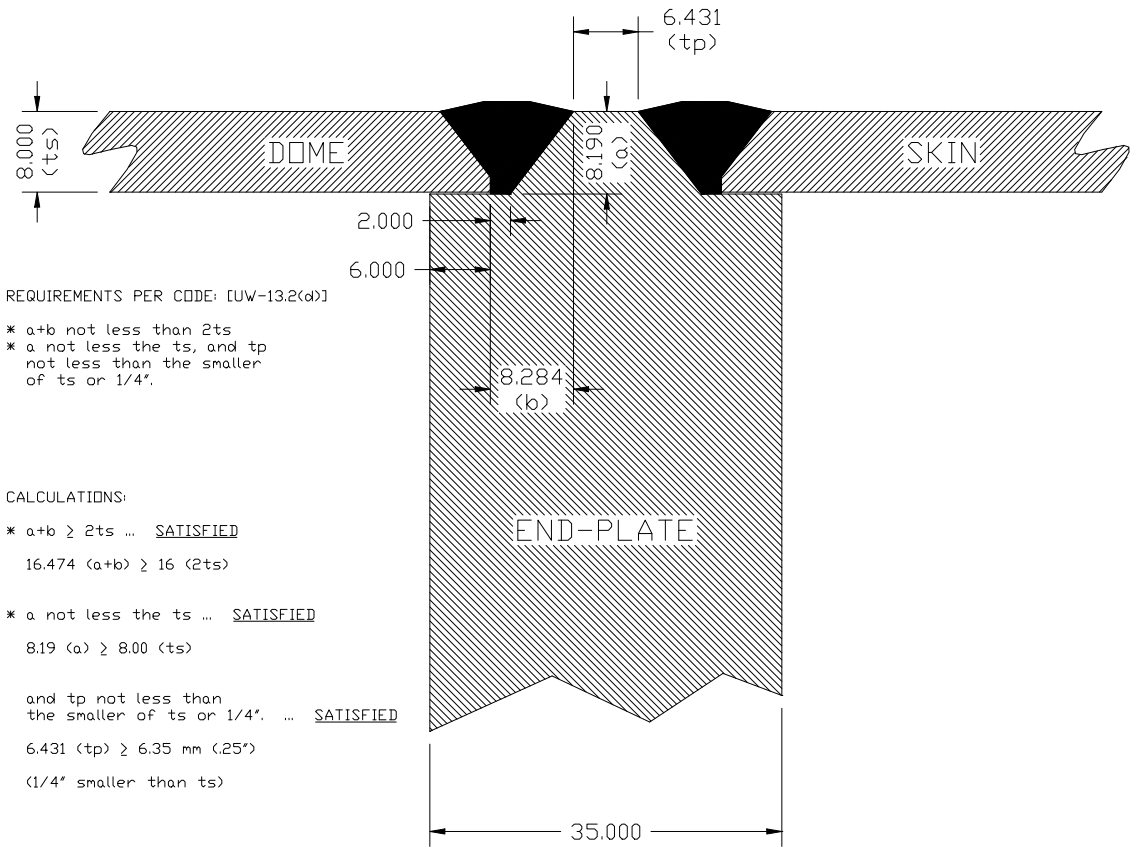

Figure 2.4.1 Detail of cold mass skin to end plate weld.

Using the notation from the figure:

$a = 8.190$ mm

$b = 8.284$ mm

$t_s = 8.00$ mm

$t_p = 6.43$ mm

UW-13.2 (d) requires that:

(1) $a+b \geq 2t_s$

(2) $a \geq t_s$

(4) $t_p \geq t_s$ or $t_s \geq ¼$ in (6.35 mm)

All three requirements are satisfied.

2.5 Center tube

The minimum thickness requirement is given by UG-27 and is the larger of:

$$t = \frac{PR}{SE - 0.6P}$$

or

$$t = \frac{PR}{2SE + 0.4P}$$

where: P = internal design pressure = 290 psi

R = inside radius of shell = 8.248 inches

S = allowable material stress = 16,000 psi

E = joint efficiency = 0.7

For this case, t = 0.217 inches is the larger value. The minimum skin thickness is 0.374 inches, so this requirement is satisfied.

The center tube connects to the heat exchanger outer shell through a short vertical tube. The requirement for reinforcement must be checked since there is an opening in the center tube. Section UG-37 of the Code requires that the minimum area of reinforcement for this opening is:

$$A_r = dt_rF + 2t_nt_rF(1 - f_{r1})$$

where: A_r = area required

d = inside diameter of opening = 3.75 inches

t_r = minimum required thickness of the center tube = 0.217 inches

F = correction factor = 1

t_n = nozzle wall thickness = 7.95 mm = 0.312 inches

f_{r1} = strength reduction factor = 1

For this case, $A_r = 0.814$ in^2. The area of reinforcement available in the shell is given by the larger of:

$$A_1 = d(E_1t - Ft_r) - 2t_n(E_1t - Ft_r)(1 - f_{r1})$$

or

$$A_1 = 2(t + t_n)(E_1t - Ft_r)-2t_n(E_1t - Ft_r)(1 - f_{r1})$$

where: E_1 = weld efficiency = 1

t = vessel wall thickness = 0.374 inches

For this case, $A_1 = 0.589$ in^2 from the two expressions above. The available area in the shell is less than the required area so the reinforcement in the nozzle must be evaluated.

The minimum thickness of the nozzle is given by UG-27 and is the larger of:

$$t_{rn} = \frac{PR_n}{SE - 0.6P}$$

or

$$t_{rn} = \frac{PR_n}{2SE + 0.4P}$$

where: R_n = inside radius of nozzle = 1.875 inches

For this case, $t_{rn} = 0.049$ inches is the larger value. The nozzle thickness is 0.312 inches, so this requirement is satisfied.

The reinforcement area available in the nozzle is given by the smaller of:

$$A_2 = 5(t_n - t_{rn})t$$

or

$$A_2 = 5(t_n - t_{rn})t_n$$

For this case, $A_2 = 0.410$ in^2 from the two expressions above. The total available area of reinforcement is given by:

$$A_{tot} = A_1 + A_2$$

For this case, $A_{tot} = 0.999$ in^2 which is larger than the required area of reinforcement, so this requirement is satisfied.

The welds that connect the center tube to the cold masses are single sided fillet welds. The maximum load on the weld is an axial load due to the internal pressure. The force due to internal pressure is equal to the cross sectional area in the center tube multiplied by the design pressure. Using the design pressure of 290 psi, this force is equal to 62,000 lbs. As shown in Fermilab drawing 5520-ME-390309, this weld is specified to be a 12 mm (0.472 inch) fillet weld. The stress on the weld is given by

$$t_w = \frac{f_a}{(l)(t_w)}$$

where: τ_w = shear stress in the weld

f_a = axial force = 62,000 lb

l = linear length of weld = 51.8 inches

t_w = weld equivalent thickness = 12 mm/$\sqrt{2}$ = 8.485 mm = 0.334 inch

For this case, the weld stress, τ_w, is 3,584 psi which is below that allowed by UW-15 of the Code given by:

$$(20{,}000 \text{ psi})(0.8)(0.49) = 7{,}840 \text{ psi}$$

2.6 Non-pressure loads

The primary stress in the cold mass assembly is due to internal pressure. There are, however, other stress inducing loads that must be addressed. These are discussed in sections 2.6.1 and 2.6.2.

2.6.1 Welding and cooldown

There is stress in the cold mass skin due to shrinkage that occurs during welding and cooldown and due to mechanical support of the magnet in the vacuum vessel. This can be broken down as follows: 14,550 psi due to initial welding, 29,020 psi due to cooldown, 3,600 psi due to welding the attachment lugs, and 1,210 psi acting at the supports (see 2.6.2) giving a total combined stress at operating temperature of 48,380 psi (331 MPa). The initial weld-induced stress was measured during construction using strain gages mounted directly to the skin. The cooldown stress is estimated by calculation, which can be seen in Fermilab technical document TD-00-025. This stress is constant at the operating temperature regardless of internal pressure and is not considered by Division 1 of the Code. Division 2 of the Code considers this a secondary stress[(1)]. The allowable stress is given by Paragraph 4-134 of Division 2:

$$s_a = 3 s_m f$$

where: σ_a = allowable stress

σ_m = stress from Sec. 2, Part D, Table 1A for 304L S.S. = 16,700 psi

f = Fermilab de-rating factor = 0.8

For this case, σ_a = 40,080 psi. The stress in the skin of 48,380 is higher than that allowed by Division 2 of the Code.

[1] "Classification of Stresses For The Skin Of The Cold Mass", Robert L. Cloud & Associates, Inc. prepared for the SSC.

The cold mass attachment lugs are welded to the cold mass skin at six places using a two-pass weld. It is difficult to assess the stress resulting from this weld, however, the strain gauge data from the skin-to-alignment key weld showed a maximum stress of 25 MPa (3,600 psi) after two passes. Using this, it should be safe to assume a maximum additional skin stress of 3,600 psi immediately adjacent to the lugs. This stress is included in the total combined stress referenced above.

The internal pressure that would correspond to the average shell pre-stress developed during welding and cooldown is given by Division 1 , UG-27 (1):

$$P = \frac{s_w E t}{R + 0.6t}$$

where: P = internal pressure

σ_w = 48,380 psi, the average stress in skin during welding & cooldown,

E = joint efficiency = 0.65

t = skin thickness = 0.269 inches

R = inside radius of shell = 7.874 inches

For this case, the internal pressure is 1,053 psi, i.e. an internal pressure of 1,053 psi would be required to increase the shell stress above the assembly and cooldown stress of 48,380 psi. The design pressure of 290 psi is well below this value.

2.6.2 Gravity load

There are two sources of gravity loads on the cold mass skin. The dead weight load acting on the cold mass at the support points produces bending stresses in the cold mass skin. These stresses are a maximum at the supports. The maximum bending stress is 2313 psi assuming a simply supported structure. These stresses are longitudinal and are therefore not additive to the circumferential stress that limits the internal pressure. There is also a bending moment at each of the support lugs. The Q2 cold mass weighs 23,000 lb. There are six lugs, each of which is 12 inches long. The maximum resulting

force on a weld is located at the center support. This force is 380 lb/inch of weld. This force produces a skin stress of 1,210 psi directly under the weld. There are no welds through the thickness of the material at any of these locations. This stress is included in the total combined stress referenced in 2.6.1.

2.7 Pressure testing

The cold mass assembly will be pressure tested in accordance with Section 5034 of the Fermilab ES&H Manual and UG-100 of the Code. The test pressure is 363 psi, which is 1.25 times the design pressure. The test will be performed after normal working hours and only personnel directly involved with the test will be present. The test medium will be gaseous nitrogen.

2.8 Summary

The LHC cold mass satisfies all the requirements of the ASME Code, however, it falls short of satisfying the requirements of the Fermilab ES&H Manual due to the 20% allowed stress derating. This is a result of the combined welding and cooldown stress in the skin as discussed in 2.6.1. There is a QA plan in place to ensure the quality of the cold mass skin weld as discussed in Section 2.1. It was shown that the MAWP for the cold mass assembly is 290 psi.

Chapter 3

LHC Interaction Region Quadrupole

Cryogenic piping

3.0 Introduction

The cryogenic pipes perform a variety of functions. They transport cryogens down the length of the cryostat during cooldown, warm-up, and in operation. There are nine distinct tube that comprise the cryogenic piping. Their descriptions and a summary of their operating parameters are shown in table 3.0.1. Figure 3.0.1 illustrates all the cryogenic lines in an LHC cryostat.

Table 3.0.1. Cryogenic piping parameters

Description	Fluid	OD (mm)	ID (mm)	P oper (bar)	P max (bar)	T (approx)	Flow (g/s)
Pumping line	Ghe	88.90	85.60	0.016	4.0	1.8 K	8.6
Heat exchanger outer shell	Lhe	168.28	162.74	1.3	20.0	1.9 K	0.0
Heat exchanger inner tube	Lhe	97.54	96.01	0.016	4.0	1.8 K	8.6
Cooldown line	Lhe	44.45	41.96	1.3	20.0	1.9 K	30.0
LHe supply	Lhe	15.88	13.39	0.016	4.0	1.8 K	8.6
4.5K supply and return	Lhe	19.05	15.75	1.3	20.0	4.5 K	1.1
50-70K shield supply	Ghe	38.10	31.75	19.5	22.0	60 K	5.0
50-70K shield return	GHe	38.10	31.75	19.0	22.0	65 K	5.0

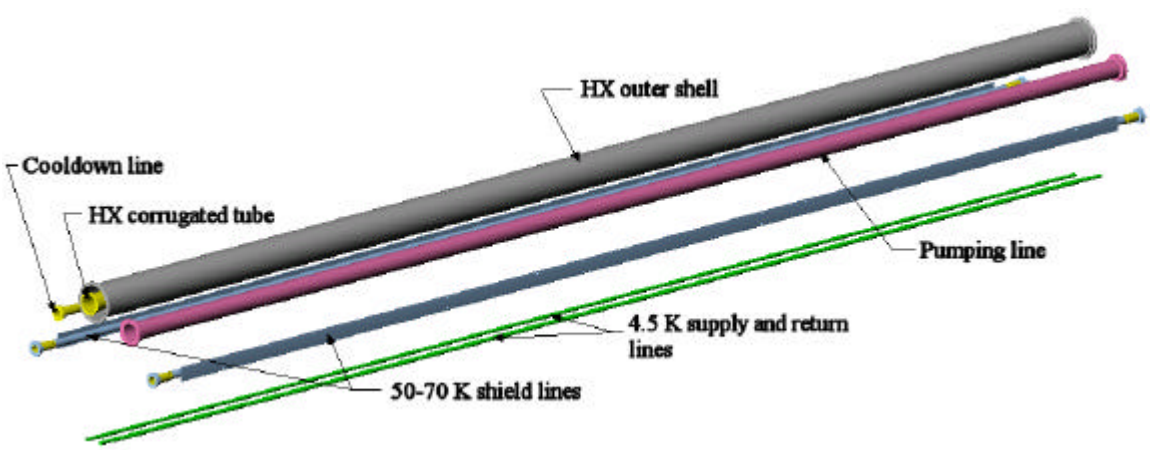

Figure 3.0.1 LHC cryostat cryogenic piping

3.1 Design codes and evaluation criteria

The LHC quadrupole cryostat piping was designed and built, but not inspected, per the requirements of ASME B31.3, "Chemical Plant and Petroleum Refinery Piping". All of the piping welds are made by Fermilab welders certified to the requirements of Section IX of the ASME code, visually inspected as described in B31.3 section 341.4.1(a), and passed a helium leak test per Fermilab engineering specification ES-107240.

3.2 Materials

The pumping line, heat exchanger outer shell, cooldown line, Lhe supply, and 4.5K supply and returns are fabricated from 304 stainless steel. The heat exchanger inner tube is an OFHC copper corrugation. The 50-70K shield supply and return are 6063-T5 aluminum extrusions.

3.3 Pressure loading and analysis

With the exception of the heat exchanger outer shell and inner tube, the minimum thickness is evaluated using the procedures in 304.1.2(a) of ASME B31.3. The minimum tube thickness for seamless or longitudinally welded piping for t<D/6 is given by:

$$t = \frac{PD}{2SE}$$

where: t = wall thickness

P = internal design pressure

D = outside diameter

S = allowable stress from table A-1

E = quality factor from table A-1A or A-1B

Table 3.3.1 summarizes the results of the wall thickness calculation for each of the applicable lines.

Table 3.3.1. Cryogenic piping parameters							
Description	**P (psi)**	**D (in)**	**S (psi)**	**E**	**t req'd (in)**	**P at MTF (psi) ****	**t actual (in)**
Pumping line	59	3.50	20,000	1.0	0.005	1	0.083
Heat exchanger outer shell	na (see below)					100	0.109
Heat exchanger inner tube	na (see below)					1	0.310
Cooldown line	294	1.75	20,000	1.0	0.013	100	0.065
LHe supply	59	0.63	20,000	1.0	0.001	1	0.065
4.5K supply and return	294	0.75	20,000	1.0	0.006	100	0.065
50-70K shield supply	323	1.50	7,300	1.0	0.033	100	0.125
50-70K shield return	323	1.50	7,300	1.0	0.033	100	0.125

**: Relief valve setting at MTF.

In all cases the actual wall thickness of the piping is greater than the minimum required by ASME B31.3. Also in all cases, the maximum pressures at MTF as established by the relief valve settings are less than the design pressures.

3.3.1 Heat exchanger outer shell

The outer shell of the external heat exchanger is a special case when considering the cryogenic piping because it is over 6 inches in diameter, i.e. the diameter above which the boiler and pressure vessel code applies, not the piping code. Application of the Code to determine the minimum required thickness for the outer shell yields the results shown in table 3.3.1.1.

Table 3.3.1.1 Outer shell as a pressure vessel (governing equations (UG-27(c))

$$t = \frac{PR}{SE - 0.6P}(circumferential stress) \; or \; t = \frac{PR}{2SE + 0.4P}(longitudinal stress)$$

Variable	Value	Units	Descriptions and References
P	300	psi	Internal design pressure
R	3.125	in	Shell inside radius
S	16000	psi	Subpart 1, Section II, Part D, Table 1A, derated to 80% of allowed
E	0.70		Weld joint efficiency (Table UW-12)
t(c)	0.085	in	Minimum shell thickness when sized for circumferential stress
t(l)	0.042	in	Minimum shell thickness when sized for longitudinal stress
t	0.085	in	Minimum shell thickness

For this case the minimum wall thickness required is 0.085 inch. The outer shell of the heat exchanger is 6 inch IPS, schedule 5 with an outside diameter of 6.625 inches and a wall thickness of 0.109 inch so the requirement is satisfied.

3.3.1.1 End flanges

The welds between the tube ends and the end flanges are category C lap welds as described in UW-3(a)(2) and UW-9(e) of the Code. UW-9(e) requires that the overlap be not less than four times the thickness of the inner plate. In the case of the heat exchanger outer shell, the tube thickness is 0.109 inch. The overlap at the end flanges is 0.6 inch so the requirement is met. The only load acting on this flange is an axial load from the maximum design pressure of 300 psi. The total axial force acting on the flange is 9,700 lb. At the end flange, this force is resisted by the weld between the outer shell and the end flange. As shown on Fermilab drawing 5520-ME-390002, this weld is specified to be a 3 mm (0.12 inch) fillet. The stress on the weld is given by

$$s_w = \frac{f_a}{(l)(t_w)}$$

where: σ_w = stress in the weld

f_a = axial force = 9,700 lb

l = linear length of weld = 20.8 inches

t_w = weld equivalent thickness = 3 mm/$\sqrt{2}$ = 2.12 mm = 0.084 inch

For this case, the weld stress, σ_w, is 5,550 psi which is well below that allowed by UW-18 of the Code given by:

$$(20{,}000 \text{ psi})(0.8)(0.55) = 8{,}800 \text{ psi}$$

3.3.1.2 Cold mass connection

The heat exhanger outer shell connects to the cold mass through a short vertical tube. The connection of this tube to the outer shell constitutes an opening in the vessel that potentially needs reinforcement. Section UG-37 of the Code requires that the minimum area of reinforcement for these openings is:

$$A_r = dt_rF + 2t_nt_rF(1 - f_{r1})$$

where: A_r = area required

d = inside diameter of opening = 3.75 inches

t_r = minimum required thickness of the shell at the design pressure computed using UG-27(c)(1) = 0.085 (see table 3.3.1.1)

F = correction factor = 1

t_n = nozzle wall thickness = 15.9 mm = 0.625 inches

f_{r1} = strength reduction factor = 1

For this case, $A_r = 0.319$ in^2. The area for reinforcement available in the shell is given by the larger of:

$$A_1 = d(E_1t - Ft_r) - 2t_n(E_1t - Ft_r)(1 - f_{r1})$$

or

$$A_1 = 2(t + t_n)(E_1t - Ft_r)-2t_n(E_1t - Ft_r)(1 - f_{r1})$$

where: E_1 = weld efficiency = 1

t = vessel wall thickness = 0.109 inches

For this case, $A_1 = 0.09$ in^2 from the two expressions above. The available area in the shell is less than the required area so the reinforcement in the nozzle must be evaluated.

The minimum thickness of the nozzle is given by UG-27 and is the larger of:

$$t_{rn} = \frac{PR_n}{SE - 0.6P}$$

or

$$t_{rn} = \frac{PR_n}{2SE + 0.4P}$$

where: R_n = inside radius of nozzle = 1.875 inches

For this case, t_{rn} = 0.049 inches is the larger value using the first of the two expressions above. The nozzle thickness is 0.625 inches, so this requirement is satisfied.

The reinforcement area available in the nozzle is given by the smaller of:

$$A_2 = 5(t_n - t_{rn})t$$

or

$$A_2 = 5(t_n - t_{rn})t_n$$

For this case, A_2 = 0.314 in^2 from the two expressions above. The total available area of reinforcement is given by:

$$A_{tot} = A_1 + A_2$$

For this case, A_{tot} = 0.404 in^2 which is larger than the required area of reinforcement, so this requirement is satisfied.

This opening is greater than half the ID of the shell so the requirements of Appendix 1-7 of the Code must also be evaluated. Section 1-7(a) states that two-thirds of the required reinforcement shall be within the following limits:

1) Parallel to vessel wall: the larger of three-fourths times the limit in UG-40(b)(1), or equal to the limit in UG-40(b)(2);
2) Normal to vessel wall: the smaller of the limit in UG-40(c)(1), or in UG-40(c)(2).

The requirements from these limits give an envelope of 5.626 inches by 0.273 inches. The nozzle is 5.0 inches by 0.109 inches. All of the available reinforcement is within these limits so this requirement is satisfied.

Section 1-7(b)(2) states that the membrane stress, S_m, shall not exceed the allowable stress, S, and also that the maximum combined membrane stress, S_m, and bending stress, S_b, shall not exceed 1.5S at design conditions. Case B of Fig. 1-7-1 gives the membrane stress:

$$S_m = P\left(\frac{R(R_n + t_n + \sqrt{R_m t}) + R_n(t + \sqrt{R_{nm} t_n})}{A_s}\right)$$

where: R_m = mean radius of shell = 3.258 inches

R_{nm} = mean radius of nozzle neck = 2.188 inches

For this case, S_m = 4,833 psi, which is less than the allowable stress, S = 16,000 psi. The bending stress is given by:

$$S_b = \frac{Ma}{I}$$

where: M = bending moment = 1,128 in-lbs.

a = distance between neutral axis and inside of vessel wall = 0.519 inches

I = moment of inertia about nuetral axis = 0.032 in^4

For this case, S_b = 18,290 psi. The combined stress, $S_m + S_b$, is equal to 23,123 psi which is lower than 1.5S = 1.5(16,000) = 24,000. This requirement is satisfied.

The cold mass connection tube is attached to the outer shell using a fillet weld. The only load acting on this joint is an axial load from the maximum design pressure of 290 psi. The total axial force acting on the flange is 2,500 lb. The maximum force which can be supported by these welds is given by:

$$F = s_w p d t_w E$$

where: F = maximum allowed force in the weld

σ_w = stress in the weld = (20,000 psi)(0.8) = 16,000 psi

d = effective diameter of the weld = 3.5 inches

t_w = weld equivalent thickness = 3 mm/√2 = 2.12 mm = 0.084 inch

E = weld efficiency = 49% (per UW-15)

For this case, F = 7,240 lb. which is less than the total force of 2,500 lb. so the weld is sufficient.

3.3.2 Heat exchanger inner tube

The inner tube of the external heat exchager is an OFHC copper corrugated tube. The dimensions are shown on Fermilab drawing 5520-MC-390011. Copper is required for thermal conductivity. The corrugations provide some reservoir for liquid and add to the structural strength of the tube. The pressure loading is shown in table 3.0.1. The most significant load is an external pressure at 20 bar or 300 psi.

The piping code doesn't explicitly address corrugated tubes. It addresses metal expansion joints, but this tube doesn't fall into that category. As a result, a finite element model of the tube was created and subjected to 60 psi internal and 300 psi external pressue loads. The results from these two analyses are shown in figures 3.3.2.1 and 3.3.2.2.

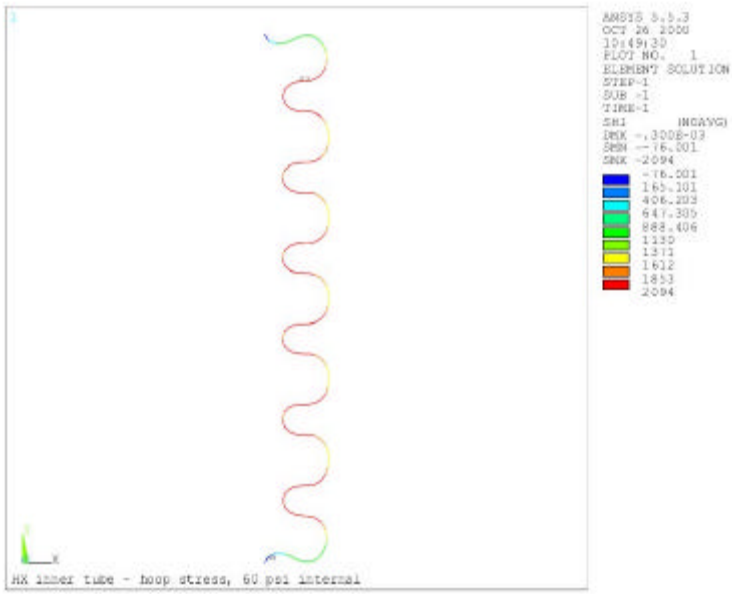

Figure 3.3.2.1 Heat exchanger inner tube hoop stress at 60 psi internal pressure

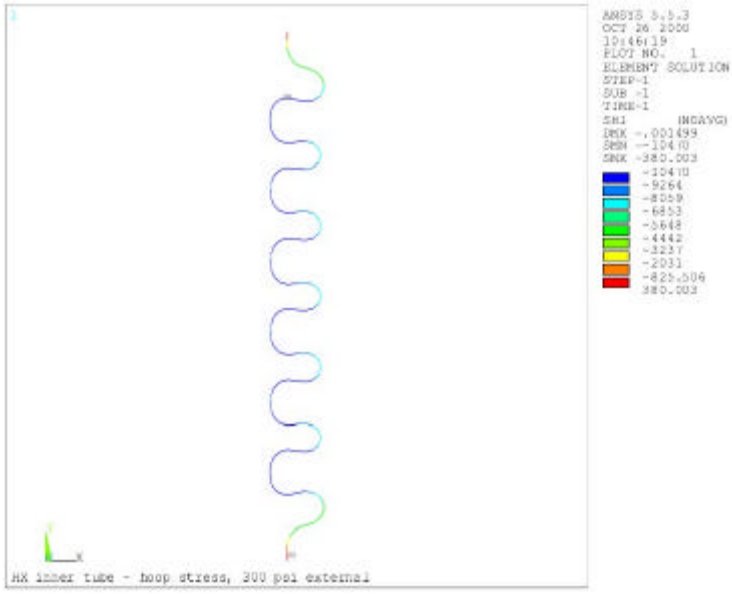

Figure 3.3.2.2 Heat exchanger inner tube hoop stress at 300 psi external pressure

In addition a sample of the inner tube was subjected to a hydrostatic test in a fixture made specifically for that purpose. The sample was tested to 500 psi external pressure with no visible distortion of the convolutions.

3.4 Summary

The LHC prototype cryostat cryogenic piping satisfies all requirements of the ASME Boiler and Pressure Vessel Code, ASME B31.3, and the Fermilab ES&H manual with the exception of the heat exchanger inner tube which is not explicitly addressed by the codes. However, in the case of this tube, analysis and test results indicate that the integrity of this tube is not compromised by any operating mode at MTF or under LHC operating conditions.

Chapter 4

LHC Interaction Region Quadrupole

Vacuum vessel

4.0 Introduction

The functions of the vacuum vessel are to contain the magnet's insulating vacuum and to provide the structural support of the magnet, shield, and internal piping to the accelerator tunnel floor. In operation, the vacuum vessel is pressurized externally with a differential pressure of one atmosphere. In the event of an internal piping failure the vessel may become pressurized internally. The maximum allowable working pressure is determined in this chapter for both internal and external pressure loading.

4.1 Design codes and evaluation criteria

The LHC quadrupole cryostat vacuum vessel must satisfy all the requirements of the "Vacuum Vessel Safety" section (section 5033) of the Fermilab ES&H Manual. This section states that adherence to the Code is not required, but the design rules may be applied. Because the vacuum vessel contains cryogen lines, the potential for pressurization does exist. If one of these lines were to fail, cryogens could expand to pressurize the vessel to the vacuum system relief valve pressure of 1 psi. Both the Code and the ES&H Manual say that a vessel with an internal pressure of 15 psi or less is not considered a pressure vessel. Therefore, for the purposes of testing at MTF, the vessel functions strictly as a vacuum vessel.

4.2 Materials

The production vacuum vessel shells are fabricated from spiral-welded L 485 MB carbon steel per DIN standard EN 10208-2. This material meets or exceeds the requirements in Fermilab specification 5520-ES-390105 for strength, low-temperature

toughness, weldability, and leak-tightness. Material certifications are included in Appendix C. This is a European-standard material and not referenced with Code-allowed materials. However, it is very similar to SA-516, grade 70 that was used for the LHC IRQ prototype vacuum vessel so we use properties for that material here. It was chosen for use at CERN due to its excellent low-temperature toughness properties. Table 4.2.1 summarizes the material composition and physical properties of the two materials. For SA-516, grade 70 the allowed stress is 20,000 psi and the allowable temperature range at this allowed stress is -20 to +500 °F (Section II, Part D, Subpart 1, Table 1A). Section 5031 of the Fermilab ES&H Manual requires derating of the allowable stress to 80% of the allowed value in cases where the vessel is either fabricated in-house or is not code-stamped. This reduces the allowed stress in pressure vessel calculations to 16,000 psi and corresponds to a safety factor of 5. Flanges and access ports are fabricated from 304 stainless steel.

Table 4.2.1: Summary comparison of SA-516 grade 70 and L 485 MB carbon steels

	C (% max)	Mn (% max)	P (% max)	S (% max)	Min yield (ksi)	Min tensile (ksi)	Elongation (% min)
SA-516	0.31	1.2	0.035	0.035	38	70	17
L 485 MB	0.16	1.7	0.025	0.02	70.4	82.7	18

4.3 Structural loading and analysis

The mechanical load on the vacuum vessel consists of the gravity load of the internal components and the vessel itself, the internal radial vacuum load, and the axial vacuum load. The weight of each LHC cold mass is different so for the structural load due to gravity we will consider the weight of the heaviest assembly per unit length, Q3. The Q3 cold mass and internal components weigh 23,500 lb (10,680 kg) and are supported at two places along the length of the vacuum vessel. The radial vacuum load is equivalent to one atmosphere external pressure. The axial load is equal to the cross sectional area of the vessel times one atmosphere pressure or 15,000 lb (6,820 kg). Figure 4.3.1 illustrates a typical LHC IRQ quadrupole cryostat vacuum vessel. Attachments to the accelerator tunnel floor and the internal cold assembly are coincident

and occur at the two reinforced sections. The end rings on either end of the vessel provide attachment points for vacuum bellows at one end and the turnaround can at MTF at the other. The four lugs shown at each end ring provide means for securing the vessel to the feedbox and turnaround can.

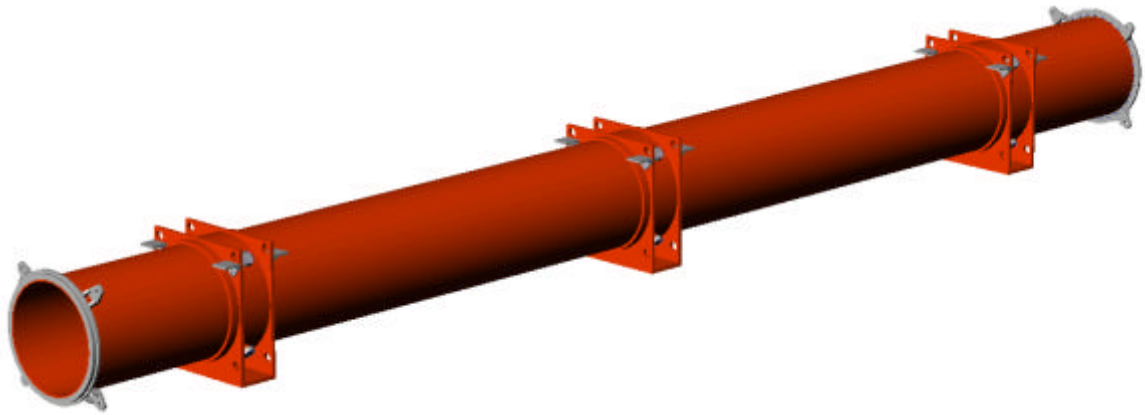

Figure 4.3.1 Typical LHC IRQ cryostat vacuum vessel

The stresses due to the gravity and vacuum loads were determined using a finite element model of the entire assembly. Figure 4.3.2 illustrates the finite element mesh. Gravity acts on the entire assembly. The vacuum loads are applied as a pressure of 15 psi acting inward on the outer vessel wall and as discreet forces acting along the length of the vessel and applied at the end ring.

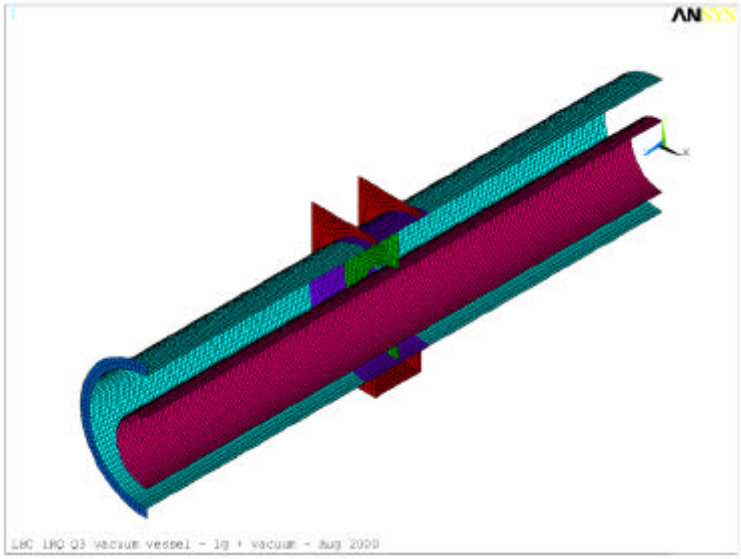

Figure 4.3.2 Finite element mesh from structural and vacuum load analysis

The stresses in the vacuum vessel wall resulting from these combined loads are shown in figure 4.3.3. The stress component displayed is the von Mises equivalent stress that is a combination of principal and shear stress components. It is commonly used to indicate the state of stress in structures that might be indicative of material yielding or failure. The maximum stress in the vessel shell from all the combined loads is 2335 psi and is a bending stress that occurs at the end of the vessel where the end ring attaches. This stress is below the allowed stress in the vacuum vessel material of 16,000 psi.

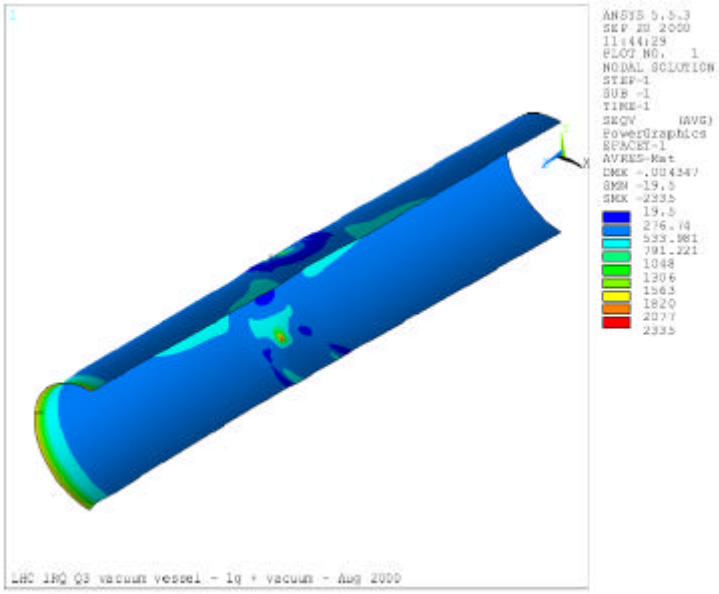

Figure 4.3.3 von Mises stress plot of the vacuum vessel shell only

4.4 Pressure loading and analysis

The vacuum vessel is fabricated in sections to allow adjustment of the individual pieces in an attempt to make as straight a vessel as possible. The individual tube sections are rolled and welded using full-penetration as shown in Fermilab drawing 5520-MD-390131. This drawing is typical of all vacuum vessel tube sections. The spiral-wound longitudinal seam weld is a double butt joint as described in UW-3(a)(1) and shown in table UW-12(1) of the Code. The weld joint efficiency, E, is 0.7 for the case where no radiographic examination is made. Tables 4.4.1 through 4.4.3 below summarize the Code

calculations for the vacuum vessel as an externally pressurized vessel with 1 atmosphere external pressure and as a pressure vessel with 2 atmospheres internal pressure. The interconnecting sleeves and mounting frames are treated as stiffeners. The vacuum vessel has a pressure relief located on the MTF feedbox which opens just above atmospheric pressure. For the sake of the vacuum vessel acting as a pressure vessel however (table 4.4.3) the design pressure is defined to be 2 atmospheres.

Table 4.4.1 Shell as a vacuum vessel (governing equations (UG-28(c))

$$P_a = \frac{4B}{3(D_o/t)}(method1)\ or\ P_a = \frac{2AE}{3(D_o/t)}(method2)$$

Variable	Value	Units	Descriptions and References
Do	36.00	in	Vacuum vessel OD
L(total)	488.00	in	Total shell length
n	3		Number of stiffening rings
L	178.00		Distance between stiffeners
t	0.500	in	Vacuum vessel thickness
E	3.00E+07	psi	Young's modulus
L/Do	4.94		
Do/t	72		
A	0.0004		Subpart 3, Section II, Part D, Figure G.
B	5800		Subpart 3, Section II, Part D, Figure CS-1.
Pa (method 1)	107.41	psi	Calculated maximum allowable external working pressure
Pa (method 2)	111.11	psi	Calculated maximum allowable external working pressure

Table 4.4.2 Stiffening rings (governing equations (UG-29(a))

$$I_s = \frac{D_o^2 L_s (t + A_s/L_s) A}{14}\ and\ B = \frac{3}{4}\left(\frac{PD_o}{t + A_s/L_s}\right)$$

Variable	Value	Units	Descriptions and References
P	15	psi	External design pressure (1 atm per FESHM 5033)
Do	36.00	in	Vacuum vessel OD
Ls	178.00	in	Distance between stiffeners
t	0.500	in	Vacuum vessel thickness
As	29.528	in2	Assumed cross sectional area (38" OD, 1-1/2" wall, 19.685" long)
B	608		UG-29, Step 1
A	4.05E-05		2 * B / E per UG-29 Step 5
Is	0.445	in4	Required stiffener I

Table 4.4.3 Shell as a pressure vessel (governing equations (UG-27(c))

$$t = \frac{PR}{SE - 0.6P}(circumferential stress) \; or \; t = \frac{PR}{2SE + 0.4P}(longitudinal stress)$$

Variable	Value	Units	Descriptions and References
P	15	psi	Internal design pressure
R	17.500	in	Shell inside radius
S	16000	psi	Subpart 1, Section II, Part D, Table 1A, derated to 80% of allowed
E	0.70		Weld joint efficiency (Table UW-12)
t(c)	0.023	in	Minimum shell thickness when sized for circumferential stress
t(l)	0.012	in	Minimum shell thickness when sized for longitudinal stress
t	0.023	in	Minimum shell thickness

From table 4.4.1, the maximum allowable external working pressure of the vacuum vessel, Pa, is 107 psi. The minimum pressure required by the Fermilab ES&H manual, chapter 5033 is 1 atmosphere or 15 psi so the requirement is met. From table 4.4.2, the required section modulus of stiffeners is 0.445 in^4. The section modulus of the connecting rings is 5.5 in^4 so the requirement is met. Finally, from table 4.4.3, the minimum shell thickness for the vacuum vessel is 0.023 inch. The vessel wall is actually 0.5 inch so the requirement is met.

4.4.1 Connecting rings

The welds between the individual tube sections and the interconnecting sleeves are category C lap welds as described in UW-3(a)(2) and UW-9(e) of the Code. UW-9(e) requires that the overlap be not less than four times the thickness of the inner plate. In the case of the LHC vacuum vessels, the inner tube thickness is 1/2 inch. The overlap is 2 inches so the requirement is met. From the finite element analysis, the maximum stress in the tube section at the interconnecting sleeve is approximately 775 psi. Since the weld is not explicitly included in the finite element model it is necessary to scale the stress at the weld area by the ratio of the minimum thickness of the weld and the tube thickess. This gives:

$$s_w = s_t \frac{t_t}{t_w}$$

where: σ_w = stress in the weld

σ_t = stress in the tube = 775 psi (from finite element analysis)

t_t = tube thickness = 0.5 inch

t_w = weld equivalent thickness = 6 mm/√2 = 4.24 mm = 0.17 inch

For this case, the weld stress, σ_w, is 2,280 psi which is well below that allowed by UW-18 of the Code given by:

$$(20{,}000 \text{ psi})(0.8)(0.55) = 8{,}800\text{psi}$$

4.4.2 End flanges

The welds between the tube ends and the end flanges are category C laps weld as described in UW-3(a)(2) and UW-9(e) of the Code. UW-9(e) requires that the overlap be not less than four times the thickness of the inner plate. In the case of the LHC vacuum vessels, the inner tube thickness is 1/2 inch. The overlap at the end flanges is only 1 inch so the requirement is not met. The only load acting on this flange is an axial load from the internal vacuum. The total axial force acting on the flange is 15,000 lb. At the end flange, this force is resisted by the weld between the vacuum vessel tube and the end flange. As shown on Fermilab drawing 5520-ME-390129, this weld is specified to be a 6 mm (0.24 inch) fillet. The stress on the weld is given by

$$s_w = \frac{f_a}{(l)(t_w)}$$

where: σ_w = stress in the weld

f_a = axial force = 15,000 lb

l = linear length of weld = 113 inches

t_w = weld equivalent thickness = 6 mm/√2 = 4.24 mm = 0.17 inch

For this case, the weld stress, σ_w, is 780 psi which is well below that allowed by UW-18 of the Code given by:

$$(20{,}000 \text{ psi})(0.8)(0.55) = 8{,}800 \text{ psi}$$

4.4.3 Access ports

The access ports in the connecting rings are openings in the vessel. Section UG-37 of the Code requires that the minimum area of reinforcement for these openings is:

$$A_r = dt_rF + 2t_nt_rF(1 - f_{r1})$$

where: A_r = area required

d = inside diameter of opening = 3 inches

t_r = minimum required thickness of the shell at the design pressure computed using UG-27(c)(1) = 0.048 (see table 4.4.3)

F = correction factor = 1

t_n = nozzle wall thickness = 12 mm = 0.47 inches

f_{r1} = strength reduction factor = 1

For this case, $A_r = 0.14 \text{ in}^2$. The area for reinforcement available in the shell is given by the larger of:

$$A_1 = d(E_1t - Ft_r) - 2t_n(E_1t - Ft_r)(1 - f_{r1})$$

or

$$A_1 = 2(t + t_n)(E_1t - Ft_r)-2t_n(E_1t - Ft_r)(1 - f_{r1})$$

where: E_1 = weld efficiency = 1

t = vessel wall thickness = 1.5 inches

For this case, $A_1 = 5.72\ in^2$ from the two expressions above. Since the available area, A_1 is greater than the required are A_r, no additional reinforcement is necessary.

The access ports are attached to the vacuum vessel using fillet welds. These welds support the structural weight of the internal magnet assembly and all other internal components. The weld supports this weight in shear. The maximum force which can be supported by these welds is given by:

$$F = s_w p d t_w E$$

where: F = maximum allowed force in the weld

σ_w = stress in the weld = (20,000 psi)(0.8) = 16,000 psi

d = effective diameter of the weld = 3 inches

t_w = weld equivalent thickness = 5 mm/√2 = 3.54 mm = 0.14 inch

E = weld efficiency = 49% (per UW-15)

For this case, F = 10,344 lb. The largest load in any LHC cold mass is 23,500 lb shared by 8 of these welds. In that case each weld supports 2,938 lb so the weld is sufficient.

4.5 Summary

The LHC prototype vacuum vessel satisfies all requirements of the ASME Code and the Fermilab ES&H manual with the exception of the joint between the end rings and the vessel shell. The code requires this lap joint to have minimum overlap of four times the vessel thickness or 2 inches. The design overlap is 1 inch. As shown in 4.4.2 stress in the weld between the end ring and vessel shell is less than 10% of the allowable stress. Since section 5033 of the Fermilab ES&H manual does not require strict adherence to the Code and analysis confirms stresses lower than allowed for the material, exceptional vessel status is not required for the vacuum vessel.

Chapter 5

LHC Interaction Region Quadrupole

Interconnect

5.0 Introduction

The interconnect is the region between the magnet and the feedbox when installed at MTF. The purpose is to transport cryogens, electrical wiring and insulating vacuum from the feedbox to the magnet. There are thirteen total bellows which make up the interconnect consisting of seven unique designs. Their descriptions and a summary of their operating parameters are shown in table 5.0.1.

Table 5.0.1. Bellows operating parameters

Parameter	HX Outer Shell	Cooldown Line	50-70 K Shield	Pumping Line	Cold Mass	MTF Beam Tube	Vacuum Vessel
Internal Media	Lhe	Lhe	Ghe	Lhe	Lhe	Vacuum	Vacuum
External Media	Vacuum	Vacuum	Vacuum	Vacuum	Vacuum	Vacuum	Air
Operating pressure	1.3 bar	1.3 bar	19.5 bar	1.3 bar	1.3 bar	Vacuum	Vacuum
Internal Design Pressure	20.0 bar	20.0 bar	22.0 bar	20.0 bar	20.0 bar	Vac.-1 bar	Vac.-2 bar
External Design Pressure	1 bar	1 bar	1 bar	1 bar	1 bar	Vac.-1 bar	1 bar
Temperature Range	1.9 - 300 K	1.9 - 300 K	50 - 300 K	1.9 - 300 K	1.9 - 300 K	1.9 - 300 K	300 K
Minimum Cycle Life	5000 cycles	500 cycles	500 cycles	5000 cycles	1000 cycles	5000 Cycles	5000 cycles

5.1 Design codes and evaluation criteria

The LHC quadrupole bellows are designed according to the standards of the Expansion Joint Manufactures Association, Inc. (EJMA). All applicable requirements of the Fermilab ES&H manual as well as the ASME Code must also be satisfied.

5.2 Materials

The convolutions on all of the bellows are 316L stainless steel. All other components that make up a bellows assembly are either 304 or 316 series stainless steel.

5.3 Bellows design

The bellows fall into two categories: formed convolutions and welded convolutions. There are six formed and one welded bellows design. Five of the six formed bellows designs are similar and are discussed in section 5.3.1. The other formed bellows, the vacuum vessel bellows, has two sets of convolutions and is discussed in section 5.3.2. The cold mass bellows is the only welded bellows and is discussed in section 5.3.3. All bellows, with the exception of the vacuum vessel bellows, will be fitted with squirm protectors any time there is pressure applied to the bellows and when installed at MTF. In addition, the heat exchanger outer shell, cooldown line, pumping line and 50-70 K shield bellows have integral liners to guard against failure due to elastic instability.

5.3.1 Interconnect bellows

The interconnect bellows are all similar in design, they have one set of convolutions. A typical design is shown in Figure 5.3.1.

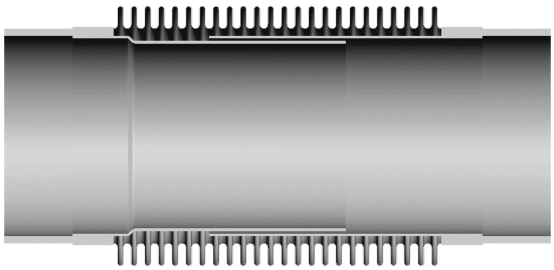

Figure 5.3.1. Typical hydroformed bellows design (cross section).

The convolutions were designed according to EJMA Section C-5.2.2. A computer program was used for the calculations. The input parameters and the results are summarized in Table 5.3.1.1.

Table 5.3.1.1. Interconnect bellows input parameters and results.

	HX Outer Shell	Cooldown Line	50-70 K Shield	Pumping Line	MTF Beam Tube
Input					
Bellows ID, in.	7.00	2.25	2.25	4.00	3.00
Number of plys	3	3	3	2	1
Ply thickness, in.	0.014	0.012	0.012	.010	0.008
No. of convolutions	36	8	8	16	18
Convolution pitch, in.	0.222	0.375	.375	0.250	0.250
Convolution depth, in.	0.275	.375	0.375	.375	0.250
Design Pressure, psi	300	325	325	60	15
Travel, in	1.25	1.25	1.25	1.25	0.875
Elastic Modulus, psi	2.83E+07	2.83E+07	2.83E+07	2.83E+07	2.83E+07
Results					
Calc. stress, S1, psi	14,609	5,556	5,556	2,394	588
Calc. stress, S2, psi	10,227	7,333	7,333	2,578	1,490
Calc. stress, S3, psi	1,004	1,841	1,841	590	244
Calc. stress, S4, psi	14,577	34,554	34,554	17,110	4,931
Fatigue cycles	5,298	587	587	9,989	18,144
Axial spring rate, lb/in.	2,232	977	977	301	165
Squirm pressure, psi	304	348	348	80	39

EJMA requires that S1 and S2 be less than the allowable material stress and that (S3+S4) be less than 3 times the allowable material stress. The allowable material stress in this case is 20,000 psi. This requirement is satisfied.

5.3.2 Vacuum vessel bellows

The vacuum vessel bellows consists of two sets of convolutions with a straight section in-between. The convolutions were designed according to EJMA Section C-

5.2.2. A computer program was used for the calculations. The input parameters and the results are shown in Table 5.3.2.1.

Table 5.3.2.1. Vacuum Vessel bellows input parameters and results.	
	Vacuum Vessel Bellows
Input	
Bellows ID, in.	40.25
Number of plys	1
Ply thickness, in.	0.018
No. of convolutions	8
Convolution pitch, in.	0.500
Convolution depth, in.	1.000
Design Pressure, psi	30
Travel, in	0.7
Elastic Modulus, psi	2.83E+07
Results	
Calc. stress, S2, psi	7619.6
Calc. stress, S3, psi	843.6
Calc. stress, S4, psi	39638.0
Fatigue cycles	1421083.0
Axial spring rate, lb/in.	1006.1
Squirm pressure, psi	237.0

All of the EJMA requirements are satisfied.

The straight section between convolutions is fabricated from 304 stainless steel and is considered a tube or shell under external pressure. Tables 5.3.2.2 and 5.3.2.3 below summarize the Code calculations for the straight section as an externally pressurized vessel with 1 atmosphere external pressure and as a pressure vessel with 2 atmospheres internal pressure. The MTF feedbox, to which this bellows is attached, has a pressure relief that opens just above atmospheric pressure. For the sake of the straight section acting as a pressure vessel however (table 5.3.2.3) the design pressure is defined to be 2 atmospheres.

Table 5.3.2.2 Shell as a vacuum vessel (governing equations (UG-28(c))

$$P_a = \frac{4B}{3(D_o/t)}(method1)\ or\ P_a = \frac{2AE}{3(D_o/t)}(method2)$$

Variable	Value	Units	Descriptions and References
Do	40.25	in	Vacuum vessel bellows OD
L	16.00	in	Length of shell
t	0.125	in	Vacuum vessel bellows straight section thickness
E	2.83E+07	psi	Young's modulus
L/Do	0.4		
Do/t	322		
A	0.0006		Figure 5-UGO-28.0, Appendix 5
B	7250		Figure 5-UHA-28.1, Appendix 5
Pa (method 1)	30.02	psi	Calculated maximum allowable external working
Pa (method 2)	35.16	psi	Calculated maximum allowable external working

Table 5.3.2.3 Shell as a pressure vessel (governing equations (UG-27(c))

$$t = \frac{PR}{SE - 0.6P}(circumferentialstress)\ or\ t = \frac{PR}{2SE + 0.4P}(longitudinalstress)$$

Variable	Value	Units	Descriptions and References
P	30	psi	Internal design pressure
R	20.00	in	Shell inside radius
S	15,040	psi	Section VIII, Division 1, Table UHA-23, derated to 80% of allowed
E	0.60		Weld joint efficiency (Table UW-12)
t(c)	0.067	in	Minimum shell thickness when sized for circumferential stress
t(l)	0.033	in	Minimum shell thickness when sized for longitudinal stress
t	0.067	in	Minimum shell thickness

From table 5.3.2.2, the maximum allowable external working pressure of the vacuum vessel, Pa, is 30.02 psi. The minimum pressure required by the Fermilab ES&H manual, chapter 5033 is 2 atmospheres or 30 psi so the requirement is met. From table 5.3.2.3, the minimum shell thickness for the vacuum vessel bellows straight section is 0.067 inch. The straight section wall is 0.125 inch so the requirement is met.

5.3.3 Cold mass bellows

The cold mass bellows is a welded bellows. Since EJMA only covers convoluted bellows, this bellows is vendor designed per our specifications. These specifications are the operating parameters listed in Table 5.0.1. There is a bellows protector that fits on the

OD of the convolutions to protect the bellows from squirm. The bellows protector must be installed prior to any pressurization of the bellows. This can be seen in Figure 5.3.3.1.

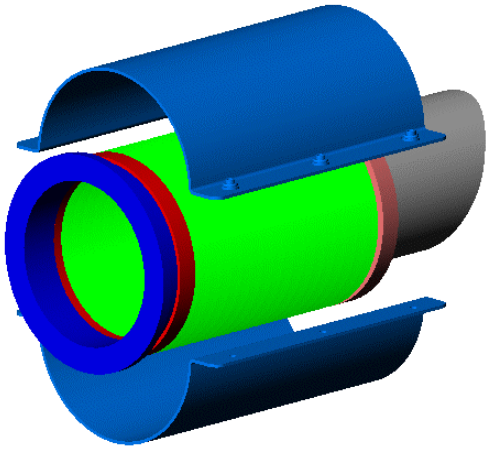

Figure 5.3.3.1. Cold mass bellows protector (exploded view).

5.4 Summary

All of the bellows to be used in the interconnect at MTF for the LHC quadrupoles meet the requirements of EJMA as well as all applicable ASME Codes and the Fermilab ES&H manual.

Appendix A

LHC Interaction Region Quadrupole

Cold mass weld coupon tests

Weld Inspections on FNAL Q2a and Q2b Quadrupoles

Agreement with CERN Safety Requirements

The schedule of tests for qualification and for production of Fermilab Q2a and Q2b quadrupoles is consistent with the agreements reached between CERN, Fermilab, and the US LHC Accelerator Project Office on 19 April 2000 (meeting report dated 28 April 2000 issued by M. Bona,).

Three sets of tests are discussed below:

- **Table 1** lists the tests that support the qualification of weld materials and weld process. These tests were proposed by Fermilab in March and finalized in the meeting on 19 April 2000.
- **Table 2** lists the tests according to ASME Section IX for qualification and re-qualification of welders (both equipment and personnel). Welders that are inactive for a period of six months must be re-qualified through the tests listed in Table 2.
- **Table 3** lists the tests to be performed on each series production magnet. These tests support the requirements of ASME Section VIII and Fermilab rules for the operation of pressure vessels.

Qualification of the Weld Materials and Process

The qualification of the weld materials and weld process for the Fermilab Q2a and Q2b magnets takes an approach analogous to that used by Brookhaven National Laboratory (BNL) for the RHIC magnets and accepted by CERN for the BNL beam separation dipoles. Fermilab provided documents to CERN in March 2000 describing the design and analyzing the operational limits of the weld. These documents were accepted by CERN as stated in the report of the 19 April 2000 meeting between CERN and Fermilab.

Qualification testing will be performed on a mechanical model. The weld geometry and weld process are identical to that of prototype and production magnets. Coupons will be taken from the mechanical model and weld sample tests as described in the Table 1 will be conducted to support qualification of the weld materials and process.

In addition to the tests performed on the mechanical model, one of the prototypes will have strain gauges applied. The gauges will be applied before welding of the cold mass skin to verify the level of stress obtained after welding. Since the vertical gap between the two iron halves remains closed, the evolution of stresses during cool-down does not need to be monitored.

Table 1 Weld Qualification Tests: The tests are conducted according to standards used by FNAL. Test standards used by CERN, which are comparable but not

necessarily identical, are listed for reference. Weld samples are taken from the mechanical model. All tests are conducted at room temperature unless otherwise noted.

Qualification Tests	CERN Standard **(for reference only)**	FNAL Standard	

Tests on Mechanical Model

Visual inspection	EN 970 (test) ISO 5817 (acpt)	FNAL ES-369730	1
Delta ferrite test		AWS A 4.2 (test)	2

Tests on Weld Samples

Visual examination (*macro-examination)*		ASME Sec. IX, QW-302.4 (test) ASME Sec. IX, QW-194 (acpt)	3
Transverse tensile test *300 K, 77 K, and 4.2 K*	EN 895 (test) EN10002-1 (acpt)	ASTM E 8M (test) ASME Sec IX, QW-153 (acpt)	4
Impact test *300 K, 77 K, and 4.2 K* *3 required in heat affected zone* *3 required in welded metal*	EN 875 (test) ISO 148 (test) EN 10045-1 (test)	ASTM E 23-96 (test) ASME Sec. VIII, UG-84 (acpt)	5
Fracture toughness test *300 K, 77 K, and 4.2 K*		ASTM E 1737-96 (test)	6
Radiographic (x-ray) test		ASME Sec. IX, QW-302.2 (test)	7

Notes on tests listed in Table 1 – Weld Qualification Tests

1. Visual inspection: Each pass of each weld will be visually inspected along its full length. Fermilab will specify the acceptance in a written engineering specification.

2. Delta ferrite test: This test was proposed by Fermilab to support qualification. AWS A 4.2 is a standard of the American Welding Society. Delta ferrite measurements are taken of the weld at discrete points along the magnet. Fermilab will establish a written standard for the spacing between discrete points and the maximum acceptable ferrite number for the GTAW process.

3. Visual examination: This test was proposed by Fermilab and required by ASME Sec. IX to check the depth of weld penetration.

4. Tensile test: This test was proposed by Fermilab to support qualification. Uniaxial tensile testing on welds at 300 K, 77 K, and 4 K will be conducted to determine the yield strength and ultimate tensile strength of the weldments. According to ASME Section IX (QW-153) the weld specimens must have an ultimate strength not less than the minimum specified strength of the base material. For 304 stainless steel, Table UHA gives a minimum required tensile strength of 550 MPa.

5. Impact test: This additional test was included by agreement between CERN and Fermilab. Charpy V-notch specimens will be impact tested at 300 K, 77 K, and 4.2 K. Three specimens from the weld and three from the heat affected zone will be tested at each temperature. According to UG-84, welded specimens must have a Charpy impact energy not less than the minimum specified impact energy of the base material. For a minimum tensile strength of 550 MPa, the required average impact energy of three samples is 27 J/cm^2 with a minimum impact energy of any one of the specimens of 20 J/cm^2.

6. Fracture toughness test: This test was proposed by Fermilab to support qualification at cryogenic temperatures. Notched specimens will be tested at 300 K, 77 K, and 4.2 K to characterize the toughness of the weld material. From the fracture mechanics analysis submitted to TIS (TD-00-025), we require a weld material with fracture toughness greater than 85 MPa √m.

7. Radiographic test: This test was added by Fermilab to further support qualification. The weld samples that will be taken from the mechanical model will be inspected radiographically. ASME Section IX will be used as a guide for the test and inspection of the samples. The radiographic inspector will be asked to identify rounded indications and linear indications (cracks, incomplete fusion, elongated inclusions). The inspector will be asked to estimate their sizes.

Welder Qualification and Re-qualification

Qualification and re-qualification of the welding equipment and personnel will be according to the requirements of ASME Section IX. Re-qualification is most often required due to a period of inactivity of six months or more, usually resulting from an interruption in production. Coupons will be taken from run-offs made during welder qualification (or re-qualification). Tests as described in the Table 2 will be conducted to support welder qualification or re-qualification.

Table 2 Welder qualification and re-qualification tests. The tests are conducted according to standards used by FNAL. Test standards used by CERN, which are comparable but not necessarily identical, are listed for reference. All tests are done at room temperature.

Welder Qualification Tests	CERN Standard **(for reference only)**	FNAL Standard	N c t e

Tests on Weld Samples

Visual examination		ASME Sec. IX, QW - 302.4 (test) ASME Sec. IX, QW-194 (acpt)	1
Bend test	EN 910 (test) ISO 7438 (test)	ASME Sec IX QW-462.3 (b) (test) ASME Sec IX QW-163 (acpt)	2

Notes on tests listed in Table 2 – Welder Qualification Tests

1. Visual examination: This test is proposed by Fermilab and required by ASME Sec. IX to check the depth of weld penetration.

2. Bend test: This test is required by ASME Section IX to determine the degree of soundness and ductility of weld joints. ASME requires the bend specimens have no open defects in the weld or heat affected zone exceeding 1/8 in (3.2 mm), measured in any direction on the convex surface of the specimen after bending.

Production Testing

No destructive tests are required for the Q2a and Q2b magnets. The production welds will be tested as indicated in Table 3.

The four run-offs from each production magnet will be saved and archived. Each run-off will be approximately 150 mm in length along the weld and labeled with the magnet number and location. The run-offs will become included with the engineering file supplied with each magnet.

Table 3 Production tests on series Q2a and Q2b quadrupoles. The tests are conducted according to standards and procedures used by FNAL. Test standards used by CERN, which are comparable but not necessarily identical, are listed for reference. All tests are conducted at room temperature unless otherwise noted.

Production Tests	CERN Standard **(for reference only)**	FNAL Standard	

Tests on Delivered Units

Visual inspection	EN 970 (test) ISO 5817 (acpt)	Fermilab ES-369730	1
Delta Ferrite Tests		AWS A 4.2 (test)	2
Leak check		Fermilab ES-107240	3
Pressure test		Fermilab ES&H 5034 ASME Sec. VIII , UG-100	4

Notes on tests listed in Table 3 – Production Tests

1. Visual inspection: Each pass of each weld will be inspected along its full length.

2. Delta ferrite test: This test was proposed by Fermilab to support qualification and will be conducted on each production unit. AWS A 4.2 is a standard of the American Welding Society. Delta ferrite measurements will be taken of the weld at discrete points along the magnet. Fermilab will establish a written standard for the spacing between discrete points and the maximum acceptable ferrite number for the GTAW process.

3. Leak check: This test is required by Fermilab.

4. Pressure test: This test is required by ASME Section VIII Division 1. On 1 July 1999 ASME reduced the pneumatic pressure test requirement from 1.25 to 1.1 times design pressure. Fermilab will continue to pneumatically test each production cold mass to 1.25 design pressure to remain consistent with current FNAL and CERN requirements.

MATERIALS RESEARCH & ENGINEERING, INC.
4820 N. 63rd Street, Suite 102
Boulder, Colorado 80301
(303) 530-9090, (303) 530-9092 FAX
http://www.henge.com/~mre
E-mail: mre@henge.com

TENSION TESTS, CHARPY IMPACT, AND FRACTURE TOUGHNESS EVALUATION OF 308L AND 316L WELD SAMPLES AT ROOM TEMPERATURE, 77K, AND 4.2K
(PO: 532752)

FINAL REPORT

Prepared for

Deepak R. Chichili, Ph.D.

FERMI National Accelerator Laboratory
Technical Division
M/S 316, P.O. Box 500
Batavia, IL 60510
Phone: (630) 840-4710
Fax: (630) 840-8036

December 18, 2000

Prepared by: _____
John M. Arvidson, Chief

_____
Michael Goyack, Engineer

_____

TENSION TESTS AND CHARPY IMPACT TESTS OF WELD SAMPLES AT ROOM TEMPERATURE, 77K, AND 4.5K
(PO: 524368)

Kenneth Blount, Lead Engineer

GENERAL INFORMATION:

Tension, fracture toughness, and Charpy impact specimens were machined from 308L and 316L weld sections provided by FERMI National Laboratory. Initial inspection of the weld of the 308L panel, shown in Figure 1, confirmed that the weld penetration was satisfactory for machining the requested test specimens. Inspection of the 316L material revealed similar satisfactory weld penetration. Periodic examinations during the machining process confirmed the weld penetration depth throughout the panel.

Figure 1. Weld Penetration at the 0-Inch Location of the 308L Panel.

Figures 2 and 3 present the specimen locations for the 308L and 316L panels, respectively. For the 308L panel, two specimens, COW Charpy #9 and HAZ Charpy #6, were machined from areas to either side of the section that tension specimens 1 through 5 were taken from. The approximate locations of the FERMI marked sections of A, B, C, and D are indicated. Three HAZ fracture toughness specimens could not be machined due to the narrow area indicated by the red circle in Figure 1.

Tension tests were carried out on a 20-kip electro-mechanical Instron test frame. Load and displacement data were recorded by both computer and plotter during each test. The speed of testing was 0.05 in/min. During the cryogenic tests, the temperature was controlled with an accuracy of ±2°F using liquid nitrogen (77K) and liquid helium (4K) as the cryogenic media. A calibrated type-E thermocouple was used to verify the temperature control. The tension specimen geometry is shown in Figure 4.

Charpy impact tests were performed on a Tinius Olsen impact test machine. Due to the geometry constraints of the weld section, a 0.194-inch thick impact specimen was employed. The Charpy impact specimen geometry is shown in Figure 5.

Fracture toughness tests were conducted on weld and heat affected zone specimens. The specimen geometry, prescribed by ASTM E1820, is shown in Figure 6. Due to the material constraints, a sub-sized compact tension specimen was machined (W=0.6976-inches). ASTM recommends testing a specimen with a *W* of 2.0-inches. Cryogenic tests were carried out in a cryostat with displacements being measured with cryogenic extensometers. The temperature was controlled with an accuracy of ±2°F, using liquid nitrogen (77K) and liquid helium (4K) as the cryogenic media. A calibrated, type-E thermocouple was used to verify the actual temperature and to maintain the temperature control. Strain extensometers, attached to the specimen at the load line, were used to measure the crack opening displacement (COD). Fracture toughness tests were performed on a 22-Kip, computer controlled, hydraulic Instron test frame. Specimen

precracking was performed in accordance with ASTM E1820. Specimens were side-grooved prior to performing the J-test.

The tension specimens for the 308L and 316L weld material are shown in Figures 7 and 8, respectively. Figure 9 shows all Charpy impact specimens, and Figure 10 shows a representative close-up of one Charpy specimen. Figure 11 shows representative fracture toughness specimens for both the 308L and 316L weld and HAZ sections.

RESULTS

Tension test results for the 308L weld sections are presented in Table 4, and data for the 316L weld section is in Table 5. The load versus displacement data for the 308L tension tests appears in Figures 12 through 20. Similar curves for the 316L tension tests appear in Figures 21 through 23. The double curves seen in Figures 21 and 22 were the result of the specimens being retested due to load pin failure. Ultimate tensile strength values were calculated from the minimum cross-sectional area measured before testing. Specimen T3085 failed in the center key section, but the failure stress for the specimen is based on the minimum area, which was not the center key section.

Ultimate tensile strength values for the 308L specimens did not display a large degree of variability at any of the three test temperatures. The average UTS value at room temperature was 100.6-ksi. For the 77K tension tests, the average UTS value was 147.3-ksi, and 150.7-ksi for the 4K tension tests.

The 316L material exhibited a higher amount of variability in the tension test results than was seen in the 308L material. The average UTS value for the material was 154.1-ksi at 4K. The tension specimen geometry was chosen for conducting the tests within the geometric constraints of the weld section. A larger grip section is required to accommodate a larger pin diameter, which would eliminate the premature failure of the load pin that occurred during the 316L tests.

Charpy impact data appears in Tables 3 through 5 for the 308L weld material, the 308L heat affected zone material, and the 316L weld material, respectively. Neither the 308L weld or HAZ material nor the 316 weld material exhibited a large degree of variability in the impact data within individual test temperatures.

Post failure inspection of the fracture toughness samples revealed a normal precrack surface, with no unusual off-angle, out-of-plane behavior. However, the crack development during the J-testing proved to be difficult in most cases. The high ductility of the material combined with the subsized specimen geometry resulted in excessive crack blunting during the tests. Load versus COD data monitored during the J-testing appeared normal, but pop-in events were observed during several of the tests. Because of the difficulties in achieving stable crack growth during the J-tests, post-test data analysis was performed manually and test results are reported as J_Q values only. J-values presented in this report should be used only as a comparison of each material/location tested. They should not be used for comparison or analysis outside the scope of this report. Materials Research and Engineering, Inc. highly recommends that additional tests be performed on standard sized specimens to obtain accurate J_{IC} values.

Results for the J-tests appear in Table 9. Figure 24 shows the trends of the J_Q values as a function of temperature. The J_Q values for each material increased, as expected, as the test temperature was increased.

RECOMMENDATIONS

For the tension and Charpy impact specimens, additional tests must be performed before any opinion can be formed on the precision and accuracy of the data. Multiple specimens tested at a given temperature help determine the scatter band for a given material. Three specimens tested per material type and test temperature are adequate for determining the trends in the response of the material with changing temperature, but are **not** adequate for performing a meaningful statistical analysis. To achieve a better representation of the material, specimens should be chosen from different lots of material and from different locations within each lot.

MRE recommends that additional J-tests be conducted on standard sized fracture toughness samples with a width (W) of 2.0-inches. Specimens of this geometry are more assured of yielding valid results. Another important recommendation is the inclusion of additional test specimens (six to ten) at each temperature to obtain statistically meaningful J-value averages. This will greatly improve the understanding of J-value versus temperature, and will help to quantify the temperature dependence effect of fracture toughness over the entire range of selected test temperatures.

TENSION TESTS AND CHARPY IMPACT TESTS OF WELD SAMPLES AT ROOM TEMPERATURE, 77K, AND 4.5K
(PO: 524368)

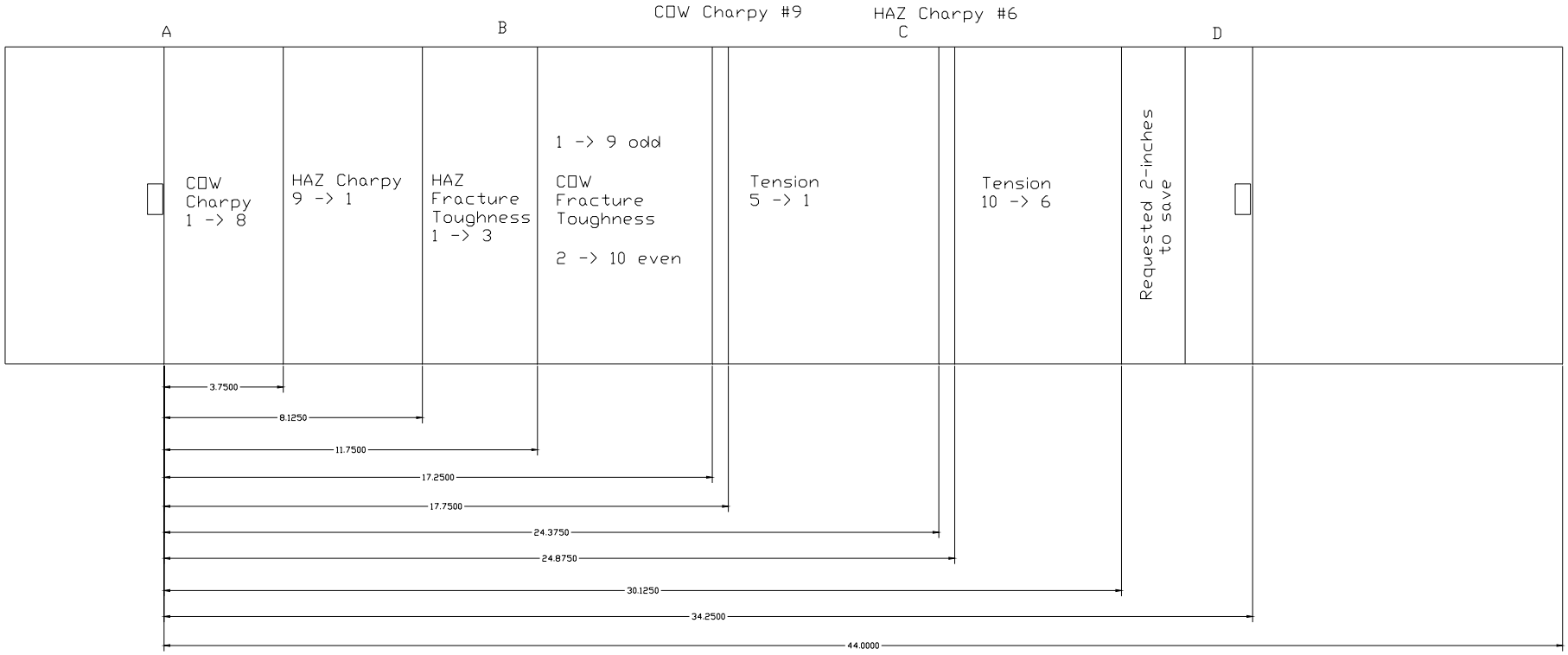

Figure 2. 308L Panel Specimen Locations (dimensions in inches).

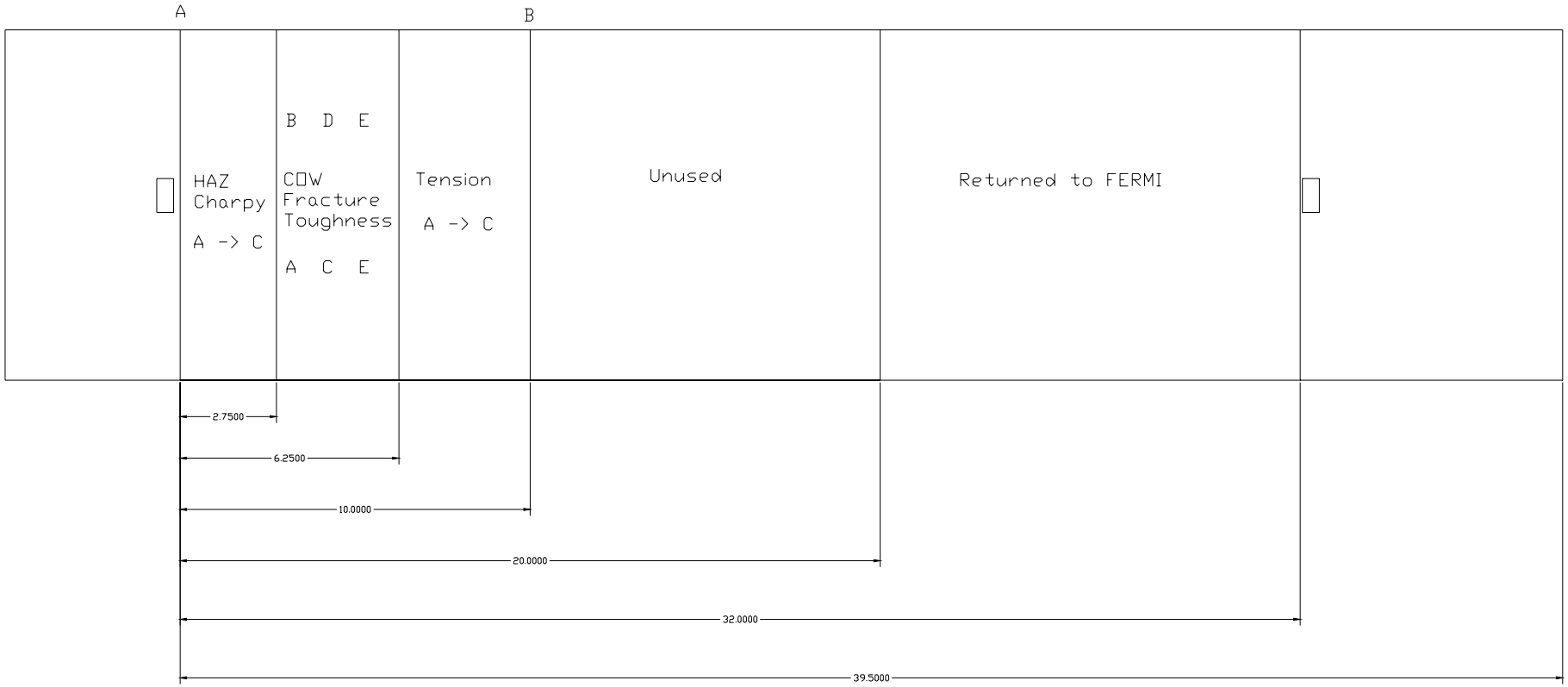

Figure 3. 316L Panel Specimen Locations (dimensions in inches).

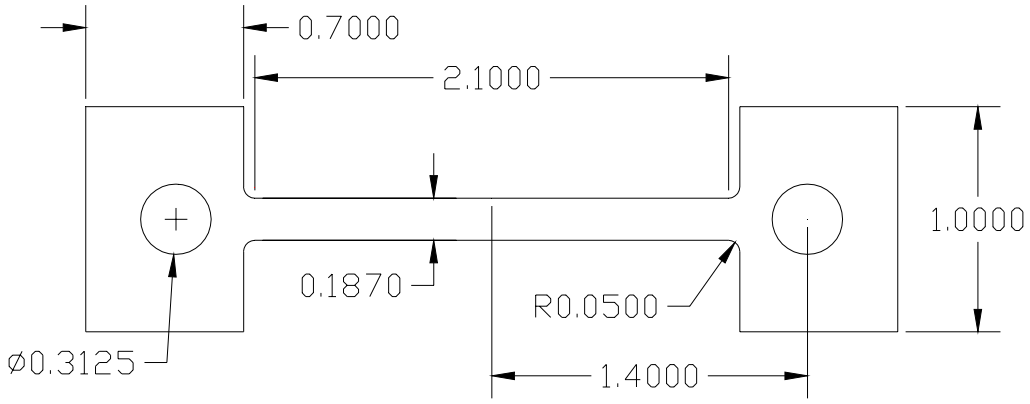

Figure 4. Tension Specimen (dimensions in inches).

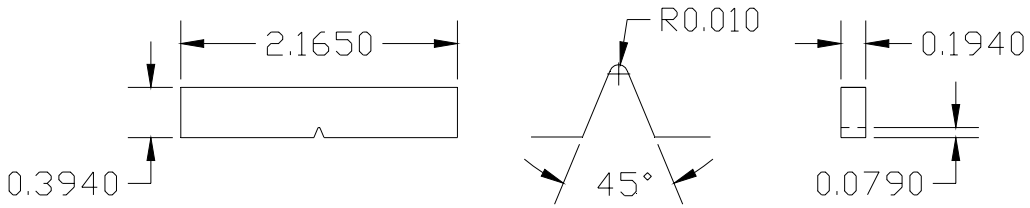

Figure 5. Charpy Impact Specimen (dimensions in inches).

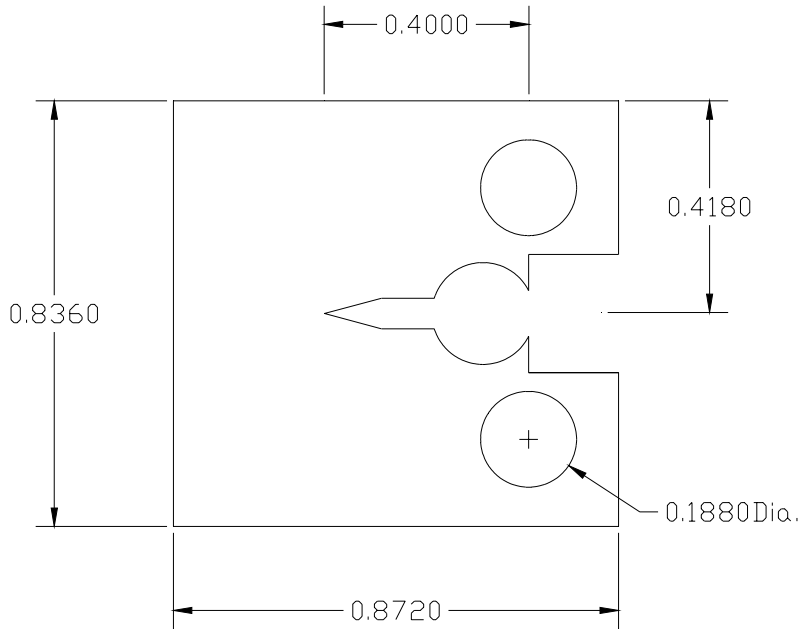

Figure 6. Sub-Sized Compact Tension J_{IC} Specimen (dimensions in inches).

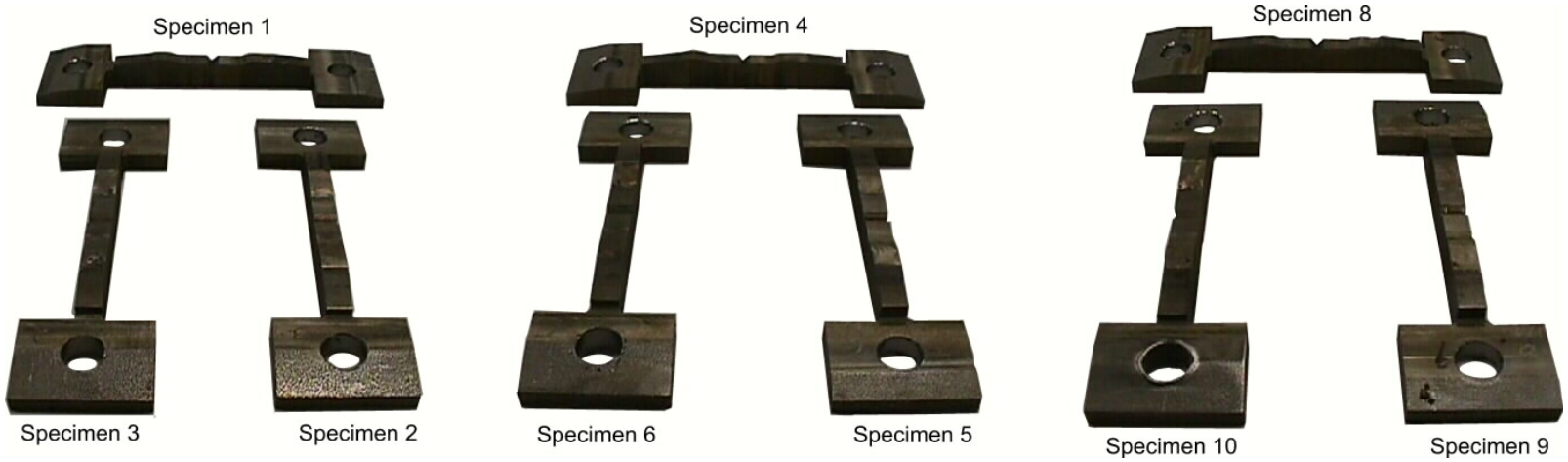

Figure 7. 308L Tension Specimens.

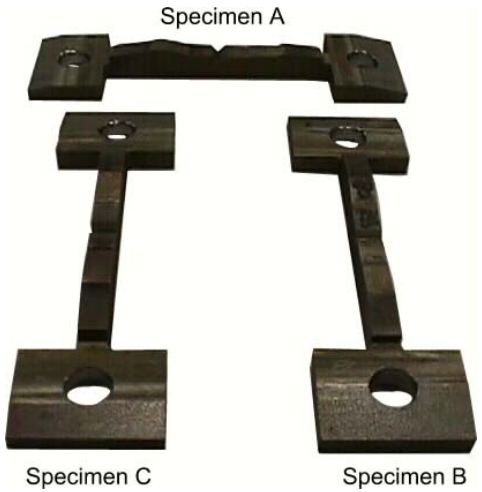

Figure 8. 316L Tension Specimens.

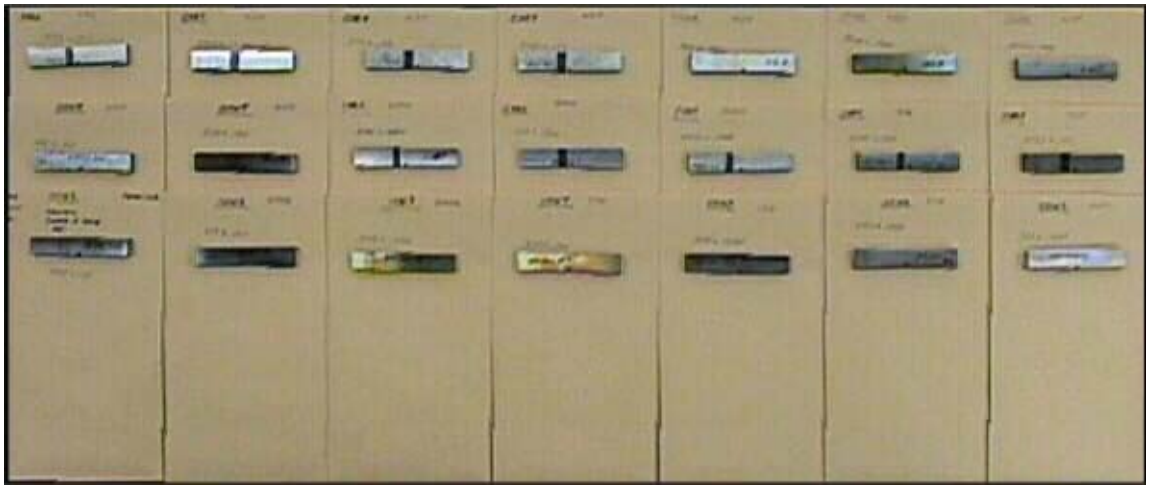

Figure 9. Charpy Impact Specimens.

Figure 10. Representative Charpy Impact Specimen.

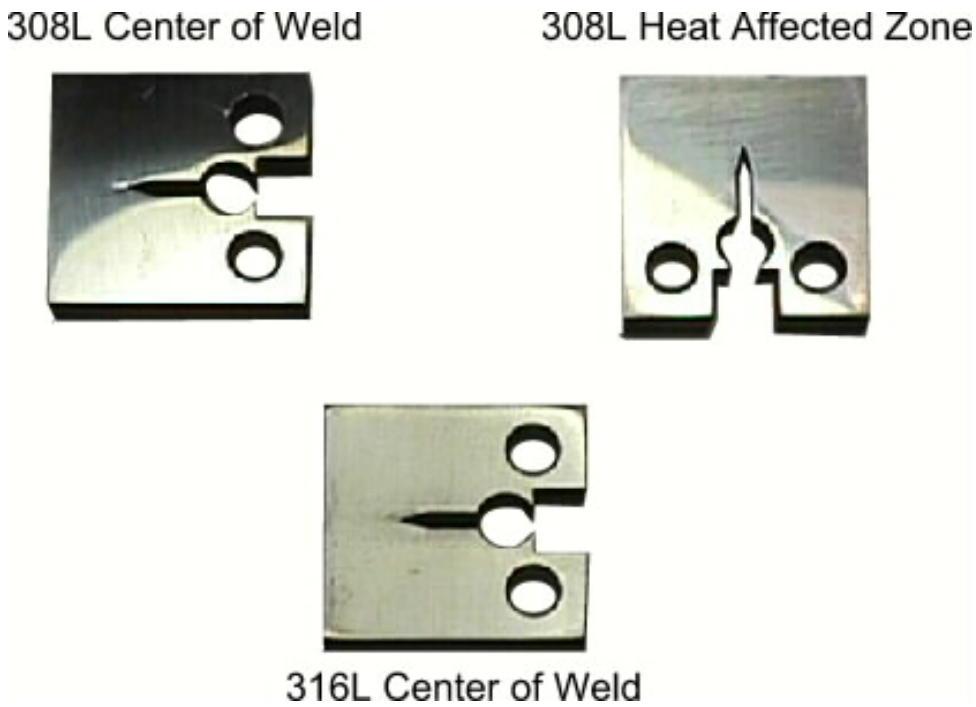

Figure 11. Representative Fracture Toughness Specimens.

Table 4. Tensile Data for 308L Material.

Specimen ID	Test Temperature (K)	Area (in^2)	Maximum Load (lbs)	Ultimate Tensile Strength (ksi)
T3081	300	0.03490	3549	101.7
T3082	300	0.03421	3473	101.5
T3083	300	0.03392	3344	98.6
	Average	**0.03434**	**3455**	**100.6**
	Standard Deviation	**0.00050**	**104**	**1.7**
T3084	77	0.03440	4936	143.5
T3085[a]	77	0.03529	5350	151.6
T3086	77	0.03500	5135	146.7
	Average	**0.03490**	**5140**	**147.3**
	Standard Deviation	**0.00045**	**207**	**4.1**
T3088	4	0.03310	4982	150.5
T3089	4	0.03392	5179	152.7
T30810	4	0.03360	5006	149.0
	Average	**0.03354**	**5056**	**150.7**
	Standard Deviation	**0.00041**	**107**	**1.9**

Notes:

A. Specimen T3085 failed in the center section of the key.

Table 5. Tensile Data for 316L Material.

Specimen ID	Test Temperature (K)	Area (in^2)	Maximum Load (lbs)	Ultimate Tensile Strength (ksi)
T316A	4	0.03529	4958	140.5
T316B	4	0.03480	5498	158.0
T316C	4	0.03320	5441	163.9
	Average	**0.03443**	**5299**	**154.1**
	Standard Deviation	**0.00109**	**297**	**12.2**

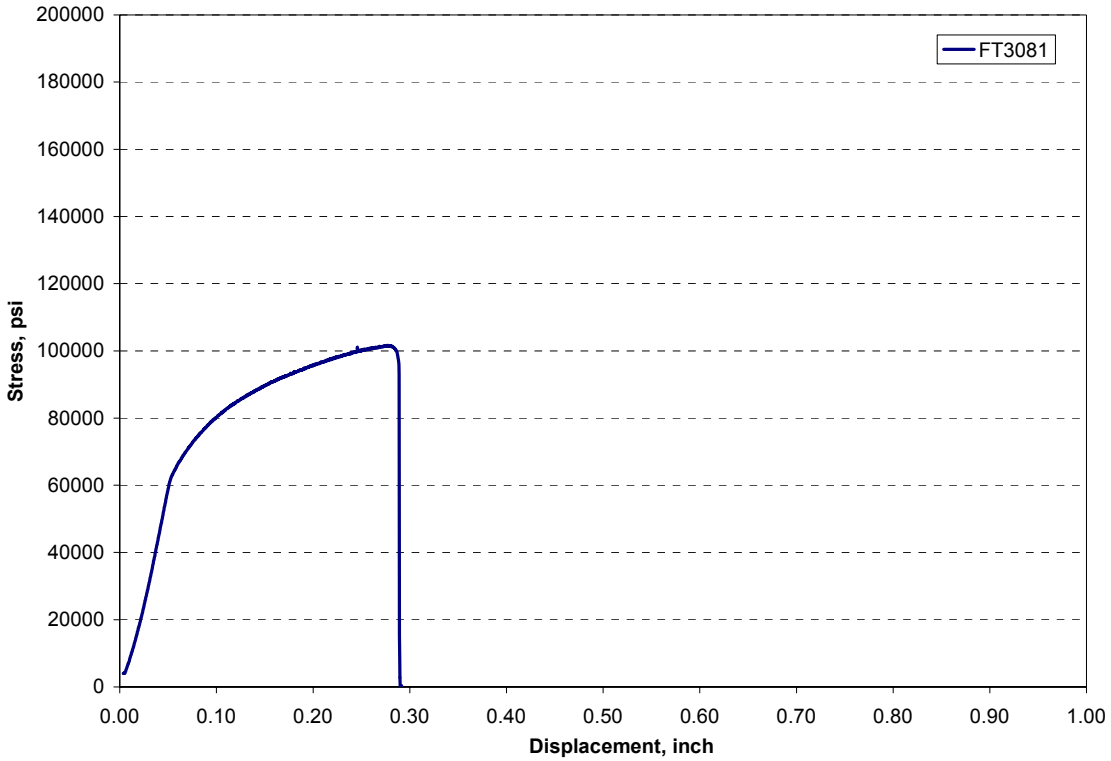

Figure 12. 308L Tension Test at Room Temperature; Specimen #1.

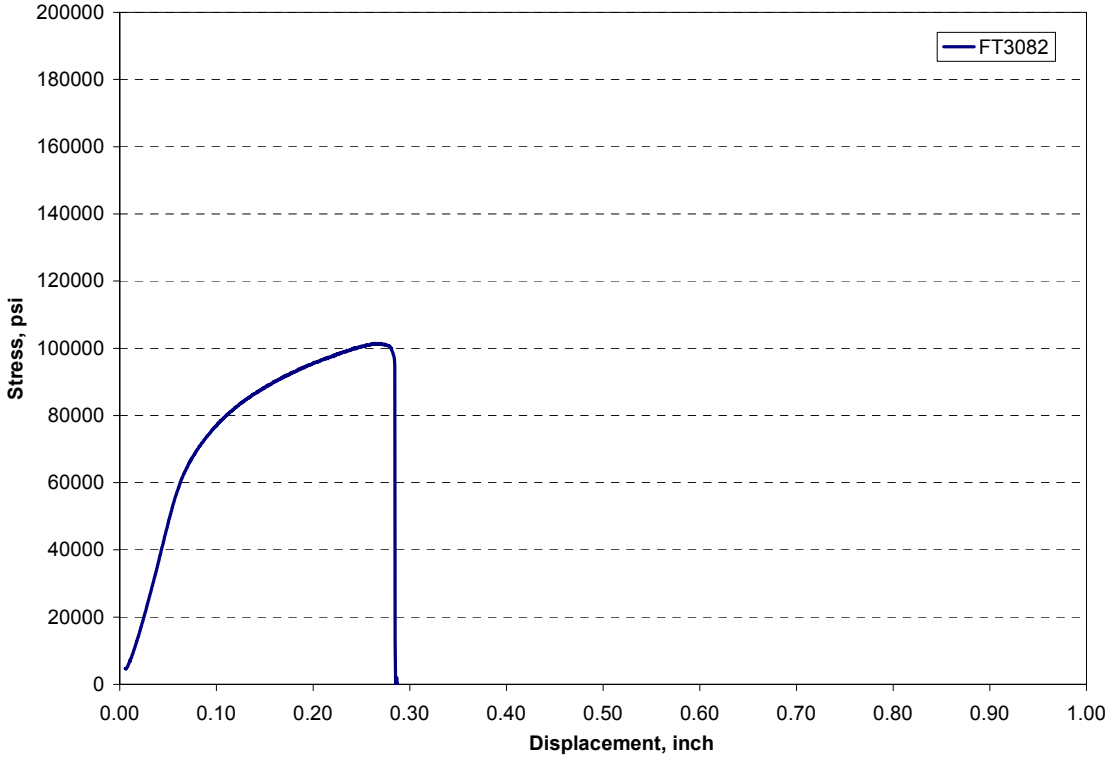

Figure 13. 308L Tension Test at Room Temperature; Specimen #2.

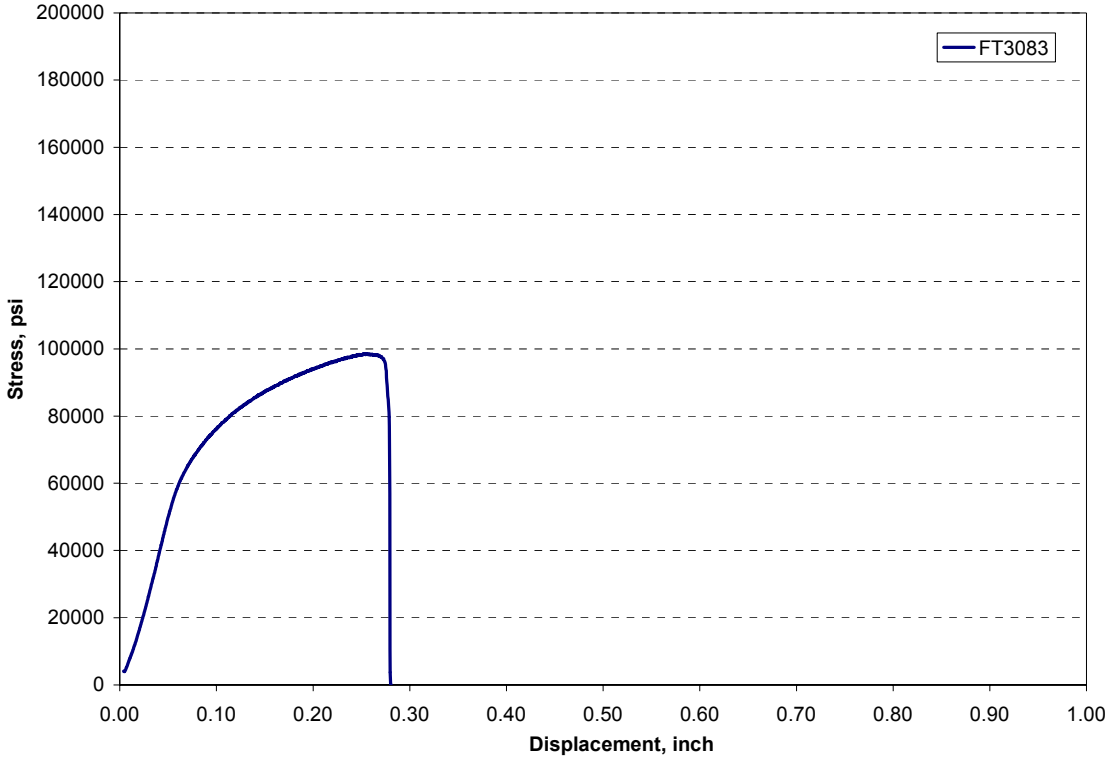

Figure 14. 308L Tension Test at Room Temperature; Specimen #3.

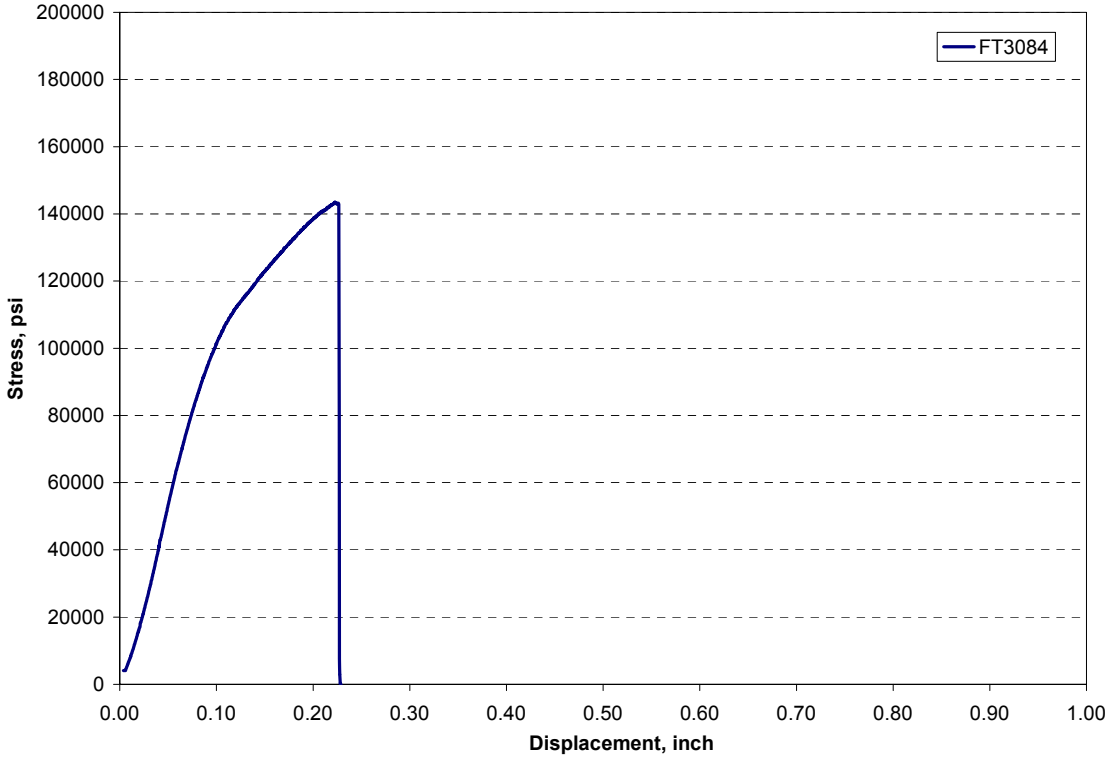

Figure 15. 308L Tension Test at 77K; Specimen #4.

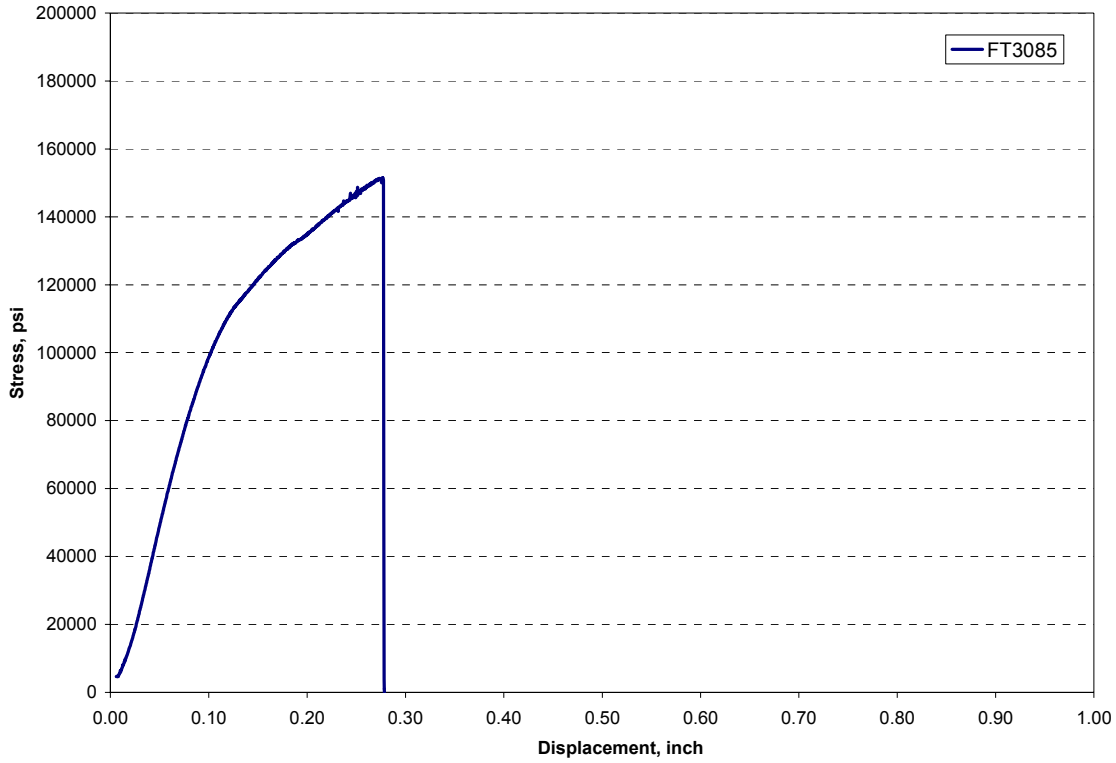

Figure 16. 308L Tension Test at 77K; Specimen #5.

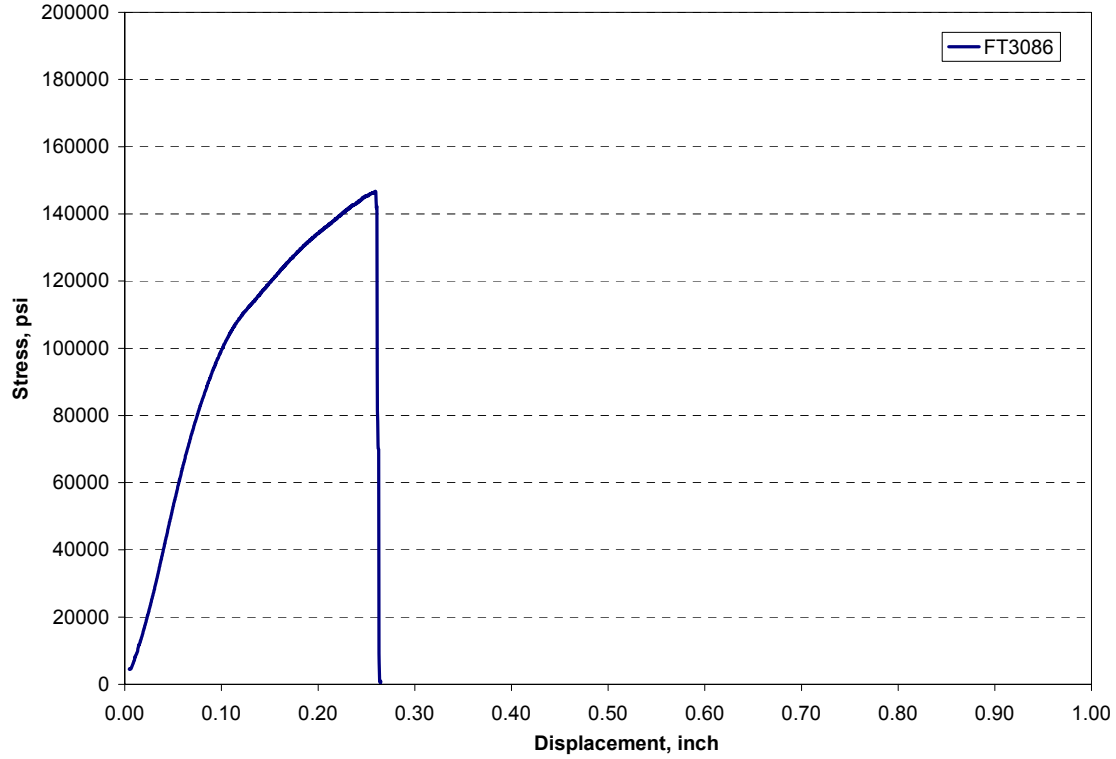

Figure 17. 308L Tension Test at 77K; Specimen #6.

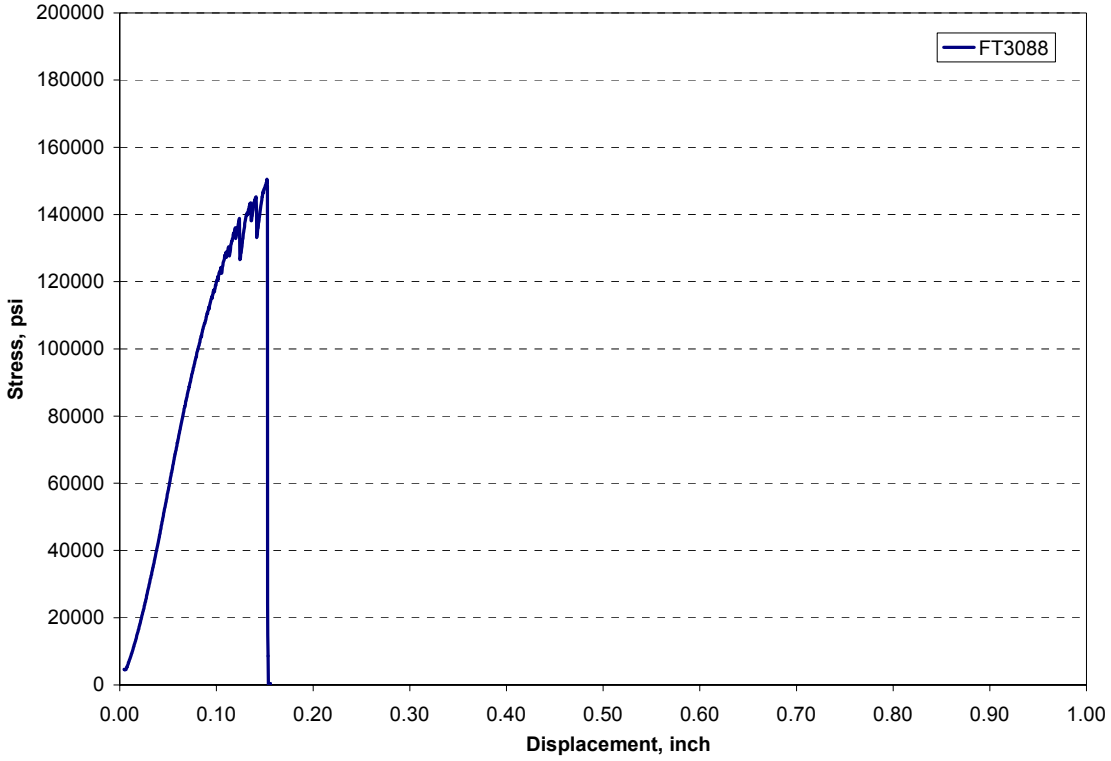

Figure 18. 308L Tension Test at 4K; Specimen #8.

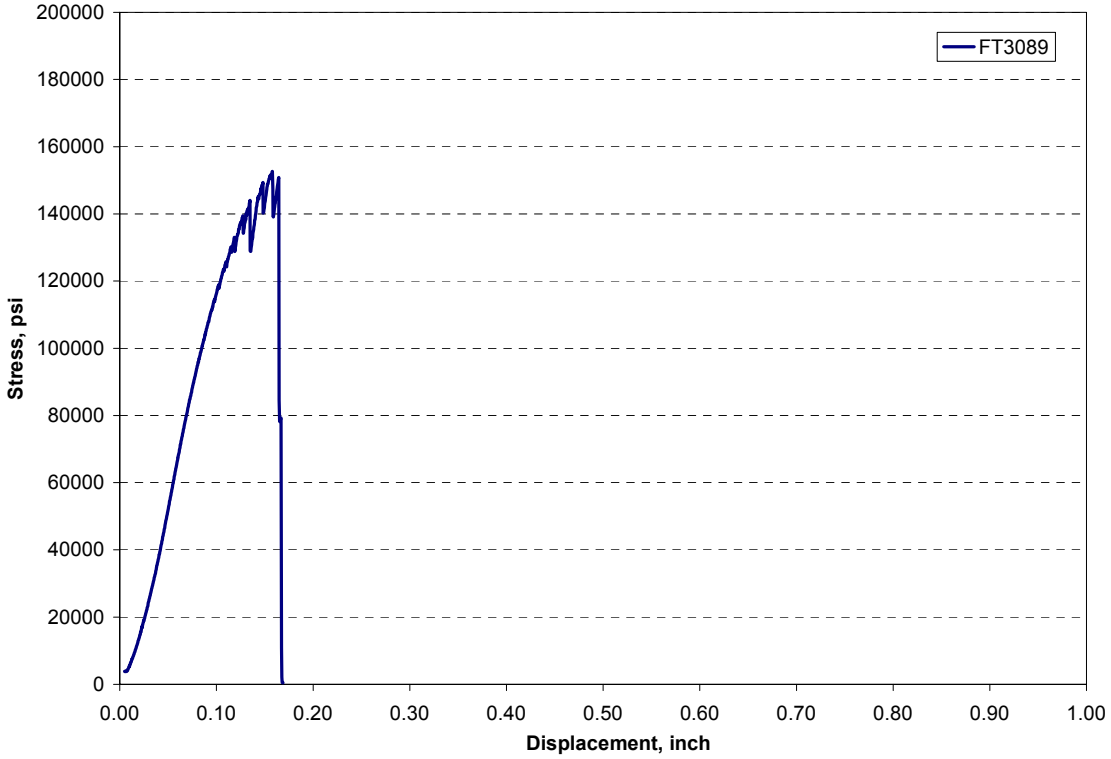

Figure 19. 308L Tension Test at 4K; Specimen #9.

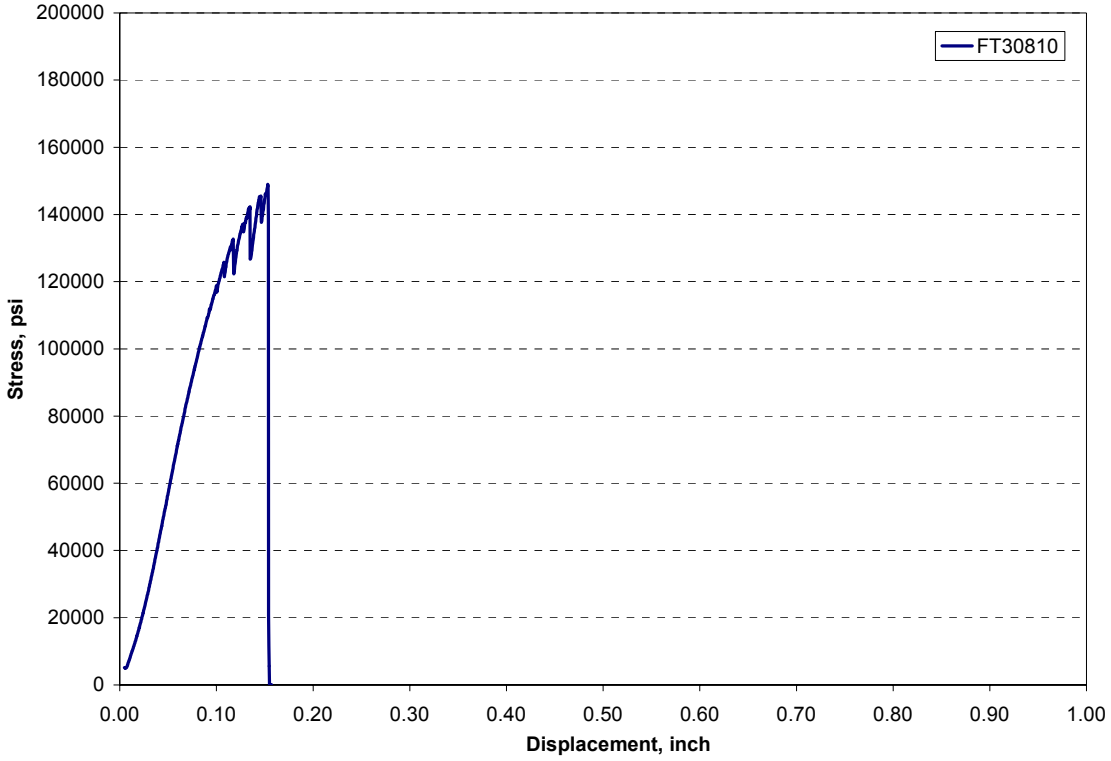

Figure 20. 308L Tension Test at 4K; Specimen #10.

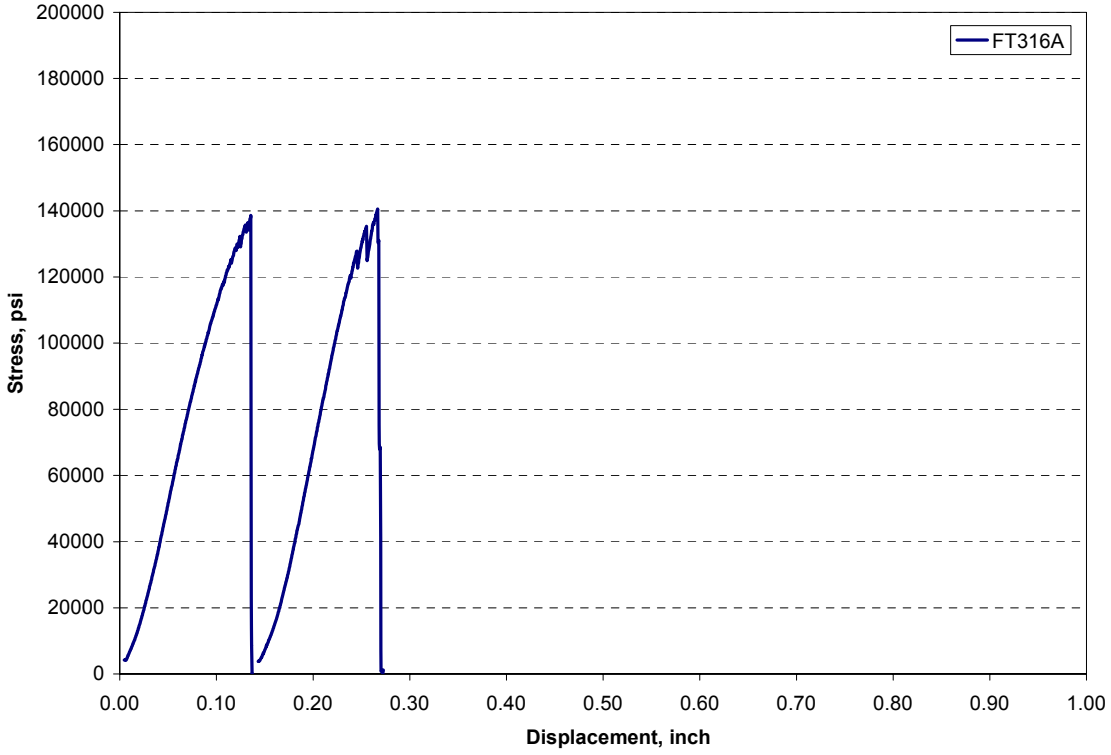

Figure 21. 316L Tension Test at 4K; Specimen #A.

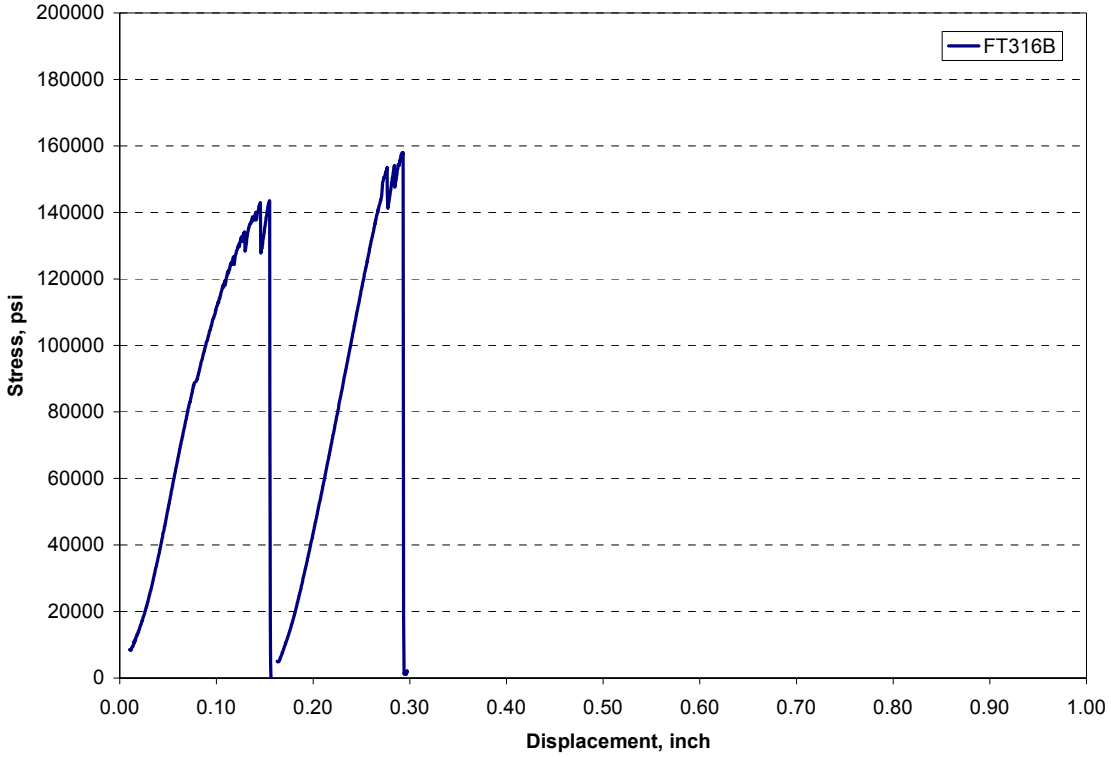

Figure 22. 316L Tension Test at 4K; Specimen #B.

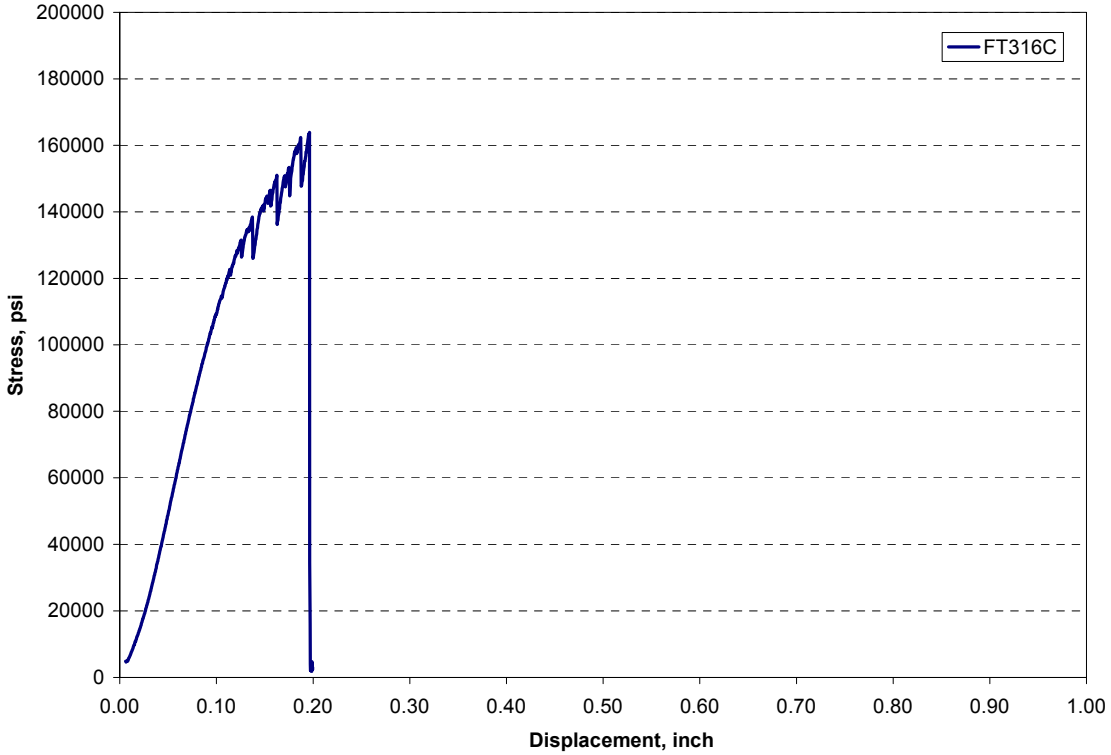

Figure 23. 316L Tension Test at 4K; Specimen #C.

Table 6. Charpy Impact Data for 308L Weld Material.

Specimen ID	Specimen Location	Test Temperature (K)	Energy Absorbed (ft-lbs)	Initial Thickness (in)	Lateral Expansion (in)	Lateral Expansion (%)
CCW1	Weld	300	55.5	0.1950	0.0885	45.4%
CCW2	Weld	300	53.5	0.1940	0.0850	43.8%
CCW3	Weld	300	49.5	0.1935	0.0725	37.5%
	Average		**52.8**	**0.1942**	**0.0820**	**42.2%**
	Standard Deviation		**3.1**	**0.0008**	**0.0084**	**4.2%**
CCW4	Weld	77	37.0	0.1940	0.0520	26.8%
CCW5	Weld	77	38.0	0.1935	0.0495	25.6%
CCW6	Weld	77	36.0	0.1945	0.0515	26.5%
	Average		**37.0**	**0.1940**	**0.0510**	**26.3%**
	Standard Deviation		**1.0**	**0.0005**	**0.0013**	**0.6%**
CCW7	Weld	4.2	37.0	0.1955	0.0460	23.5%
CCW8	Weld	4.2	36.0	0.1990	0.0490	24.6%
CCW9	Weld	4.2	38.0	0.1900	0.0550	28.9%
	Average		**37.0**	**0.1948**	**0.0500**	**25.7%**
	Standard Deviation		**1.0**	**0.0045**	**0.0046**	**2.9%**

Table 7. Charpy Impact Data for 308L Heat Affected Zone Material.

Specimen ID	Specimen Location	Test Temperature (K)	Energy Absorbed (ft-lbs)	Initial Thickness (in)	Lateral Expansion (in)	Lateral Expansion (%)
CHZ1	HAZ	300	48.5	0.1880	0.0720	38.3%
CHZ2	HAZ	300	55.5	0.1905	0.0650	34.1%
CHZ3	HAZ	300	58.0	0.1905	0.0710	37.3%
	Average		**54.0**	**0.1897**	**0.0693**	**36.6%**
	Standard Deviation		**4.9**	**0.0014**	**0.0038**	**2.2%**
CHZ4	HAZ	77	42.5	0.1895	0.0490	25.9%
CHZ5	HAZ	77	49.0	0.1910	0.0480	25.1%
CHZ6	HAZ	77	50.0	0.1900	0.0535	28.2%
	Average		**47.2**	**0.1902**	**0.0502**	**26.4%**
	Standard Deviation		**4.1**	**0.0008**	**0.0029**	**1.6%**
CHZ7	HAZ	4.2	45.5	0.1910	0.0510	26.7%
CHZ8	HAZ	4.2	49.5	0.1930	0.0540	28.0%
CHZ9	HAZ	4.2	55.0	0.1920	0.0570	29.7%
	Average		**50.0**	**0.1920**	**0.0540**	**28.1%**
	Standard Deviation		**4.8**	**0.0010**	**0.0030**	**1.5%**

Table 8. Charpy Impact Data for 316L Weld Material.

Specimen ID	Specimen Location	Test Temperature (K)	Energy Absorbed (ft-lbs)	Initial Thickness (in)	Lateral Expansion (in)	Lateral Expansion (%)
CCW7	Weld	4.2	44.0	0.1955	0.0515	26.3%
CCW8	Weld	4.2	43.0	0.1950	0.0510	26.2%
CCW9	Weld	4.2	37.0	0.1945	0.0525	27.0%
	Average		**41.3**	**0.1950**	**0.0517**	**26.5%**
	Standard Deviation		**3.8**	**0.0005**	**0.0008**	**0.4%**

Table 9. Fracture Toughness Data.

Specimen ID	Test Number	Test Temperature (K)	Material	Yield Strength (psi)	Tensile Strength (psi)	Specimen Thickness (inch)	Specimen Width (inch)	Initial Uncracked Ligament (inch)	Net Grooved Thickness (inch)	J_Q (lbs/inch)
JCOW1 RT	1	300	308L COW	40,000	96,000	0.2530	0.6925	0.2585	0.2030	925
JCOW2 RT	2	300	308L COW	40,000	96,000	0.2540	0.6930	0.2570	0.2030	1,000
JCOW3 RT	3	300	308L COW	40,000	96,000	0.2535	0.6930	0.2570	0.2050	957
									Average:	**961**
JCOW4 77	4	77	308L COW	60,000	180,000	0.2535	0.6920	0.2600	0.2020	642
JCOW5 77	5	77	308L COW	60,000	180,000	0.2525	0.6925	0.2590	0.2070	616
JCOW6 77	6	77	308L COW	60,000	180,000	0.2525	0.6935	0.2600	0.2030	-na-
									Average:	**740**
JCOW7 4	7	4	308L COW	70,000	210,000	0.2530	0.6970	0.2595	0.2010	480
JCOW9 4	9	4	308L COW	70,000	210,000	0.2525	0.6960	0.2600	0.2020	405
JCOW10 4	10	4	308L COW	70,000	210,000	0.2525	0.6980	0.2610	0.2060	419
									Average:	**435**
JHAZ1 RT	1	300	308L HAZ	40,000	96,000	0.2480	0.6970	0.2610	0.1965	580
JHAZ2 RT	2	300	308L HAZ	40,000	96,000	0.2490	0.6820	0.2475	0.1970	707
JHAZ3 RT	3	300	308L HAZ	40,000	96,000	0.2485	0.6955	0.2595	0.1960	623
									Average:	**637**
JCOWA RT	A	300	316L COW	40,000	96,000	0.2490	0.6950	0.2630	0.1955	654
JCOWB RT	B	300	316L COW	40,000	96,000	0.2485	0.6995	0.2675	0.1970	945
JCOWC RT	C	300	316L COW	40,000	96,000	0.2485	0.6925	0.2595	0.1965	950
									Average:	**850**
JCOWD 4	D	4	316L COW	70,000	210,000	0.2480	0.6925	0.2585	0.1980	563
JCOWE 4	E	4	316L COW	70,000	210,000	0.2505	0.6975	0.2605	0.1965	-na-
JCOWF 4	F	4	316L COW	70,000	210,000	0.2505	0.6980	0.2615	0.1965	453
									Average:	**508**

TENSION TESTS AND CHARPY IMPACT TESTS OF WELD SAMPLES AT ROOM TEMPERATURE, 77K, AND 4.5K
(PO: 524368)

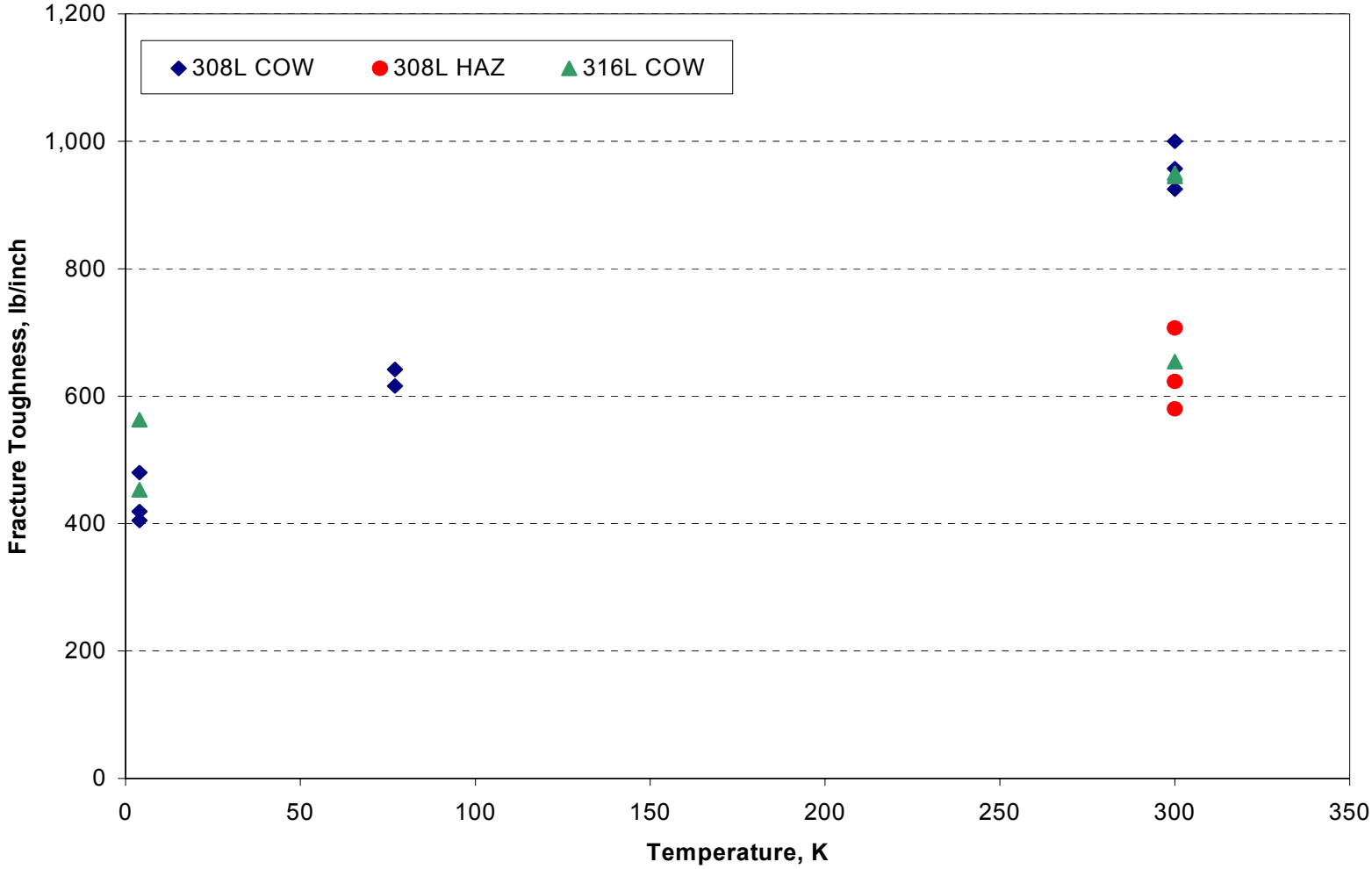

Figure 24. Fracture Toughness Versus Temperature.

H257

HS 000006 CICP 000513 10/23/01 13:21:45 10/23/01 13:21:45

10/23/01
13:21:45

AVESTA STAINLESS INC

PAGE 1
REF # 2000335149

REPORT OF TEST AND ANALYSIS

Customer P.O. & Date	Shipment No.	Mill Order No.	Invoice No.
900VAP009 11/22/00		215853	215853
Inventory For	Shipped Date	Customer Part No	Invoice Date
HOUSTON		N/A	

Sold To:
REYNOLDS ALUMINUM SUPPLY CO
ATTN LINDA WICKAM
P.O. BOX 26885
RICHMOND VA 23261

Ship To:
REYNOLDS
7010 ZOLTOWSKI STREET
HOUSTON TX 77020

Specifications:
DUAL 304L/304 ||MFG IN NEW CASTLE, IN, USA FROM SLABS IMPORTED FROM BRITAIN ||
AMS 5511G EXCEPT LINE MARK RASCO 04:09:29 R2 W/EXCEPT ||ASTM A240-99 ASME SA24
0-98ED ASTM A666-96B ANN COND ONLY ||ASTM A480-99 ASME SA480-98ED ASTM A262-93
A PRAC A ||ASTM A262-93 PRAC E NO GRIPPER MARKS ||RASCO 04:09:29 REV2 W/EXCEPT
||PLATES & TEST PCS SOLUTION ANNEALED @ 1950 DEGREES FARENHEIT MINIMUM. ||THE
N WATER COOLED OR RAPIDLY COOLED BY AIR ||FREE OF MERCURY CONTAMINATION ||HOT
ROLLED, ANNEALED & PICKLED (HRAP) ||BEND TEST OK ||INTERGRANULAR CORROSION OK

Item	Pcs	Gauge	Size	Heat #	Net
01	1	0.7500	120.0000 X 420.0000	807333-3A	11243

TRACER NBR = 807333-3A

1 <--- TOTAL ---> 11243

ALL WEIGHTS EXPRESSED IN "LB", ALL DIMENSIONS EXPRESSED IN "IN"

AL	C	CB	CO	CR	CU	MN	MO	N	NI	P	S	SI
.004	.016	.008	.12	18.24	.36	1.41	.33	.075	8.59	.028	.003	.34

TI	OTH/EACH
.003	.014

Heat-Slab/Pc #	Yield KSI	Tensile KSI	% R/A	% Elong In 2"	Grain Size	Hardness HR B
807333-3A	46788	85315	68.2	58.1	5	82

Notes: KNOWINGLY & WILLFULLY FALSIFYING OR CONCEALING A MATERIAL FACT ON THIS FORM OR MAKING FALSE, FICTITIOUS OR FRAUDULENT STATEMENTS OR REPRESENTATIONS HEREIN COULD CONSTITUTE A FELONY PUNISHABLE UNDER FEDERAL STATUTES.

Auth By: JAMES DOUBMAN 11/30/00

H250

Avesta Sheffield Plate Inc.

Avesta Sheffield

TW APPROVED

Certificate of Analysis and Tests

HEAT & PIECE 806263-4A 6/22/00

UR ORDER 212613 - 01

SOLD TO: REYNOLDS ALUMINUM SUPPLY CO
ACCOUNTS PAYABLE
P. O. BOX 26885
RICHMOND VA 23261

SHIP TO: REYNOLDS
7010 ZOLTOWSKI STREET
HOUSTON TX 77020
764001-0020

YOUR ORDER & DATE

TAG# 02645547

900VAP861 0/00/00

ITEM DESCRIPTION

HEAT & PIECE 806263 - 4A
WEIGHT 5932
FINISH 1
GRADE 304 UNS-S30400
DIMENSIONS .750 X 96.000 X 277.000 EXACT

SPECIFICATIONS

*** MFG IN NEW CASTLE, IN, USA
ASTM A240-99 ASME SA240-98ED
RASCO 04:09:29 REV2 W/EXCEPT
AMS 5513G EXCEPT LINE MARK
ASTM A262-93 PRAC E
NO WELD REPAIRS

FROM SLABS IMPORTED FROM BRITAIN
ASTM A666-96B ANN COND ONLY
ASTM A480-99 ASME SA480-98ED
ASTM [illegible] PRAC A
NO [illegible]

PLATES & TEST PCS SOLUTION ANNEALED [illegible] 950 DEGREES FAHRENHEIT MINIMUM.
THEN WATER COOLED OR RAPIDLY COOLED [illegible] AIR
FREE OF MERCURY CONTAMINATION
HOT ROLLED, ANNEALED & PICKLED (HR[illegible]

MECHANICAL & OTHER TESTS

HARDNESS RB	81
GRAIN SIZE	5
YIELD STRENGTH (PSI)	46710
TENSILE STRENGTH (PSI)	88068
BEND	OK
INTERGRANULAR CORROSION	OK
ELONGATION % IN 2"	60.5
REDUCTION OF AREA %	68.1

QMI REGISTERED QUALITY SYSTEM
ISO 9002-1994
QMI Cert. #
003861

CHEMICAL COMPOSITION

CARBON	(C)	.04
MANGANESE	(MN)	1.47
PHOSPHORUS	(P)	.025
SULFUR	(S)	.003
SILICON	(SI)	.42
CHROMIUM	(CR)	18.39
NICKEL	(NI)	8.19
COBALT	(CO)	.18
COPPER	(CU)	.34
MOLY	(MO)	.25
NITROGEN	(N)	.07
COLUMBIUM	(CB)	.020
TITANIUM	(TI)	.003
ALUMINUM	(AL)	.005
TIN	(SN)	.011

KNOWINGLY & WILLFULLY FALSIFYING OR CONCEALING A MATERIAL FACT ON THIS FORM, OR MAKING FALSE, FICTITIOUS OR FRAUDULENT STATEMENTS OR REPRESENTATIONS HEREIN COULD CONSTITUTE A FELONY PUNISHABLE UNDER FEDERAL STATUTES.

JAMES DOUBMAN, QUALITY ASSURANCE MANAGER

Sheffield Plate Inc.

CKCL 0105

MILL CERTIFICATE

BN 10204 3.1B

D. K. C (DAEKYUNG CORP.)
612-1 GO HYUN-DI, CHANG HA-MYUN, BUK-GU, POHANG CITY, KYUNG BUK, KOREA
POHANG FACTORY: TEL.(054)232-3120, FAX.(054)232-3122
SEOUL OFFICE : TEL.(02)584-7834, FAX.(02)584-7819
PUSAN OFFICE : TEL.(051)325-3231, FAX.(051)325-3243

We certify that undermentioned material has been produced & inspected in accordance with order prescriptions and required specification.

DESCRIPTION : HOT-ROLLED STAINLESS STEEL PLATE

Certificate Ref. No. : 2001-0402-LH/S-1-010 5/7
Issuing Date : Apr. 02 2001
Purchase Order No.:
CONTRACT No.: 200102-51072

END USER : TA CHEN INTERNATIONAL
CUSTOMER :
SPECIFICATION : ASTM A 240 / ASME SA 240
TYPE & FINISH : TP 304/304L & NO.1

ORIGINAL

Bundle No	제강번호 HEAT No.	제품번호 PLATE No.	제품치수 DIMENSIONS (INCH) T	W	L	수량 QUANTITY	중량 WEIGHT (Kg)	POSITION	DIRECTION	G L	TENSILE TEST 0.2%	0.5%	T.S	EL	HARDNESS TEST HRB	DIMENSION		화학성분 CHEMICAL COMPOSITION(%) C	Si	Mn	P	S	Cr	Ni		N	충격시험 IMPACT TEST
											KPa			%													
										MIN	170		485	40	92												
552	T65602	E33247-3-02	1/2	72	240	1	1,143	T	C	A	281.3	308.7	653.3	60.5	85.3	L		0.025	0.46	1.41	0.026	0.002	18.19	8.21		0.04	
442	T65602	E33120-1-01	5/8	96	240	1	1,907	T	C	A	271.7	320.4	658.2	60.0	85.2	L		0.025	0.46	1.41	0.026	0.002	18.19	8.21		0.04	
442	T65602	E33120-1-02	5/8	96	240	1	1,907	T	C	A	271.7	320.4	658.2	60.0	85.2	L		0.026	0.47	1.46	0.029	0.001	18.29	8.22		0.04	
402	T62832	E31798-2-01	3/4	96	240	1	2,291	T	C	A	256.7	302.1	627.9	64.6	83.5	L		0.023	0.46	1.43	0.026	0.002	18.15	8.18		0.04	
102	T65601	E33110-2-01	3/4	96	240	1	2,291	T	C	A	258.7	307.4	653.3	64.3	84.8	L		0.023	0.46	1.43	0.026	0.002	18.15	8.18		0.04	
102	T65601	E33110-3-01	3/4	96	240	1	2,291	T	C	A	258.7	307.4	653.3	64.3	84.8	L		0.025	0.46	1.41	0.026	0.002	18.19	8.21		0.04	- H237
488	T65602	E33190-3-01	3/4	72	240	1	1,719	T	C	A	254.0	298.9	639.2	64.4	84.8	L		0.025	0.46	1.41	0.026	0.002	18.19	8.21		0.04	
552	T65602	E33190-2-02	3/4	72	240	1	1,719	T	C	A	254.0	298.9	639.2	64.4	84.8	L		0.025	0.46	1.41	0.026	0.002	18.19	8.21		0.04	
467	T65602	E33191-1-01	3/4	72	240	1	1,719	T	C	A	278.0	320.8	644.4	63.3	83.5	L		0.025	0.46	1.41	0.026	0.002	18.19	8.21		0.04	

Sub Total	9	16,987	Grade Total	45	81,443	Grand Total	45	81,443

DIMENSIONAL EXAMINATION: GOOD

HEAT TREATMENT : SOLUTION ANNEALED 1060 ℃ WATER COOLING

SURFACE CONDITION : GOOD

ADDITIONAL SPEC
ASTM A480

SIGNATURE

T:TOP M:MIDDLE B:BOTTOM
L:LONGITUDINAL C:CROSSWISE
1:10x10mm 2:7.5x10mm 3:5.0x10mm 4:2.5x10mm
RECTANGULAR A:50mm B:70mm C:100mm D:≥45% A
ROUND E:50mm F:70mm G:≥45% A
1:STEP STRUCTURE 2:DUAL STRUCTURE 3:DITCH STRUCTURE 4:ISOLATED FERRITE POOLS 5:INTERGRANULAR DITCHS 6:END GRAIN PITTING
L:LADLE ANALYSIS P:PRODUCT ANALYSIS

SIGNATURE
U. K. Hong

Rev 3 (2000. 08. 01)

DAEKYUNG CORP.

F213-01(A4)

CKCL 0105

MILL CERTIFICATE

EN 10204 3.1B

D. K. C (DAEKYUNG CORP.)
612-1 GO HYUN-RI, CHUNG HA-MYEON, BUK-GU, POHANG CITY, KYUNG BUK, KOREA
POHANG FACTORY : TEL.(054)232-3120, FAX.(054)232-3122
SEOUL OFFICE : TEL.(02)594-7824, FAX.(02)594-7819
PUSAN OFFICE : TEL.(051)325-3251, FAX.(051)325-3242

We certify that undermentioned material has been produced & inspected in accordance with order prescriptions and required specification.

DESCRIPTION : HOT-ROLLED STAINLESS STEEL PLATE

Certificate Ref. No. : 2001-0402-LHS-1-010 5/7
Issuing Date : Apr. 02. 2001
Purchase Order No.:
CONTRACT No.: 200102-51072

END USER : TA CHEN INTERNATIONAL
CUSTOMER :
SPECIFICATION : ASTM A 240 / ASME SA 240
TYPE & FINISH : TP 304/304L & NO.1

ORIGINAL

Bundle No	제강번호 HEAT No.	제품번호 PLATE No.	제품치수 DIMENSIONS (INCH) T	W	L	수량 QUANTITY	중량 WEIGHT (Kg)	POSITION	DIRECTION	G L	TENSILE TEST 0.2%	1.0%	T.S	EL.	HARDNESS TEST	DIVISION	화학성분 CHEMICAL COMPOSITION(%) C	Si	Mn	P	S	Cr	Ni		N	충격시험 IMPACT TEST
											MPa			%	HRB		Const.									
											170		485	40	92		MAX. 0.03	0.75	2.00	0.045	0.03	20.0	12.0		0.10	
																	MIN.					18.0	8.00			
552	T65602	E33247-3-02	1/2	72	240	1	1,143	T	C	A	261.0	306.7	653.3	60.5	85.3	L	0.025	0.46	1.41	0.026	0.002	18.18	8.21		0.04	
442	T65602	E33120-1-01	5/8	96	240	1	1,907	T	C	A	271.7	320.4	658.2	60.0	85.2	L	0.025	0.46	1.41	0.026	0.002	18.18	8.21		0.04	
442	T65602	E33120-1-02	5/8	96	240	1	1,907	T	C	A	271.7	320.4	658.2	60.0	85.2	L	0.026	0.47	1.46	0.029	0.001	18.29	8.22		0.04	— H236
402	T62602	E31798-2-01	3/4	96	240	1	2,291	T	C	A	257.2	302.1	627.9	64.8	83.5	L	0.023	0.48	1.43	0.028	0.002	18.15	8.18		0.04	
102	T65601	E33110-2-01	3/4	96	240	1	2,291	T	C	A	258.7	307.4	653.3	64.3	84.8	L	0.023	0.48	1.43	0.028	0.002	18.15	8.18		0.04	
102	T65601	E33110-3-01	3/4	96	240	1	2,291	T	C	A	258.7	307.4	653.3	64.3	84.8	L	0.025	0.46	1.41	0.026	0.002	18.18	8.21		0.04	
468	T65602	E33190-2-01	3/4	72	240	1	1,719	T	C	A	254.0	298.9	639.2	64.4	84.8	L	0.025	0.46	1.41	0.026	0.002	18.19	8.21		0.04	
552	T65602	E33190-2-02	3/4	72	240	1	1,719	T	C	A	254.0	298.9	639.2	64.4	84.8	L	0.025	0.46	1.41	0.026	0.002	18.19	8.21		0.04	
467	T65602	E33191-1-01	3/4	72	240	1	1,719	T	C	A	278.0	320.6	644.4	63.3	83.5	L	0.025	0.46	1.41	0.026	0.002	18.19	8.21		0.04	

Sub Total	9	16,987	Grade Total	45	61,443	Grand Total	45	61,443

DIMENSIONAL EXAMINATION: GOOD

HEAT TREATMENT : SOLUTION ANNEALED 1060 ℃ WATER COOLING

SURFACE CONDITION : GOOD

ADDITIONAL SPEC
ASTM A480

SIGNATURE

SIGNATURE
U. K. Hong

T:TOP M:MIDDLE B:BOTTOM
L:LONGITUDINAL C:CROSSWISE
1:10x10mm 2:7.5x10mm 3:5.0x10mm 4:2.5x10mm
RECTANGULAR A:50mm B:70mm C:100mm D:5.65√A
ROUND E:50mm F:70mm G:5.65√A
1:STEP STRUCTURE 2:DUAL STRUCTURE 3:DITCH STRUCTURE 4:ISOLATED FERRITE POOLS 5:INTERDENDRITIC DITCHS 6:END GRAIN PITTING
L:LADLE ANALYSIS P:PRODUCT ANALYSIS

Rev. 3 (2000. 08. 01)

DAEKYUNG CORP.

F213-01(A4)

Ashland, KY 41101
(502) 347-6000

METALLURGICAL TEST REPORT

NORTH AMERICAN STAINLESS

Date: 10/06/2001 Page: 1

Certificate: 138198 03

Customer: 0001 121

BILL TO:
METROLOG ALUMINUM SUPPLY CO.
7310 BOLEYNEST ST.
HOUSTON, TX 77026

SHIP TO:
METROLOG ALUMINUM SUPPLY CO.
7410 BOLEYNEST ST.
HOUSTON, TX 77026

Steel: 304

Finish: MRAP

Specification: ASTM A262/98 Pract E

NAS Order: XN 0189385 01

Your Order: 098VM0272

PRODUCT DESCRIPTION:

STAINLESS STEEL PLATE, HOT ROLLED, ANNEALED AND PICKLED.
SMA240/00,A480/98b,A666/00,AMSSA240/98,SA480/98,SA666/98-A
QW766D-A X MO PKGS,AMS5110 X MOX,MTL40638,AMDA,X CROSS REAS

REMARKS:

Material free from mercury contamination. No weld repairs
Minimum anneal temperature 1950 F

Product ID #	Coil #	Thickness	Width	Weight	Length	Mark	Pieces	ITEM CODE/BA
.11ANV6 BC	* 11ANV6 BC	.7500	60.0000	2,035	144.0000	SHEET	1	1 67526000 - HJ3C
.110X96 HB	* 110X96 HB	.7500	60.0000	2,035	144.0000	SHEET	2	1 67526000

CHEMICAL ANALYSIS

Heat	C	CR	CU	MN	MO	N	NI	P	S	SI
ANV6	.019	18.250	.360	1.560	.460	.066	8.160	.031	.001	.470
0X96	.016	18.280	.450	1.500	.410	.061	8.140	.036	.001	.480

MECHANICAL PROPERTIES

Product ID #	Coil #	Loc	UTS KSI	.2% YS KSI	ELONG %-2"	Hard RB	A 262 Pr A
11ANV6 BC	11ANV6	F 7	86.05	41.36	59.00	85.00	OK
110X96 HB	110X96	F 7	87.94	45.68	56.50	83.50	OK

QC ENGINEER 10/24/2001

08/08/02 THU 06:27 FAX 630 840 5719 FERRILAD PROCUREMENT

NAB NORTH AMERICAN STAINLESS

METALLURGICAL TEST REPORT

Shea, KY 41045-96
(502) 347-6000

Date: 10/04/2001 Page: 1

Certificate: 136198 02

Customer: 0001 121

Mail To:
REYNOLDS ALUMINUM SUPPLY CO.
7010 KOLKOWSKI ST.
HOUSTON, TX 77020

Ship To:
REYNOLDS ALUMINUM SUPPLY CO.
7010 KOLKOWSKI ST.
HOUSTON, TX 77020

Steel: 304

Finish: NAAP

Corrosion: ASTM A262/98 Prac E

Your Order: 098VH0272

NAS Order: EN 0189382 01

PRODUCT DESCRIPTION:

STAINLESS STEEL PLATE, HOT ROLLED, ANNEALED AND PICKLED.
ASTM A240/00, A480/98b, A666/00, ASME SA240/98, SA480/98, SA666/98-A
QQ-S765D-A X NO FERN, AMS5511G X MEK, MIL-6043B, AMD3, X CRNE MEAS

REMARKS:

Material free from mercury contamination. No weld repairs.
Minimum anneal temperature 1950 F

Product ID #	Coil #	Thickness	Width	Weight	Length		Mark	Pieces	ITEM CODE/KS
110X38 DB	* 110X38 DB	.7500	48.0000	1,520	144.0000	SHEET	1	1	47525000

CHEMICAL ANALYSIS

Heat	C	CR	CU	MN	MO	N	NI	P	S	SI
0X38	.024	18.300	.300	1.550	.400	.062	8.140	.031	.001	.460

MECHANICAL PROPERTIES

Product ID #	Coil #	loc dir	UTS KSI	.2% YS KSI	ELONG %-2"	Hard RB	A 262 Pr A
110X38 DB	110X38	F T	88.75	41.74	53.00	86.00	OK

QC ENGINEER [signature] 10/24/2001

By: RASCO-DALLAS; 10/24/01 11:39AM ALLEGHENY LUDLUM

Allegheny Ludlum
Jessop Specialty Products
500 Green Street
Washington, PA 15301
ATTN:BETH

CERTIFIED MATERIAL TEST REPORT

OUR ORDER NO.	HD9504791 Page 2
YOUR ORDER NO.	900VAL064
MEMO NO.	167598-00
DATE	05/01/1999
SALESMAN NO.	581

Bill To REYNOLDS ALUMINUM SUPPLY
ATTN: ACCOUNTS PAYABLE
P O BOX 26885
RICHMOND VA 23261

REYNOLDS ALUMINUM CO
3900 PINSON VALLEY PARKWAY
BIRMINGHAM AL 35217

Helen M. O'Connor
AUTHORIZED SIGNATURE

CONTACT WITH IRON WAS MINIMIZED
USA ORIGIN EXCLUDING MATERIAL PRODUCED FROM HEAT NUMBERS FOLLOWED BY THE LETTER C,F,K,L,N,T,OR V

EXCEPT AS OTHERWISE NOTED, THIS MATERIAL HAS BEEN MANUFACTURED AND TESTED IN ACCORDANCE WITH THE LISTED SPECIFICATIONS AND RESULTS CONFORM TO THE SPECIFICATION AND ORDER REQUIREMENTS

nt By: RASCO-DALLAS; 10/29/01 11:38AM ALLEGHENY LUDLUM - WASHINGTON

H233

Allegheny Ludlum
Jessop Specialty Products
500 Green Street
Washington, PA 15301
ATTN:BETH

CERTIFIED MATERIAL TEST REPORT

OUR ORDER NO	M09504791
YOUR ORDER NO.	900VAL084
MEMO NO.	167598-00
DATE	05/01/1999
SALESMAN NO	581

Kevin M. O'Connor
AUTHORIZED SIGNATURE

Bill REYNOLDS ALUMINUM SUPPLY
To ATTN: ACCOUNTS PAYABLE
P O BOX 26885
RICHMOND VA 23261

REYNOLDS ALUMINUM CO
3900 PINSON VALLEY PARKWY
BIRMINGHAM AL 35217

JESSOP T 304L STAINLESS HRAP
AMS 5513F; ASTM A240-96a; ASME SA-240-A97; ASTM A480-96;
ASTM A262-93a PRACTICE E; RASCO SPEC 04:09:32 REV. 1;
WRIVE CLM;

Heat	Slip	Lot No	Size	Pcs	Weight
894810	71797 A	64007	.7500 x 96.0000 x 277.0000	1	5932
From slip 13190 REQN 007001380 PART# 02657245					
885010	71134 A	63686	.3125 x 96.0000 x 280.0000	1	2566
From slip 13338 REQN 007001380 PART# 02657245					
885063	71587 A	63478	.7500 x 96.0000 x 275.0000	1	5889
From slip 12033 REQN 007001380 PART# 02657245					
885081	70961 A	70961	.7500 x 96.0000 x 272.0000	1	5825 – H233
From slip 13009 REQN 007001380 PART# 02657246					

Heat	C	MN	P	S	SI	NI	CR	MO	CU	CO	N
894810	.020	1.72	.031	.0006	.33	8.23	18.23	.42	.15	.34	.096
885010	.025	1.73	.029	.0007	.28	8.23	18.33	.47	.16	.37	.085
885063	.022	1.70	.031	.0009	.48	8.29	18.31	.41	.14	.39	.089
885081	.025	1.70	.031	.0008	.31	8.22	18.27	.46	.15	.39	.08

Lot No	Gauge	Yield Strength	Tensile Strength	Elong	Red. of Area	Hardness	Bend	Corrosion	Grain Size
64007	.7500	42.2 KSI	89.4 KSI	57.0	78.0	BHN170		OK	
63686	.3125	49.5 KSI	88.2 KSI	54.0	78.0	B83-86	OK	OK	
63478	.7500	39.9 KSI	87.4 KSI	62.0	81.0	BHN179		OK	
70961	.7500	39.9 KSI	86.0 KSI	62.0	77.0	BHN163		OK	

MATERIAL WAS NOT WELDED
MATERIAL WAS PRODUCED WITHOUT KNOWN CONTACT WITH MERCURY OR LOW MELTING POINT CONTAMINANTS

EXCEPT AS OTHERWISE NOTED, THIS MATERIAL HAS BEEN MANUFACTURED AND TESTED IN ACCORDANCE WITH THE LISTED SPECIFICATIONS AND DESIGN CONFORM TO THE SPECIFICATION AND ORDER REQUIREMENTS

2pc

AUG-07-2002 WED 03:44 PM 18007474567 FAX NO. 18477460183 P. 03

OCT-25-2001 THU 01:41 PM 257396657

10/25/01 3:23PM ALLEGHENY LUDLUM - WASHINGTON

H233

Allegheny Ludlum
Jessop Specialty Products
500 Green Street
Washington, PA 15301
ATTN:BETH

CERTIFIED MATERIAL TEST REPORT

OUR ORDER NO. M09504791
YOUR ORDER NO. 900VAL064
MEMO NO. 167598-01 REVISION
DATE 10/25/2001
SALESMAN NO. 581

Bill To REYNOLDS ALUMINUM SUPPLY
ATTN: ACCOUNTS PAYABLE
P O BOX 26885
RICHMOND VA 23261

REYNOLDS ALUMINUM CO
3900 PINSON VALLEY PARKWY
BIRMINGHAM AL 35217

Helen M. O'Connor
AUTHORIZED SIGNATURE

JESSOP T 304 STAINLESS HRAP
AMS 5511G ASTM A240-96a ASME SA-240-A97 ASTM A480-96
ASTM A262-93a PRACTICE E RASCO SPEC 04:C9:32 REV 1
WAIVE CLM

UCC QA TW APPROVED

Heat	Slip	Lot No	Size	Pcs	Weight
884810	71797 A	64007	.7500 x 96.0000 x 277.0000	1	5932
From slip 13190 REQ# 007Q01380 PART# 02657245					
885010	71134 A	63686	.3125 x 96.0000 x 280.0000	1	2566
From slip 13338 REQ# 007Q01380 PART# 02657245					
885063	71587 A	63478	.7500 x 96.0000 x 275.0000	1	5889
From slip 12033 REQ# 007Q01380 PART# 02657245					
885081	70961 A	70961	.7500 x 96.0000 x 272.0000	1	5825 — H233
From slip 13009 REQ# 007Q01380 PART# 02657245					

Heat	C	MN	P	S	SI	NI	CR	MO	CO	CU	N
884810	.020	1.72	.031	.0006	.33	8.23	18.23	.42	.15	.34	.095
885010	.025	1.73	.029	.0007	.28	8.23	18.33	.47	.16	.37	.085
885063	.022	1.70	.031	.0009	.48	8.29	18.31	.44	.14	.39	.089
885081	.025	1.70	.031	.0008	.31	8.22	18.27	.46	.15	.39	.08

Lot No	Gauge	Yield Strength	Tensile Strength	Elong	Red. of Area	Hardness	Bend	Corrosion	Grain Size
64007	.7500	42.2 KSI	89.4 KSI	57.0	78.0	BHN170		OK	
63686	.3125	49.5 KSI	88.2 KSI	54.0	78.0	B83-86	OK	OK	
63478	.7500	39.9 KSI	87.4 KSI	62.0	81.0	BHN179		OK	
70961	.7500	41.6 KSI	87.5 KSI	59.0	80.0	BHN179		OK	

MATERIAL WAS NOT WELDED
MATERIAL WAS PRODUCED WITHOUT KNOWN CONTACT WITH MERCURY OR LOW MELTING POINT CONTAMINANTS

EXCEPT AS OTHERWISE NOTED, THIS MATERIAL HAS BEEN MANUFACTURED AND TESTED IN ACCORDANCE WITH THE LISTED SPECIFICATIONS AND RESULTS CONFORM TO THE SPECIFICATION AND ORDER REQUIREMENTS

UNI-FORM COMPONENTS CO.

Tank Head Manufacturing Complex
16969 Old Beaumont Highway 90
Houston, TX 77049

(281) 456-9310
(800) 231-3272 toll-free
(281) 456-0245 fax

Packlist No.	Customer ID
PL-10514	DILBRO

MATERIAL CERTIFICATION

Customer PO No.	UCC Job No.	Date Cert. Originated
3030	55828	12/10/01

Sold To:
DILL BROTHERS INC
3401 20TH ST

ZION IL 60099

Ship To:
DILL BROTHERS INC
3401 20TH ST

ZION IL 60099

Ln	Order Qty	Ship Qty	B/O Qty	Part Description
1	36	36	0	HEAD F&D,19.29 OD X 3/4 SA 240-304

Unit of Measure: FA

H233	HEAT/SLAB:885801/70961A	GRADE:SA240-304	PLATE SIZE:.75 X 96 X 272	MILL:ALLEGHENY
H234	HEAT/SLAB:0X38/110X38 DB	GRADE:SA240-304	PLATE SIZE:.75 X 48 X 144	MILL:NORTH AMERICAN
H235	HEAT/SLAB:AEV6/11AEV6 BC	GRADE:SA240-304	PLATE SIZE:.75 X 60 X 144	MILL:NORTH AMERICAN
H236	HEAT/SLAB:T62832/E31798201	GRADE:SA240-304	PLATE SIZE:.75 X 96 X 240	MILL:DAEKYUNG
H237	HEAT/SLAB:T65602/E33190201	GRADE:SA240-304	PLATE SIZE:.75 X 72 X 240	MILL:DAEKYUNG
H238	HEAT/SLAB:806263/4A	GRADE:SA240-304	PLATE SIZE:.75 X 96 X 277	MILL:AVESTA
H239	HEAT/SLAB:807333/3A	GRADE:SA240-304	PLATE SIZE:.75 X 120 X 420	MILL:AVESTA

MILL TEST REPORTS ATTACHED

The chemical and physical properties as indicated on the attached report are the results of the Mill Tests of the raw material used in the manufacture of these products and are certified to meet only the minimum requirements of the ASME and/orASTM specifications for the material.

- [ ] We hereby certify that these heads were hot formed at the required normalizing temperature and air cooled, in accordance with all applicable specifications.
- [ ] We hereby certify that these heads were cold formed in compliance with the ASME Boiler and Pressure Vessel Code. Section VIII, Div.1 paragraph UCS-79(d).
- [x] We hereby certify that these heads were hot formed at 1950 degress F and air cooled in strict accordance with all applicable specifications.
- [x] We hereby certify that these heads comply with tolerances of UG-81 of ASME Section VIII, Div. 1.
- [ ] Other _____

WE HEREBY CERTIFY THAT THIS REPORT COVERING THE ABOVE AND ATTACHED INFORMATION IS TRUE AND CORRECT AS SHOWN AND CONTAINED IN OUR RECORDS.

Quality Control

Future Metals, Inc.

Certificate Of Tests / Packing List

Florida Division
5400 NW 35th Ave
Ft. Lauderdale, FL 33309
(954)739-5350

Shipper Number **FL78824** Date **8/7/02** Customer Name **DILL BROTHERS INC.**

Customer Order Number **3125**

Additional Customer Info

Description
SEAMLESS 304 STAINLESS STEEL TUBING

Specifications
ASTM A269-96

Manufacturer
ROCKWELL ALLOY CO., LTD. Melt Source

Size
3.50" OD X .120" WL Quantity **18'6"** Pieces Weight

Heat
971-864 Lot Grain Size

MECHANICAL PROPERTIES LIMITS

Ult Strength P.S.I.	Yield Point P.S.I.	Elongation Perc in 2	Hardness
94,250	42,050	54	HRB 66

CHEMICAL COMPOSITION LIMITS

C	Mn	P	S	Si	Cr	Ni	Mo	Cb+Ta	N	Ti	Cu
.06	.75	.039	.004	.35	18.49	8.80					

Tests Satisfactory
FLAT, HYDRO, CORROSION, FLARE.

CERTIFICATE OF CONFORMANCE

This certifies that material, parts, and/or assemblies covered by this report have been inspected and accepted to the applicable specifications in accordance with the requirements of the above Purchase Order. Results of all inspections, chemical and physical tests, as well as other evidence, which shows acceptability of raw materials, parts and/or assembly components are on file and available for inspection.

I Certify The Above Test Information To Be Correct As Contained In The Records Of The Company.

By Barbara Wiederhold
Quality Control Representative

Name **Barbara Wiederhold**

TRJ FL78824

* * * * * * * * Note * * * * * * * *

Fabrication of this product resulting in fumes, dust or solutions may be injurious to your health.

PACKAGING

Skid	Pieces	Bundles
Crush Pak	Boxes	Tubes

Future Metals, Inc.

Certificate Of Tests / Packing List

Florida Division
5400 NW 35th Ave
Ft. Lauderdale, FL 33309
(954)739-5350

Shipper Number **FL77838** Date **8/7/02** Customer Name **DILL BROTHERS INC.**

Customer Order Number **3078**

Additional Customer Info

Description
SEAMLESS 304 STAINLESS STEEL TUBING

Specifications
ASTM A269-96

Manufacturer
ROCKWELL ALLOY CO., LTD. Melt Source

Size
3.50" OD X .120" WL Quantity **37'1"** Pieces Weight

Heat
971-864 Lot Grain Size

MECHANICAL PROPERTIES LIMITS

Ult Strength P.S.I.	Yield Point P.S.I.	Elongation Perc in 2	Hardness
94,250	42,050	54	HRB 66

CHEMICAL COMPOSITION LIMITS

C	Mn	P	S	Si	Cr	Ni	Mo	Cb+Ta	N	Ti	Cu
.06	.75	.029	.004	.35	18.49	8.96					

Tests Satisfactory
FLAT, HYDRO, CORROSION, FLARE.

CERTIFICATE OF CONFORMANCE

This certifies that material, parts, and/or assemblies covered by this report have been inspected and accepted to the applicable specifications in accordance with the requirements of the above Purchase Order. Results of all inspections, chemical and physical tests, as well as other evidence, which shows acceptability of raw materials, parts and/or assembly components are on file and available for inspection.

I Certify The Above Test Information To Be Correct As Contained In The Records Of The Company.

By Barbara Wiederhold
Quality Control Representative

Name **Barbara Wiederhold**

TRS FL77838

* * * * * * * * Note * * * * * * * *

Fabrication of this product resulting in fumes, dust or solutions may be injurious to your health.

PACKAGING

Skid	Pieces	Bundles
Crush Pak	Boxes	Tubes

Future Metals, Inc.

Certificate Of Tests / Packing List

Florida Division
5400 NW 35th Ave
Ft. Lauderdale, FL 33309
(954)739-5350

Shipper Number: FL77838 Date: 8/7/02 Customer Name: DILL BROTHERS INC.

Customer Order Number: 3078

Additional Customer Info:

Description: SEAMLESS 304 STAINLESS STEEL TUBING

Specifications: ASTM A269-96

Manufacturer: STAINLESS KUZE CO., LTD. Melt Source:

Size: 3.50" OD X .065" WL Quantity: 100' Pieces: Weight:

Heat: E79389 Lot: Origin Site:

Mechanical Properties Limits

Ult Strength P.S.I.	Yield Point P.S.I.	Elongation Perc in 2	Hardness
84 ksi	36 ksi	64	HRB 70

Chemical Composition Limits

C	Mn	P	S	Si	Cr	Ni	Mo	Cb+Ta	N	Ti	Cu
.021	1.07	.028	.003	.49	18.31	9.12					

Tests Satisfactory

HYDRO, FLAT, FLARE.

Certificate Of Conformance

This certifies that material, parts, and/or assemblies covered by this report have been inspected and accepted to the applicable specifications in accordance with the requirements of the above Purchase Order. Results of all inspections, chemical and physical tests, as well as other evidence, which shows acceptability of raw materials, parts and/or assembly components are on file and available for inspection.

I Certify The Above Test Information To Be Correct As Contained In The Records Of The Company.

By Barbara Wiederhold
Quality Control Representative

Name Barbara Wiederhold

TR# FL77838-2

* * * * * * * * Note * * * * * * * *

Fabrication of this product resulting in fumes, dust or solutions may be injurious to your health.

Packaging

Skid	Pieces	Bundles
Cush Pak	Boxes	Tubes

Ryerson Number: 01 717316 01 01 001
Territory: 01
Load: OT
Item Number: 01

RYERSON TULL
Material Certification

To: DILL BROS INC

3401 - 20TH ST
ZION IL 60099

Attn: Julie

Your Order Number
3071

Order Date
11/13/2001

Item Description
STNLS 304/304L HR A/RT 5-1/2 RD x 4 FT 0

Single / Multiple Heat Number
70560

Slab / Coil Number (if applicable)

Item Instructions
CERTS ARE NOT REQUIRED

Part Number (if applicable) Item Mark Instruction (if applicable)

A survey of our material sources has indicated that neither mercury nor radioactive substances is introduced into their products, or is used in any of their processes. While we make no independent tests for mercury or radiation, there is nothing in Ryerson's system, which could be expected to introduce contamination of either type.

This document certifies that the material described above was shipped on your order and that the attached data is a true copy of the test report furnished by the producer with said material.

08/07/2002

Janice Belk
Authorized Agent of RYERSON TULL

Slater Steels Corporation

Fort Wayne Specialty Alloys Division
2400 Taylor Street West
Fort Wayne, Indiana 46802-4600
Telephone: (219)434-2892 Fax: (219)434-2905

Product Certification Report

Report Number: 2285790

Page 1 of 1

Slater Order I.D.	Order Date	Customer Order	Ship Date	Weight
0105027 001	6/04/01	712417	2/21/01	

Dim 1	Dim 2	Dim 3	Heat I.D.	Customer I.D.	Customer Purchase Order
5.5000	.0000	.0000	70560	001619	1 A 20163

Product Shape	Product Surface	Customer Grade
Rounds	HR. & Rough Turned(125 RMS)	304/304L

Ship To
JOSEPH T RYERSON & SON INC
16th and ROCKWELL STS
CHICAGO, IL
CENTER WAREHOUSE
60608

Sold To
JOSEPH T RYERSON & SON INC
ATTN: ACCOUNTS PAYABLE
MDSE DIV PO BOX 8000-A
CHICAGO, IL
60680

Lifts: 0085

CONDITION A
7125-U
ASTMA 479-00
ASTMA 262-98 Practice E

DUPONT SW300-M JAN 82
ASTMA 182-00b Chem Only
ASMESA182 98ED ChemOnly 2000AD
AMS 5639G

QQS 763 F
ASTMA 276-00a
ASMESA 479 98 ED 2000 ADD
AMS 5647G

CHEMICAL ANALYSIS

C	Mn	P	S	Si	Cr	Ni	Mo	Cu	Co	N	HB
.021	1.87	.024	.025	.39	18.09	8.38	.37	.32	.107	.075	185

TENSILE PROPERTIES

TS (PSI)	.2%YS (PSI)	%EL(2")	%RA
85400	37400	62.2	78.0

MACRO ASTM E340/E381

MACRO
OK
OK
OK

GRAIN SIZE ASTM E112

GRAIN SIZE
6

ASTM A 262 PRACTICE A

OXALIC
OK

Free of mercury and low melting alloy contamination.
Heated to 1900F min. and water quenched (heating time & temp appropriate for optimum quality).
We certify that the contents of this report are correct and that all operations performed by our company or
Title 18, Chapter 47.
This material was produced in accordance with Slater Quality System Manual, Rev. 7, dated 03/17/98
Tensile specimen size .505".
Hardness is mid-radius location unless otherwise stated.
Melted and manufactured in North America(NAFTA)
No welding or weld repair done,
Material conforms to listed specifications.

Results relate only to the items tested. Certification shall not be reproduced except in full, without the written approval of Slater Steels Corporation. The recording of false, fictitious, or fraudulent statements on this document may be punished as a felony under federal statutes, including Federal law, Title 18, Chapter 47. Consult material safety data sheet (MSDS) for hazard info.

I hereby certify that the reported figures are correct as contained in the records of the corporation.

Manager Laboratory Services

Dennis Hackett

Slater Steels Corporation

Fort Wayne Specialty Alloys Division
2400 Taylor Street West
Fort Wayne, Indiana 46802-4600
Telephone: (219)434-2892 Fax: (219)434-2905

Product Certification Report

Report Number: **2285790**

Page 2 of 1

Slater Order I.D.	Order Date	Commodity Code				Mill Code	Weight
0105027 001	6/04/01	712417				2/21/01	
Dim 1	Dim 2	Dim 3	Item I.D.	Customer I.D.	Customer Purchase Order		
5.5000	.0000	.0000	70560	001619	1 A 20163		
Product Shape		Product Surface				Customer Grade	
Rounds		HR & Rough Turned(125 RMS)				304/304L	

Ship To
JOSEPH T RYERSON & SON INC
16th and ROCKWELL STS
CHICAGO, IL
CENTER WAREHOUSE
60608

Sold To
JOSEPH T RYERSON & SON INC
ATTN: ACCOUNTS PAYABLE
MDSE DIV PO BOX 8000-A
CHICAGO, IL
60680

Quality system is registered to ISO 9002.

Results relate only to the items tested. Certification shall not be reproduced except in full, without the written approval of Slater Steels Corporation. The recording of false, fictitious, or fraudulent statements on this document may be punished as a felony under federal statutes, including Federal law, Title 18, Chapter 47. Consult material safety data sheet (MSDS) for hazard info.

I hereby certify that the reported figures are correct as contained in the records of the corporation.

Manager Laboratory Services

Dennis Hackett

Ryerson Number: 01 749477 01 01 001
Territory: 01
Load: OT
Item Number: 01

RYERSON TULL
Material Certification

To: DILL BROS INC

3401 - 20TH ST
ZION IL 60099

Your Order Number
3095

Order Date
12/10/2001

Item Description
STNLS 304/304L HR A/RT 5-1/2 RD x 1 FT 0

Single / Multiple Heat Number
71632

Slab / Coil Number (if applicable)

Item Instructions
CERTS ARE NOT REQUIRED

Part Number (if applicable)

Item Mark Instruction (if applicable)

A survey of our material sources has indicated that neither mercury nor radioactive substances is introduced into their products, or is used in any of their processes. While we make no independent tests for mercury or radiation, there is nothing in Ryerson's system, which could be expected to introduce contamination of either type.

This document certifies that the material described above was shipped on your order and that the attached data is a true copy of the test report furnished by the producer with said material.

08/07/2002

Janice Bell
Authorized Agent of RYERSON TULL

Slater Steels Corporation
Fort Wayne Specialty Alloys Division
2400 Taylor Street West, P.O. Box 630
Fort Wayne, Indiana USA 46801
Phone: 219-434-3892 Fax: 219-434-2805
www.slatersteelsinless.com

Product Certification Report

Report Number: 2405510

Page 1 of 1

Sales Order I.D.	Order Date	Commodity Code	Ship Date	Weight
0109410 001	10/05/01	712417	8/15/01	

Dim 1	Dim 2	Dim 3	Heat I.D.	Customer I.D.	Customer Purchase Order
5.5000	.0000	.0000	71632	001619	1 A 32456

Product Shape	Product Surface	Customer Grade
Rounds	HR & Rough Turned	304/304L

Ship To
JOSEPH T RYERSON & SON INC
16th and ROCKWELL STS
CHICAGO, IL
CENTER WAREHOUSE
60608

Sold To
JOSEPH T RYERSON & SON INC
ATTN: ACCOUNTS PAYABLE
MDSE DIV PO BOX 8000-A
CHICAGO, IL
60680

Lifts: 0067

CONDITION A
7125-U
ASTMA 479-00
ASTMA 262-98 Practice E

DUPONT SW300-M JAN 82
ASTMA 182-00b Chem Only
ASMESA182 98ED ChemOnly 2000AD
AMS 5639G

QQS 763 F
ASTMA 276-00a
ASMESA 479 98 ED 2000 ADD
AMS 5647G

CHEMICAL ANALYSIS

C	Mn	P	S	Si	Cr	Ni	Mo	Cu	Co	N
.010	1.85	.025	.028	.41	18.08	8.63	.39	.32	.112	.077

HB
183

TENSILE PROPERTIES

TS (PSI)	.2%YS (PSI)	%EL(2")	%RA
85400	38500	61.4	79.1

MACRO ASTM E340/E381
MACRO
OK

GRAIN SIZE ASTM E112
GRAIN SIZE
7

ASTM A 262 PRAC E(A Utilized)
OXALIC
OK

Free of mercury and low melting alloy contamination.
Heated to 1900F min. and water quenched (heating time & temp appropriate for optimum quality).
We certify that the contents of this report are correct and that all operations performed by our company or
Title 18, Chapter 47.
This material was produced in accordance with Slater Quality System Manual, Rev. 7, dated 03/17/98
Tensile specimen size .505".
Hardness is mid-radius location unless otherwise stated.
Melted and manufactured in North America(NAFTA)
No welding or weld repair done.
Material conforms to listed specifications.
Quality system is registered to ISO 9002.

Results relate only to the items tested. Certification shall not be reproduced except in full, without the written approval of Slater Steels Corporation. The recording of false, fictitious, or fraudulent statements on this document may be punished as a felony under federal statutes, including Federal law, Title 18, Chapter 47. Consult material safety data sheet (MSDS) for hazard info.
I hereby certify that the reported figures are correct as contained in the records of the corporation.

Manager Laboratory Services

Dennis Hackett

Mar 14, 2002
7:09:36

MATERIAL CERTIFICATE

No. 200204588

Sandvik Steel Company
P.O. Box 1220, Scranton, PA 18501 PH. (570) 585-7500
Plant Location: 982 Griffin Pond Road, Clarks Summit, PA 18411

Sold To: MARMON/KEYSTONE CORP. (60) BOLingbrook IL
Ship To: MARMON/KEYSTONE CORP. (60) BOLINGBROOK IL
Customer Order No: 6023253
Certification Date: 20020213
Sandvik Order No: 45946/1
Work Order/Lot: 23604

ASTM A511-96 S1 + S2 SANMAC, AMS 5639G (Chemistry only)

Hot Finished Process Annealed Seamless Tube
Type MT 304/MT 304L (SANMAC)
Size: 3.750" X .188"
Heat: 454663

ANALYSIS %

	C	Si	Mn	P	S	Cr	Ni
Heat	.012	.40	1.15	.028	.023	18.33	9.10
Prod	.009	.38	1.14	.027	.021	18.37	9.07

	Mo	Cu
Heat	.42	.29
Prod	.41	.29

Mechanical Tests:

Yield Strength 0.2%		Yield Strength 1.0%		Tensile Strength		Elongation in %				Reduction Of Area
psi	MPa	psi	MPa	psi	MPa	E2"	E10"	E4d	E5d	%
36550	252.1	N/A		84560	583.2	51	N/A	N/A	N/A	N/A

Hardness Test Results: 72HRB, 73HRB, 75HRB, 75HRB

Tensile Test sample width (1=Full-Size 2=1/2" Strip): 2
Country Of Origin: Sweden
All material subjected to a final solution annealing heat treatment with material at a temperature of 1900 deg.F. minimum followed by rapid quenching.
The material has not come in contact with Mercury or Mercury containing compounds.
No welding has been performed on this material.
Material has been manufactured/supplied in accordance with Sandvik Steel Company Quality Manual-Standard Products Revision 2 dated November 14, 2001. Quality system has been approved to ISO-9002/ANSI/ASQC Q9002-1994.
Certificate produced in accordance with EN 10204 (DIN 50049) 3.1.B.
This is to certify that the contents of this certificate are correct and accurate as contained in Sandvik's records, and that all above test results and operations performed are in compliance with the requirements of the purchase order.

Vita M. Cater
Authorized Representative

Tim Randall, QA Specialist
10 (STKMT304/304LS R2) (10) (BAZ)

QC REVIEWED

Matl certs for end plates P1/P2, Marsha 11/27/00

MAIL STATION 316

UNIVERSITIES RESEARCH ASSOCIATION INC.
FERMI NATIONAL ACCELERATOR LABORATORY
P.O. BOX 500 BATAVIA, ILLINOIS 60510
AREA CODE 630 840-3000

COPY

IMPORTANT
PLEASE PUT THE ORDER NUMBER ON ALL INVOICES, SHIPPING NOTICES, CORRESPONDENCE AND THE EXTERIOR OF ALL SHIPPING CONTAINERS.

PURCHASE ORDER

NO. 527585
Revision: 2
Date: 17-MAR-00
Page: 1 of 2

WALCO TOOL & ENG CORP
RR3
BOX 220 B
LOCKPORT, IL 60441
United States

SHIP TO
FERMILAB
INDUSTRIAL BUILDING #4
KIRK RD & WILSON STREET

BILL
FERMILAB
ACCOUNTS PAYABLE
PO BOX 500
AVIA, IL 60510
ed States

Material certs were required with this order. Please comply ASAP. Paul 11/17/00 (630) 840 2560

ORDER DATE	BUYER	TERMS: FROM RECEIPT OF GOODS OR INVOICE, WHICHEVER IS LATER	F.O.B.	INVESTOR
25-JAN-00	P OLDERR	NET 30	Destination	SCHMIDT, MARSHA E.

ITEM	DESCRIPTION							EXTENDED PRICE
	This is a Task Order. Purchase order number and contract agreement number must appear on all paperwork. Your Task Order contract agreement purchase order number is, 513822. Vendor to fabricate complete as shown below.							
	Vendor may substitute 304L for specified 304LN. Material certifications are required with shipment. Associated specification #ES-107220 applies.							
	Reason for change order #1; #ME-369573 now becomes rev "A". Reason for change order #2, Added p/n ME-369660, 1 pc.							
	CONFIRMATION -- DO NOT DUPLICATE							
1	ME-369572, rev "none", LE Plate This PO line references contract PO#: 513822		03-APR-00	2.00	EACH		1962	$3,924.00
2	ME-369573, rev "none", RE Plate This PO line references contract PO#: 513822			1.00	EACH		0	$0.00
		0.00 EACH	03-APR-00					

5210-1
-2

THIS PURCHASE IS EXEMPT FROM ILLINOIS RETAILERS OCCUPATION TAX UNDER TAX IDENTIFICATION NUMBER E9998-4987-03.

VENDOR INSTRUCTIONS

MATERIALS, SUPPLIES, OR SERVICES COVERED BY THIS ORDER ARE FOR WORK DONE UNDER PRIME CONTRACT DE-AC02-76CH03000 WITH THE UNITED STATES DEPARTMENT OF ENERGY (DOE) AND TITLE TO SUCH MATERIAL, SUPPLIES AND SERVICES SHALL PASS DIRECTLY FROM SELLER TO THE U.S GOVERNMENT. TERMS AND CONDITIONS REFERENCED ABOVE SHOULD CONSTITUTE PART OF THIS ORDER.

Rev: Apr 12, 1997

11/17/00 FRI 15:30 FAX 630 840 8022 ICB +++ WALCO 001

5210

Castle Metals

TEST REPORT ATTACHMENT

DATE	CUSTOMER ORDER #	INVOICE NO.
02/07/2000	37353	829036

LINE	QUANTITY	SIZE-DESCRIPTION AND SPECIFICATION-GRADE	HEAT NUMBER
1	4PCS	1-1/2 PLATE 304/304L HR AP STNLS	E76287

RECEIVED
FEB 9 2000
WALCO TOOL

A.M. CASTLE & CO. certifies that the material shipped is represented by values reported on the attached Mill Test Report.

WALCO TOOL & ENG CORP
18954 AIRPORT ROAD
LOCKPORT, IL. 60441-95

AUTHORIZED AGENT

TEST REPORT CLERK

COPY

AS PER CONTRACT/PO/T.T/LC CUSTOMER'S INSPECTION

宛先:

注文者
SHIPPER : NIKKO BOEKI KAISHA, LTD.
注文者問合番号
REFERENCE No. : TJB62 TJB62174
契約番号
CONTRACT No. : 9-868-TH-5-6-BH59
品名
COMMODITY : HOT ROLLED STAINLESS STEEL PLATES
規格
SPECIFICATION : ASTM A240-97A/ASME SA240-98ED TP304/304L DC NO.1
文書番号
DOCUMENT No. :

新日本製鐵株式會社
NIPPON STEEL CORPORATION
鋼材検査証明書
INSPECTION CERTIFICATE

本社 〒100-8071 東京都千代田区大手町二丁目6番3号
HEAD OFFICE : 2-6-3, OTEMACHI, CHIYODA-KU, TOKYO, 100-8071, JAPAN
八幡製鐵所 : 〒804-0001 北九州市戸畑区飛幡町1番1号
YAWATA WORKS : 1-1, TOBIHATA-CHO, TOBATA-KU, KITAKYUSHU-CITY, 804-0001, JAPAN

証明書番号 CERTIFICATE No. : 853
頁 PAGE : 1
発行年月日 DATE OF ISSUE : 1999-08-12

需要者 CUSTOMER :
需要家管理番号 CUSTOMERS CONTROL No. : E0/ 2 Z41 8

寸法 DIMENSION MM	数量 QUANTITY	質量 MASS LBS KG	鋳造番号 CASTNo. / 試験番号 TESTNo.	製品番号 PLATE No.	引張試験 TENSILE TEST 0.2% KSI	引張試験 TENSILE TEST TS KSI	伸び EL %	衝撃試験 IMPACT TEST 平均 AVG	衝撃試験 IMPACT TEST 最小値 EACH	HBH 10/1500	C	Si	Mn	P	S	Cu	Ni	Cr	Mo	Nb	V	N	備考
				SPEC. MIN.	30	75	400																
				MAX.		100				192	30	75	200	40	30	75	8001600 10502000		75				
				MAX.										10									
01-73757 1-1/2"X96"X240"	07 1		E76287 32352	200046-01	TCH 35	82	700			142	19	40	87	30 4	429		9141	1815	19				
01-73757 1-1/2"X96"X240"	07 1		E76287 32352	200047-01	TCH 35	82	700			142	19	40	87	30 4	429		9141	1815	19				
TOTAL	2	20040 9099																					

SOLUTION HEAT TREATMENT.....1040DC X 12MIN. WATER COOLED
CORROSION TEST (ASTM A262 PRACTICE-E) : ACCEPTABLE
VISUAL & DIMENSIONAL INSPECTION : ACCEPTABLE
NO WELD REPAIR /FREE OF MERCURY CONTAMINATION
S30403-62 REV.5,AMS5511F/AMS5513F,UNS NO.S30400/S30403,

注記 NOTE 注1 Location-Orientation 位置・方向 T: 頂部 Top. B: 底部 Bottom. L: 圧延方向 Longitudinal. C: 直角方向 Transverse. Z: 板厚方向 Through Thickness. K: 45°方向 45Deg. to the Longitudinal Axis
注2 G.L 標点距離 Gage Length. A: 50mm 平形試験片 Rectangular. B: 50mm 丸形試験片 Round. C: 70mm 平形試験片 Rectangular. D: 70mm 丸形試験片 Round. E: 80mm 平形試験片 Rectangular. F: 80mm 丸形試験片 Round. G: 200mm. H: 2", I: 8", J: 8.85 √So
注3 Z: 絞り Reduction of Area. Y: 降伏比 Yield Ratio 注4 A: 合格 Acceptable 注5 2: 2.0mm. 3: 3.2mm. 4: 3.25mm. 5: 5.0mm. 6: 6.07mm. 7: 7.5mm. 8: 10.7mm. 9: 製品板厚 Plate Thickness 注6 P: 製品分析 Product Analysis
注7 N: 焼準 Normalized. Q: 焼入れ Quenched. T: 焼戻し Tempered. CR: Controlled Rolled. NIC: NIC Process. CLC: CLC Process
SH: 剪断破面率 Shear Fracture. CF: 脆性破面率 Crystallinity Fracture. LE: 横膨出 Lateral Expansion. AGS: オーステナイト粒度 Austenite Grain Size. FGS: フェライト粒度 Ferrite Grain Size. SR: Stress Relieved /Post Weld Heat Treatment

300

上記注文品は御指定の規格または仕様に従って製造され、その要求事項を満足していることを証明します。

WE HEREBY CERTIFY THAT THE MATERIAL DESCRIBED HEREIN HAS BEEN MADE IN ACCORDANCE WITH THE RULES OF THE CONTRACT.

CASTLE METALS - F.P.
DATE REC'D 12/99 INV. 12478
APPROVED BY RD 28697

M. Umeno
八幡製鐵所ステンレス厚板工場
技術・管理グループリーダー
MANAGER, INSPECTION
YAWATA WORKS

G.E. MATHIS COMPANY
6100 S. OAK PARK AVE.
CHICAGO, IL. 60638

773-586-3800 773-586-0070 (FAX)

FAX TRANSMITTAL FORM

PLEASE DELIVER THE FOLLOWING:

Linda

TO: BOB JOHNSON

FROM: PATTY (EXT. #114)

DATE: 11/17/00

NUMBER OF PAGES (INCLUDING TRANSMITTAL FORM) : 5

IF ALL PAGES ARE NOT RECEIVED, PLEASE CALL 773-586-3800 AND CONTACT THE ORIGINATOR SHOWN ABOVE. THANK YOU.

COMMENTS:

c: Fred
we'll carry for
the skins.
Marsha
11/17/00

G. E. MATHIS COMPANY
6100 SOUTH OAK PARK AVE. CHICAGO IL. 60638
PHONE #773-586-3800 FAX #773-586-0070

REV. B
DATE: 6-97

CERTIFICATE OF COMPLIANCE

WE CERTIFY THE FOLLOWING PARTS HAVE BEEN CORRECTLY COMPLETED AND CONFORM TO THE REQUIREMENTS OF THE CONTRACTUAL AGREEMENT, DRAWINGS AND SPECIFICATIONS REFERENCED, AND THE PRACTICES OF THE G.E. MATHIS COMPANY QUALITY ASSURANCE MANUAL.

CUSTOMER: FERMI NATIONAL ACCELERATOR LAB. SWO #: 57233-1-1

PART #: 5520-MD-569585 REV: A REV. DATE: 6/5/00

P.O. #: TASK # 532033 QTY.: 12 SHIP DATE: 11/16/00

COMPLIES TO APPLICABLE SPECIFICATIONS:

MATERIAL: CONSIGNED BY FERMI LAB TO MATHIS 5/16" STAINLESS TYPE 304L PLATES, 60" X 260"
HEAT NUMBERS 10 pcs #TK45 & 2 pcs #RV18 EACH YIELDS TWO SEGMENTS
CERT. ATTACHED

PACKAGING: 2 CRATES WITH - (6) SEGMENTS PER CRATE - GOOD COMMERCIAL PRACTICE

WELDING: N/A

WELD PROCEDURE ATTACHED: N/A Q.C. REPORT ATTACHED: YES

COMMENTS: SOURCE INSPECTED BY FERMILAB 11/15/2000 *(REPORTS IN FERMI POSSESSION)*

G. E. MATHIS COMPANY

AUTHORIZED Q.A. SIGNATURE DATE: 11/16/00

DISTRIBUTION:

X G.E. MATHIS CO

____ INVOICE

____ SHIPPING

FILE: FORM 8519

G. E. MATHIS COMPANY
6100 SO. OAK PARK AVE.
CHICAGO IL. 60636
PH. 773-586-3800
FAX. 773-586-0070

PRODUCT INSPECTION REPORT

WORK ORDER: # 57233-1-1
DUE DATE: 1-8-01
CUSTOMER: FERMI
P. O. : # 532033

PART NO. 5520-MD-369585	REV.	OTHER	PAGE OF

LOT QTY. 34	ACCEPT QTY.	REJECT QTY.	AQL

INSPECTION DATE:

COMMENTS: 12 PCS PARTIAL ON 11/17/00

REQUIRE CHARACTERISTIC	ACTUAL INSPECTION RESULTS # 1	# 2	# 3	# 4	#
252.75 DA	252.75	252.75	252.75	252.75	
26.12	26.12	26.12	26.12	26.12	
26.12	26.12	26.12	26.12	26.12	
HT #	TK45	TK45	TK45	TK45	
200mm R (7.874")	CHECKED FOR TOOL			CHECKED FOR TOOL	

G.E. MATHIS CO. AUTHORIZED SIGNATURE: [signature] DATE: 11/15/00
CUSTOMER SIGNATURE (WHEN REQUIRED): DATE:

REV. B DATE: Jun-97 FORM 8509-2

NAS NORTH AMERICAN STAINLESS

METALLURGICAL TEST REPORT

6870 Highway 42 East
Ghent, KY 41045-9615
(502) 347-6000

Certificate: 106627 01
Customer: 0007 006

Mail To:
JOSEPH T. RYERSON/CENTRAL
TEST REPORTS DEPARTMENT
710 EAST 111TH STREET
CHICAGO, IL 60690

Ship To:
JOSEPH T. RYERSON/CENTRAL
710 EAST 111TH STREET
CHICAGO, IL 60690

Date: 7/14/2000 Page: 1
Steel: 304L
Finish: HRAP
Corrosion: ASTM A262/98 PRAC E

Your Order: 33A20930 NAS Order: MN 0161456 01

PRODUCT DESCRIPTION:

STAINLESS STEEL COIL, HOT ROLLED, ANNEALED AND PICKLED.
ASTMA240/99a,A480/99a,A666/99-A,ASMESA240/98,SA480/99,SA666/98-A
QQS766D-A X MO FERM,AMS5511G X MRK,MIL4043B,AMDJ,X CMTR MEAS

REMARKS:

Material free from mercury contamination. No weld repairs.
Minimum anneal temperature 1950 F

Product ID #	Coil #	Thickness	Width	Weight	Length	Mark	Pieces	COMMODITY CODE
11RV18 BB	11RV18 BB	.1125	60.0000	17,920 COIL	274.10	1	1	741112

CHEMICAL ANALYSIS

Heat	C	CR	CU	MN	MO	N	NI	P	S	SI
RV18	.026	18.096	.200	1.774	.343	.060	8.406	.032	.001	.395

MECHANICAL PROPERTIES

Product ID #	Coil #	Loc	Dir	UTS KSI	.2% YS KSI	ELONG %-2"	Hard RB	Hardness back	90 Ben lt
11RV18 BB	11RV18 B	F	T	86.54	49.15	52.76	85.00	82.50	OK

QC ENGINEER Daniel L. Wright 7/14/2000

NAS NORTH AMERICAN STAINLESS

METALLURGICAL TEST REPORT

6870 Highway 42 East
Ghent, KY 41045-9615
(502) 347-6000

Certificate: 108735 02
Customer: 0007 006

Mail To:
JOSEPH T. RYERSON/CENTRAL
TEST REPORTS DEPARTMENT
720 EAST 111TH STREET
CHICAGO, IL 60690

Ship To:
JOSEPH T. RYERSON/CENTRAL
720 EAST 111TH STREET
CHICAGO, IL 60690

Date: 8/16/2000 Page: 1
Steel: 304/304L
Finish: HRAP
Corrosion: ASTM A262/98 PRAC E

Your Order: 33A21031 NAS Order: AN 0141839 01

PRODUCT DESCRIPTION:

STAINLESS STEEL COIL, HOT ROLLED, ANNEALED AND PICKLED.
ASTMA240/99a,A480/99a,A666/99-A,ASMESA240/98,SA480/98,SA666/98-A
QQS766D-A X MGPAM,AMS5511G/AMS5513G XMRK,MIL4043B,AMD3,K CRNMEAS
RYERSON SPEC 7327-A 09/10/90
DUPONT SW300-M

REMARKS:

Material free from mercury contamination. No weld repairs.
Minimum anneal temperature 1950 F

Product ID #	Coil #	Thickness	Width	Weight	Length	Mark	Pieces	COMMODITY CODE
11TK45 B	* 11TK45 B	.3125	60.0000	21,980 COIL	343.50	1	1	741112

CHEMICAL ANALYSIS

Heat	C	CR	CU	MN	MO	N	NI	P	S	SI
TK45	.014	18.320	.320	1.570	.350	.064	8.240	.030	.001	.500

MECHANICAL PROPERTIES

Product ID #	Coil #	Loc	Dir	UTS KSI	.2% YS KSI	ELONG %-2"	Hard RB	90 Ben 1t
11TK45 B	11TK45	B	T	80.99	50.64	53.38	85.00	OK
11TK45 B	11TK45	F	T	86.73	49.03	54.20	82.50	OK

QC ENGINEER David L. Wright 8/16/2000

felguera
construcciones
mecánicas, s. a.

GRUPO df

CLIENTE: (CUSTOMER)	**FERMILAB**
EQUIPO: (EQUIPMENT)	**1 VACUM VESSEL TYPE -Q-2 (EQUIPMENT Nº 1)**
ORDEN DEL CLIENTE: ORDER CLIENT:	**537673**
FABRICANTE: (MANUFACTURE)	**FELGUERA CONSTRUCCIONES MECANICAS S.A.**
ORDEN DE FABRICACION: (JOB MANUFACTURE)	**69.083.00**

I N D I C E (INDEX)

1.- IDENTIFICACION DE MATERIALES **(MATERIALS IDENTIFICATION)**

2.- CERTIFICADOS DE MATERIALES **(MATERIALS CERTIFICATE)**

felguera construcciones mecánicas

Oficina Técnica

LISTA DE MATERIALES

Cliente: FERMILAB
Obra: 27 VACUUM VESSELS (9Q1 + 9Q2 + 9Q3)
ORDEN: 69.083.00

Rev	M.A.	Pos	Ctd	Designación	Material Norma	Material Calidad	Certificado EN10204	Peso (kg) Pieza	Peso (kg) Total	Cert. nº	Identificación HEAT Nº
	PLANO 390129			Q2 VACUUM VESSEL- CONJUNTO TO-ZB							
	21 23 26	1	2	FLANGE Brida Ø1009.6 x 30	AISI	304	3.1 B	33	66	1	29824
		2	2	ASSEMBLY FLANGE SLIDING Conjunto Brida deslizante						—	—
	1001 1002 1003	2A	8	LUG Orejetas	AISI	304	3.1 B	5,5	44	2	8824
	22 24 27	2B	2	SLIDING FLANGE Brida deslizante Ø 1055 x 24	AISI	304	3.1 B	35	70	3	29108
	7	3	2	TUBE Tubo Ø914 x 12.7 x 1446	EN 10208-2	L485MB	3.1 B	408,3	816,6	4	388834
		4	3	SUPPORT - ASSEMBLY Soporte-conjunto							
	2013 2014 2015	4A	6	PLATE-SUPPORT Chapa-soporte 35 x 1000 x 1100	ASTM A-6	A-36	3.1 B	102,2	613,2	5	3056463-1
	2009 2010 2011	4B	3	PLATE-BASE Chapa base 32 x 300 x 1000	ASTM A-6	A-36	3.1 B	75	225	6	93.6363
	2001 2002 2003	4C	6	GUIDE Guia	ASTM A-6	A-36	3.1 B	1,4	8,4	7	6859/99
	1005 1006 1007	4D	12	NOZZLE Tubuladura	AISI	304	3.1 B	1,4	16,8	8	28882
1	35 36 37	4E	12	FLANGE Brida 4 5/8" non-rotatable	AISI	304	3.1 B	0,39	4,68	9	00035
	20 2005 2006 2007	4F	3	BODY OF SUPPORT Cuerpo de soporte	EN 10028-2	P355NL2	3.1 B	435,5	1307	10	62363
	6	5	2	TUBE Tubo Ø914 x 12.7 x 4140	EN 10208-2	L485MB	3.1 B	1169	2338	4	388834
	1 3 31	6	64	SCREW Tornillo M12 x 50 DIN912	DIN267	1.4301	2.1	0,06	3,84	N.A.	—
	2 4 32	7	64	WASHER Arandela A13 DIN125	DIN267	1.4301	2.1	0,01	0,64	N.A.	—

OFICINA TECNICA
Fecha 12 OCT. 2001

CANTIDADES PARA 1 VACUUM VESSEL
SON 9 VACUUM VESSELS

EQUIPMENT Nº 1 TYPE "Q2"

Peso total = 5513,58 Kg.

Realizó:	Revisó:	Modificaciones		Fecha	Realizó	Revisó
Fecha: 24/08/01	Fecha: 24/08/01	1	Donde se indica	22/10/01		

MODELO 76.58

EUSKAL FORGING, S.A.
Poligono Ind. s/n - Teléf.943.69.14.12
Fax. 943.69.16.54
20270 IRURA (Guipúzcoa)
E. MAIL: tecnico@euskalforging.com

CERTIFICADO DE CALIDAD
Certificate / Werks - Abnahmezeugnis/
Certificat de fabrique - Work
EN 10204 3.1.B.

DOCS. 10.03 Rev. 3
Certificado: 2103271
Nr. 212048
del 6/11/01
vom-du-of

CLIENTE FELGUERA CONS. MECANICAS S.A.
Besteller - Client - Client

PEDIDO Nr 5032585
Bestell Nr. - Commande Nr. - Order Nr

MATERIAL A182 F304L (AISI 304)
Werksteff - Matériel - Material

NORMA ASTM - 01
Norm - Valeurs de demandées - Requeriments

1

TRATAMIENTO TERMICO SOLUTION ANNEALED
Wärmebehandlung - Traitement thermique - Heat traitement

ESTADO DE SUMINISTRO MACHINED
Lieferzustand - État de livraison - State of delivery

N. Pos Pos Nr. Poste N. Item No.	Número de piezas Stuckzahl Qté Number of pieces	Artículo - Gegenstand - Designation du produit - Article	N.° de colada Schmelze Nr. N. coulée Heat No.	N.° de probeta Probe Nr. N. d'approuvette Test. No.
0021	2	End flange according to drawing 6908300-1 rev. 0 Dimensions : 1015/915 x 40 Charge Order : 6908300 - 000	29824	

CERTIFICADO N.° 1

ENSAYOS MECANICOS - Ergebnis der Prüfungen - Résultats des Épreuves - Results of Tests

N° COLADA Guss Charg Heat	N° PROBETA Probe Nr. Éprouve Nr. Specimen Nr.	L. ELASTICO Denngrenze L. d'elasticité Yield stress al..... Rp, N/mm²	L. ELASTICO Streck-grenze Limite d'écoulement Yield stress Re, N/mm²	L. ROTURA Zuglestigkeit Résistance à la traction Tensile strength Rm, N/mm²	ALARGAMIENTO Dehnung Allongement Elongation A.....%	ESTRICCION Einschnürung Striction à la rupture Reduction of area Z.....%	RESILIENCIA Kerbschlag-arbeit Résilience Impact value Av...../.....	DUREZA Härte Dureté Hardness
VALORES REQUERIDOS Anforderungen - Valeurs demandées Values requested		0.2%			2"			HB
		MPa		MPa				
29824		303		563	62.7	71.2	- -	166

ANALISIS QUIMICO - Chemische Zusammensetzung . Analyse chimique - Chemical analysis

COLADA	C	Mn	Si	P	S	Ni	Cr	Mo	V	Ti	Nb	Al	Cu
29824	.019	1.73	.37	.026	.023	9.25	18.15						

NOTAS Bemerkungen Notes Notes: N. VALUE = .0865

A= 21

EUSKAL FORGING, S.A.		INSPECCION - SACHVERSTANDIGE - INSPECTEURS - INSPECTORS		
OPERADOR - Sachbearbeder Exécute par - Performer by	SUPERVISOR - Gegehmigt von Approuvé par - Approved by	CLIENTE - Besteller Client - Customer		
	EUSKAL FORGING, S.A. Aseguramiento Calidad			

EUSKAL FORGING, S.A.
Poligono Ind. s/n - Teléf.943.69.14.12
Fax. 943.69.16.54
20270 IRURA (Guipúzcoa)
E. MAIL: tecnico@euskalforging.com

CERTIFICADO DE CALIDAD

Work - Certificate/Werks - Abnahmezeugnis/
Certificat de fabrique

DOCS. 10.05 Rev. 3

Certificado: 2103271
Nr. 212048
del 6/11/01
vom-du-of

CLIENTE: FELGUERA CONS. MECANICAS S.A. (Client - Besteller - Client)	PEDIDO Nr 5032585 (Order Nr. - Bestell Nr. - Commande Nr.)
MATERIAL: A182 F304L (AISI 304) (Material - Werksteff - Matériel)	NORMA: ASTM - 01 (Requeriments - Norm - Valeurs de demandées)
TRATAMIENTO TERMICO: SOLUTION ANNEALED (Heat traitement - Wärmebehandlung - Traitement thermique)	ESTADO DE SUMINISTRO: MACHINED (State of delivery - Lieferzustand - État de livraison)

N. Pos Item No. Pos Nr. Poste N.	Número de piezas Number of pieces Stückzahl Qté	Artículo - Article - Gegenstand - Designation du produit	N.° de colada Heat No Schmelze Nr. N. coulée	N.° de probeta Test. No. Probe Nr. N. d'approuvette
0021	2	End flange according to drawing 6908300-1 rev. 0 Dimensions : 1015/915 x 40 Charge Order : 6908300 - 000	29824	

CERTIFICADO N.° 1

EXAMEN ULTRASONICO (Ultrasonic examination - Ultraschallprüfung - Examen par ultrasons)		EXAMEN MAGNETOSCOPICO (Magnetic examination - Magnetoskpische prüfung - Examen magnetoscopique)		
ESPECIFICACION (Specification - Spezifikation - Specification)	PROS.10.03 (SA-388-95)	ESPECIFICACION (Specification - Spezifikation - Specification)		
CRITERIO DE ACEPTACION (Acceptance criterion - Abnahmebedingung - Critère d'acceptation)	ASME VIII Div.2 Par.AM-203.2	CRITERIO DE ACEPTACION (Acceptance criterion - Abnahmebedingung - Critère d'acceptation)		
APARATO (Apparatus - Spezifikation - Specification)	KRAUTKRAMER USN-52	APARATO (Apparatus - Spezifikation - Specification)		
ESTADO DE LA SUPERFICIE (Test surface status - Oberflashzustand - État de surface)	MACHINED	ESTADO DE LA SUPERFICIE (Test surface status - Oberflashzustand - État de surface)		
PALPADOR (Probes - Prokopte - Palpeurs)	B 2 S-N	DISTANCIA ENTRE CONTACTOS (Distance between contacts - Abstand zwischen den contakten - Distance entre les contacts)		
DIMENSIONES (Sizes - Abmessungen - Dimensions)	0 24 mm.	CORRIENTE (Current - Strom - Courant)	ALTERNA / CONTINUA	POTENCIA A
FRECUENCIA (Frequency - Frequenz - Frequence)	2 MHz.	MAGNETIZACION (Magnetization method - Magnetisierungsverdharen - Méthode de magnétisation)		
CALIBRACION (Calibration - Kalibriefung - Calibration)	ECO DE FONDO	ILUMINACION (Lighting - Beleuchtung - Eclairage)	NATURAL / ARTIFICIAL LUZ NEGRA	
AMPLIFICACION (Amplification - Verkstarkung - Amplification)	+ 6 dB	PARTICULAS VIA (Particle method - Partikelverfahren Voie des particules)	HUMEDA / SECA	COLOR
ACOPLAMIENTO (Couplant - Kopplungsmethode - Couplant)	OIL	MARCA (Trade mak - Mark - Marque)		
RESULTADO (Results - Ergebnnisse - Résultats)	X ☐ CONFORME CON ESPECIFICACION (Acc. to spec. - Lauttspezifikation - Selon spécification) ☐ NO CONFORME CON ESPECIFICACION (Not Acc. to spec. -Nicht Laut spezifikation - Non cont. a la spec.) ☐ RECHAZADO (Rejection - Ausschluss - Rébut)	RESULTADO (Results - Ergebnnisse - Résultats)	☐ CONFORME CON ESPECIFICACION (Acc. to spec. - Lauttspezifikation - Selon spécification) ☐ NO CONFORME CON ESPECIFICACION (Not Acc. to spec. -Nicht Laut spezifikation - Non cont. a la spec.) ☐ RECHAZADO (Rejection - Ausschluss - Rébut)	

NOTAS (Notes-Bemerkungen-Notes)

EUSKAL FORGING, S.A.		INSPECCION - INSPECTORS - SACHVERSTANDIGE - INSPECTEURS		
OPERADOR - Performer by Sachbearbeder - Exécute par	SUPERVISOR - Approved by Gegehmigt von - Approuvé par	CLIENTE - Customer Besteller - Client		
	EUSKAL FORGING, S.A. Aseguramiento Calidad			
NIVEL Level - Grad - Niveau	NIVEL Level - Grad - Niveau			

ACERINOX, S.A.
FABRICA DEL CAMPO DE GIBRALTAR
"PALMONES (LOS BARRIOS)"
TFNO. (34) - 956 62 93 00
FAX (34) - 956 62 93 11
P.O. BOX 83
11370 LOS BARRIOS (CADIZ)

TÜV CERT ISO 9002

INSPECTION CERTIFICATE

CERTIFICADO DE INSPECCION

3.1.B

ACCORDING TO / SEGUN: EN 10204

CERTIFICATE N° / CERTIFICADO N°: 374383 03 7 / 1

CUSTOMER / CLIENTE
(METALINOX)INOXIDABLES EUSKADI
P.IND. APERRIBAI N 2 P. 6
GALDAKANO VIZCAYA ESPAÑA

OUR ORDER N° / N/PEDIDO: AN 32139 (2)

YOUR ORDER N° / S/PEDIDO: 176

REQUIREMENTS / NORMAS APLICABLES: ASTM-A-240/97;A-480/97;ASME-SA-240/98.

GRADE - MATERIAL: Acx 120 / TP-304

FINISH - ACABADO: Nro.1

TRADE MARK / SELLO DEL FABRICANTE: ACERINOX

INSPECTOR'S STAMP / SELLO DEL INSPECTOR

STEELMAKING PROCESS / PROCESO DE ACERIA: A.O.D.

COIL / BOX BOBINA/CAJA	CONTENT CONTENIDO	DIMENSIONS DIMENSIONES THICKNESS ESPESOR	WIDTH ANCHO	LENGTH LARGO	MARKS MARCA	QUANTITY N° PIEZAS	TEST N° PROBETA	
KE4657	038B24 BB	25,000	1.500,00	6.000,00	24	1	038B24	C

CHEMICAL ANALYSIS / COMPOSICION QUIMICA (%)

HEAT N° COLADA	C	CR	MN	N	NI	P	S	SI
REQUIREMENTS REQUISITOS	0,080	18,000 20,000	2,000	0,100	8,000 10,500	0,045	0,030	0,750
8B24	0,063	18,120	1,935	0,049	8,160	0,034	0,001	0,371

CERTIFICADO N.° 2

MECHANICAL PROPERTIES / CARACTERISTICAS MECANICAS

TEST N° PROBETA	PROBE SIT	PROBE TYPE	Rm. N/MM2	Rp 0.2 N/MM2	A50 %	HRB
REQUIREMENTS REQUISITOS			515,00	205,00	40,00	92,00
038B24	C	T	612,9	280,7	50,5	91,0

"COPIA FIDEDIGNA ESTE CERTIFICADO CORRESPONDE AL MATERIAL SUMINISTRADO CON NUESTRO ALBARAN Nº 25372 POSICION (ES) 5"

INTERGRANULAR CORROSION / CORROSION INTERGRANULAR: ASTM-A-262 PRACTICA E

SURFACE AND DIMENSIONAL CONTROL / INSPECCION SUPERFICIAL Y DIMENSIONAL: SATISFACTORY / Satisfactorio

COPIA

INDUSTRIAL METALÚRGICA CORÉS, S.L.

REMARKS / OBSERVACIONES

Temperatura de hipertemple entre 1050 y 1100 °C

INOXCENTER, S.A. Pol. Ind. Mora Garay-Cl. W.9 Parcela 1.24 Tels.: 985 32 57 62 985 32 57 66 33211 GIJON

O.C. 69.083.90 Ma = 2

O.C. 69.083.00 Ma = 1001 - 1002

WORK INSPECTOR / INSPECTOR: NIF.: B-33830803
33438 Logrezana - CARREÑO

J.A. Simón

Palmones, 5 JUNIO 2000

FOT0009 (Factoría)

F.C.M. Pedido: 5032793
Cargo: 69083.90

Gijón AES: 807-507

EUSKAL FORGING, S.A.
Poligono Ind. s/n - Teléf.943.69.14.12
Fax. 943.69.16.54
20270 IRURA (Guipúzcoa)
E. MAIL: tecnico@euskalforging.com

CERTIFICADO DE CALIDAD

Certificate / Werks - Abnahmezeugnis/
Certificat de fabrique - Work
EN 10204 3.1.B.

DOCS. 10.03 Rev. 3

Nr. Certificado: 2103272
del 212048
vom-du-of 23/10/01

CLIENTE (Besteller - Client - Client): FELGUERA CONS. MECANICAS S.A.	PEDIDO Nr (Bestell Nr. - Commande Nr. - Order Nr): 5032585
MATERIAL (Werkstoff - Matériel - Material): A182 F304L (AISI 304)	NORMA (Norm - Valeurs de demandées - Requeriments): ASTM - 01
TRATAMIENTO TERMICO (Wärmebehandlung - Traitement thermique - Heat traitement): SOLUTION ANNEALED	ESTADO DE SUMINISTRO (Lieferzustand - État de livraison - State of delivery): MACHINED

N. Pos / Pos Nr. / Poste N. / Item No.	Número de piezas / Stückzahl / Qté / Number of pieces	Artículo - Gegenstand - Designation du produit - Article	N.° de colada / Schmelze Nr. / N. coulée / Heat No.	N.° de probeta / Probe Nr. / N. d'approuvette / Test. No.
0022	2	Sliding flange according to drawing 6908300 - 2B rev. 0 Dimensions : 1055/928 x 29 Charge Order : 6908300 - 000	29108	

CERTIFICADO N.° 3

ENSAYOS MECANICOS - Ergebnis der Prüfungen - Résultats des Épreuves - Results of Tests

N° COLADA / Guss / Charg / Heat	N° PROBETA / Probe Nr. / Éprouve Nr. / Specimen Nr.	L. ELASTICO / Denngrenze / L. d'elasticité / Yield stress al..... Rp, N/mm²	L. ELASTICO / Streck-grenze / Limite d'écoulement / Yield stress Re, N/mm²	L. ROTURA / Zugfestigkeit / Résistance à la traction / Tensile strength Rm, N/mm²	ALARGAMIENTO / Dehnung / Allongement / Elongation A.....%	ESTRICCION / Einschnürung / Striction à la rupture / Reduction of area Z.....%	RESILIENCIA / Kerbschlag-arbeit / Résilience / Impact value Av...../.....	DUREZA / Härte / Dureté / Hardness
VALORES REQUERIDOS / Anforderungen - Valeurs demandées / Values requested		0.2%			2"			HB
29108		MPa 330		MPa 568	60.1	74.2	- -	166

ANALISIS QUIMICO - Chemische Zusammensetzung . Analyse chimique - Chemical analysis

COLADA	C	Mn	Si	P	S	Ni	Cr	Mo	V	Ti	Nb	Al	Cu
29108	.016	1.41	.32	.025	.001	8.50	18.15						

NOTAS / Bemerkungen / Notes / Notes

A: 22

N. VALUE = .083
ACCORDING TO ASTM E-45-97 Method A Class 2 FINE SIZE 0,5 ; GROSS SIZE = 0,5

EUSKAL FORGING, S.A.		INSPECCION - SACHVERSTANDIGE - INSPECTEURS - INSPECTORS		
OPERADOR - Sachbearbeder / Exécute par - Performer by	SUPERVISOR - Gegehmigt von / Approuvé par - Approved by	CLIENTE - Besteller / Client - Customer		
	EUSKAL FORGING, S.A. Aseguramiento Calidad			

EUSKAL FORGING, S.A.
Polígono Ind. s/n - Teléf.943.69.14.12
Fax. 943.69.16.54
20270 IRURA (Guipúzcoa)
E. MAIL: tecnico@euskalforging.com

CERTIFICADO DE CALIDAD

Work - Certificate/Werks - Abnahmezeugnis/
Certificat de fabrique

DOCS. 10.05 Rev. 3

Certificado: 2103272
Nr. 212048
del 23/10/01
vom-du-of

CLIENTE: FELGUERA CONS. MECANICAS S.A.
Client - Besteller - Client

PEDIDO Nr: 5032585
Order Nr. - Bestell Nr. - Commande Nr.

MATERIAL: A182 F304L (AISI 304)
Material - Werkstoff - Matériel

NORMA: ASTM - 01
Requeriments - Norm - Valeurs de demandées

TRATAMIENTO TERMICO: SOLUTION ANNEALED
Heat traitement - Wärmebehandlung - Traitement thermique

ESTADO DE SUMINISTRO: MACHINED
State of delivery - Lieferzustand - Etat de livraison

N. Pos Item No. Pos Nr. Poste N.	Número de piezas Number of pieces Stuckzahl Qté	Artículo - Article - Gegenstand - Designation du produit	N.° de colada Heat No Schmelze Nr. N. coulée	N.° de probeta Test. No. Probe Nr. N. d'approuvette
0022	2	Sliding flange according to drawing 6908300 - 2B rev. 0 Dimensions : 1055/928 x 29 Charge Order : 6908300 - 000	29108	

CERTIFICADO N.° 3

EXAMEN ULTRASONICO Ultrasonic examination - Ultraschallprüfung - Examen par ultrasons		EXAMEN MAGNETOSCOPICO Magnetic examination - Magnetoskpische prüfung - Examen magnetoscopique		
ESPECIFICACION Specification - Spezifikation - Specification	PROS.10.03 (SA-388-95)	ESPECIFICACION Specification - Spezifikation - Specification		
CRITERIO DE ACEPTACION Acceptance criterion - Abnahmebedingung - Critère d'acceptation	ASME VIII Div.2 Par.AM-203.2	CRITERIO DE ACEPTACION Acceptance criterion - Abnahmebedingung - Critère d'acceptation		
APARATO Apparatus - Spezifikation - Specification	KRAUTKRAMER USN-52	APARATO Apparatus - Spezifikation - Specification		
ESTADO DE LA SUPERFICIE Test surface status - Oberflashzustand - État de surface	MACHINED	ESTADO DE LA SUPERFICIE Test surface status - Oberflashzustand - État de surface		
PALPADOR Probes - Prokopte - Palpeurs	B 2 S-N	DISTANCIA ENTRE CONTACTOS Distance between contacts - Abstand zwischen den contakten - Distance entre les contacts		
DIMENSIONES Sizes - Abmessungen - Dimensions	0 24 mm.	CORRIENTE Courrent - Strom - Courant	ALTERNA CONTINUA	POTENCIA A
FRECUENCIA Frequency - Frequenz - Frequence	2 MHz.	MAGNETIZACION Magnetization method - Magnetisierungsverdharen - Méthode de magnetisation		
CALIBRACION Calibration - Kalibriefung - Calibration	ECO DE FONDO	ILUMINACION Lighting - Beleuchtung - Eclairage	NATURAL ARTIFICIAL LUZ NEGRA	
AMPLIFICACION Amplification - Verkstarkung - Amplification	+ 6 dB	PARTICULAS VIA Particle method - Partikelverfahren Voie des particules	HUMEDA SECA	COLOR
ACOPLAMIENTO Couplant - Kopplungsmethode - Couplant	OIL	MARCA Trade mak - Mark - Marque		
RESULTADO Results Ergebnisse Résultats	X CONFORME CON ESPECIFICACION Acc. to spec. - Lauttspezifikation - Selon spécification ☐ NO CONFORME CON ESPECIFICACION Not Acc. to spec. -Nicht Laut spezifikation - Non cont. a la spec. ☐ RECHAZADO Rejection - Ausschluss - Rébut	RESULTADO Results Ergebnisse Résultats	☐ CONFORME CON ESPECIFICACION Acc. to spec. - Lauttspezifikation - Selon spécification ☐ NO CONFORME CON ESPECIFICACION Not Acc. to spec. -Nicht Laut spezifikation - Non cont. a la spec. ☐ RECHAZADO Rejection - Ausschluss - Rébut	

NOTAS
Notes-Bemerkungen-Notes

EUSKAL FORGING, S.A.		INSPECCION - INSPECTORS - SACHVERSTANDIGE - INSPECTEURS		
OPERADOR - Performer by Sachbearbeder - Exécute par	SUPERVISOR - Approved by Gegehmigt von - Approuvé par	CLIENTE - Customer Besteller - Client		
	EUSKAL FORGING, S.A. Aseguramiento Calidad			
NIVEL Level - Grad - Niveau	NIVEL Level - Grad - Niveau			

EISEN- UND METALLWERKE FERNDORF GMBH

D-57202 KREUZTAL · POSTFACH 11 40

BENDER FERNDORF

GEGR. 1917

(4)

FELGUERA CONSTRUCCIONES
MECANICAS SA
APARTADO 206 – LA FELGUERA
CARRETERA LANGREO-OVIEDO, S/N
33930 BARROS / E
ESPAGNA

STAHLGROSSROHRE (LÄNGS- U. SPIRALGESCHWEISST) · FLANSCHE · SONDERMASCHINEN

IHR ZEICHEN	IHRE NACHRICHT VOM	UNSER ZEICHEN	DATUM
		QS/Kiel-rö	17.10.01

Your purchase order No. 5032566
Our job No. 21 186

CERTIFICADO N.º 4

Enclosed we send you

Test certificate acc. to EN 10 204/3.1 B

for the items delivered acc. to your a.m. order.

EISEN- UND METALLWERKE FERNDORF GMBH

- Quality Dept.--

(Kiel)

Enclosure

O.C. 69.083.00

Ac opies = 6 a 12

D-57223 KREUZTAL-FERNDORF · MÜHLENWEG 2-6
TELEFON +49(27 32) 5 52-0 · TELEFAX +49(27 32) 5 52-1 00
INTERNET: WWW.BENDER-FERNDORF.DE · E-MAIL: INFO@BENDER-FERNDORF.DE
GESCHÄFTSFÜHRER: DR. E. LOTHAR BENDER, H. CHRISTOPH BENDER
DR.-ING. SIEGFRIED THOMALLA
EINGETRAGEN UNTER HRB 3102 AG SIEGEN · UST-IDNR.: DE 811179178

LANDESZENTRALBANK SIEGEN (BLZ 460 000 00) 460 06 067
DEUTSCHE BANK AG SIEGEN (BLZ 460 700 90) 0 174 409
COMMERZBANK AG SIEGEN (BLZ 460 400 33) 8 703 365
DRESDNER BANK AG SIEGEN (BLZ 460 800 10) 3 530 681
STADTSPARKASSE KREUZTAL (BLZ 460 520 65) 2 009 751
POSTGIRO: DORTMUND (BLZ 440 100 46) 165 12-461

Abnahmeprüfzeugnis

Test certificate EN 10204/3.1B

Eisen und Metallwerke Ferndorf GmbH
Postfach 1140
57202 Kreuztal-Ferndorf
Telefon 02732/552-0 Fax 02732/552-100

Besteller: customer: FELGUERA CONSTRUCCIONES MECANICAS SA
33930 BARROS / E.

Bestell-Nr.: order-no.: 5032566

Werks-Kom-Nr.: works-order-no: 21186

Herstellerzeichen: manufacturer's mark:

Bedingungen: BENDER-FERNDORF STEEL PIPES, inside and outside submerged arc-spirally welded, technical term of delivery acc. to EN 10208-2, (but without internal pressure test) and acc. to Spec. 69083-4100 Rev. 0 (Charpy-V test acc. to EN 10045), but length tolerance - 0/ + 20 mm, Pipe ends cut square, pipes bare.

Umfang der Lieferung/Quantity to be delivered: Werkstoff / material: L 485 MB

	Pos item	Stück piece	Abmessungen mm à Ø mm o. Ø	Abmessungen Stärke wall thick. mm	Abmessungen Länge length mm	Prüfdruck testpressure Wasser water bar	Probe-Nr. sample-no.	Schmelze heat	*M/S	Rt 0.5 Streckgrenze yield point N/mm² 485 – 605	Zugfestigkeit tensile strength N/mm² ≥ 570	Dehnung elongation % ≥ 18	Kerbschlagzähigkeit J notch toughness Form/type ISO-V Lage/direction Q Temperatur 20°C/-50°C			Mittel Average	Zerstörungsfreie Prüfung nondestructive testing
A 6	1.1.	6	914	12	12470	-	867.1	388834	M	548	662	26.3	136	152	153	147	US-testing of the weld seams 100 % acc. to EN 10246-9/U2, without objection
										Rt 0.5/ Rm = 0.83							
7	1.2	2	914	12	13214	-			S		700	-	72	78	77	76	
									W				138	102	93	111	
8	1.3	3	914	12	10889	-			M	- 50° C			114	115	124	118	US-testing of the base material acc. to EN 10246-15/U2, without objection
									S	- 50° C			53	56	62	57	
9	1.4	6	914	12	11450	-			W	- 50° C			99	107	101	102	
10	1.5	1	914	12	9965	-	867.2	388824	M	549	658	25.2	147	191	192	177	X-ray-testing of the weld seam ends and repairs acc. to EN 10246-10, image class 1
										Rt 0.5/ Rm = 0.83							
11	1.6	1	914	12	7283				S	-	676	-	96	80	117	98	
									W				94	98	155	116	
12	1.7	1	914	12	9110	-			M	- 50° C			107	95	119	107	
									S	- 50° C			35	54	30	40	**Enclosure**
									W	-50°C			52	47	62	54	Base material certificate
																	Inspection record
																	Macrophoto
																	Hardness test report
																	Ultrasonic report
																	X-ray report

CERTIFICADO N.º 4

* M = Material, S = Schweiße/weld, W = wärmebeeinflußte Zone/heat affected zone

Das Ergebnis des Faltversuchs entspricht der Vorschrift!
Bending test specimen according to the specification.

Besichtigung und Ausmessung ohne Beanstandung.
Inspection and measurement without objection.

Es wird bestätigt, daß die Lieferung den Anforderungen der oben angeführten Lieferbedingungen entspricht.
The delivery corresponds to the requirements mentioned above.

Kreuztal-Ferndorf, den 09.10.01

Abnahme
Der Werks-Sachverständige
The Works Expert

(H.D. Kiel)

A= 6 a 12 69,083,00

BENDER FERNDORF

Abnahmeprüfzeugnis
Test certificate EN 10204/3.1 B

Werks-Kom.-Nr.: 21 186
job number:

Werkstoff: L 485 MB
material:

Chemische Zusammensetzung
Chemical composition

Schmelze heat	C %	Si %	Mn %	P %	S %	Al %	Nb %	Ti %	V %			CEV
388834	0.09	0.39	1.61	0.014	0.001	0.031	0.061		0.087			0.39
388824	0.09	0.40	1.65	0.014	0.000	0.034	0.061		0.087			0.39

CERTIFICADO N.º 4

Stückanalyse
Product analysis

Schmelze heat	C %	Si %	Mn %	P %	S %	Al %	Nb %	Ti %	V %			CEV
388834	0.08	0.40	1.53	0.019	0.002	0.033	0.046	<0.01	0.062			0.38
388824	0.08	0.37	1.54	0.018	0.002	0.031	0.050	<0.01	0.087			0.39

Abnahme

Der Werks-Sachverständige
The Works Expert

Kreuztal-Ferndorf, 09/10/01

(Kiel)

Eisen - und Metallwerke Ferndorf GmbH
D-57202 Kreuztal, Postfach 1140

Abnahmebericht
inspection record

Bestell-Nr.: 5032566
order-No.:

Werks-Kom.-Nr.: 021186
works-Order-No.:

Pos.-Nr.: 001
item-No.:

Rohre: 914,00 x 12,00 x 12470
pipes:

Toleranzen: mm

Minimum	Diameter:	912,40	Diameter:	912,40	Rundheit:	909,43	Länge:	0	Dicke: 11,50
Maximum	pipe body:	915,60	pipe ends:	915,60	roundness:	918,57	length:	0	thickness: 12,50

Rohr pipe-no.	mm AD 1 mm OD 1	mm AD 2 mm OD 2	Rundheit 1 roundness 1		Rundheit 2 roundness 2		Wanddicke wall thickness	Länge length	Schmelze heat		Proben-Nr. sample-no.
0001	914,30	914,40	914,00	914,00	914,00	914,00	11,80	12479	388834		
0002	914,40	914,30	914,00	914,00	914,00	915,00	11,70	12480	388834		
0003	914,30	914,20	914,00	914,00	914,00	915,00	11,80	12480	388834		
0004	914,40	914,40	914,00	914,00	914,00	913,00	11,80	12482	388834		
0005	914,30	914,40	914,00	914,00	913,00	914,00	11,80	12479	388834		
0006	914,30	914,40	913,00	914,00	914,00	914,00	11,80	12476	388834		867/1
0007	914,40	914,30	913,00	914,00	914,00	914,00	11,80	13228	388834		
0008	914,40	914,30	913,00	914,00	913,00	914,00	11,80	13230	388834		
0009	914,40	914,30	913,00	914,00	914,00	914,00	11,80	10902	388824		
0010	914,40	914,40	914,00	914,00	914,00	915,00	11,80	10902	388824		867/2
0011	914,40	914,30	913,00	914,00	914,00	914,00	11,80	10900	388824		
0012	914,40	914,50	914,00	915,00	915,00	915,00	11,80	11457	388834		
0013	914,50	914,50	914,00	914,00	913,00	915,00	11,80	11467	388834		
0014	914,40	914,50	914,00	914,00	913,00	915,00	11,80	11459	388834		
0015	914,40	914,30	914,00	915,00	914,00	915,00	11,80	11458	388834		
0016	914,40	914,40	914,00	914,00	914,00	915,00	11,80	11465	388824		
0017	914,40	914,50	914,00	914,00	914,00	914,00	11,80	11466	388834	388824	
0018	914,40	914,50	914,00	914,00	914,00	915,00	11,90	9965	388824		
0019	914,40	914,50	913,00	914,00	914,00	914,00	11,80	7303	388824		
0020	914,40	914,50	914,00	915,00	914,00	915,00	11,80	9128	388824		
							Summe:	229206			

CERTIFICADO N.º 4

QUALITY ASSURANCE
Geprüft
APPROVED

CERTIFICATE
NR.(NO.): 009600203001 DUISBURG-HAMBORN

ThyssenKrupp Stahl
Ein Unternehmen von ThyssenKrupp Steel

DISPO-NR.	Werks-Nr. / Works-No. / No de l'usine	Bestell-Nr. / Order-No. / No de commande	
*********		.	1 12.10.01
00478	29.05601	131/74372282.24229	☎ 02035225591
			🖷 02035224223

ThyssenKrupp Stahl · 47161 Duisburg

THYSSEN SCHULTE GMBH

POSTFACH 210842
D 57032 SIEGEN

BESCHEINIGUNG ÜBER MATERIALPRÜFUNGEN EN 10204 2d
DOCUMENT ON MATERIALS TESTS EN 10204
DOCUMENT DE CONTROLE DES MATERIAUX EN 10204

INSPECTION CERTIFICATE 3.1 B

Blatt-Nr. / Page-No. / Page-No 1

Werkstoff ; Quality ; Matériau / Lieferbedingungen ; Specification ; Conditions de livraison

L 485 MB / DIN EN 10208

Kennzeichnung: / Marking: / Marque: MATERIAL, HEAT-NO., MANUFACTURING/SAMPLE-NO.

Zeichen des Lieferwerkes: / Supplier's mark: / Marque d'usine: THYSSEN ThyssenKrupp Stahl

INSPECTOR'S STAMP

TYPE OF PRODUCT

HOT ROLLED COILS

CERTIFICADO N.º 4

ITEM	HEAT NO.	SAMPLE NO.	BUNDLE	NUMBER PIECES	WEIGHT NET	WEIGHT GROSS
001	11,8 X 1600,0 [mm]					
					KG	KG
	388804	5430801	5430801	1	32,700	32,700
	388814	5430731	5430731	1	32,680	32,680
	388824	5430671	5430671	1	32,600	32,600
	388834	5430621 X	5430621	1	33,880	33,880
	388854	5430511	5430511	1	34,120	34,120
			*	5	165,980	165,980
			**	5	165,980	165,980

CHEMICAL COMPOSITION OF THE LADLE SAMPLES %

HEAT NR.	C	SI	MN	P	S	AL-G	NB
388804	,10	,38	1,60	,014	,000	,036	,061
388814	,10	,38	1,61	,014	,001	,034	,058
388824	,09	,40	1,65	,014	,000	,034	,061
388834	,09	,39	1,61	,014	,001	,031	,059
388854	,10	,37	1,60	,014	,000	,029	,057

Es wird bestätigt, dass die Ergebnisse der Prüfungen den vereinbarten Lieferbedingungen entsprechen.
This is to certify, that the test results are in agreement with the specifications.
Nous confirmons que les résultats des essais sont conformes aux conditions convenues de vente.

ZERTIFIZIERT nach ISO 9001 QS - 9000 VDA 6.1

CERTIFICATE
NR.(NO.): 009600203001 DUISBURG-HAMBORN

ThyssenKrupp Stahl
Ein Unternehmen von ThyssenKrupp Steel

DISPO-NR.	Werks-Nr. / Works-No. / No de l'usine	Bestell-Nr. / Order-No. / No de commande		
*********				12.10.01
00478	29.05601		131/74372282.24229	02035225591
				02035224223

ThyssenKrupp Stahl · 47161 Duisburg

THYSSEN SCHULTE GMBH

POSTFACH 210842
D 57032 SIEGEN

BESCHEINIGUNG ÜBER MATERIALPRÜFUNGEN EN 10204 2d
DOCUMENT ON MATERIALS TESTS EN 10204
DOCUMENT DE CONTROLE DES MATERIAUX EN 10204

INSPECTION CERTIFICATE 3.1 B

Blatt-Nr. / Page-No. / Page-No 2

Werkstoff ; Quality ; Matériau / Lieferbedingungen ; Specification ; Conditions de livraison

L 485 MB / DIN EN 10208

Kennzeichnung: / Marking: / Marque: MATERIAL, HEAT-NO., MANUFACTURING/SAMPLE-NO.

Zeichen des Lieferwerkes: / Supplier's mark: / Marque d'usine: THYSSEN ThyssenKrupp Stahl

	V
388804	,085
388814	,083
388824	,087
388834	,082
388854	,080

CERTIFICADO N.º 4

MECHANICAL CHARACTERISTICS T E N S I L E T E S T

HEAT-NO.	SAMPLE NO.	1)POSIT 2)STAT. 3)TYPE	TEST TEMP °C.	R N/mm²	RM N/mm²	R/RM %	L0 mm	A %	AGT %	RM X A
388804	543080	1)0129 2)0001 3)0002	+ 20	538 RT0,5	655	82	110	29		
388814	543073	1)0129 2)0001 3)0002	+ 20	528 RT0,5	661	80	110	27		
388824	543067	1)0129 2)0001 3)0002	+ 20	523 RT0,5	656	80	110	26		
388834	543060	1)0129 2)0001 3)0002	+ 20	545 RT0,5	671	81	110	26		
388854	543047	1)0129 2)0001 3)0002	+ 20	586 RT0,5	687	85	110	24		

Es wird bestätigt, dass die Ergebnisse der Prüfungen den vereinbarten Lieferbedingungen entsprechen.
This is to certify, that the test results are in agreement with the specifications.
Nous confirmons que les résultats des essais sont conformes aux conditions convenues de vente.

ZERTIFIZIERT nach ISO 9001 QS - 9000 VDA 6.1

CERTIFICATE
NR.(NO.): 009600203001 DUISBURG-HAMBORN

ThyssenKrupp Stahl
Ein Unternehmen von ThyssenKrupp Steel

DISPO-NR.	Werks-Nr. / Works-No. / No de l'usine	Bestell-Nr. / Order-No. / No de commande	
*********			12.10.01
00478	29.05601	131/74372282.24229	02035225591
			02035224223

ThyssenKrupp Stahl · 47161 Duisburg

THYSSEN SCHULTE GMBH

POSTFACH 210842
D 57032 SIEGEN

BESCHEINIGUNG ÜBER MATERIALPRÜFUNGEN EN 10204 2d
DOCUMENT ON MATERIALS TESTS EN 10204
DOCUMENT DE CONTROLE DES MATERIAUX EN 10204

INSPECTION CERTIFICATE 3.1 B

Blatt-Nr. / Page-No. / Page-No 3

Werkstoff ; Quality ; Matériau / Lieferbedingungen ; Specification ; Conditions de livraison

L 485 MB / DIN EN 10208

Kennzeichnung: / Marking: / Marque: MATERIAL, HEAT-NO., MANUFACTURING/SAMPLE-NO.

Zeichen des Lieferwerkes: / Supplier's mark: / Marque d'usine: THYSSEN ThyssenKrupp Stahl

CERTIFICADO N.º 4

MECHANICAL CHARACTERISTICS I M P A C T T E S T

HEAT-NO.	SAMPLE NO.	1) POSIT 2) STAT. 3) FORM	TEST-TEMP °C.	ENERGY 1	2	3	M
388804	543080	1)0129 2)0001 3)0007	+ 0	199,0	290,0	207,0	232,0
388814	543073	1)0129 2)0001 3)0007	+ 0	206,0	216,0	200,0	207,0
388824	543067	1)0129 2)0001 3)0007	+ 0	250,0	244,0	246,0	247,0
388834	543060	1)0129 2)0001 3)0007	+ 0	175,0	189,0	161,0	175,0
388854	543047	1)0129 2)0001 3)0007	+ 0	188,0	200,0	194,0	194,0

MECHANICAL CHARACTERISTICS B D T W - T E S T

HEAT-NO.	SAMPLE NO.	POSIT	STAT.	TEST-TEMP °C.	SHEAR-FACE KB1 %	ZB1 %	KB2 %	ZB2 %	ENERGY EA1	EA2
388804	543080	0129	0001	+ 0		100		100		
388814	543073	0129	0001	+ 0		100		100		

ThyssenKrupp Stahl
Abnahmetechnik

Es wird bestätigt, dass die Ergebnisse der Prüfungen den vereinbarten Lieferbedingungen entsprechen.
This is to certify, that the test results are in agreement with the specifications.
Nous confirmons que les résultats des essais sont conformes aux conditions convenues de vente.

ZERTIFIZIERT nach ISO 9001 QS - 9000 VDA 6.1

CERTIFICATE
NR.(NO.): 009600203001 DUISBURG-HAMBORN

ThyssenKrupp Stahl
Ein Unternehmen von ThyssenKrupp Steel

DISPO-NR.	Werks-Nr. / Works-No. / No de l'usine	Bestell-Nr. / Order-No. / No de commande	
*********		.	12.10.01
00478	29.05601	. 131/74372282.24229	02035225591
			02035224223

ThyssenKrupp Stahl · 47161 Duisburg

THYSSEN SCHULTE GMBH

POSTFACH 210842
D 57032 SIEGEN

BESCHEINIGUNG ÜBER MATERIALPRÜFUNGEN EN 10204 2d
DOCUMENT ON MATERIALS TESTS EN 10204
DOCUMENT DE CONTROLE DES MATERIAUX EN 10204

INSPECTION CERTIFICATE 3.1 B

Blatt-Nr. / Page-No. / Page-No 4

Werkstoff ; Quality ; Matériau / Lieferbedingungen ; Specification ; Conditions de livraison

L 485 MB / DIN EN 10208

Kennzeichnung: / Marking: / Marque: MATERIAL, HEAT-NO., MANUFACTURING/SAMPLE-NO.

Zeichen des Lieferwerkes: / Supplier's mark: / Marque d'usine: THYSSEN ThyssenKrupp Stahl

CERTIFICADO N.º 4

HEAT-NO.	SAMPLE NO.	POSIT	STAT.	TEST-TEMP °C.	KB1 %	ZB1 %	KB2 %	ZB2 %	ENERGY EA1	EA2
388824	543067	0129	0001	+ 0		100		100		
388834	543060	0129	0001	+ 0		100		100		
388854	543047	0129	0001	+ 0		100		100		

STAT.
0001=AS ROLLED

POSIT
01=TOP

TYPE TENSILE TEST
0002=FLAT TENSILE TEST

POSIT
29=DIAG. 29 DEGREES

TYPE IMPACT TEST
0007=CHARPY- V

THIS CERTIFICATE HAS BEEN ISSUED BY A QUALIFIED ELECTRONIC DATA SYSTEM AND IS VALID ACC. TO EN 10204,PARA.5 WITHOUT SIGNATURE.

QUALITY ASSURANCE Geprüft APPROVED

WORKS EXPERT : Wenzel / Sartoris

ThyssenKrupp Stahl
Abnahmetechnik

Es wird bestätigt, dass die Ergebnisse der Prüfungen den vereinbarten Lieferbedingungen entsprechen.
This is to certify, that the test results are in agreement with the specifications.
Nous confirmons que les résultats des essais sont conformes aux conditions convenues de vente.

ZERTIFIZIERT nach ISO 9001 QS - 9000 VDA 6.1

CERTIFICATE
NR.(NO.): 009600110003 DUISBURG-HAMBORN

ThyssenKrupp Stahl
Ein Unternehmen von ThyssenKrupp Steel

DISPO-NR.	Werks-Nr. / Works-No. / No de l'usine	Bestell-Nr. / Order-No. / No de commande	
*********	29.05601	131/74372282.24229	17.11.00 02035225591 02035224223

ThyssenKrupp Stahl - 47161 Duisburg

THYSSEN SCHULTE GMBH

POSTFACH 210842
D 57032 SIEGEN

BESCHEINIGUNG ÜBER MATERIALPRÜFUNGEN EN 10204 2d
DOCUMENT ON MATERIALS TESTS EN 10204
DOCUMENT DE CONTROLE DES MATERIAUX EN 10204

CERTIFICAT DE RECEPTION 3.1 B

Blatt-Nr. / Page-No. / Page-No 1

Werkstoff ; Quality ; Matériau / Lieferbedingungen ; Specification ; Conditions de livraison

L 485 MB / DIN EN 10208

Kennzeichnung: / Marking: / Marque: MATERIAL, HEAT-NO., MANUFACTURING/SAMPLE-NO.

Zeichen des Lieferwerkes: / Supplier's mark: / Marque d'usine: THYSSEN ThyssenKrupp Stahl

INSPECTOR'S STAMP

TYPE OF PRODUCT

CERTIFICADO N.º 4

WARMBREITBAND

ITEM	HEAT NO.	SAMPLE NO.	BUNDLE	NUMBER PIECES	WEIGHT NET	WEIGHT GROSS
001	11,8 X 1600,0 [mm]					
					KG	KG
	388784	543093	543093	1	33,300	33,300
	388784	543094	543094	1	32,960	32,960
	388794	543086	543086	1	32,120	32,120
	388794	543087	543087	1	34,020	34,020
	388794	543088	543088	1	34,220	34,220
	388794	543089	543089	1	34,400	34,400
	388804	543081	543081	1	34,080	34,080
	388804	543082	543082	1	33,920	33,920
	388804	543083	543083	1	33,860	33,860
	388804	543084	543084	1	34,220	34,220
	388814	543074	543074	1	33,900	33,900
	388814	543075	543075	1	33,620	33,620
	388814	543076	543076	1	34,980	34,980
	388814	543077	543077	1	34,040	34,040
	388814	543078	543078	1	34,120	34,120
	388814	543079	543079	1	33,860	33,860
	388824	543068	543068	1	34,080	34,080
	388824	543069	543069	1	34,240	34,240
	388824	543070	543070	1	32,060	32,060
	388824	543071	543071	1	34,080	34,080

ThyssenKrupp Stahl
Abnahmetechnik

Es wird bestätigt, dass die Ergebnisse der Prüfungen den vereinbarten Lieferbedingungen entsprechen.
This is to certify, that the test results are in agreement with the specifications.
Nous confirmons que les résultats des essais sont conformes aux conditions convenues de vente.

ZERTIFIZIERT nach ISO 9001 QS-9000 VDA 6.1

CERTIFICATE
NR.(NO.): 009600110003 DUISBURG-HAMBORN

ThyssenKrupp Stahl
Ein Unternehmen von ThyssenKrupp Steel

DISPO-NR.	Werks-Nr. / Works-No. / No de l'usine	Bestell-Nr. / Order-No. / No de commande	
*********	29.05601	131/74372282.24229	17.11.00 02035225591 02035224223

ThyssenKrupp Stahl · 47161 Duisburg

THYSSEN SCHULTE GMBH

POSTFACH 210842
D 57032 SIEGEN

BESCHEINIGUNG ÜBER MATERIALPRÜFUNGEN EN 10204 2d
DOCUMENT ON MATERIALS TESTS EN 10204
DOCUMENT DE CONTROLE DES MATERIAUX EN 10204

CERTIFICAT DE RECEPTION 3.1 B

Blatt-Nr. / Page-No. / Page-No 2

Werkstoff ; Quality ; Matériau / Lieferbedingungen ; Specification ; Conditions de livraison

L 485 MB / DIN EN 10208

Kennzeichnung: / Marking: / Marque: MATERIAL, HEAT-NO., MANUFACTURING/SAMPLE-NO.

Zeichen des Lieferwerkes: / Supplier's mark: / Marque d'usine: THYSSEN ThyssenKrupp Stahl

CERTIFICADO N.º 4

ITEM	HEAT NO.	SAMPLE NO.	BUNDLE	NUMBER PIECES	WEIGHT NET	WEIGHT GROSS
	388824	543072	543072	1	34,540	34,540
	388834	543063	543063	1	34,100	34,100
	388834	543064	543064	1	34,500	34,500
	388834	543065	543065	1	34,060	34,060
	388834	543066	543066	1	34,340	34,340
	388844	543053	543053	1	33,720	33,720
	388844	543054	543054	1	34,460	34,460
	388844	543055	543055	1	33,660	33,660
	388844	543056	543056	1	33,720	33,720
	388844	543059	543059	1	34,100	34,100
	388854	543048	543048	1	34,040	34,040
	388854	543049	543049	1	34,080	34,080
	388854	543050	543050	1	33,980	33,980
			*	33	1119,380	1119,380
			**	33	1119,380	1119,380

CHEMICAL COMPOSITION OF THE LADLE SAMPLES %

HEAT NR.	C	SI	MN	P	S	AL-G	CR
388784	,10	,38	1,63	,015	,000	,034	,022
388794	,10	,40	1,66	,015	,001	,038	,023
388804	,10	,38	1,60	,014	,000	,036	,028
388814	,10	,38	1,61	,014	,001	,034	,027
388824	,09	,40	1,65	,014	,000	,034	,026
388834	,09	,39	1,61	,014	,001	,031	,023
388844	,09	,39	1,63	,011	,001	,029	,023
388854	,10	,37	1,60	,014	,000	,029	,022

ThyssenKrupp Stahl
Abnahmetechnik

Es wird bestätigt, dass die Ergebnisse der Prüfungen den vereinbarten Lieferbedingungen entsprechen.
This is to certify, that the test results are in agreement with the specifications.
Nous confirmons que les résultats des essais sont conformes aux conditions convenues de vente.

ZERTIFIZIERT nach ISO 9001 QS 9000 VDA 6.1

CERTIFICATE
NR.(NO.): 009600110003 DUISBURG-HAMBORN

ThyssenKrupp Stahl
Ein Unternehmen von ThyssenKrupp Steel

DISPO-NR.	Werks-Nr. Works-No. No de l'usine	Bestell-Nr. Order-No. No de commande	
*********	29.05601	131/74372282.24229	17.11.00 02035225591 02035224223

ThyssenKrupp Stahl · 47161 Duisburg

THYSSEN SCHULTE GMBH

POSTFACH 210842
D 57032 SIEGEN

BESCHEINIGUNG ÜBER MATERIALPRÜFUNGEN EN 10204 2d
DOCUMENT ON MATERIALS TESTS EN 10204
DOCUMENT DE CONTROLE DES MATERIAUX EN 10204

CERTIFICAT DE RECEPTION 3.1 B

Blatt-Nr. Page-No. Page-No. 3

Werkstoff ; Quality ; Matériau / Lieferbedingungen ; Specification ; Conditions de livraison

L 485 MB / DIN EN 10208

Kennzeichnung: Marking: Marque: MATERIAL, HEAT-NO., MANUFACTURING/SAMPLE-NO.

Zeichen des Lieferwerkes: Supplier's mark: Marque d'usine: THYSSEN ThyssenKrupp Stahl

CERTIFICADO N.º 4

	CU	MO	NB	NI	V	CE1
388784	,018	,001	,057	,020	,085	,40
388794	,012	,001	,059	,018	,085	,40
388804	,021	,004	,061	,022	,085	,39
388814	,019	,003	,058	,022	,083	,39
388824	,013	,001	,061	,018	,087	,39
388834	,013	,003	,059	,019	,082	,38
388844	,014	,001	,057	,019	,084	,39
388854	,014	,004	,057	,021	,080	,39

CE1=C+MN/6+(CR+MO+V)/5+(NI+CU)/15

MECHANICAL CHARACTERISTICS T E N S I L E T E S T

HEAT-NO.	SAMPLE NO.	1)POSIT 2)STAT. 3)TYPE	TEST TEMP °C.	R N/mm²	RM N/mm²	R/RM %	L0 mm	A %	AGT %	RM X A
388784	543046	1)0129 2)0001 3)0003	+ 20	552 RT0,5	667	83	110	25		
388794	543085	1)0129 2)0001 3)0003	+ 20	547 RT0,5	669	82	110	26		
388804	543080	1)0129 2)0001 3)0003	+ 20	538 RT0,5	655	82	110	29		
388814	543073	1)0129 2)0001 3)0003	+ 20	528 RT0,5	661	80	110	27		

ThyssenKrupp Stahl
Abnahmetechnik

Es wird bestätigt, dass die Ergebnisse der Prüfungen den vereinbarten Lieferbedingungen entsprechen.
This is to certify, that the test results are in agreement with the specifications.
Nous confirmons que les résultats des essais sont conformes aux conditions convenues de vente.

ZERTIFIZIERT nach ISO 9001 QS 9000 VDA 6

CERTIFICATE
NR.(NO.): 009600110003 DUISBURG-HAMBORN

ThyssenKrupp Stahl
Ein Unternehmen von ThyssenKrupp Steel

DISPO-NR.	Werks-Nr. / Works-No. / No de l'usine	Bestell-Nr. / Order-No. / No de commande	
*********	29.05601	131/74372282.24229	17.11.00 02035225591 02035224223

ThyssenKrupp Stahl - 47161 Duisburg

THYSSEN SCHULTE GMBH

POSTFACH 210842
D 57032 SIEGEN

BESCHEINIGUNG ÜBER MATERIALPRÜFUNGEN EN 10204 2d
DOCUMENT ON MATERIALS TESTS EN 10204
DOCUMENT DE CONTROLE DES MATERIAUX EN 10204

CERTIFICAT DE RECEPTION 3.1 B

Blatt-Nr. / Page-No. / Page-No 4

Werkstoff ; Quality ; Matériau / Lieferbedingungen ; Specification ; Conditions de livraison

L 485 MB / DIN EN 10208

Kennzeichnung: / Marking: / Marque: MATERIAL, HEAT-NO., MANUFACTURING/SAMPLE-NO.

Zeichen des Lieferwerkes: / Supplier's mark / Marque d'usine: THYSSEN ThyssenKrupp Stahl

CERTIFICADO N.º 4

HEAT-NO.	SAMPLE NO.	1) POSIT 2) STAT. 3) TYPE	TEST TEMP °C.	R N/mm²	RM N/mm²	R/RM %	L0 mm	A %	AGT %	RM X A
388824	543067	1)0129 2)0001 3)0003	+ 20	523 RT0,5	656	80	110	26		
388834	543060	1)0129 2)0001 3)0003	+ 20	545 RT0,5	671	81	110	26		
388844	543052	1)0129 2)0001 3)0003	+ 20	565 RT0,5	668	85	110	23		
388854	543047	1)0129 2)0001 3)0003	+ 20	586 RT0,5	687	85	110	24		

MECHANICAL CHARACTERISTICS I M P A C T T E S T

HEAT-NO.	SAMPLE NO.	1) POSIT 2) STAT. 3) FORM	TEST-TEMP °C.	ENERGY 1	2	3	M
388784	543046	1)0129 2)0001 3)0007	+ 0	250,0	256,0	254,0	253,0
388794	543085	1)0129 2)0001 3)0007	+ 0	219,0	229,0	204,0	217,0

ThyssenKrupp Stahl
Abnahmetechnik

Es wird bestätigt, dass die Ergebnisse der Prüfungen den vereinbarten Lieferbedingungen entsprechen.
This is to certify, that the test results are in agreement with the specifications.
Nous confirmons que les résultats des essais sont conformes aux conditions convenues de vente.

ZERTIFIZIERT nach ISO 9001 QS 9000 VDA 6.1

CERTIFICATE
NR.(NO.): 009600110003 DUISBURG-HAMBORN

ThyssenKrupp Stahl
Ein Unternehmen von ThyssenKrupp Steel

DISPO-NR.	Werks-Nr. Works-No. No de l'usine	Bestell-Nr. Order-No. No de commande	
*********	29.05601	131/74372282.24229	17.11.00 02035225591 02035224223

ThyssenKrupp Stahl · 47161 Duisburg

THYSSEN SCHULTE GMBH

POSTFACH 210842
D 57032 SIEGEN

BESCHEINIGUNG ÜBER MATERIALPRÜFUNGEN EN 10204 2d
DOCUMENT ON MATERIALS TESTS EN 10204
DOCUMENT DE CONTROLE DES MATERIAUX EN 10204

CERTIFICAT DE RECEPTION 3.1 B

Blatt-Nr. Page-No. Page-No 5

Werkstoff ; Quality ; Matériau / Lieferbedingungen ; Specification ; Conditions de livraison

L 485 MB / DIN EN 10208

Kennzeichnung: Marking: Marque MATERIAL, HEAT-NO., MANUFACTURING/SAMPLE-NO.

Zeichen des Lieferwerkes: Supplier's mark: Marque d'usine: THYSSEN ThyssenKrupp Stahl

CERTIFICADO N.º 4

HEAT-NO.	SAMPLE NO.	1) POSIT 2) STAT. 3) FORM	TEST-TEMP °C.	ENERGY 1	2	3	M
388804	543080	1)0129 2)0001 3)0007	+ 0	199,0	290,0	207,0	232,0
388814	543073	1)0129 2)0001 3)0007	+ 0	206,0	216,0	200,0	207,0
388824	543067	1)0129 2)0001 3)0007	+ 0	250,0	244,0	246,0	247,0
388834	543060	1)0129 2)0001 3)0007	+ 0	175,0	189,0	161,0	175,0
388844	543052	1)0129 2)0001 3)0007	+ 0	178,0	179,0	176,0	177,0
388854	543047	1)0129 2)0001 3)0007	+ 0	188,0	200,0	194,0	194,0

MECHANICAL CHARACTERISTICS B D T W - T E S T

HEAT-NO.	SAMPLE NO.	POSIT	STAT.	TEST-TEMP °C.	SHEAR-FACE KB1 %	ZB1 %	KB2 %	ZB2 %	ENERGY EA1	EA2
388784	543046	0129	0001	+ 0		100		100		

ThyssenKrupp Stahl
Abnahmetechnik

Es wird bestätigt, dass die Ergebnisse der Prüfungen den vereinbarten Lieferbedingungen entsprechen.
This is to certify, that the test results are in agreement with the specifications.
Nous confirmons que les résultats des essais sont conformes aux conditions convenues de vente.

ZERTIFIZIERT nach ISO 9001 QS-9000 VDA 6.1

CERTIFICATE
NR. NO.): 009600110003 DUISBURG-HAMBORN

ThyssenKrupp Stahl
Ein Unternehmen von ThyssenKrupp Steel

DISPO-NR.	Werks-Nr. Works-No. No de l'usine	Bestell-Nr. Order-No. No de commande	
*********	29.05601	131/74372282.24229	17.11.00 02035225591 02035224223

ThyssenKrupp Stahl - 47161 Duisburg

THYSSEN SCHULTE GMBH

POSTFACH 210842
D 57032 SIEGEN

BESCHEINIGUNG ÜBER MATERIALPRÜFUNGEN EN 10204 2d
DOCUMENT ON MATERIALS TESTS EN 10204
DOCUMENT DE CONTROLE DES MATERIAUX EN 10204

CERTIFICAT DE RECEPTION 3.1 B

Blatt-Nr. Page-No. Page-No 6

Werkstoff Quality ; Matériau / Lieferbedingungen ; Specification ; Conditions de livraison

L 485 MB / DIN EN 10208

Kennzeichnung: Marking: Marque: MATERIAL, HEAT-NO., MANUFACTURING/SAMPLE-NO.

Zeichen des Lieferwerkes: Supplier's mark: Marque d'usine: THYSSEN ThyssenKrupp Stahl

CERTIFICADO N.º 4

HEAT-NO.	SAMPLE NO.	POSIT	STAT.	TEST-TEMP °C.	KB1 %	ZB1 %	SHEAR-FACE KB2 %	ZB2 %	ENERGY EA1	EA2
388794	543085	0129	0001	+ 0		100		100		
388804	543080	0129	0001	+ 0		100		100		
388814	543073	0129	0001	+ 0		100		100		
388824	543067	0129	0001	+ 0		100		100		
388834	543060	0129	0001	+ 0		100		100		
388844	543052	0129	0001	+ 0		100		100		
388854	543047	0129	0001	+ 0		100		100		

STAT.
0001=AS ROLLED

POSIT
01=TOP

TYPE TENSILE TEST
0003=FLAT TENSILE TEST

POSIT
29=DIAG. 29 DEGREES

TYPE IMPACT TEST
0007=CHARPY- V

THIS CERTIFICATE HAS BEEN ISSUED BY A QUALIFIED ELECTRONIC DATA SYSTEM AND IS VALID ACC. TO EN 10204,PARA.5 WITHOUT SIGNATURE.

QUALITY ASSURANCE Geprüft APPROVED

WORKS EXPERT : Wenzel / Sartoris

ThyssenKrupp Stahl
Abnahmetechnik

Es wird bestätigt, dass die Ergebnisse der Prüfungen den vereinbarten Lieferbedingungen entsprechen.
This is to certify, that the test results are in agreement with the specifications.
Nous confirmons que les résultats des essais sont conformes aux conditions convenues de vente.

ZERTIFIZIERT nach ISO 9001 QS-9000 VDA 6.1

BENDER FERNDORF

ULTRASONIC TEST REPORT

Works order no.: **21186**	Tester:	Bohn/ Weinert	Scope of testing
Dimensions: 914 Ø x 12 mm	Date of testing:	20.09.01	(x) Testing of weld seam (USIP 20)
Material grade: L485MB	Place of testing:	Kreuztal-Ferndorf	( ) Testing of weld seam (SNUP)
Manufacturer: Bender-Ferndorf	Coupling	Water	(x) Testing of base material (OPR)
Customer: Felguera	Surface:	rough	( ) Testing of pipe ends (REP)
Evaluation by: Manufacturer	Type of equipme	USIP	( ) Testing of edge zones (RZP)
			( ) Manual testing (HP)

Adjustment:	USIP 20	SNUP	OPR	REP	RZP	HP
Testing acc. to:	10246-9		10246-15			
Measuring range:	0 - 150 mm		0 - 60 mm			
Testing frequency:	4 MHz		5 MHz			
Type of probe	W70Z4N		SEG5NC			
Adjustment of sensitivity at the test plate	with 3.2 mm Ø hole and notches		CERTIFICADO N.° 4			
Reference reflector						
max. defect echo Threshold	100 % BSH 33 % BSH	dB dB	46 dB 40 dB	dB dB	dB dB	dB dB
Adjustment of sensitivity acc. to AVG						
Reference reflector	---------	---------	Backwall	Backwall	Backwall	Backwall
max. back echo Threshold	————	————	dB dB	dB dB	dB dB	dB dB
Transfer correction	+ 2 dB	dB	+2 dB	dB	dB	dB

Remark:

Kreuztal-Ferndorf, 09.10.01

Eisen- u. Metallwerke Ferndorf GmbH
Qualitätsstelle / Prüfaufsicht

BENDER FERNDORF

ULTRASONIC TEST REPORT						Works order no.: 21186 Equipment: USIP	
Pipe No.	Hold points	Transverse seam	US indication	Indications of the edges zones	indications of the base material	indications of the pipe ends	okay
1							X
2							X
3							X
4							X
5			2 x				
6	Aa + Ai						
7							X
8	Aa + Ai						
9							X
10							X
11			2 x				
12							X
13							X
14							X
15							X
16							X
17	Aa + Ai						
18			CERTIFICADO N° 4				X
19							X
20							X

Aa = Hold point outside
Ai = Hold point inside

Durchstrahlungsbericht

radiographic-certificate

Item 1 + 2

Kom. Nr. 21186
Order-No.

Rohre
pipes: 914 Øx 12 mm

Besteller customer	Felguera	Auswertung nach evaluation acc. to	EN 10246-10/ class 1
Prüfstück test object	spirally welded pipes	Prüfumfang Scope of testing	weld seam ends, repairs
Beurteilung durch judgement of	manufacturer	Prüfungsort place of test	US-indications Kreuztal-Ferndorf
Röntgenanlage x-ray tube	Philips MCN -321	Dicke thickness	12 mm
Brennfleck focus	4 x 4 mm	Film Typ film type	T 200
Röhrenstrom amperage	10 mA	Format size	6 x 400 mm
Röhrenspannung voltage	165 KV	Fokus/Film-Abstand focus/film distance	700 mm
Belichtungszeit exposure	1 min.	Prüfanordnung exposure arrangement	picture 2
Werkstoff material	L485MB	Gruppe der Drahtstege image quality indicator	W10FE

CERTIFICADO N.º 4

Pipe No.	Beurteilung judgement									Note				Pipe No.	Beurteilung judgement									Note				Pipe No.	Beurteilung judgement									Note			
	Aa	Ab	Ba	Bb	C	D	Ea	Eb	F	e 1	e 2	e 3	ne 4		Aa	Ab	Ba	Bb	C	D	Ea	Eb	F	e 1	e 2	e 3	ne 4		Aa	Ab	Ba	Bb	C	D	Ea	Eb	F	e 1	e 2	e 3	ne 4
1										X				12										X																	
1A										X				12A										X																	
2										X				13	X										X																
2A										X				13A										X																	
3	X										X			14										X																	
3A										X				14A										X																	
4										X				15										X																	
4A										X				15A										X																	
5										X				16	X										X																
5A	X										X			16A										X																	
6										X				17										X																	
6A										X				17A										X																	
7										X				18										X																	
7A										X				18A	X										X																
8			X								X			19										X																	
8A										X				19A										X																	
9										X				20										X																	
9A										X				20A										X																	
10										X																															
10A										X																															
11										X																															
11A										X																															

Aa = Poren
porosity
Ab = Schlauchart, Gaseinschluß
worm holes (pipes)
Ba = Schlacken ver. Form u. Richtung
slag inclusion of any shape in any direction
Bp = Schlackenzeilen
slag lines

D = Wurzelfehler
lack of root fusion
Ea = Längsrisse
long-cracks
Eb = Querrisse
trans-cracks
F = Einbrandkerben
undercuts

e = erfüllt
fulfilled
ne = nicht erfüllt
not fulfilled
C = Bindefehler
lack of fusion

Abnahmegesellschaft
authorized inspector

Qualitätssicherung/Kontrolle
quality assurance/control
Eisen- u. Metallwerke Ferndorf GmbH
Qualitätsstelle - Prüfaufsicht

Unterschrift
signature

Datum
date
09.10.01

Seite 1 von 2
page of

Zeugnis Nr.
certificate no.

BENDER FERNDORF

Durchstrahlungsbericht

radiographic-certificate

Kom. Nr. 21186
Order-No.

Rohre
pipes: 914 Ø x 12 mm

Pipe No.	Beurteilung judgement									Note e			Note ne
	Aa	Ab	Ba	Bb	C	D	Ea	Eb	F	1	2	3	4
5K1									X		X		
5K2			X								X		
6Aa										X			
6Ai										X			
8Aa										X			
8Ai										X			
11K1			X								X		
11K2									X		X		
17Aa										X			
17Ai										X			

Pipe No.	Beurteilung judgement									Note e			Note ne
	Aa	Ab	Ba	Bb	C	D	Ea	Eb	F	1	2	3	4

Pipe No.	Beurteilung judgement									Note e			Note ne
	Aa	Ab	Ba	Bb	C	D	Ea	Eb	F	1	2	3	4

CERTIFICADO Nº 4

Abnahmegesellschaft
authorized inspector

Qualitätssicherung/Kontrolle
quality assurance/control
Eisen- u. Metallwerke Ferndorf GmbH
Qualitätsstelle - Prüfaufsicht

Seite 2 von 2
page of

Unterschrift
signature

Zeugnis Nr.
certificate no.

Datum
date
09.10.01

ZENTRALLABOR SIEGERLAND
BRAUN & CO.

Physikalische, chemische und metallographische Werkstoffprüfungen
Schadensuntersuchungen

Nach DIN EN 45001 durch die DAP Deutsches Akkreditierungssystem Prüfwesen GmbH anerkanntes Prüflaboratorium
DAP-P-01.025-00-96-00
Die Akkreditierung gilt für die in der Urkunde aufgeführten Prüfverfahren

Auftraggeber : customer :	Eisen-u.Metallwerke Ferndorf Mühlenweg 2 57223 Kreuztal	Abnahme : Inspection :	ZLS
		Regelwerk : Specification :	EN 10208
ZLS-Prüf-Nr. : ZLS test-No. :	**7671**	Grundwerkstoff : base metal :	L 485 MB
Proben-Nr. : test-No. :	867.1	Zusatzwerkstoff : filler metal :	
Kom.-Nr. : kom.-No. :	21186	Wärmebehandlung : heat treatment :	
Abmessung : dimension :	t = 12,0 mm	Schmelze/Blech-Nr. : heat/plate-No. :	ohne Angabe

Seite 01 von 01
Page of

HÄRTEPRÜFUNG
hardness reading — EN ISO 6507-1

Prüfverfahren : HV
testmethode :

Prüflast : 5 kp
load :

Lfd.-Nr. No.	Härte hardness	Lage Position	Lfd.-Nr. No.	Härte hardness	Lage Position	Lfd.-Nr. No.	Härte hardness	Lage Position	Lfd.-Nr. No.	Härte hardness	Lage Position
1	214	PM	21			41			61		
2	222	HAZ	22			42			62		
3	237	WM	23			43			63		
4	225	HAZ	24			44			64		
5	223	PM	25			45			65		
6	209	PM	26			46			66		
7	229	HAZ	27			47			67		
8	232	WM	28			48			68		
9	226	HAZ	29			49			69		
10	218	PM	30			50			70		
11			31			51			71		
12			32			52			72		
13			33			53			73		
14			34			54			74		
15			35			55			75		
16			36			56			76		
17			37			57			77		
18			38			58			78		
19			39			59			79		
20			40			60			80		

CERTIFICADO N.º 4

Skizze :

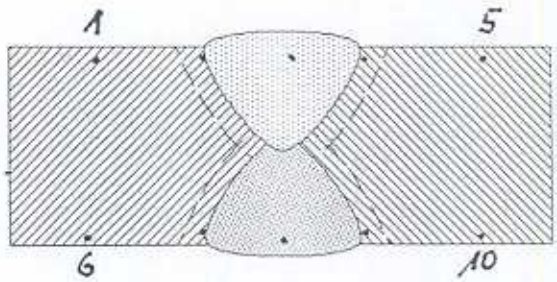

PM	unbeeinflußter Grundwerkstoff parent metal
HAZ	wärmebeeinflußte Zone heat affected zone
WM	Schweißgut weld metal

Position / position :	PM	HAZ	WM
Mindestwert / minimum :	209	222	232
Mittelwert / means :	216	226	235
Maximalwert / maximum :	223	229	237

Bemerkung :

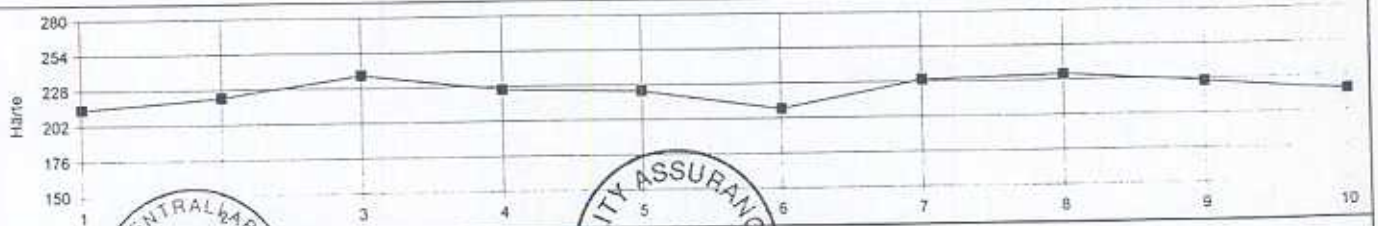

ZENTRALLABOR SIEGERLAND

QUALITY ASSURANCE Geprüft APPROVED

Prüfer: examiner: M. Goebel

Abnahmegesellschaft: Inspection society:

Freudenberg, den 28.09.2001

Die Prüfergebnisse beziehen sich ausschließlich auf die Prüfgegenstände. Dieser Bericht darf ohne schriftliche Genehmigung des Prüflabors nicht auszugsweise vervielfältig werden.

Makroaufnahme
Macrophoto

BENDER-FERNDORF

Probe Nr.
Specimen No. 867.1

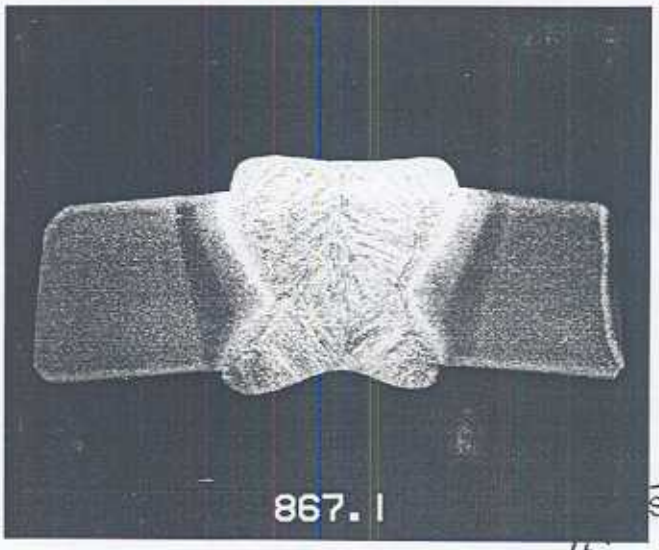

QUALITY ASSURANCE
Geprüft
APPROVED

V = 2:1

CERTIFICADO N.º 4

Designación	Simbólica	L 485 MB
	Numérica	1.8977
Norma	UNE-EN 10208-2:1996	

COMPOSICIÓN QUÍMICA

C% 0.16 max	P% 0.025 max
S% 0.020 max	Mn% 1.7 max
Si% 0.45 max	Cr% 0.30 max
Ni% 0.30 max	Mo% 0.10 max

Otros elementos %

V:0.10 max Nb:0.06 max
Ti:0.06 max N:0.012 max
A[illegible]l:0.015-0.060
V[illegible]b+Ti:0.15 max
Cu:0.25 max

CARACTERÍSTICAS MECÁNICAS

Re N/mm²		485-605
Rm N/mm²		570 min
A %		20 min
Resiliencia	°C	
	Jmin	

Otros ensayos

DOBLADO:6e

CERTIFICADO N.º 4

USO PREVISTO:

acero para tubos soldados para tuberías de fluidos combustibles

OBSERVACIONES:

CARBONO EQUIVALENTE:0.43% max

© AENOR

CLIENTE (Customer)	DESTINO (Destination)	CERTIFICADO (Certificate)	
		(Number)	HOJA (Page)
A.G. ASTURIAS, S.A.	CRTA. LUGONES-AVILES, KM. 16,5	28803981218	Q-001

ACERALIA Productos Largos, s.a.

AENOR ER Empresa Registrada ER-030/2/92

FACTORIA DE: GIJON

PRODUCTO: CHAPA

ORDEN DE SUMINISTRO (Works no.)	ESPECIFICACION (Specification)	SOCIEDAD INSPECTORA (Classification society)	FECHA (Date) DIA (Day)	MES (Month)	AÑO (Year)
299035	S 235 JRG2-EN 10025:1993 FE 360 B -EN 10025:1990	ACERALIA	19	12	98

CERTIFICADO DE INSPECCION

INSPECTION CERTIFICATE

ESTE CERTIFICADO ESTA DE ACUERDO CON EN 10204 3.1B

Marca Fabricante/Producer Mark **ENS**

POSICION (Item)	IDENTIFICACION DE LA CHAPA (Plate no.)	DIMENSIONES (Dimensions) mm. ESPESOR (Thickness)	ANCHO (Width)	LARGO (Length)	PESO (Weight) Kg.	ESTADO DE SUMINISTRO (As delivered cond.) (2)	INSPEC. ULTRASON. (Ultrason. Inspect.) (1)	TAMAÑO GRANO (Grain size) (3) IDENTIFICACION DE LA MUESTRA (Sample no.)	C-cabeza (top) P=Pie (bottom)	ASTM E 112	ANALISIS (Analysis)	IDENTIFICACION DE LA MUESTRA (Sample no.)	C-cabeza (top) P=Pie (bottom)	NUMERO DE COLADA (Heat no)	COMPOSICION QUIMICA (Chemical composition) % C (X 100)	Mn	Si	S	P	Al	Ti	V	Nb	Cr	Mo	Ni	Cu	p.p.m. N (X 10.000)	H		Ca	B	% Sn (X1000)	Ceq. (X100)
010	3056384-1	3000	2500	12000	7065						C			89051114	07	02	10	8	14	031								029						
010	3056447-1	3000	2500	12000	7065																													
010	3057065-1	3000	2500	12000	7065																													
011	3056463-1	3500	2500	12000	8243		E																											

CERTIFICADO N.º 5

HIERROS CANTON S.L.
B7 2035 011
La Barca - Legrazana - CARREÑO
Teléfono 557 47 03 - Fax: 557 44 57

Numero de chapas (no.of plates): 4

Peso total kg. (total weight): 29.438

OBSERVACIONES (Remarks)

A: 2013

NOTAS (notes)

(1)

Pol. Ind. Canciones-Telf. 98 551 82 99
A. G. ASTURIAS, S.A.
APARTADO 208-33400 AVILES

(5)

(2) = Bruto Laminación (as Rolled)
A = N + R B = L + R
L = LAMINACION CONTROLADA (Controlled rolling)
T = TRATAMIENTO TERMOMEC. (Termomec. Forming)
R = REVENIDO (Precipitation Heat Treated)
N = NORMALIZADO (Normalized)
920±10°C; 1,5min/mm minimo(minimum)

(3) ANALISIS DE { C=COLADA P=PRODUCTO C=Heat P=Check } Analysis

Por la Sociedad Inspectora (By the classification society)

Por (By) ACERALIA
Jefe de Certificación
CERTIFICACION E INSPECCION DE EXPEDICIONES

CHAPA GRUESA

cve061

CLIENTE (Customer)	DESTINO (Destination)	CERTIFICADO (Certificate) NUMERO	HOJA (Page)
A.G. ASTURIAS, S.A.	CRTA. LUGONES-AVILES, KM. 16,5	28803981218	M- 001

ORDEN DE SUMINISTRO (Works no.)	ESPECIFICACION (Specification)	SOCIEDAD INSPECTORA (Classification society)	FECHA (Date) DIA (Day)	MES (Month)	AÑO (Year)
299035	S 235 JRG2-EN 10025:1993 FE 360 B -EN 10025:1990	ACERALIA	19	12	98

ACERALIA Productos Largos, s.a.

AENOR — Empresa Registrada — ER-030/2/92

FACTORIA DE PRODUCTO: GIJON — CHAPA

CERTIFICADO DE INSPECCION

INSPECTION CERTIFICATE

ESTE CERTIFICADO ESTA DE ACUERDO CON EN 10204 3.1B

Marca Fabricante/Producer Mark **ENS**

IDENTIFICACION DE LA CHAPA (Plate no.)	IDENTIFICACION DE LA MUESTRA (Sample no.) C = cabeza (top) P = Pie (bottom)	ESPESOR DE LA MUESTRA (Thickness of sample) mm.	ENSAYO DE TRACCION (Tensile test): PROBETA (Specimen) (1)	Fle EN CALIENTE (At elevate temperat.): IDENTIFICACION DE LA MUESTRA (Sample no.)	C = Cab. (top) P = Pie (bot.)	ORIENTAC. (Orientat.) (2)	TEMP. ENSA. (test temp) C	0,2 % MPa (N/mm2)	ORIENTAC. (Orientat.) (2)	Re SUPERIOR (Y.P.) MPa (N/mm2)	Re 0.2% (Y.S) MPa (N/mm2)	R (T.S.) MPa (N/mm2)	A (Elong.) %	ESTRICCION (Reduction of area) %	DOBLADO (Bend test): ORIENTACION (Orientation) (2)	MANDRIL (Mandrel) n	BIEN (Good)	RESILIENCIA (Impact test): ORIENTAC. TAMAÑO UNIDADES (Units) (2)(4)(3)	TEMP ENSA. (Test temp) C	INDIVIDUALES (Individual values) 1	2	3	MEDIA (Average)	FRACT.DUCTIL (Shear fract.) % 1	2	3	EXPANSION LATERAL (Lat.Exp.) (mm x 100) 1	2	3	RESILIENCIA ENVEJECIDA (Impact test aged): ORIENTAC. (Orientat.) UNIDADES (Units) (2) (3)	TEMP ENSA. (Test temp) C	GRADO (Grade)	INDIVIDUALES (Individual values) 1	2	3	MEDIA (Average)
3056384-1	3056279-1C	3200	A						T	257		439	29	5																						
3056447-1	3056438-1C	3500	A						T	232		414	28	0																						
3057065-1	3056506-1C	3500	A						T	257		422	28	0																						
3056463-1	3056451-1C	3000	A						T	244		420	29	0																						

CERTIFICADO N.º 5

MESTROS CARRIÑO, S.L.
Bizkaia
La Barca - Legizamo - CARRIÑO
Teléfono 557 47 03 - Fax: 557 44 57

OBSERVACIONES (Remarks)

NOTAS (Notes)
(1) A...Lo=200mm. (8")
B....Lo= 50mm.(2")
*.....Lo= 5do

(2) L = Longitudinal (long.test)
T = Transversal (trans.test)
(4) A = 5 x 10 Tamaño
B = 7,5 x 10 Probeta
C = 10 x 10
(3) Julios (joules)
K = Julios/cm2

Por Sociedad Inspectora (By the classification society)

Por (By) ACERALIA PLANTA GRUESA
Productos Largos
Jefe de Certificación
Calidad Vigente
DEPARTAMENTO DE EXPEDICIONES

cvs05l

1ª ENVIO

SIDEX

COMBINATUL SIDERURGIC SIDEX S.A.

GALATI – ROMANIA

INSPECTION CERTIFICATE No: 8979325

According to: EN 10204/3.1.B

Contents 12 pages

6

HIERROS CANTON, S.L.
B/ Sagrada, 1 - CARRUNO
La Barca - Logroño - Fax: 557 44 57
Teléfono 557 47 93

CUSTOMER : "TRANSACCIONES SIDERURGICAS S.A."

ORDER : 03059

PRODUCT : CHAPA GRUESA DE ACERO LAMINADA EN CALIENTE EN CALIDAD S275J2G3 SEGUN EN 10025

NORMA : EN 10025 / 94 ; EN 10029 / 91

EXTERNAL ASPECT : SUITABLE

DELIVERY STATE : NORMALIZING ROLLED

DATE : 29.01.01 *ADVICE OF DISPATCH :* *WAGON :*

Hierros Canton, S.L.
8 de Noviembre del 2001

LOT: 1

TOTAL NUMBER OF PIECES = 1177.

NO. ORD	DIMENSIONS IN MM	PIECES	US	WEIGHT KG	HEAT NO	QUALITY
1	6 X 2000 X 12000 01÷02(1,2) 03/1 04/1,2 05/2 06/1,2 07/1 09/1 10÷11(1,2) 12/2 13÷17(1,2)	27			936427	S 275 J2G3
2	6 X 2000 X 12000 18÷26(1,2) 27/2 28÷33(1,2)	31			936427	S 275 J2G3
3	6 X 2000 X 12000 34/1,2 35/1 36/2 37÷42(1,2)	16			936427	S 275 J2G3
4	6 X 2000 X 12000 38÷42(1,2)	10			936403	S 275 J2G3
5	6 X 2500 X 12000 01÷03(1,2) 04/2	23			922748	S 275 J2G3

CERTIFICADO N.º 6

TO BE CONTINUED

QUALITY CONTROL DEPARTAMENT

A-2009

NO. ORD	DIMENSIONS IN MM	PIECES	US	WEIGHT KG	HEAT NO	QUALITY
	02÷03(1) 04/1,2					
93	20 X 2500 X 12000 05/1,2 06/1 07÷08(1,2)	7			922683	S 275 J2G3
94	20 X 2500 X 12000 09÷10(1) 11/1,2 12/1	5			922683	S 275 J2G3
95	20 X 2500 X 12000 13÷14(1,2)	4			922683	S 275 J2G3
96	20 X 3000 X 12000 05÷07(1,2)	6			936356	S 275 J2G3
97	20 X 3000 X 12000 08÷09(1,2)	4			936356	S 275 J2G3
98	20 X 3000 X 12000 13÷15(1,2)	6			922702	S 275 J2G3
99	20 X 3000 X 12000 16/1,2	2			922702	S 275 J2G3
100	22 X 2500 X 12000 01÷04(1,2)	8			936359	S 275 J2G3
101	22 X 2500 X 12000 01/1 02÷03(1,2)	5			922705	S 275 J2G3
102	22 X 2500 X 12000 04/1,2	2			922705	S 275 J2G3
103	22 X 2500 X 12000 01/1,2 02/1	3			922691	S 275 J2G3
104	25 X 2500 X 12000 03/1,2	2			922691	S 275 J2G3
105	25 X 2500 X 12000 04/1,2	2			922691	S 275 J2G3
106	25 X 2500 X 12000 05÷07(1,2)	6			922705	S 275 J2G3
107	25 X 2500 X 12000 05÷07(1,2)	6			936359	S 275 J2G3
108	25 X 2500 X 12000 08/1,2	2			936359	S 275 J2G3
109	25 X 3000 X 12000 01/1 03÷05(1)	4			936360	S 275 J2G3
110	25 X 3000 X 12000 06÷10(1)	5			936360	S 275 J2G3
111	25 X 3000 X 12000 09÷13(1)	5			922705	S 275 J2G3
112	25 X 3000 X 12000 14/1	1			922705	S 275 J2G3
113	30 X 2500 X 12000 11÷15(1)	5			936360	S 275 J2G3

CERTIFICADO N.º 6

TO BE CONTINUED

Certificat: 8979325

NO. ORD	DIMENSIONS IN MM	PIECES	US	WEIGHT KG	HEAT NO	QUALITY
114	30 X 2500 X 12000 16÷18(1) 20/1	4			936360	S 275 J2G3
115	30 X 2500 X 12000 01÷05(1)	5			922709	S 275 J2G3
116	35 X 2500 X 12000 21÷22(1)	2			936360	S 275 J2G3
117	35 X 2500 X 12000 03÷05(1)	3			910777	S 275 J2G3
118	35 X 2500 X 12000 01÷04(1)	4			936363	S 275 J2G3
119	35 X 2500 X 12000 05÷08(1)	4			936363	S 275 J2G3
120	40 X 2500 X 12000 06÷09(1)	4			922709	S 275 J2G3
121	40 X 2500 X 12000 10÷11(1)	2			922709	S 275 J2G3
122	40 X 2500 X 12000 09÷12(1)	4			936363	S 275 J2G3
123	40 X 2500 X 12000 08/1	1			922705	S 275 J2G3
124	50 X 2500 X 10000 01÷04(1)	4			936337	S 275 J2G3
125	50 X 2500 X 10000 06÷08(1)	3			936337	S 275 J2G3
126	50 X 2500 X 10000 09÷12(1)	4			936337	S 275 J2G3
127	60 X 2500 X 8000 01÷04(1)	4			922682	S 275 J2G3
128	60 X 2500 X 8000 06/1 08/1	2			922682	S 275 J2G3
129	60 X 2500 X 8000 09÷12(1)	4			922682	S 275 J2G3
130	40 X 3000 X 10000 12÷15(1)	4			922709	S 275 J2G3
131	40 X 3000 X 10000 16÷17(1)	2			922709	S 275 J2G3

CERTIFICADO N.º 6

M E C H A N I C A L T E S T S

THE TESTS REFERS TO THE ABOVE ITEMS WITH THE SAME NUMBER ORD.

NO. ORD	RM N/MM2	RE N/MM2	A5 %	BENDING TEST	ISOV -20 °C J
1	488	382	29		64- 61- 69
2	520	390	30		60- 63- 61
3	482	346	30		65- 70- 64
4	483	366	32		71- 82- 70
5	498	363	33		50- 56- 58

TO BE CONTINUED

HIERROS CANTON, S. L.
B/33834011
La Barca - Logroño - CARREÑO
Teléfono 557 47 93 - Fax: 557 44 57

M E C H A N I C A L T E S T S

THE TESTS REFERS TO THE ABOVE ITEMS WITH THE SAME NUMBER ORD.

NO. ORD	RM N/MM2	RE N/MM2	A5 %	BENDING TEST	ISOV -20 °C J
100	483	341	28		136- 140- 136
101	498	359	30		130- 131- 136
102	472	335	27		142- 148- 152
103	495	372	24		103- 121- 128
104	495	372	24		103- 121- 128
105	490	378	25		126- 126- 118
106	487	365	29		161- 163- 156
107	502	393	24		121- 132- 118
108	481	337	25		86- 110- 90
109	500	364	26		100- 88- 118
110	485	338	26		88- 82- 118
111	479	350	26		156- 160- 152
112	464	313	26		140- 148- 121
113	511	430	26		58- 41- 46
114	488	362	28		64- 81- 70
115	479	363	26		91- 96- 80
116	446	318	30		31- 29- 38
117	471	324	26		110- 98- 118
118	478	325	30		67- 58- 70
119	481	351	28		53- 48- 60
120	472	331	26		93- 94- 89
121	478	337	26		100- 90- 92
122	484	357	30		42- 56- 52
123	478	350	30		85- 68- 60
124	488	338	30		60- 50- 72
125	484	337	32		68- 70- 74
126	484	344	28		124- 120- 132
127	498	318	32		72- 62- 70
128	484	318	30		70- 82- 90
129	490	312	30		82- 100- 115
130	479	325	32		62- 72- 62
131	470	331	29		54- 56- 56

HIERROS CANTON, S. L.
B 73384011
La Barca - Logrozana - CARREÑO
Teléfono 557 47 93 - Fax: 557 44 57

CERTIFICADO N.º 6

K I L L E D P O U R I N G S A M P L E A N A L Y S I S %

HEAT	C	MN	SI	S	P	AL	AS	CR	NI	CU	V	N2 BELOW	NB	CE
936427	0.12	0.90	0.23	0.020	0.023	0.040								
936403	0.11	0.89	0.29	0.014	0.028	0.052								
922748	0.13	0.91	0.25	0.015	0.017	0.053								
922749	0.13	0.92	0.27	0.012	0.020	0.055								
910766	0.14	0.92	0.25	0.010	0.016	0.050								
936420	0.11	0.93	0.23	0.010	0.035	0.050								
922673	0.16	0.98	0.22	0.014	0.023	0.040								
922672	0.16	0.84	0.27	0.012	0.017	0.062								
926326	0.15	0.85	0.28	0.012	0.018	0.066								
936355	0.12	0.84	0.30	0.012	0.020	0.055								

TO BE CONTINUED

Certificat: 8979225

KILLED POURING SAMPLE ANALYSIS %

HEAT	C	MN	SI	S	P	AL	AS	CR	NI	CU	V	N2	NB	CE
												BELOW		
936423	0.13	0.89	0.25	0.014	0.024	0.046								
910778	0.14	0.94	0.28	0.012	0.024	0.058								
936402	0.16	1.00	0.27	0.017	0.022	0.050								
910782	0.14	0.88	0.29	0.010	0.016	0.065								
910786	0.12	0.92	0.29	0.011	0.021	0.058								
936428	0.13	0.86	0.23	0.015	0.024	0.040								
910783	0.14	0.93	0.25	0.011	0.021	0.050								
910785	0.15	0.93	0.32	0.010	0.026	0.076								
910777	0.15	0.98	0.23	0.008	0.018	0.039								
936431	0.14	0.92	0.30	0.012	0.025	0.049								
936356	0.[illegible]	1.00	0.28	0.010	0.026	0.055								
922709	0.15	1.05	0.30	0.012	0.022	0.045								
922701	0.16	1.05	0.28	0.010	0.022	0.035								
922693	0.15	1.00	0.28	0.014	0.020	0.035								
936389	0.15	0.94	0.26	0.010	0.025	0.054								
922705	0.14	0.94	0.28	0.007	0.022	0.033								
2269[illegible]	0.18	1.03	0.25	0.010	0.027	0.025								
936369	0.16	0.96	0.27	0.010	0.026	0.026								
922709	0.15	1.00	0.25	0.011	0.021	0.026								
936366	0.15	0.97	0.17	0.011	0.025	0.025								
936337	0.17	1.08	0.27	0.011	0.024	0.045								
922692	0.19	1.02	0.26	0.012	0.027	0.038								

HIERROS CANTON, S. L.
La Barca - Logroño - CARREÑO
Teléfono 557 47 00 - Fax 557 41 57

CERTIFICADO N.º 6

INSTITUTUL SIDERURGIC SIDEX-S.A. GALAȚI
C.T.C. — L. C. — 2
Documente de calitate
NR. 6

Inspector name: *Stroe Eugenia*

QUALITY CONTROL DEPARTAMENT

O.F. 10607 CERTIFICADO Nº : 001

HIERROS LAMINADOS ASTURIAS, S/A

ACEROS - VIGAS - REDONDOS DE CONSTRUCCION - CALIBRADOS - TUBERIAS - CHAPAS
Avda. Argentina, s/n. - Apartado de Correos, 383 – Telfs. 532.22.00-04-08 – Fax (98) 532.75.36
33212 GIJON (Asturias)

7

CERTIFICADO DE CALIDAD

NUMERO DE PROVEEDOR:40000028
NUMERO CERTIFICADO: 904
NUMERO PEDIDO:3.921 y 3.933
NORMAS DEL CERTIFICADO ORIGINAL: EN 10204
N°13.302 y 13.324 **FECHA:** 23/10/2001

DETALLE DE LOS PRODUCTOS:

POSS	COLADA	PRODUCTO	LONGITUD (mm.)	MODELO CERTIFDO.	NORMA MATERIAL	NORMA FABRICACIÓN	CALIDAD
1	35068	CUADRADO 60X60X4	6,000	2.2.		EN10210	ST44.2
2	6859/99	PLANO 30X20	6,000	3.1.B	EN10025		S275JR
3	94374/0	PLANO 30X15	6,000	3.1.B			S275JR
4	082747	PLANO 140X6	6,000	3.1.B	EN10025-94	UNE36-543-80	S275JR
5	D5618	CARRILERA 60	6,000	2.2.		DIN59413	FEP02GZ275

CERTIFICADO N.º 7

COMPOSICION QUIMICA:

POSS	C%	Mn%	Si%	S%	P%	Al%	N%	Ce%	Ni%	Cr%
1	0.140	0.850	0.015	0.011	0.014	0.047				
2	0.160	0.530	0.080	0.038	0.012					
3	0.137	0.564	0.178	0.005	0.004		0.007			
4	0.100	0.580	0.170	0.043	0.012			0.259		
5	0.050	0.240	0.010	0.006	0.010	0.040				

PROPIEDADES MECANICAS:

POSS	LIMITE ELASTICO N/mm2	CARGA ROTURA N/mm2	ALARGAMIENTO %	IDENTIFICACION		ESPESOR
				CHAPA	MUESTRA	MUESTRA
1	409.0	456.0	34.0			
1	410.0	457.0	33.0			
2	297.0	444.0	32.8			
3	298.0	444.0	34.6			
4	328.0	452.0	41.0			
5	284.0	391.0	42.0			
5	270.0	382.0	40.0			

DATOS CORRESPONDIENTES AL CERTIFICADO DE CALIDAD DEL PROVEEDOR.

CONTROL DE CALIDAD DE HIERROS LAMINADOS ASTURIAS S.A.

CANTIDAD SUMINISTRADA: 60 Metros y 810 Kgs.

DEPARTAMENTO DE CALIDAD

Pedro Antonio Fernández

GIJON A 24 DE OCTUBRE DE 2001

CARGO: 6908300-000
PEDIDO: 5032758
P.P.T. 2001-2002-2003-2004
CANT. 6 - 40 - 40 - 40
PLANO 6908300-4C Rev. 01

Pcia. de Asturias Telf. 985 26 22 19
ASTURIAS

COVEMYM
CONTROL DE CALIDAD

T.T.I. - Tubacex Tubos Inoxidables, S.A.

Registro Mercantil de Alava, Tomo 597, Folio 189, Hoja VI 2986 - N.I.F. A-01140227

TUBACEX

MILL TEST CERTIFICATE EN 10204 3.1.B	Number: 311798 Page: 1 / 1	Rev: 0
	Date: 27.10.2000	

CUSTOMER :COTUBES, S.A. PO :7652 OUR REFERENCE:R471

STANDARD :DIN 17458 PK1

ADDIT.SPECS :

GRADE :1.4301-1.4306 (MECATEX) DIMENSIONS :80 X 50 X 15

MATERIAL :SEAMLESS STAINLESS STEEL TUBE
HOT FINISHED; PASSIVATED;
PLAIN ENDS SQUARE CUT;

(8)

----ITEM----- YOUR	TTI.	-HEAT- NR.	NO. OF PIECES	---WEIGHT-- KG	-TOTAL LENGTH-	--UNIT LENGTH--
	2	28882/BKD	38	5067	192,33	3,7 - 6,3 MTR.

RAW MATERIAL

MELTING PROCESS: ELECTRIC FURNACE + A.O.D FROM: ACERALAVA
PEELED BARS; MACROETCH TESTING: GOOD;

(1)	C	Mn	Si	P	S	Ni	Cr
L 28882	0,022	1,45	0,400	0,025	0,0260	10,20	18,25
[illegible]882	0,021	1,44	0,400	0,025	0,0250	10,20	18,30

(1) L: LADLE; C: PRODUCT

CERTIFICADO N.º 8

HEAT TREATMENT

SOLUTION ANNEALED AT MIN 1040 °C RAPIDLY COOLED

= TESTS = NR. HEAT	NR. TEST	TEMP.	------TENSION------ MPA RM	RP 0,2	RP 1,0	% A	% Z	--I M P A C T T E S T S-- TEMP.	MINIMUM	AVERAGE	HARDNESS
											80
28882	855H	20	579,0	291,0	337,0	46,0					78

TECHNOLOGICALS

RING EXPANDING TEST: GOOD

METALLURGICAL TEST

INTERGRANULAR CORROSION: DIN50914/NFA05159 T1/A262PRACT"E2/ISO3651METH"A":GOOD

NON DESTRUCTIVE TEST

100 % HYDROSTATIC PRESSURE TESTED AT 80 BAR , DURING 5 SEC, GOOD
STEEL GRADE CHECKED ON EACH TUBE BY SPECTROGRAPHY
DIMENSIONAL CHECKING ON EACH TUBE, SATISFACTORY
VISUAL INSPECTION ON EACH TUBE, SATISFACTORY

OTHER MATERIAL SPECIFICATIONS

NF A49317 + ASTM A511 Z2Z6CN18.10-09 + MT304-304L

MARKS

TX3
TUBACEX 80 X 50 1.4301-1.4306 (MECATEX) C2 S 1 SCHM/.....
NF A49-317 Z2-Z6 CN 18.10-09 COULEE/..... ASTM-A 511 MT304-304L
HEAT/..... PMI

REMARKS

TOL.: ISO 2938

ALBARAN 804901 & 804919

ES COPIA FIEL DEL CERTIFICADO ORIGINAL

INOXCENTER, S.A.
C.I.F. A 08 332892
Calle F n.º 20 Sector C Zona Franca
08040 BARCELONA

AENOR ER Empresa Registrada

CERTIFIED IQNet QUALITY SYSTEM

TÜV SÜDDEUTSCHLAND

We hereby certify that the material herein described has been manufactured, sampled, tested and inspected in accordance with above standards and specifications and satisfies the order's requirements.
This certificate is issued by a computerized system and it is valid without signature. On the original certificate the responsible's signature red coloured is stamped.
In case the owner of the original certificate would release a copy of it, he must attest its conformity to the original one, taking upon himself the responsibility for any unlawful or not allowed use.

T.T.I.
Tubacex Tubos Inoxidables, S.A.
INGENIERIA DE CALIDAD
Jon Altuna Zubero

INMICRO

Pedido Nº: 5032750
Albarán: 6835,7024
Identificación: 390038
HA.: 1005 y 1006.

69083CO

5032740/6908300

FORONI S.p.A. 21055 Gorla Minore (VA) ITALIA	Marchio -	CERTIFIED MATERIAL TEST REPORT Certificato di collaudo EN 10204-3.1 B	Data 23/03/2000	Cert. N° 0712/2000 Rev 0

Cliente: METALSTEEL di So.Ge.Pur. S.p.A.

Ordine: 283

Materiale: 1.4307/1.4301 - F304L/F304 - T.304L/T 304
Materiale classe: FORMAC

Specifiche: EN 10088-3 (04/95); ASTM A182-99*, A276-98b, A479-99a; Documento FORONI S.p.A. 21/01/2000.
(* Solo analisi chimica e proprietà meccaniche).

Posiz.	Descrizione	Dimensione - mm	Rapp. isol	N° Pezzi	Peso Kg	Condizioni di fornitura	Elaborazione	Colata n°
2	Barra tonda D.	120	22.0	9	4200	FORGIATO, SOLUBILIZZATO E PELATO	E.F. / A.O.D.	00035 V.A.R. -

% Analisi chimica -

	C	Mn	Si	Cr	Ni	S	P	N
Heat analysis	0.025	1.67	0.34	16.14	8.28	0.025	0.028	0.071

Caratteristiche meccaniche -

Prova n°	Orient.	Temp. °C	Y.S. 0.2 % MPa	Y.S. 1% MPa	U.T.S. MPa	EL. % 50	R of A. %	Durezza HB	HRC	Resilienza - Orient.	Temp. °C	KV J			Espansione laterale mm			Area duttile %			Dim. grano ASTM E112-96
8945/1	LNG	R.T.	287	329	599	57.6	76.5	156		LNG	R.T.	232	268	252							5

CERTIFICADO N° 9

Note -
- Solubilizzazione a 1060°C x ½ h / pollice - Acqua.
- Materiale fabbricato e collaudato secondo norma EN 10088-3, con analisi atta a garantire la conformità alle norme e gradi indicati.
- Materiale classe FORMAC ad alta lavorabilità.

COPY CONFORMING TO THE ORIGINAL METALSTEEL Divisione di So.Ge.Pur. S.p.A.
LUCA PILONI
SIGNATURE

Vs. Ord. Telef.
Ns. Bolla 63514
del 25/10/01

Il materiale è in accordo alle specifiche citate. Il materiale è stato fabbricato in conformità al programma di garanzia della qualità della FORONI S.p.A.

-Material made in Italy. - No welds, no mercury and radioactive contamination.

Q. A. Manual
Data 10/01/2000

Rep. Ass. Qualità: SCQ - P.MONTI

Ispettore: SGQ - L.GALLAZZI

A = 35-36-37-38-43

ND.404 001 12:49 29/10/01

RAUTARUUKKI STEEL

VASTAANOTTOTODISTUS INSPECTION CERTIFICATE ABNAHMEPRÜFZEUGNIS CERTIFICAT DE RECEPTION

EN 10 204-3.1.B (DIN 50049-3.1B)

A 1/2
12468 -01
5032574

Tilaaja Purchaser Besteller Acheteur	Vastaanottaja Consignee Empfänger Destinataire	Päivämäärä Date Datum Date
FELGUERA CONSTRUCCIONES ES-33930 BARROS, LANGREO, SPAI	FELGUERA CONSTRUCCIONES ES-33610 TURON MIERES ASTORIAS	02.10.2001 6908300

TOIMITUSERA DELIVERY LIEFERUNG LIVRAISON

Tilaus Order Bestellung Commande Merkki Mark Zeichen Marque	API-1391
Tilausvahvistus Order Confirmation Auftragsbestätigung Accuse de reception	12468
Laivaus Shipping Verschiffung Embarquement	AMELAND
Toimitustyyppi Delivery type Versandart Type de livraison	TOTAL DELIVERY
Todistus Certificate Zeugnis Certificat	3B1

Laatuleimaus Quality Stamping
Markenbezeichnung Qualite
P355NL2

HA 20

Sulatus nro levy nro Cast No. plate No.
Schmelzen Nr. Walztafel Nr. Coulee No tole No
Valmistajan merkki Mark of the Manufacturer
Zeichen des Herstellers Signe du producteur
Tarkastajan leima Stamp of work's Inspector
Stempel des Werkssachverständigen Poincon de controle
Vastaanottajan leima Stamp of Surveyor
Stempel des Sachverständigen Poincon d l'expert
Muut leimaukset Other Stamps
Andere Stempelung Les autres reperes poinconnes

XXXXX XX XX

		Toleranssit Tolerances Toleranzen Tolerances
Tuote Product Erzeugnisform Produit	HEAVY PLATES	EN 10029/1991 CLASS B
Laatu Quality Werkstoff Qualite	EN10028-3 P355NL2	EN 10028 DEC 1992
Laatuselvitys Quality Specification Qualitätspezifikation Specification de qualite	WELDABLE FINE-GRAIN PRESSURE VESSEL STEEL	

(10)

Tekniset vaatimukset ja/tai viralliset määräykset
Lieferbedingungen und/oder amtliche Vorschriften
Technical terms of Delivery and/or Official Regulations
Stipulations de la commande et/ou prescriptions officielles

Positio Item Pos. Poste	Mitat mm Dimensions mm Abmessungen mm Dimensions mm	Merkki Mark Zeichen Marque	Kpl Pcs Stück Quantite	Paino kg Weight kg Gewicht kg Poids kg	Sulatus levy nro Cast plate No. Schmelz Walztafel Nr. Coulee Tole No	Koe nro Test No Prüf No Essai No

YIELD STRENGTH, ELONGATION AND IMPACT TEST CHARPY-V AT -50 DEG. C
34/24 J/CM2 (TRANSV.) TO EN 10028.
NORMALIZED STEEL PLATES

SURFACE CONDITION EN 10 163-2:1991 CLASS B3

001	45.00 X 2070	X	6210	2	9082	62363	021 021
001	45.00 X 2070	X	6210	2	9082	62363	022 022
001	45.00 X 2070	X	6210	2	9082	62363	041 041
001	45.00 X 2070	X	6210	2	9082	62363	042 042

*	8	36328
**	8	36328
***	8	36328

CERTIFICADO N.º 10

8 ≠ 45 6908300 A: 20

02.10.2001

RAUTARUUKKI STEEL
Testaus ja tarkastus Testing and Inspection
Prüfung und Kontrolle Essais et Contrôle

Täten todistamme, että toimitus on tilausvahvistuksen mukainen.
We hereby certify that the material described above has been tested and complies with the terms of the order contract.
Es wird bestätigt, dass die Lieferung geprüft wurde und den Vereinbarungen bei der Bestellannahme entspricht.
Nous certifions que la livraison est conforme aux stipulations de l'acception de la commande.

M. Valkama
MINNA VALKAMA
Valtuutettu tarkastaja Authorized Inspector
Werkssachverständiger Inspecteur autorisé

RAUTARUUKKI STEEL
Tekninen palvelu Technical Services
Yhtiön nimi Company Name
RAUTARUUKKI OYJ

Osoite Address
PL 93, P.O. Box 93
FIN-92101 RAAHE, FINLAND
Kotipaikka Registered Office
HELSINKI

Puhelin Telephone
(08) 84911
+358 8 84911

Telekopio Telefax
(08) 849 2736
+358 8 849 2736
Y-tunnus Business ID
0113276-9

Teleksi Telex
32312 steel fi

RTX00

RAUTARUUKKI STEEL

AINESTODISTUS TEST REPORT
WERKSZEUGNIS RELEVE DE CONTROLE

EN 10 204-3.1.B (DIN 50049-3.1B)

12468 -01

Tilaaja Purchaser Besteller Acheteur	Vastaanottaja Consignee Empfänger Destinataire	Päivämäärä Date Datum Date
FELGUERA CONSTRUCCIONES MECANICAS S.A.	FELGUERA CONSTRUCCIONES MECANICAS S.A..	02.10.2001
Tilaus nro Order No. Bestellung Nr. Commande No.	Läh. merkki Shipping mark Versandzeichen Marque d'expédition	Valmistajan merkki Mark of the Manufacturer Zeichen des Herstellerwerkes Signe de producteur
API-1391		

Laatu Quality Werkstoff Nuance	Lisävaat. Add. requirem. Weitere Anforder Autres prescript.	Jatkuvavalettua happiteräst ä Oxygen steel, continuous casting Oxygenstahl, Stranggus Acier a l'oxygene, coulée continue
EN10028-3 P355NL2	EN 10029/1991 CLASS B	

Laatuselvitys Quality Specifications Qualitätspezification Spécification de qualité

WELDABLE FINE-GRAIN PRESSURE VESSEL STEEL

Positio Item Pos. Poste	Paksuus Thickness Dicke Epaiss.	Sulatus nro Cast No Schmelz-Nr. No coulée	Cekv Ceq Cäq Céq	Sulatusanalyysi % Chemical composition of cast % Chem. Zusammensetzung auf schmelzen % Composition Chimique de coulée %													
				C	SI	MN	P	S	AL	NB	V	TI	CU	CR	NI	MO	N
001	45.00	62363	.42	.17	.44	1.44	.015	.001	.034	.042	.009	.003	.019	0.02	0.03	.002	.006

CEKV=C+MN/6+(CR+MO+V)/5+(NI+CU)/15

Pos. Item Pos. Poste	Sulatus, k.erä nro Cast. test No Schmelze Prüf Nr. Coulee, Essai No	T-tila Cond Zust Etat	Vetokoe, Tensile test Zugversuch, Essai de traction				Taivutusk. Bend test Faltvers. Edepliage D = X t	Iskukoe, Impact test Kerbschlagversuch, Essai de resilience						Erikoiskokeet Special tests Sonderversuche Essais Speciaux
			K2	Re N/mm2 REH	Rm N/mm2	A % 5		K3	°C	1	2	3	Keskiarvo Average Mittelw. Moyenne	
001	62363 021 N	51		361	532	26		4B2	-50	183	163	133	160	
001	62363 022 N	51		383	536	27		4B2	-50	168	199	200	189	
001	62363 041 N	51		368	537	27		4B2	-50	198	200	164	187	
001	62363 042 N	51		357	533	27		4B2	-50	119	163	186	156	

CERTIFICADO N.º 10

K2: 51=BOTTOM,TRANSV.

K3: 4B2=CH-V/ISO-V(J/SQCM),10X10,BOTTOM T/4,TRANSV.

RAUTARUUKKI STEEL

Testaus ja tarkastus Testing and Inspection
Prüfung und Kontrolle Essais et Contrôle

Täten todistamme, että toimitus on tilausvahvistuksen mukainen.
We hereby certify that the material described above has been tested and complies with the terms of the order contract.
Es wird bestätigt, dass die Lieferung geprüft wurde und den Vereinbarungen bei der Bestellannahme entspricht.
Nous certifions que la livraison est conforme aux stipulations de l'acception de la commande.

02.10.2001 LV

MINNA VALKAMA

Valtuutettu tarkastaja Authorized Inspector Puh. (08) 84911
Werksachverständiger Inspecteur autorisé Telephone 358 8 84911

RTX97

AR kuumavalssattu as rolled warmgewalzt etat de laminage

N normalisoitu normalized normalgeglüht normalisé

NR normalisointi valssattu normalizing rolling normalisiert gewalzt laminage normalisant

CR kontrolloidusti valssattu controlled rolled temperaturgeregelt laminage controlé

TM termomek valssattu thermomech. treated thermomech. behandelt traitement thermomecanique

NT normalisointi + päästö normalizing + tempering normalisiert + anlassen normalisation + revenu

Q karkaistu quenched gehärtet tempé