Document ID:

431

Q2 LQXB Cryostat Final Assembly Traveler

333644 / Rev. B

Job No:	**248**
E + F Project/Task No.:	**300/1.1.1.6.2**
M + S Project/Task No.:	**300/1.1.1.6.2**

SCANNED
JAN 31 2005

Place This Side Down For Scanning!!!

LQXB03-0

Document ID:

431

Job No.:

248

Project/Task No.

300/1.1.1.6.2

Series:

LQXB

Serial No:

LQXB03

Rework ID:

0

Specification No.:

333644

Revision:

B

LQXB03-0

Fermi National Accelerator Laboratory
Batavia, IL 60510

LARGE HADRON COLLIDER
LQXB
CRYOSTAT FINAL ASSEMBLY TRAVELER

Reference Drawing(s):
Vacuum Vessel and Cryostat Assembly
(ME-390206)

Project/Task Number: 300/1.1.1.6.2

Released By: *John SzostakJohn Szostak* **Magnet/Device Series:** *LQXB*

Date Issued: *7/22/2003 1:23:46 PM* **Scanned Pages:** 45

Prepared by: J. Szostak

Title	Signature	Date
TD / E&F Process Engineering	*Bob Jensen* Bob Jensen / Designee	*7/18/03*
TD / LHC Production Supervisor	*Jim Rife* Jim Rife / Designee	*7/18/03*
TD / LHC Production Engineer Cryostat	*Tom Page* Tom Page / Designee	*7/18/03*
TD / LHC Project Engineer Cryostat	*Tom Nichol* Tom Nicol / Designee	*7/18/03*
TD / LHC Program Manager	*Jim Kerby* Jim Kerby / Designee	*7/18/03*

Revision Page

Revision	Step No.	Revision Description	TRR No.	Date
None	N/A	Initial Release	N/A	6/17/02
A	3.1	Removed Step. Not necessary.	1485	10/2/02
	3.2	Modified Step. Changed to "Add Insertion Rails per Vacuum Vessel Assembly (ME-390129)."		
	4.1	Modified Step. Added "Suspension System Adjusting Screw, M16 x 70mm SHCS and Washer" to the Parts table.		
	4.3	Modified step. "Install the Suspension System Adjusting Screws (MB-390039), M16 Screw and washer into the Vacuum Vessel to hold the Fixed Support Assembly in place. Coat all screw heads with Molybdenum disulfide prior to installation."		
	4.6	Modified step. "Install the Suspension System Adjusting Screws (MB-390039), M16 Screw and washer into the Vacuum Vessel to hold the Sliding Support Assemblies in place. Coat all screw heads with Molybdenum disulfide prior to installation."		
	4.11	Modified Step. "Slide the Suspension System over the Cold Mass and place on tooling. The Suspension system may be disassembled during this step. Record shim sizes and locations prior to disassembly." New Step 4.13.		
	5.1	Added Step. "Place the Cold mass assembly on the insertion rail system."		
	5.3	Added Step. "Install Cold mass Insulation per Cold mass Insulation Installation (ME-390302)."		
	5.5	Added Step. "Using Pipe Supports as a template, cut the blankets around the Pipe Support Feet and slit blankets circumferentially at the Pipe Supports."		
	5.6	Added Step. "Remove Pipe Supports and blankets. Wrap blankets in plastic bag to keep clean for later use. Label blankets as they are removed for later positioning."		
	5.7	Added Step. "Install Pipe Supports to same location as in step 5.4."		
	5.16	Added Step. "Weld the Pipe Support Gussets to the Cold mass per Q2 Piping Assembly (ME-390208)."		
	6.0	Modified Steps per Tom Page.		
	7.1	Modified Steps per Tom Page.		
	7.2	Modified Steps per Tom Page.		
	7.3	Modified Steps per Tom Page.		
	7.4	Modified Steps per Tom Page.		
	7.5	Modified Steps per Tom Page.		
B	4.1	Modified Step. Changed to "Label the IP End and the Non-IP End of the Vacuum Vessel with a temporary sticker or equivalent." per Jim Rife.	1539	7/17/03
	5.0	Added Note "**Note(s): Do not use a strap wrench on the pipes.**" per **DR No. HGQ-0394.**		

Ensure appropriate memos and specific instructions are placed with the traveler before issuing the sub traveler binder to production.

1.0 General Notes

1.1 All steps that require a sign-off shall include the Technician/Inspectors first initial and full last name.

1.2 No erasures or white out will be permitted to any documentation. All incorrectly entered data shall be corrected by placing a single line through the error, initial and date the error before adding the correct data.

1.3 All Discrepancy Reports issued shall be recorded in the left margin next to the applicable step.

1.4 All personnel performing steps in this traveler must have documented training for this traveler and associated operating procedures.

1.5 Personnel shall perform all tasks in accordance with current applicable ES&H guidelines and those specified within the step.

1.6 Cover the product/assembly with Green Herculite (Fermi stock 1740-0100) when not being serviced or assembled.

2.0 Parts Kit List

2.1 Attach the completed Parts Kit for this production operation to this traveler. Ensure that the serial number on the Parts Kit matches the serial number of this traveler. Verify that the Parts Kit received is complete.

John J. Strobata
Process Engineering/Designee

7/22/03
Date

TRC #1570 MORE DETAIL

3.0 Vacuum Vessel Preparation and Painting

3.1 Add Insertion Rails per Vacuum Vessel Assembly (ME-390129).

Technician(s) _____ Date 7/29/03

3.2 Leak Check the Vacuum Vessel Assembly (ME-390003) per ES-107240 and record results in table below.

Part No.		DETERMINATION OF DETECTABLE LEAK						
PART NO. 390129		SCALE UNITS BEFORE HELIUM PROBE	SCALE UNITS WHILE ENCLOSURE FLOODING	DETERMINATION OF MINIMUM DETECTABLE LEAK				
DATE TIME	OPERATOR'S LAST NAME			MDS	((Response - Bckgnd)	= Leak Value)		MDL
12-30-02	[illegible]	3c	3c	2	36c	3c	4.75E-8	2.88E-6

Inspector _____ Date 7-29.03

3.3 Prepare the outside of the Vacuum Vessel (ME-390003) for painting with Ethyl Alcohol (Fermi stock 1920-0550) and Kimwipes (Fermi stock 1660-2500) or equivalent.

Technician(s) _____ Date 7/29/03

3.4 Mask the Stainless Steel Components of the Vacuum Vessel for painting.

Technician(s) _____ Date 7/29/03

3.5 Prime the Vacuum Vessel using Rust-o-leum (Fermi stock 1825-4000).

Technician(s) _____ Date 7/29/03

3.6 Paint the Vacuum Vessel using Flambeau Red (Fermi stock 1825-3710).

Vacuum Vessel
(ME-390126)

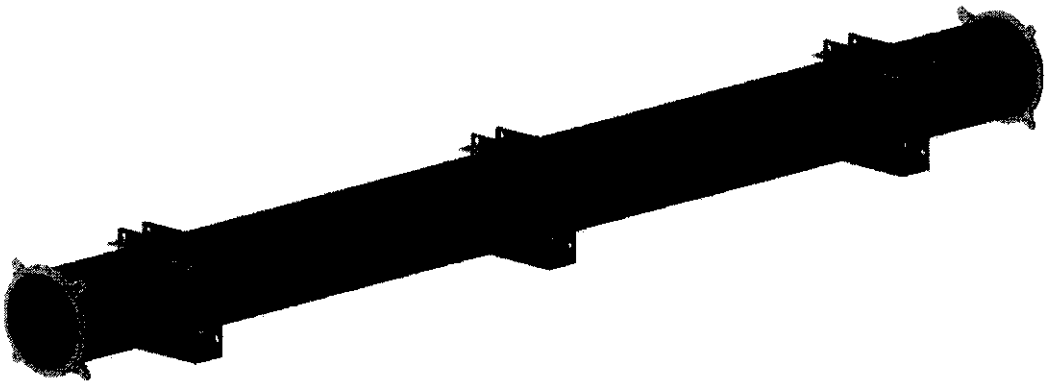

Technician(s) _____ Date 10-14-03

4.0 Suspension System

4.1 Clean the Suspension System with Ethyl Alcohol (Fermi stock 1920-0550) and Kimwipes (Fermi stock 1660-2500) or equivalent.

Part Name	Part Number	Quantity	Completed
Fixed Support Assembly	**(ME-390041)**	**1**	✓
Sliding Support Assembly	**(ME-390042)**	**2**	✓
Tie Bar Assembly	**(ME-390167)**	**4**	✓
Tie Bar Shim, .250"	**(ME-390118)**	**6**	✓
Tie Bar Shim, .093"	**(ME-390119)**	**6**	✓
Tie Bar Shim, .031"	**(ME-390120)**	**6**	✓
Suspension System Adjusting Screw	**(MB-390039)**	**12**	✓
M16 x 70mm SHCS	**(MA-393021)**	**12**	✓
Washer	**(MA-390377)**	**12**	✓

Label the IP End and the Non-IP End of the Vacuum Vessel with a temporary sticker or equivalent.

Technician(s) _____ Date 8/25/03

4.2 Insert the Fixed Support Assembly (ME-390041) into the vacuum vessel and position at the center support.

Technician(s) _____ Date 8/25/03

4.3 Install the Suspension System Adjusting Screws (MB-390039), M16 Screw and washer into the Vacuum Vessel to hold the Fixed Support Assembly in place. Coat all screw threads with Molybdenum disulfide prior to installation.

Technician(s) _____ Date 8/25/03

4.4 Adjust the Vertical and rotational alignment of the Supports using the Suspension System Adjusting Screws (MB-390039). Ensure all four screws are in contact with the Support and that Diametrically Opposing Support Lugs are equidistant from the Vacuum Vessel Wall.

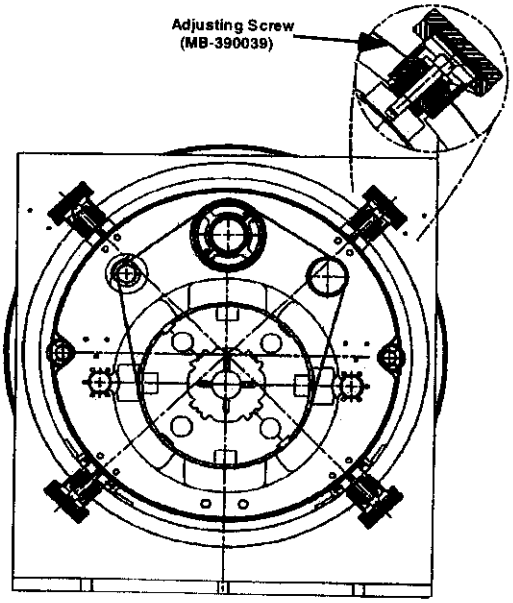

Technician(s) _____ Date 8/25/03

JR # HG0-021

4.5 Insert the Sliding Support Assemblies (ME-390042) in to the Vacuum Vessel and position at each of the outboard support sections.

Technician(s) _____ Date 8/25/03

4.6 Install the Suspension System Adjusting Screws (MB-390039), M16 Screw and washer into the Vacuum Vessel to hold the Fixed Support Assembly in place. Coat all screw threads with Molybdenum disulfide prior to installation.

[redacted]

Technician(s) _____ Date 8/25/03

4.7 Adjust the Vertical and rotational alignment of the Supports using the Suspension System Adjusting Screws (MB-390039). Ensure all four screws are in contact with the Support and that Diametrically Opposing Support Lugs are equidistant from the Vacuum Vessel Wall.

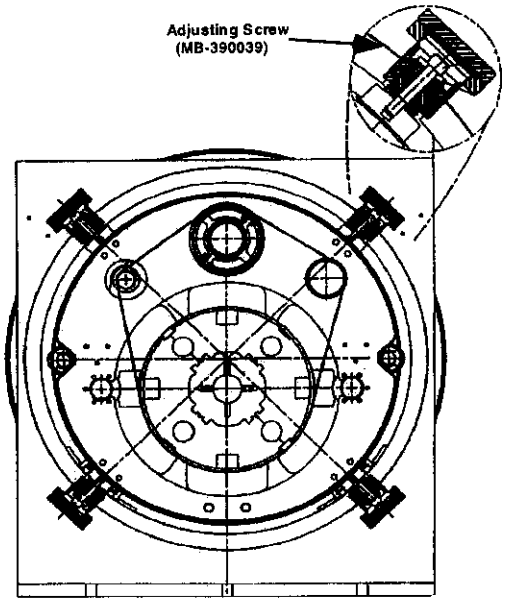

Technician(s) _____ Date 8/25/03

4.8 Assemble the Suspension System using the Fixed Support Assembly (ME-390041), the Sliding Support Assemblies (ME-390042) and the Tie Bar Assemblies (MC-390167). Insert Tie Bar Shims (MC-390118),(MB-390119) and (MB-390120) between the Sliding Support Assemblies (ME-390042) and the Tie Bar Assemblies (MC-390167) as required. (Reference drawing: ME-390310)

Technician(s) _____ Date 8/25/03

4.9 Label the IP End Support and the Non-IP End Support. (Writing on the G-11 Support is acceptable).

Technician(s) _____ Date 8/25/03

4.10 Loosen each Suspension System Adjusting Screw (MB-390039) 1/2 turn and remove the Suspension System from the Vacuum Vessel. Configure the Suspension Tooling for Q2 Assembly per (ME-364604). Place Suspension Assembly on the tooling and make necessary adjusts to the tooling.

Technician(s) _____ Date 8/25/03

4.11 Assemble the Outboard Suspension Mounting Brackets (MD-390280) to the Sliding Support Assemblies (outboard supports, ME-390042).

Technician(s) _____ Date 8/25/03

4.12 Assemble the Center Suspension Mounting Brackets (MD-390281) to the Sliding Fixed Assemblies (center support, ME-390041).

Technician(s) _____ Date 8/25/03

4.13 Slide the Suspension System over the Cold Mass and place on tooling. The Suspension system may be disassembled during this step. Record shim sizes and locations prior to disassembly.

Note(s):

Ensure that the Suspension System is configured properly to the Cold Mass with respect to the IP and Non-IP Ends.

Technician(s) _____ Date 8/26/03

X 4.14 Verify locking collars exist only at center support.

Lead Person _____ Date 8/26/03

4.15 Establish alignment between the Cold Mass and the Support system.

Technician(s) _____ Date 8/26/03

X 4.16 Verify the Alignment of the Cold Mass and the Support System.

Crew Chief _____ Date 8/26/03

4.17 Weld the Cold Mass to the Outboard Cold Mass Brackets as per (ME-390310).

Weldor(s) _____ Date 8/27/03

5.0 Piping Assembly

Note(s):

Do not use a Strap Wrench on the Pipes.

5.1 Place the Cold mass assembly on the insertion rail system.

Technician(s) _____ Date 8/27/03

5.2 Clean the Pipe Supports with Ethyl Alcohol (Fermi stock 1920-0550) and Kimwipes (Fermi stock 1660-2500) or equivalent.

Technician(s) _____ Date 8/28/03

5.3 Install Cold mass Insulation per Cold mass Insulation Installation (ME-390302).

Technician(s) _____ Date 8/28/03

5.4 Install the Pipe Supports (MD-390258)(Qty. 4) on the Cold Mass per (ME-390208).

Note(s):

A Tie Bar may be disconnected, if necessary, from the Fixed Support Assembly to install the central two pipe supports.

PIPE SUPPORT ASSEMBLY

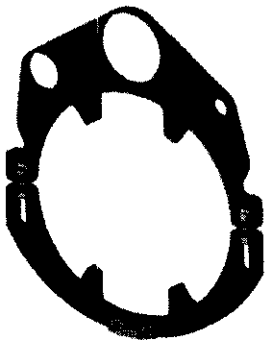

Technician(s) _____ Date 8/28/03

5.5 Using Pipe Supports as a template, cut the blankets around the Pipe Support Feet and slit blankets circumferentially at the Pipe Supports.

Technician(s) _____ Date 8/28/03

5.6 Remove Pipe Supports and blankets. Wrap blankets in plastic bag to keep clean for later use. Label blankets as they are removed for later positioning.

Technician(s) _____ Date 8/28/03

5.7 Install Pipe Supports to same location as in step 5.4.

Technician(s) _____ Date 8/28/03

Tie rod installation TRR# 1570

5.8 Clean the Heat Exchanger Outer Shell Pipe (MD-390145), Pumping Line Pipe (MB-390147) and the Cool Down Pipe (MB-390146) with Ethyl Alcohol (Fermi stock 1920-0550) and Kimwipes (Fermi stock 1660-2500) or equivalent.

Technician(s) _____ Date 8/28/03

5.9 Slide the Heat Exchanger Outer Shell Pipe (MD-390145), Pumping Line Pipe (MB-390147) and the Cool Down Pipe (MB-390146) through all 7 supports.

Note(s):

Ensure the cross over hole in the Heat Exchanger Pipe is lined up with the hole in the Cold Mass Center Tube.

Technician(s) _____ Date 8/28/03

5.10 Clean the Pumping Line Flanges (MB-390032), the Cool Down Line Flanges (MB-390033) and the Heat Exchanger Outer Shell Flanges (MB-390031) with Ethyl Alcohol (Fermi stock 1920-0550) and Kimwipes (Fermi stock 1660-2500) or equivalent.

Technician(s) _____ Date 8/28/03

5.11 Weld the Heat Exchanger Outer Shell Flanges (MB-390031), the Pumping Line Flanges (MB-390032) and the Cool Down Line Flanges (MB-390033) to the ends of the corresponding pipes.

Weldor(s) _____ Date 8/30/03

5.12 Clean the Cold Mass and the Retainer Clips (MA-390103) with Ethyl Alcohol (Fermi stock 1920-0550) and Kimwipes (Fermi stock 1660-2500) or equivalent.

Technician(s) _____ Date 8/28/03

5.13 Weld the Retainer Clips (MA-390103) to the Cold Mass Outer Shell as per the Pipe Support Assembly (ME-390087) or (ME-390208).

Weldor(s) _____ Date 8/30/03

5.14 Weld the Pipe Support Gussets to the Cold mass per Q2 Piping Assembly (ME-390208).

Weldor(s) _____ Date 8/30/03

5.15 Insert 4.5k Intercept Line Pipes per (ME-390208).

Technician(s) _____ Date 8/28/03

5.16 Clean the Heat Exchanger Connection (MC-390111) with Ethyl Alcohol (Fermi stock 1920-0550) and Kimwipes (Fermi stock 1660-2500) or equivalent.

L. Ruiz — Technician(s) — 8/28/03 — Date

5.17 Weld the Heat Exchanger Connection (MC-390111) to the Heat Exchanger Outer Shell and to the Cold Mass Center Tube per (ME-390208, Section F-F).

Weldor(s) — 8/30/03 — Date

5.18 Clean the Pumping Line Pipe Stop (MB-390149), (2 ea.) and the Cool Down Line Pipe Stop (MB-390150) (2 ea.) with Ethyl Alcohol (Fermi stock 1920-0550) and Kimwipes (Fermi stock 1660-2500) or equivalent.

Technician(s) — 8/30/03 — Date

5.19 Weld the Pumping Line Pipe Stop (MB-390149), (2 ea.) and Cool Down Line Pipe Stop (MB-390150) (2 ea.) on the Pumping Line and Cool Down Lines.

Weldor — 8/30/03 — Date

TRR#1570 TRR NEEDED

5.20 Weld the fixed collar to the 4.5k Intercept Line per (390208).

~~Technician(s)~~ WELDOR — 8/30/03 — Date

5.21 Clean all parts on Drawing (ME-390143).

Technician(s) — 10/13/03 — Date

5.22 Assemble Corrugated Tube Supports (MB-390028) and Restrictors (MB-390029) to the Heat Exchanger Corrugated Tube per (ME-390143).

Technician(s) _____ Date 10/13/03

5.23 Slide the Corrugated Tube Assembly (ME-390143) into the Heat Exchanger Outer Shell per (ME-390142).

Technician(s) _____ Date 10/13/03

5.24 Pressure test the Cold Mass Assembly at 375 psi Nitrogen per Section 5034 of the Fermilab ES&H Manual and UG-100 of the Code.

Warning:

The test is to be performed after normal working hours and only personnel directly involved with the test will be present.

Inspector _____ Date 9/3/03

5.25 Leak Check the Cold Mass Assembly. (This will include the Exchanger Outer Shell).

Part No.	DETERMINATION OF DETECTABLE LEAK						
CxD MASS/DX303-0	M.D.S. ÷ ((Response – Background) ÷ Leak value) = MDL						
OPERATOR'S LAST NAME	SCALE UNITS BEFORE HELIUM PROBE	SCALE UNITS WHILE ENCLOSURE FLOODING	MDS	Response	Background	Leak Value	MDL
9-10-03 GAu	28X1	28X1	2	48X5	28X1	3.85 xE-8	3.6 xE-10

Inspector _____ Date 9-10-03

5.26 Leak Check the Cool Down Line.

Part No. EXCHANGER	DETERMINATION OF DETECTABLE LEAK						
	M.D.S. ÷ ((Response – Background) ÷ Leak value) = MDL						
OPERATOR'S LAST NAME	SCALE UNITS BEFORE HELIUM PROBE	SCALE UNITS WHILE ENCLOSURE FLOODING	MDS	Response	Background	Leak Value	MDL
GAW	4041	4041	2	6245	4041	3.85 x E-8	2.85 x E-10

Inspector

9-11-05
Date

5.27 Leak Check the Pumping Line.

Part No. OUTER SHELL	DETERMINATION OF DETECTABLE LEAK						
	M.D.S. ÷ ((Response – Background) ÷ Leak value) = MDL						
OPERATOR'S LAST NAME	SCALE UNITS BEFORE HELIUM PROBE	SCALE UNITS WHILE ENCLOSURE FLOODING	MDS	Response	Background	Leak Value	MDL
GAW	4041	4041	2	6245	4041	3.85 x E-8	2.85 x E-10

Inspector

9-11-05
Date

6.0 Shield Assembly

6.1 Install the Cold mass MLI Blankets per (ME-390302) and in the same position as Step 5.6.

Technician(s) _____ Date 9/15/03

6.2 Lift the Cold mass Assembly and place the Center Section (ME-390164) and End Sections (ME-390162) on the Insertion Rails. Lower the Cold mass back onto the rails ensuring the holes in the Shield Sections line up with Support Rollers.

Technician(s) _____ Date 9/16/03

6.3 Insert the Mid Sections (ME-390163) and the Support Bands (MD-390083).

Technician(s) _____ Date 9/16/03

6.4 Assemble the bottom half of the shield. Leave all bolts loose. Spray all screw threads with Molybdenum.

Lower Shield Section
(ME-390082)

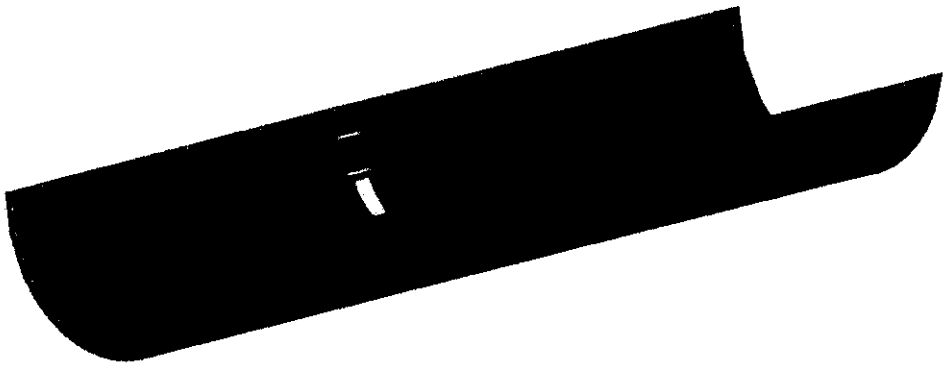

Technician(s) _____ Date 9/17/03

6.5 Assemble the Cooling Tubes (MD-390165) to the Bottom Half of the Shield.

Technician(s) _____ Date 9/17/03

6.6 Lift the Cold mass and place the Shield Inner and Outer MLI Blankets (ME-390313 & ME-390314) onto the insertion Rails in the correct orientation.

Note(s):
Place the Outer Blanket (ME-390314) on the Rails first.

Technician(s) _____ Date 9/17/03

6.7 Lower the Cold mass onto the rails. Ensure the slits in the blankets line up with Support Rollers.

Technician(s) _____ Date 9/17/03

6.8 Cut and install the pipe MLI blankets per Q2 Piping Insulation (ME-390306).

Technician(s) _____ Date 9/17/03

6.9 Install the Upper Shield per Q2 Thermal Shield Assembly (ME-390161). Spray all screw threads with Molybdenum.

Technician(s) _____ Date 9/18/03

6.10 Install the Shield Blankets (ME-390313 & ME-390314). Cutouts will have to be made for the Upper Support Lugs.

Technician(s) _____ Date SW 9/18/03

7.0 Cold Mass Insertion into the Vacuum Vessel

7.1 Install Green Putty between the Vacuum Vessel and the Insertion Rails.

Technician(s) _____ Date 10-10-03

7.2 Install the Cold mass Pull-in tooling.

Technician(s) _____ Date 10-10-03

7.3 Mount the Pneumatic Winch to floor on the West side of the Vacuum Vessel.

Technician(s) _____ Date 10-10-03

7.4 Connect the cable to the Pull-in tooling.

Technician(s) _____ Date 10-10-03

7.5 Pull the Cold mass Assembly into the Vacuum Vessel.

Technician(s) _____ Date 10/10/03

7.6 When the Cold Mass is fully inserted, install the Suspension System Adjusting Screws (MB-390039).

Technician(s) _____ Date 10-13-03

7.7 Adjust the Suspension System Adjusting Screw (MB-390039) as needed to center the Cold mass in the Vacuum Vessel.

Technician(s) _____ Date 10-13-03

7.8 Install the Conflat flanges with copper gaskets on the Vacuum Vessel as per the General Assembly (ME-390000).

Technician(s) _____ Date _____

TRR#1570 ~~HAS BEEN~~ ~~TO COMPLETE~~ LQR

TRR NEEDED HERE! THIS IS DONE IN ZB#1 TRR#1570

ELECTRICAL SHEETS ADDED TO THIS TRAVELER AFTER STEP 7.8 !
SNG
10/13/03

DR# HGQ0432
VOLTAGE TAP VTV1 IS BROKEN ON Q2B END. THE Q2-Q3 CONNECTOR !
SNG 10/13/03

TEST BOX
NON-WORKING CONNECTIONS
TaQ21_V- TO 20
TbQ21_V- TO 24

8.0 Production Complete

8.1 Process Engineering verify that the LHC Cryostat Assembly Traveler (5520-TR-333644) is accurate and complete. This shall include a review of all steps to ensure that all operations have been completed and signed off. Ensure that all Discrepancy Reports, Nonconformance Reports, Repair/Rework Forms, Deviation Index and dispositions have been reviewed by the Responsible Authority for conformance before being approved.

Comments:

_____
_____
_____
_____
_____
_____
_____

J. Ayostak
Process Engineering/Designee

JAN 3 1 2005
Date

Final Electrical Added per TRR #1586 99A

15.0 Final Electrical Inspection

15.1 Perform an electrical inspection on each of the individual Quadrants and the Cold Masses. Refer to the Valhalla and Leader Free Standing Coil Measurement Procedure (ES-292306).

Note(s):

Ensure that all measurements are recorded correctly, and have the proper value and symbol (i.e., mΩ, mH, etc.).

Valhalla 4300B settings:

Test current	_____	Off (not testing)
Power	_____	On
Full scale voltage	_____	2V
Amp selector knob	_____	1A
Temperature compensator	_____	On
Test current	_____	On (testing)

Hp 4284:

Function	_____	"Ls-Q" selected

Record the Serial Number of the test equipment used.

Valhalla 32-858

HP 4284 2848J00912

HP3457A 2703A11653

Q2a

(Q2a) Resistance			Total
Serial Numbers	Nominal		560 to 585 mΩ
VTC2Q2A / VTDQ2A	Quadrant 1		5790 mΩ
VTC2Q2A / VTEQ2A	Quadrant 2		5793 mΩ
VTDQ2A / VTA2Q2A	Quadrant 3		5845 mΩ
VTB1Q2A / VTEQ2A	Quadrant 4		.5845 mΩ
Total Cold Mass	Nominal	2.305 Ω	500 ~~2.310~~ 2.33 Ω

(Q2a) Inductance			Total
Connections	Nominal		2.880 to 2.935 mH
VTC2Q2A VTDQ2A	Quadrant 1		3.3[illegible] mH
VTC2Q2A VTEQ2A	Quadrant 2		3.37941 mH
VTDQ2A VTA2Q2A	Quadrant 3		3.[illegible] mH
VTB1Q2A VTEQ2A	Quadrant 4		3.35629 mH
Total Cold Mass	Nominal	13.3376 mH	13.4498 mH

(Q2a) Q-Factor			Total
Connections	Nominal		4.5 to 5.2
VTC2Q2A VTDQ2A	Quadrant 1		3.82
VTC2Q2A VTEQ2A	Quadrant 2		3.79
VTDQ2A VTA2Q2A	Quadrant 3		3.82
VTB1Q2A VTEQ2A	Quadrant 4		3.82
Total Cold Mass	Nominal	5.036	3.82

Technician(s) Date 10/13/03

H2A Q2A
H1A Q2A

(Q2a) Resistance Test	Limit	Actual Measurement	
(Q2a) Heater Circuit A	18.20 to 21 Ω	19.9175 Ω	HP
(Q2a) Heater Circuit B	18.20 to 21 Ω	20.1388 Ω	HP

H2B Q2A
H1B Q2A

Technician(s) Date 10/13/03

Q2b

(Q2b) Resistance			Total
CONNECTIONS	Nominal		560 to 585 mΩ
VTDQ2B VTC2Q2B	Quadrant 1		576.3 mΩ
VTC2Q2B VTEQ2B	Quadrant 2		576.4 mΩ
VTA1Q2B VTDQ2B	Quadrant 3		576.6 mΩ
VTB1Q2B VTEQ2B	Quadrant 4		576.9 mΩ
Total Cold Mass	Nominal	2.305 Ω	2.310 Ω

(Q2b) Inductance			Total
CONNECTIONS	Nominal		2.880 to 2.935 mH
VTDQ2B VTC2Q2B	Quadrant 1		3.38218 mH
VTC2Q2B VTEQ2B	Quadrant 2		3.38752 mH
VTA1Q2B VTDQ2B	Quadrant 3		3.35952 mH
VTB1Q2B VTEQ2B	Quadrant 4		3.36927 mH
Total Cold Mass	Nominal	13.3376 mH	13.4891 mH

(Q2b) Q-Factor			Total
CONNECTIONS	Nominal		4.5 to 5.2
VTDQ2B VTC2Q2B	Quadrant 1		3.89
VTC2Q2B VTEQ2B	Quadrant 2		3.84
VTA1Q2B VTDQ2B	Quadrant 3		3.79
VTB1Q2B VTEQ2B	Quadrant 4		3.87
Total Cold Mass	Nominal	5.036	3.86

A Gowed
Technician(s)

10/13/03
Date

TEMP @ TIME OF MEASUREMENT 70.9°F

H2A Q2B
H1A Q2B

Heater Resistance			
(Q2b) Resistance Test	Limit	Actual Measurement	
(Q2b) Heater Circuit A	18.20 to 21 Ω	19.7313 Ω	HP
(Q2b) Heater Circuit B	18.20 to 21 Ω	19.5764 Ω	HP

H1BQ2B
H2BQ2B

Technician(s)

10-13-03
Date

Instrumentation Q2a			
Component	Wire Labels	Resistance	
¼ Coil Tap	VTdQ2a	.5890	
¼ Coil Tap	VTcQ2a	1746.2	
½ Coil Tap	VTc1Q2a	1167.4	
½ Coil Tap	VTc2Q2a	1167.4	
Lead Tap	VTa1Q2a	2.321	
Lead Tap	VTb1Q2a	2.323	
Lead Tap	VTa2Q2a	2.320	
Lead Tap	VTb2Q2a	2.326	
RTD (Non-LE)	TaQ2a	72.255	HP
RTD (Non-LE)	TbQ2a	66.983	HP
Warm-up Heater (LE)	W1aQ2a (toward end) W2aQ2a (toward middle)	18.1506	HP
Warm-up Heater (Non-LE)	W1bQ2a (toward end) W2bQ2a (toward middle)	17.7959	HP

Technician(s)

10/13/03
Date

TEMP @ TIME OF MEASUREMENT: 70.9 °F

Instrumentation Q2b			
Component	**Wire Labels**	**Resistance**	
¼ Coil Tap	VTdQ2b	.5780	
¼ Coil Tap	VTeQ2b	1729.7	
½ Coil Tap	VTc1Q2b	1153.6	
½ Coil Tap	VTc2Q2b	1153.6	
Lead Tap	VTa1Q2b	~~1.8~~ 2.311	
Lead Tap	VTb1Q2b	2.307	
Lead Tap	VTa2Q2b	2.311	
Lead Tap	VTb2Q2b	2.307	
RTD	TaQ2b	70.908	HP
RTD	TbQ2b	69.183	HP
Warm-up Heaters (LE)	W1aQ2b (toward end) W2aQ2b (toward middle)	17.242	HP
Warm-up Heaters (Non-LE)	W1bQ2b (toward end) W2bQ2b (toward middle)	17.7941	HP

A Howard
Technician(s)

10/13/03
Date

MCBX Corrector Coil Taps		
Component	**Wire Labels**	**Resistance**
Tap 1	VTH2	2405
Tap 2	VTV2	1945

Technician(s)

10-12-03
Date

TRR# 1586

XXX 15.2 Hipot according to table below. Hipot to 600V. Maximum leakage is 3μA. Hipot using pins in Hypertronics Connectors. Isolate the Hypertronics Connectors in gas Helium (He) at room temperature during Hipot.

Hipot Heaters to Coil and Ground

High Potential	Grounded	Floating	Leakage
All Strip Heaters	Coils, Yoke, Q1 Instrumentation Bus, Lead and Corrector Coil Busses.	RTD's and Warm-up Heaters	

Hipot Coil to Heaters and Ground

High Potential	Grounded	Floating	Leakage
All Coils	Strip Heaters, Yoke, Q1 Instrumentation Bus, 8kA and 5kA Lead Busses and Corrector Coil Busses.	RTD's and Warm-up Heaters	

N/A

Technician(s) _____ Date _____

XXX 15.3 Verify that the results in Step 15.0 are acceptable.
Approved for next Assembly Procedure.

N/A

Responsible Authority/Physicist _____ Date _____

TD/ENGINEERING & FABRICATION

PARTS KIT REQUEST

IMPORTANT NOTES:
1) MAGNET NUMBER MUST BE FILLED IN.
2) ONLY ONE FORM PER MAGNET.
3) PARTS COORDINATOR OR DESIGNEE MUST SIGN THIS FORM.
4) MATERIAL CONTROL WILL ISSUE PARTS AND RECORD ROUTING NUMBER.
5) ANY QUANTITIES NOT AVAILABLE WILL HAVE COMMENTS RETURNED TO THE PARTS COORDINATOR FOR REVIEW.

MAGNET NUMBER: LQXB03

RELEASED BY

PRODUCTION SIGNATURE: J. Szostak x2003

TODAYS DATE: 9-Jun-03

NEED DATE: 20-Jun-03

DELIVER TO_____ICB

BUDGET CODE: LCI

PROJECT NUMBER: 300
TASK NUMBER: 1.1.1.3.3

ISSUE VERIFICATION

MATERIAL CONTROL SIGNATURE: Marsha Schmidt

DATE ISSUED TO STOCKROOM: 6/9/03

THIS KIT LIST IS FOR

ME-390206	A	Q2 CRYOSTAT ASSEMBLY (GENERAL)

PART NUMBER	REV	DESCRIPTION	REQUIRED QTY/ASS'Y		MATERIAL CONTROL: QTY FILLED OUT BY STOCK ROOM: ISSUED	ROUTE FORM	NOT AVAIL	FILLED OUT BY EXPEDITER: DATE AVAIL	COMMENTS TO PRODUCTION MANAGER	PROD VERIFY PART	SUPT. VERIFY PART
390039	B	ADJUSTING SCREW	12	EA	12	78885		6/9/03	IB4 Bin - 231		
390129	D	VACUUM VESSEL ASSEMBLY	1	EA					CDF - 7		
393031	*	SPRING PIN, 8 x 26	10	EA	10	77849			IB4 Bin - 180		
390408	A	END GUIDE RAIL	2	EA	2	78141			R16.5 - 14		
390406	A	CENTER GUIDE RAIL	4	EA	4	78129			R16.5 - 27		
390211	B	TARGET HOLDER	12	EA	12	78751			R10.1.1 - 106		
390374	*	BLANK, NON ROTATABLE CONFLAT FLANGE, 4.62" OD	12	EA	12	78487			IB4 Bin - 227 B.34		
390375	*	COPPER GASKET	12	EA	12	78429			IB4 Bin - 334		
390376	*	BOLT SET, HEX HEAD 5/16 - 24 x 1.25 LG.	120	EA	120	72306			IB4 Bin - 2285		
390377	*	WASHER, 0.656" ID x 1.38" OD x 0.13 THK., S.S.	12	EA	12	77806			IB4 Bin - 231		
390426	*	TAYLOR HOBSON SOCKET CUP	12	EA	12	77884			R13.5 - 236		
393021	*	M16-2 x 70mm HEX SHSC, S.S.	12	EA	12	77840			IB4 Bin - 276		
393024	*	M6 FLAT WASHER 18-8 S.S.	48	EA	48	78041			IB4 Bin - 936		
393036	*	M10-1.5 x 25mm HEX SHSC, S.S.	36	EA	36	77849			IB4 Bin - 728		
393045	*	M6-1.0 x 35mm HEX SHCS 18-8 S.S.	24	EA	24	78886			IB4 Bin - 476		
393048	*	M8 x 30mm SPRING PIN 18-8 S.S.	12	EA	12	78987			IB4 Bin - 238		
390491	*	75MM DIA. FLANGE COVER	6	EA	6	78825			IB4 Bin - 255		
390492	*	114MM DIA. FLANGE COVER	4	EA	4	78836			IB4 Bin - 245		
390493	*	134MM DIA. FLANGE COVER	8	EA	8	78837			IB4 Bin - 350		
390494	*	201MM DIA. FLANGE COVER	2	EA	2	78834			IB4 Bin - 103		
390495	*	ALIGNMENT FIDUCIAL COVER	12	EA	12	79957			IB4 Bin - 330		

RETURN THIS COMPLETED PARTS KIT REQUEST WITH THE ISSUED PARTS TO THE PARTS COORDINATOR.

7/11/03 STOCKROOM SIGNATURE AND DATE

TRAVELER NO. TR-333644

KIT IS COMPLETE (PARTS COORDINATOR SIGNATURE): John J. Szostak BADGE # 02943C DATE 7/14/03

TD/ENGINEERING & FABRICATION

PARTS KIT REQUEST

IMPORTANT NOTES:
1) MAGNET NUMBER MUST BE FILLED IN.
2) ONLY ONE FORM PER MAGNET.
3) PARTS COORDINATOR OR DESIGNEE MUST SIGN THIS FORM.
4) MATERIAL CONTROL WILL ISSUE PARTS AND RECORD ROUTING NUMBER.
5) ANY QUANTITIES NOT AVAILABLE WILL HAVE COMMENTS RETURNED TO THE PARTS COORDINATOR FOR REVIEW.

MAGNET NUMBER: LQXB03

RELEASED BY

PRODUCTION SIGNATURE: J. Szostak x2003

TODAYS DATE: 9-Jun-03

NEED DATE: 20-Jun-03

DELIVER TO _____ ICB

BUDGET CODE: LCI

PROJECT NUMBER: 300
TASK NUMBER: 1.1.1.3.3

ISSUE VERIFICATION

MATERIAL CONTROL SIGNATURE: Marsha Schmidt

DATE ISSUED TO STOCKROOM: 6/9/03

THIS KIT LIST IS FOR

ME-390161	A	Q2 THERMAL SHIELD ASSEMBLY

PART NUMBER	REV	DESCRIPTION	REQUIRED QTY/ASS'Y		MATERIAL CONTROL: QTY FILLED OUT BY STOCK ROOM: ISSUED	ROUTE FORM	NOT AVAIL	FILLED OUT BY EXPEDITER: DATE AVAIL	COMMENTS TO PRODUCTION MANAGER	PROD VERIFY PART	SUPT. VERIFY PART
390083	A	SUPPORT BAND	8	EA	8	N/A		6/9/03	P/N - 128		
390086	*	RETAINER	16	EA	16	77131			IB4 Bin - 402		
390103	*	RETAINING CLIP	16	EA	16	76785			IB4 Bin - 328		
390162	*	END SECTION	4	EA	4	N/A			P/N - 24		
390163	*	MID SECTION	4	EA	4	N/A			P/N - 24		
390164	*	CENTER SECTION	2	EA	2	N/A			NT03296 - 12		
390165	*	COOLING TUBE WELDMENT	2	EA	2	N/A			P/N - 12		
390313	*	Q2 SHIELD MLI INNER BLANKET	1	EA	1	N/A			P/N - 7		
390314	*	Q2 SHIELD MLI OUTER BLANKET	1	EA	1	N/A			P/N - 7		
390316	A	COOLING PIPE BRACKET	4	EA	4	77195			IB4 Bin - 100		
390317	*	COOLING PIPE CLAMP	8	EA	8	77196			IB4 Bin - 207		
390373	*	ALUMINUM SPACER	64	EA	64	76874			IB4 Bin - 1072		
390378	*	RETAINING WASHER	360	EA	360	79002			IB4 Bin - 6240		
393018	*	M8 x 25mm SHCS, S.S.	8	EA	8	76747			IB4 Bin - 205		
393019	*	M8 x 45mm SHCS, S.S.	8	EA	8	76748			IB4 Bin - 84		
393023	*	M8 HEX NUT, S.S.	16	EA	16	78890			IB4 Bin - 286		
393025	*	M8 FLAT WASHER, S.S.	16	EA	16	78148			IB4 Bin - 148		
393027	*	M8 LOCK WASHER, S.S.	16	EA	16	78199			IB4 Bin - 171		
393028	*	M5 x 16mm BUTTON HEAD CAP SCREW	360	EA	360	76826			IB4 Bin - 6725		

RETURN THIS COMPLETED PARTS KIT REQUEST WITH THE ISSUED PARTS TO THE PARTS COORDINATOR.

7/11/03 : STOCKROOM SIGNATURE AND DATE

TRAVELER NO. TR-333644

KIT IS COMPLETE (PARTS COORDINATOR SIGNATURE): John J. Szostak BADGE # 82947C DATE 7/14/03

TD/ENGINEERING & FABRICATION

PARTS KIT REQUEST

IMPORTANT NOTES:
1) MAGNET NUMBER MUST BE FILLED IN.
2) ONLY ONE FORM PER MAGNET.
3) PARTS COORDINATOR OR DESIGNEE MUST SIGN THIS FORM.
4) MATERIAL CONTROL WILL ISSUE PARTS AND RECORD ROUTING NUMBER.
5) ANY QUANTITIES NOT AVAILABLE WILL HAVE COMMENTS RETURNED TO THE PARTS COORDINATOR FOR REVIEW.

MAGNET NUMBER: LQXB03

RELEASED BY

PRODUCTION SIGNATURE: J. Szostak x2003

TODAYS DATE: 9-Jun-03

NEED DATE: 20-Jun-03

DELIVER TO_____ICB

BUDGET CODE: LCI

PROJECT NUMBER: 300
TASK NUMBER: 1.1.1.3.3

ISSUE VERIFICATION

MATERIAL CONTROL SIGNATURE: [signature]

DATE ISSUED TO STOCKROOM: 6/9/03

THIS KIT LIST IS FOR

ME-390208	A	Q2 INTERNAL PIPING ASSEMBLY

PART NUMBER	REV	DESCRIPTION	REQUIRED QTY/ASS'Y		MATERIAL CONTROL: QTY FILLED OUT BY STOCK ROOM: ISSUED	ROUTE FORM	NOT AVAIL	FILLED OUT BY EXPEDITER: DATE AVAIL	COMMENTS TO PRODUCTION MANAGER	PROD VERIFY PART	SUPT. VERIFY PART
390028	*	CORRUGATED TUBE SUPPORT	8	EA	8	77647			T9,2 - 164		
— 390029	A	CORRUGATED TUBE RESTRICTER	2	EA	2	77724			R9,S1,L4 - 66		
390031	B	HEAT EXCHANGER OUTER SHELL END FLANGE	2	EA	2	77209			IB4 Bin - 86		
390032	B	PUMPING LINE END FLANGE	2	EA	2	77210			IB4 Bin - 83		
390033	B	COOL DOWN LINE END FLANGE	2	EA	2	77208			IB4 Bin - 67		
390111	A	HEAT EXCHANGER TO COLD MASS CONNECTOR	1	EA	1	76268			R2,S1,L5 - 7		
390136	*	TIE BAR RETAINING CLAMP	8	EA	8	77132			IB4 Bin - 125		
390145	*	Q2 OUTER SHELL TUBE	1	EA	1	77992			PIN - 8		
390146	A	Q2 COOL DOWN LINE TUBE	1	EA	1	77651			PIN - 7		
390147	A	Q2 PUMPING LINE TUBE	1	EA	1	77652			PIN - 7		
390149	*	PUMPING LINE PIPE STOP	2	EA	2	77133			IB4 Bin - 53		
390150	*	COOL DOWN LINE PIPE STOP	2	EA	2	77134			IB4 Bin - 54		
390204	*	Q2 4.5K INTERCEPT LINE TUBE	3	EA	3	N/A			PIN - 28		
390258	A	Q2 PIPE SUPPORT ASSEMBLY	4	EA	4	76618			PIN - 28		
390305	*	COLD MASS MLI CENTER BLANKET	1	EA	1	N/A			PIN - 7		
390307	*	PIPING MLI END BLANKET	2	EA	2	N/A			PIN - 14		
390308	*	PIPING MLI MID BLANKET	2	EA	2	N/A			PIN - 14		
390379	A	INTERCEPT LINE PIPE STOP	6	EA	6	73844			IB4 Bin - 204		
390394	*	Q2 CORRUGATED TUBE WELDMENT	1	EA	1	78456			PIN - 7		
390452	A	PIPE SUPPORT BRACE	4	EA	4	79843			R1,S3,L7 - 28		
393017	*	M6 x 45mm HEX SHCS, S.S.	8	EA	8	77846			IB4 Bin - 84		
393022	A	M6 HEX NUT, S.S.	8	EA	8	78236			IB4 Bin - 86		
393024	*	M6 FLAT WASHER, S.S.	8	EA	8	78891			IB4 Bin - 93		
393026	*	M6 LOCK WASHER, S.S.	8	EA	8	77850			IB4 Bin - 97		

RETURN THIS COMPLETED PARTS KIT REQUEST WITH THE ISSUED PARTS TO THE PARTS COORDINATOR.

[signature] 7/11/03 : STOCKROOM SIGNATURE AND DATE

TRAVELER NO. TR-333644

KIT IS COMPLETE (PARTS COORDINATOR SIGNATURE): [signature] BADGE # 02943C DATE 7/14/03

TD/ENGINEERING & FABRICATION

PARTS KIT REQUEST

IMPORTANT NOTES:
1) MAGNET NUMBER MUST BE FILLED IN.
2) ONLY ONE FORM PER MAGNET.
3) PARTS COORDINATOR OR DESIGNEE MUST SIGN THIS FORM.
4) MATERIAL CONTROL WILL ISSUE PARTS AND RECORD ROUTING NUMBER.
5) ANY QUANTITIES NOT AVAILABLE WILL HAVE COMMENTS RETURNED TO THE PARTS COORDINATOR FOR REVIEW.

* This page was printed & issued by mistake. All parts in this Kit are in TR-333643 Module Assembly's Parts Kit.

DELIVER TO_____ICB

BUDGET CODE: LCI

PROJECT NUMBER: 300
TASK NUMBER: 1.1.1.3.3

RELEASED BY

MAGNET NUMBER: LQXB03

PRODUCTION SIGNATURE: J. Szostak x2003

TODAYS DATE: 9-Jun-03

NEED DATE: 20-Jun-03

ISSUE VERIFICATION

MATERIAL CONTROL SIGNATURE: Marsha Schmidt

DATE ISSUED TO STOCKROOM: 6/9/03

THIS KIT LIST IS FOR

ME-390309	A	Q2 COLD MASS WELDED ASSEMBLY

PART NUMBER	REV	DESCRIPTION	REQUIRED QTY/ASS'Y	MATERIAL CONTROL: QTY FILLED OUT BY STOCK ROOM: ISSUED	ROUTE FORM	NOT AVAIL	FILLED OUT BY EXPEDITER: DATE AVAIL	COMMENTS TO PRODUCTION MANAGER	PROD VERIFY PART	SUPT. VERIFY PART
369655	*	COLD MASS ASSEMBLY	ICB HAS				—			
369802	*	INSULATED BEAM TUBE	ICB HAS				—			
390112	*	CENTER BODY TUBE	1 EA	1	78283		6/9/03	IB4 - 6 SITE-38		
390197	B	IP END DOME WELDMENT	1 EA	1	N/A			P/N - 6		
390203	*	MCBX CORRECTOR MOUNTING SPACER	4 EA	4	77194			IB4 Bin - 28		
390228	*	MCBX CORRECTOR MTG FLAT WASHER	4 EA	4	77130			R1,S3,L2 - 32		
390230	A	TRANSPORT RESTRAINT ADJ SCREW	4 EA	4	76664			IB4 Bin - 24		
390248	*	SCREW FOR CORRECTOR 1/2-20 x 3.5 SILVER PLATED	4 EA	4	74623			IB4 Bin - 38		
390253	A	NON IP END DOME WELDMENT	1 EA	1	78330			P/N - 6		
390300	B	BEAM TUBE FLANGE	2 EA	2	77028			R10,1,2 - 48		
390312	*	MCBX CORRECTOR MAGNET WELDMNENT	ICB HAS				—			
390482	*	SHIM, 0.05 (0.002")	4 EA	4	79123		6/9/03	R2,S2,L4 - 149		
390483	*	SHIM, 0.13 (0.005")	4 EA	4	79124			R2,S2,L4 - 152		
390484	*	SHIM, 0.25 (0.010")	4 EA	4	79125			R2,S2,L4 - 151		
390485	*	SHIM, 0.38 (0.015")	4 EA	4	79126			R2,S2,L4 - 140		
393029	*	1/4-28 x 25.4 HEX SHCS 18-8 S.S.	16 EA	16	77851			IB4 Bin - 152		
393030	*	#10-32 x 4.78 CUP POINT SET SCREW 18-8 S.S.	8 EA	8	77839			IB4 Bin - 76		

RETURN THIS COMPLETED PARTS KIT REQUEST WITH THE ISSUED PARTS TO THE PARTS COORDINATOR.

7/16/03 STOCKROOM SIGNATURE AND DATE

TRAVELER NO. TR-333644

KIT IS COMPLETE (PARTS COORDINATOR SIGNATURE):_____ BADGE #_____ DATE

Traveler Title:	Specification No:	Revision:	DR No:
Q2 LQXB Cryostat Final Assembly Traveler	5520-TR-333644	B	HGQ-0421

Step No:	Drawing No:	Routing Form No:	Serial No:	Rework ID:
4.5	390206		LQXB03	0

Discrepancy Description:

Steps in the interior of the vacuum vessel at the support sections. These steps are in such locations that they may hinder the installation (rolling in) of the module assembly.

Originator: Jim Rife

Date: 7/30/2003

Cause of Nonconformance:

Mismatch in ID's of vacuum vessel support section and tube section.

Responsible Authority: Thomas Page

Date: 8/6/2003

Disposition:

Grind the step to a smooth finish so that the rollers will not be obstructed when rolling into the vacuum vessel.

Responsible Authority: Thomas Page

Date: 8/6/2003

Corrective Action to Prevent Recurrence:

None.

Responsible Authority: Thomas Page

Date: 8/6/2003

Corrective Action/Disposition Verified By: John Szostak

Date: 8/7/2003

Will Configuration be affected?: ☐ YES ☑ NO

Identified problem area:

☑ Material ☐ Manpower ☐ Method ☐ Machine ☐ Measurement

Reviewed By: Bob Jensen

Date: 8/11/2003

LQXB03 Leak Check Tickets

PART NO.	DATE TIME	OPERATOR'S LAST NAME	SCALE UNITS BEFORE HELIUM PROBE	SCALE UNITS WHILE ENCLOSURE FLOODING	DETERMINATION OF MINIMUM DETECTABLE LEAK: MDS	(Response - Bckgnd)	Leak Value	MDL	
390197B	6-24-02	Jmanc	22	22	2	220	22	2.47E-8	2.49E-10
390198A	5-7-02	Jmanc	62	62	2	210	62	2.25E-8	3.04E-10
390112B	8-6-02	Jmanc	40	40	2	270	40	1.27E-8	2.15E-10
390145B	7-22-02	Jmanc	48	48	2	210	48	2.47E-8	3.05E-10
390253A	7-29-02	Jmanc	48	48	2	290	48	2.47E-8	2.04E-10
390144	7/31/02	Jmanc	38	38	2	260	38	2.47E-8	2.23E-10

LQXB03 Leak Check Tickets

PART NO. 390147		SCALE UNITS BEFORE HELIUM PROBE	SCALE UNITS WHILE ENCLOSURE FLOODING	DETERMINATION OF MINIMUM DETECTABLE LEAK				
DATE TIME	OPERATOR'S LAST NAME			MDS	((Response - Bckgnd)	÷ Leak Value)	= MDL	
5-8-02	Jmanc	34	34	2	240	34	2.25E-8	2.18E-10

PART NO. 390140		SCALE UNITS BEFORE HELIUM PROBE	SCALE UNITS WHILE ENCLOSURE FLOODING	DETERMINATION OF MINIMUM DETECTABLE		
DATE TIME	OPERATOR'S LAST NAME			MDS	((Response - Bckgnd)	
6-4-02	Jmanc	20	20	2	220	20

PART NO. MD 390253 Bellows only		SCALE UNITS BEFORE HELIUM PROBE	SCALE UNITS WHILE ENCLOSURE FLOODING	DETERMINATION OF MINIMUM DETECTABLE LEAK				
DATE TIME	OPERATOR'S LAST NAME			MDS	((Response - Bckgnd)	- Leak Value)	= MDL	
8/7/03	Lamo	35	35	2	360	35	10-8 4.46	E-10 2.74

PART NO. 390165		SCALE UNITS BEFORE HELIUM PROBE	SCALE UNITS WHILE ENCLOSURE FLOODING	DETERMINATION OF MINIMUM DETECTABLE LEAK				
DATE TIME	OPERATOR'S LAST NAME			MDS	((Response - Bckgnd)	÷ Leak Value)	= MDL	
3-20-02	Jmanc	60	60	2	270	60	2.75E-8	2.14E-10

PART NO. 390165		SCALE UNITS BEFORE HELIUM PROBE	SCALE UNITS WHILE ENCLOSURE FLOODING	DETERMINATION OF MINIMUM DETECTABLE LEAK				
DATE TIME	OPERATOR'S LAST NAME			MDS	((Response - Bckgnd)	÷ Leak Value)	= MDL	
3-20-02	Jmanc	33	33	2	250	33	2.25E-8	2.07E-10

Revision Request Control Number: 1570

Specification Number: 5520 - TR - 333644 Current Revision: B

Traveler or Document Title Q2 LQXB Cryostat Final Assembly Traveler

Step #/Description of Revision:

3.2 Added Step. "Inspect the transition area between the support sections and tube sections. Grind smooth if necessary."
3.3 Added Step. "Clean the Vacuum Vessel using a vacuum cleaner or equivalent."
3.8 Modified Step. Added "Tap out holes with M10 – 1.5 Tap. Move Vessel to Table."
4.9 Added Step. "Measure the distance between the Suspension Rings at the bottom of the Threaded Rods. Install Threaded Rods after measurements."
4.10 Modified Step. Moved "Configure the Suspension Tooling for Q2 Assembly per (ME-364604). Place Suspension Assembly on the tooling and make necessary adjusts to the tooling." to New step 4.11.
4.16 Modified Step. Added "Install shims between the Brass Slide Bars and the Stainless Steel Blocks on each support as needed. Record Shim size and location below." New Step 4.17.
5.0 Modified, rearranged and added steps from step 5.13 to 5.35, per Notes taken by Steve Gould and Tom Page on LQXB02.
5.8 Added Step. "Install Q2 Installation Tie Rod Assembly (MC-390635) and Tie Bar Retaining Clamp (MB-390136) as per Q2 Cryostat Assembly - Internal Piping (ME-390208)." per traveler LQXB03-0.
5.18 Modified Step. Changed Quantity from 2 ea to 4 ea. "...Pumping Line Pipe Stop (MB-390149), (4 ea.) and Cool Down Line Pipe Stop (MB-390150) (4 ea.)."
5.19 Modified Step. Changed Quantity from 2 ea to 4 ea. "...Pumping Line Pipe Stop (MB-390149), (4 ea.) and Cool Down Line Pipe Stop (MB-390150) (4 ea.)."
5.20 Modified Step. Changed Technician Signoff to Weldor Signoff.
5.21 Modified Step. Changed to "Clean the following parts fromQ2 Heat Exchanger Corrugated Tube Assembly (ME-390143)." Added Table. New step 5.35.
5.22 Modified Step. Moved to after Suspension System Adjusting Screws are installed. New Step 7.7
5.23 Modified Step. Moved to after Suspension System Adjusting Screws are installed. New Step 7.8
6.1 Moved Step. Moved to New Step 6.2. "Install the Cold mass MLI Blankets per (ME-390302) and in the same position as Step 5.6." Cannot Lift Cold Mass with Blankets installed.
6.2 Moved Step. Moved to New Step 6.1. "Lift the Cold Mass Assembly and place the Center Section (ME-390164) and End Sections (ME-390162) on the Insertion Rails. Lower the Cold mass back onto the rails ensuring the holes in the Shield Sections line up with Support Rollers."

John Szostak	Jim Rife	8/13/2003
Originator	Responsible Authority	Date

Revision Incorporated into the Traveler:

John Szostak	11/18/2003
Revision Incorporated By	Date

Process Engineering Final Review:

Bob Jensen	11/18/2003
Process Engineering/Designee	Date

Instructions for the completion of the Revision Request Form

Note(s):

Multiple steps may be effected by one Revision Request Form but only one specific Traveler or Document may be effected by each Revision Request Form.

If completing this form by hand, a Revision Request Control Number must be obtained before processing.

If completing this form entirely by electronic means, the printed copy to be filed in the Process Engineering Office is to be initialed by the individual incorporating the Revision Request and the individual who reviewed the Traveler or Document.

Originator Instructions:

1) Specification Number: - Enter the Specification Number of the Traveler or Document to be revised. (Document title is inserted automatically from the spec. #)

2) Current Revision: - Enter the Revision of the Traveler or Document to be revised.

3) Step# / Description of the Revision: - Enter a description of the revision to be made and the step# it applies to, if applicable. If needed to describe the revision attach a copy of the page(s). If the revision is coming from a related document such as a Discrepancy Report or an Engineering Order attach a copy of that document to the Revision Request Form.

4) Originator: - Originator is the person generating the form. (Select Name from List)

5) Responsible Authority: - Responsible Authority is person responsible for the process in question. (Select Name from List)

Process Engineering Office Instructions:

1) Revision Incorporated into the Traveler: - Signature of the individual who incorporated the revision.

2) Process Engineering Final Review: - Review the Traveler or Document revised, sign and date the form. The original completed Revision Request Form will be retained by the Process Engineering Office in the Revision Request Binder.

Revision Request Control Number: 1586

Specification Number: 5520 - TR - 333644 Current Revision: C

Traveler or Document Title Q2 LQXB Cryostat Final Assembly Traveler

Step #/Description of Revision:

Cover Page Modified. Added signoff for Rodger Bossert for Final Electrical Steps in traveler.
3.1 Added Step. "Record the Vacuum Vessel Serial Number." per Jim Rife.
4.9 Modified Step. Moved to after Leak Checks. (New Step 5.34)
4.11 Modified Step. Changed ½" to 2" per Steve Gould.
5.8 Added Step. "Install Q2 Installation Tie Rod Assembly (MC-390635) and Tie Bar Retaining Clamp (MB-390136) as per Q2 Cryostat Assembly - Internal Piping (ME-390208)."
5.15 Modified Step. Changed to Technician Signoff.
5.21 Removed Step. "Re-install the Threaded Rods and lock into place." per TR-333644, LQXB04.
5.22 Removed Step. "Perform a Stretched Wire Measurement." per TR-333644, LQXB04.
5.23 Removed Step. "Insert the Q2 Pumping Line Tube (MB-390147) and Q2 Cool Down Line Tube (MB-390146)." Completed in step 5.10.
5.24 Removed Step. "Weld Pumping Line End Flange (MA-390032) to the Q2 Pumping Line Tube (MB-390147)." Completed in step 5.12.
5.25 Removed Step. "Weld Cool Down Line End Flange (MA-390033) to the Q2 Cool Down Line Tube (MB-390146)." Completed in step 5.12.
6.9 Modified Step. Added "Tap the PEM nuts prior to installing shield. Use care in tightening screws so they don't break." per DR No. HGQ-0441.
7.6 Modified Step. Added Note. "Note(s): Ensure proper lubrication on adjusting screws. Check threads on screw and vacuum vessel prior to assembly and fix if necessary."
8.0 Added Step. Added Final Electrical Inspection per Jim Rife.

John Szostak	Jim Rife	12/1/2003
Originator	Responsible Authority	Date
Revision Incorporated into the Traveler:	John Szostak	2/2/2004
	Revision Incorporated By	Date
Process Engineering Final Review:	Bob Jensen	2/2/2004
	Process Engineering/Designee	Date

Instructions for the completion of the Revision Request Form

Note(s):

Multiple steps may be effected by one Revision Request Form but only one specific Traveler or Document may be effected by each Revision Request Form.

If completing this form by hand, a Revision Request Control Number must be obtained before processing.

If completing this form entirely by electronic means, the printed copy to be filed in the Process Engineering Office is to be initialed by the individual incorporating the Revision Request and the individual who reviewed the Traveler or Document.

Originator Instructions:

1) Specification Number: - Enter the Specification Number of the Traveler or Document to be revised. (Document title is inserted automatically from the spec. #)

2) Current Revision: - Enter the Revision of the Traveler or Document to be revised.

3) Step# / Description of the Revision: - Enter a description of the revision to be made and the step# it applies to, if applicable. If needed to describe the revision attach a copy of the page(s). If the revision is coming from a related document such as a Discrepancy Report or an Engineering Order attach a copy of that document to the Revision Request Form.

4) Originator: - Originator is the person generating the form. (Select Name from List)

5) Responsible Authority: - Responsible Authority is person responsible for the process in question. (Select Name from List)

Process Engineering Office Instructions:

1) Revision Incorporated into the Traveler: - Signature of the individual who incorporated the revision.

2) Process Engineering Final Review: - Review the Traveler or Document revised, sign and date the form. The original completed Revision Request Form will be retained by the Process Engineering Office in the Revision Request Binder.

Revision Request Control Number: 1513

Specification Number: 5520 - TR - 333643 Current Revision: None

Traveler or Document Title Q2 LMQXB Cold Mass Module Assembly Traveler

Step #/Description of Revision:

6.5 Modified Step. Changed MiniLevel Tolerance to +/- 0.05 mm/m per Tom Page.
6.10 Modified Step. Changed MiniLevel Tolerance to +/- 0.05 mm/m per Tom Page.
7.18 Modified Step. Changed to "Cut Q2b Quadrant 4 Lead at end of splice per Drawing (ME-369895)."
7.22 Modified Step. Added Picture to show all three Bus Leads. (13kA, 5kA 8kA)
7.29.2 Modified Step. Changed End of step to read "...Figure 7.29.2-A below." Corrected Picture to reflect accurate wiring diagram. Per DR No. HGQ-0374.
7.36 Modified Step. Changed MiniLevel Tolerance to +/- 0.05 mm/m per Tom Page.
8.1 Modified Step. Added Voltage Tap Serial Numbers to Tables.
11.11 Added Step. "Tack weld the corrector mounting hardware in place as per Q2 Coldmass welded assembly (ME-390309)."
11.13 Added Step. "Mount and adjust the Shipping restraint screws."
13.1 Modified Step. Added Voltage Tap Serial Numbers to Tables.
14.1 Modified Step. Added new wire information for installation of Hypertronics per Mike Lamm.
14.2 Modified Step. Added new wire information for installation of Hypertronics per Mike Lamm.

John Szostak	Jim Rife	3/31/2003
Originator	Responsible Authority	Date
Revision Incorporated into the Traveler:	John Szostak	7/17/2003
	Revision Incorporated By	Date
Process Engineering Final Review:	Bob Jensen	7/17/2003
	Process Engineering/Designee	Date

Instructions for the completion of the Revision Request Form

Note(s):

Multiple steps may be effected by one Revision Request Form but only one specific Traveler or Document may be effected by each Revision Request Form.

If completing this form by hand, a Revision Request Control Number must be obtained before processing.

If completing this form entirely by electronic means, the printed copy to be filed in the Process Engineering Office is to be initialed by the individual incorporating the Revision Request and the individual who reviewed the Traveler or Document.

Originator Instructions:

1) Specification Number: - Enter the Specification Number of the Traveler or Document to be revised. (Document title is inserted automatically from the spec. #)

2) Current Revision: - Enter the Revision of the Traveler or Document to be revised.

3) Step# / Description of the Revision: - Enter a description of the revision to be made and the step# it applies to, if applicable. If needed to describe the revision attach a copy of the page(s). If the revision is coming from a related document such as a Discrepancy Report or an Engineering Order attach a copy of that document to the Revision Request Form.

4) Originator: - Originator is the person generating the form. (Select Name from List)

5) Responsible Authority: - Responsible Authority is person responsible for the process in question. (Select Name from List)

Process Engineering Office Instructions:

1) Revision Incorporated into the Traveler: - Signature of the individual who incorporated the revision.

2) Process Engineering Final Review: - Review the Traveler or Document revised, sign and date the form. The original completed Revision Request Form will be retained by the Process Engineering Office in the Revision Request Binder.

Traveler Title:	Specification No:	Revision:	DR No:
Q2 LQXB Cryostat Final Assembly Traveler	5520-TR-333644	B	HGQ-0432

Step No:	Drawing No:	Routing Form No:	Serial No:	Rework ID:
7.9	390206		LQXB03	0

Discrepancy Description:

Voltage tap VTV1 was found to be unattached on the Q2-Q3 connector at the Q2B end of the vessel.

Originator: Steve Gould

Date: 10/13/2003

Cause of Nonconformance:

Unknown at this time.

Responsible Authority: Jim Kerby

Date: 6/7/2004

Disposition:

Voltage tap wire is redundant. Test magnet as is and repair after testing.

Responsible Authority: Jim Kerby

Date: 6/7/2004

Corrective Action to Prevent Recurrence:

Review and develop hypertronics assembly techniques with technicians and instill the developed methods. (TR-333643 - TRR No. 1513)

Responsible Authority: Jim Kerby

Date: 6/7/2004

Corrective Action/Disposition Verified By: John Szostak

Date: 6/10/2004

Will Configuration be affected?: ☐ YES ☑ NO

Identified problem area:

☐ Material ☐ Manpower ☑ Method ☐ Machine ☐ Measurement

Reviewed By: Bob Jensen

Date: 12/6/2004

TD/ENGINEERING & FABRICATION

PARTS KIT REQUEST

IMPORTANT NOTES:
1) MAGNET NUMBER MUST BE FILLED IN.
2) ONLY ONE FORM PER MAGNET.
3) PARTS COORDINATOR OR DESIGNEE MUST SIGN THIS FORM.
4) MATERIAL CONTROL WILL ISSUE PARTS AND RECORD ROUTING NUMBER.
5) ANY QUANTITIES NOT AVAILABLE WILL HAVE COMMENTS RETURNED TO THE PARTS COORDINATOR FOR REVIEW.

MAGNET NUMBER: LQXB03

RELEASED BY

PRODUCTION SIGNATURE: J. Szostak x2003

TODAYS DATE: 9-Jun-03

NEED DATE: 20-Jun-03

DELIVER TO_____ICB

BUDGET CODE: LCI

PROJECT NUMBER: 300
TASK NUMBER: 1.1.1.3.3

ISSUE VERIFICATION

MATERIAL CONTROL SIGNATURE: Marsha Schmidt

DATE ISSUED TO STOCKROOM: 6/9/03

THIS KIT LIST IS FOR

ME-390310		Q2 COLDMASS ASSEMBLY SUSPENSION

PART NUMBER	REV	DESCRIPTION	REQUIRED QTY/ASS'Y		MATERIAL CONTROL: QTY FILLED OUT BY STOCK ROOM: ISSUED	ROUTE FORM	NOT AVAIL	FILLED OUT BY EXPEDITER: DATE AVAIL	COMMENTS TO PRODUCTION MANAGER	PROD VERIFY PART	SUPT. VERIFY PART
390043	B	SUPPORT RING ASSEMBLY	3	EA	3	76906		6/9/03	NT02407 - 17		
390047	B	SUPPORT PINS	6	EA	6	76914			R2,S2,L4 - 118		
390118	*	TIE BAR SHIM, 6.4mm	6	EA	6	77204			IB4 Bin - 65		
390119	*	TIE BAR SHIM, 2.4mm	6	EA	6	77203			IB4 Bin - 64		
390120	*	TIE BAR SHIM, 0.6mm	6	EA	6	77202			IB4 Bin - 64		
390167	*	Q2 TIE BAR ASSEMBLY	4	EA	4	78085			PIN - 28		
390275	A	SUPPORT PIN SHIM - 1mm	24	EA	24	76911			IB4 Bin - 216		
390276	*	SUPPORT PIN SHIM - 0.5mm	24	EA	24	76910			IB4 Bin - 216		
390277	*	SUPPORT PIN BELT	24	EA	24	76913			IB4 Bin - 463		
390280	*	OUTBOARD SUSPENSION MOUNTING BRACKET	4	EA	4	77277			R9,S1,L2 - 28		
390281	*	MIDDLE SUSPENSION MTG BRACKET	2	EA	2	77106			IB4 Bin - 14		
390303	*	MLI END BLANKET	2	EA	2	N/A			PIN - 16		
390304	*	MLI MID BLANKET	2	EA	2	N/A			PIN - 16		
390321	A	TWO PIECE CLAMP ON COLLAR	4	EA	4	76912			IB4 Bin - 100		
390480	*	SUPPORT PIN SHIM - 0.13mm	24	EA	24	79121			R2,S2,L4 - 456		
390481	*	SUPPORT PIN SHIM - 0.25mm	36	EA	36	79122			R2,S2,L4 - 693		
393020	*	M8 x 50mm SHCS, S.S.	18	EA	18	77847			IB4 Bin - 164		
* 393023	*	M8 HEX NUT, S.S.	18	EA	18	78090			IB4 Bin - 386		
393025	*	M8 FLAT WASHER, S.S.	18	EA	18	76745			IB4 Bin - 1148		
393027	*	M8 LOCK WASHER, S.S.	18	EA	18	78199		✓	IB4 Bin - 1131		

RETURN THIS COMPLETED PARTS KIT REQUEST WITH THE ISSUED PARTS TO THE PARTS COORDINATOR.

7/11/03 : STOCKROOM SIGNATURE AND DATE

TRAVELER NO. TR-333644

KIT IS COMPLETE (PARTS COORDINATOR SIGNATURE): John J. Szostak BADGE # 02943C DATE 7/14/03