LQXB

Q2 LQXB Cryostat Final Assembly Traveler

333644 /Rev. C

LQXB04-0

LQXB

Job No.:
248

Project/Task No.
300/1.1.1.6.2

Series:
LQXB

Serial No:
LQXB04

Rework ID:
0

Specification No.:
333644

Revision:
C

Place Face Down For Scanning!!!

LQXB04-0

Fermi National Accelerator Laboratory
Batavia, IL 60510

LARGE HADRON COLLIDER
Q2-LQXB
CRYOSTAT FINAL ASSEMBLY TRAVELER

Reference Drawing(s):
Vacuum Vessel and Cryostat Assembly
(ME-390206)

Project/Task Number: *300/1.1.1.6.2*

Released By: *John Szostak* | **Magnet/Device Series:** *LQXB*

Date Issued: *12/5/2003 8:56:21 AM* | **Scanned Pages:** 49

Prepared by: J. Szostak

Title	Signature	Date
TD / E&F Process Engineering	*Bob Jensen* Bob Jensen / Designee	*11/18/03*
TD / LHC Production Supervisor	*Jim Rife* Jim Rife / Designee	*11/19/03*
TD / LHC Production Engineer Cryostat	*Tom Page* Tom Page / Designee	*11/19/03*
TD / LHC Project Engineer Cryostat	*Tom Nicol* Tom Nicol / Designee	*11/19/03*
TD / LHC Program Manager	*Jim Kerby* Jim Kerby / Designee	*11/20/03*

Revision Page (1 of 2)

Revision	Step No.	Revision Description	TRR No.	Date
None	N/A	Initial Release	N/A	6/17/02
A	3.1	Removed Step. Not necessary.	1485	10/2/02
	3.2	Modified Step. Changed to "Add Insertion Rails per Vacuum Vessel Assembly (ME-390129)."		
	4.1	Modified Step. Added "Suspension System Adjusting Screw, M16 x 70mm SHCS and Washer" to the Parts table.		
	4.3	Modified step. "Install the Suspension System Adjusting Screws (MB-390039), M16 Screw and washer into the Vacuum Vessel to hold the Fixed Support Assembly in place. Coat all screw heads with Molybdenum disulfide prior to installation."		
	4.6	Modified step. "Install the Suspension System Adjusting Screws (MB-390039), M16 Screw and washer into the Vacuum Vessel to hold the Sliding Support Assemblies in place. Coat all screw heads with Molybdenum disulfide prior to installation."		
	4.11	Modified Step. "Slide the Suspension System over the Cold Mass and place on tooling. The Suspension system may be disassembled during this step. Record shim sizes and locations prior to disassembly." New Step 4.13.		
	5.1	Added Step. "Place the Cold mass assembly on the insertion rail system."		
	5.3	Added Step. "Install Cold mass Insulation per Cold mass Insulation Installation (ME-390302)."		
	5.5	Added Step. "Using Pipe Supports as a template, cut the blankets around the Pipe Support Feet and slit blankets circumferentially at the Pipe Supports."		
	5.6	Added Step. "Remove Pipe Supports and blankets. Wrap blankets in plastic bag to keep clean for later use. Label blankets as they are removed for later positioning."		
	5.7	Added Step. "Install Pipe Supports to same location as in step 5.4."		
	5.16	Added Step. "Weld the Pipe Support Gussets to the Cold mass per Q2 Piping Assembly (ME-390208)."		
	6.0	Modified Steps per Tom Page.		
	7.1	Modified Steps per Tom Page.		
	7.2	Modified Steps per Tom Page.		
	7.3	Modified Steps per Tom Page.		
	7.4	Modified Steps per Tom Page.		
	7.5	Modified Steps per Tom Page.		
B	4.1	Modified Step. Changed to "Label the IP End and the Non-IP End of the Vacuum Vessel with a temporary sticker or equivalent." per Jim Rife.	1539	7/17/03
	5.0	Added Note "**Note(s): Do not use a strap wrench on the pipes.**" per **DR No. HGQ-0394.**		

Revision Page (2 of 2)

Revision	Step No.	Revision Description	TRR No.	Date
C	3.2	Added Step. "Inspect the transition area between the support sections and tube sections. Grind smooth if necessary."	1570	11/18/03
	3.3	Added Step. "Clean the Vacuum Vessel using a vacuum cleaner or equivalent."		
	3.8	Modified Step. Added "Tap out holes with M10 – 1.5 Tap. Move Vessel to Table."		
	4.9	Added Step. "Measure the distance between the Suspension Rings at the bottom of the Threaded Rods. Install Threaded Rods after measurements."		
	4.10	Modified Step. Moved "Configure the Suspension Tooling for Q2 Assembly per (ME-364604). Place Suspension Assembly on the tooling and make necessary adjusts to the tooling." to New step 4.11.		
	4.16	Modified Step. Added "Install shims between the Brass Slide Bars and the Stainless Steel Blocks on each support as needed. Record Shim size and location below." New Step 4.17.		
	5.0	Modified, rearranged and added steps from step 5.13 to 5.35, per Notes taken by Steve Gould and Tom Page on LQXB02.		
	5.8	Added Step. "Install Q2 Installation Tie Rod Assembly (MC-390635) and Tie Bar Retaining Clamp (MB-390136) as per Q2 Cryostat Assembly - Internal Piping (ME-390208)." per traveler LQXB03-0.		
	5.18	Modified Step. Changed Quantity from 2 ea to 4 ea. "...Pumping Line Pipe Stop (MB-390149), (4 ea.) and Cool Down Line Pipe Stop (MB-390150) (4 ea.)."		
	5.19	Modified Step. Changed Quantity from 2 ea to 4 ea. "...Pumping Line Pipe Stop (MB-390149), (4 ea.) and Cool Down Line Pipe Stop (MB-390150) (4 ea.)."		
	5.20	Modified Step. Changed Technician Signoff to Weldor Signoff.		
	5.21	Modified Step. Changed to "Clean the following parts fromQ2 Heat Exchanger Corrugated Tube Assembly (ME-390143)." Added Table. New step 5.35.		
	5.22	Modified Step. Moved to after Suspension System Adjusting Screws are installed. New Step 7.7		
	5.23	Modified Step. Moved to after Suspension System Adjusting Screws are installed. New Step 7.8		
	6.1	Moved Step. Moved to New Step 6.2. "Install the Cold mass MLI Blankets per (ME-390302) and in the same position as Step 5.6." Cannot Lift Cold Mass with Blankets installed.		
	6.2	Moved Step. Moved to New Step 6.1. "Lift the Cold Mass Assembly and place the Center Section (ME-390164) and End Sections (ME-390162) on the Insertion Rails. Lower the Cold mass back onto the rails ensuring the holes in the Shield Sections line up with Support Rollers."		
	7.8	Removed Step. " Install the Conflat flanges with copper gaskets on the Vacuum Vessel as per the General Assembly (ME-390000)." Conflat Flanges installed in IB#1.		

Ensure appropriate memos and specific instructions are placed with the traveler before issuing the sub traveler binder to production.

1.0 General Notes

1.1 All steps that require a sign-off shall include the Technician/Inspectors first initial and full last name.

1.2 No erasures or white out will be permitted to any documentation. All incorrectly entered data shall be corrected by placing a single line through the error, initial and date the error before adding the correct data.

1.3 All Discrepancy Reports issued shall be recorded in the left margin next to the applicable step.

1.4 All personnel performing steps in this traveler must have documented training for this traveler and associated operating procedures.

1.5 Personnel shall perform all tasks in accordance with current applicable ES&H guidelines and those specified within the step.

1.6 Cover the product/assembly with Green Herculite (Fermi stock 1740-0100) when not being serviced or assembled.

2.0 Parts Kit List

2.1 Attach the completed Parts Kit for this production operation to this traveler. Ensure that the serial number on the Parts Kit matches the serial number of this traveler. Verify that the Parts Kit received is complete.

J. Szostak
Process Engineering/Designee

12/16/03
Date

3.0 Vacuum Vessel Preparation and Painting

TRR# 1586

3.1 Add Insertion Rails per Vacuum Vessel Assembly (ME-390129).

Technician(s) _____ Date 12/19/03

3.2 Inspect the transition area between the support sections and tube sections. Grind smooth if necessary.

Technician(s) _____ Date 11-22-03

3.3 Clean the Vacuum Vessel using a vacuum cleaner or equivalent.

Technician(s) _____ Date 11-22-03

3.4 Leak Check the Vacuum Vessel Assembly (ME-390003) per ES-107240 and record results in table below.

Part No.	DETERMINATION OF DETECTABLE LEAK						
_____	M.D.S. ÷ ((Response – Background) ÷ Leak value) = MDL						
OPERATOR'S LAST NAME	SCALE UNITS BEFORE HELIUM PROBE	SCALE UNITS WHILE ENCLOSURE FLOODING	MDS	Response	Background	Leak Value	MDL
						____ x E $^{-8}$	____ x E $^{-}$ ___

Leak check for Cryostat was in LQXB02

Inspector _____ Date _____

3.5 Prepare the outside of the Vacuum Vessel (ME-390003) for painting by cleaning with Ethyl Alcohol (Fermi stock 1920-0550) and Kimwipes (Fermi stock 1660-2500) or equivalent.

Technician(s) O. Friangs Date 11-22-03

3.6 Mask the Stainless Steel Components of the Vacuum Vessel for painting.

Technician(s) O. Friangs Date 11-22-03

3.7 Prime the Vacuum Vessel using Rust-o-leum (Fermi stock 1825-4000).

Technician(s) O. Friangs Date 11-22-03

3.8 Verify that the Screws (MA-393036) will thread easily into the appropriate holes in the Vacuum Vessel (ME-390126). If necessary, tap out holes with M10 – 1.5 Tap. Move Vessel to Table.

Lead Person _____ Date 11-22-03

3.9 Paint the Vacuum Vessel using Flambeau Red (Fermi stock 1825-3710).

Vacuum Vessel
(ME-390126)

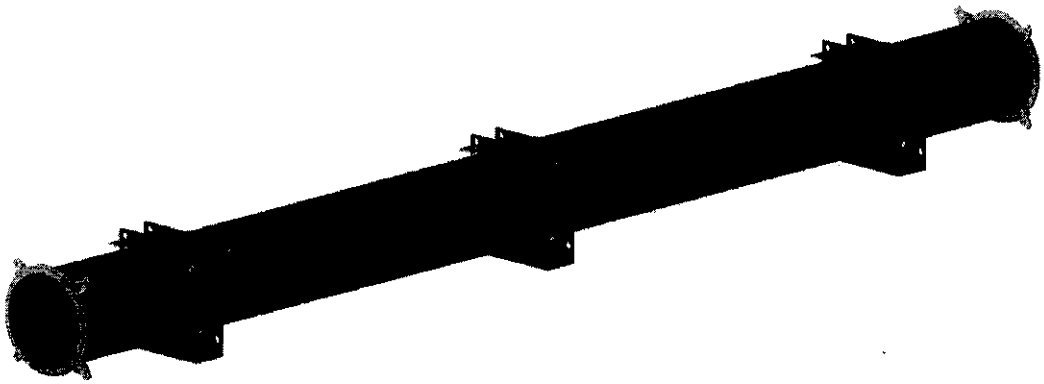

Technician(s) _____ Date 11-22-03

4.0 Suspension System

4.1 Clean the Suspension System with Ethyl Alcohol (Fermi stock 1920-0550) and Kimwipes (Fermi stock 1660-2500) or equivalent.

Part Name	Part Number	Quantity	Completed
Fixed Support Assembly	**(ME-390041)**	**1**	✓
Sliding Support Assembly	**(ME-390042)**	**2**	✓
Tie Bar Assembly	**(ME-390167)**	**4**	✓
Tie Bar Shim, .250"	**(ME-390118)**	**6**	✓
Tie Bar Shim, .093"	**(ME-390119)**	**6**	✓
Tie Bar Shim, .031"	**(ME-390120)**	**6**	✓
Suspension System Adjusting Screw	**(MB-390039)**	**12**	✓
M16 x 70mm SHCS	**(MA-393021)**	**12**	✓
Washer	**(MA-390377)**	**12**	✓

Label the IP End and the Non-IP End of the Vacuum Vessel with a temporary sticker or equivalent.

E. Strupp
Technician(s)

11-22-03
Date

4.2 Insert the Fixed Support Assembly (ME-390041) into the vacuum vessel and position at the center support.

Technician(s) 11-22-03 Date

4.3 Install the Suspension System Adjusting Screws (MB-390039), M16 Screw and washer into the Vacuum Vessel to hold the Fixed Support Assembly in place. Coat all screw threads with Molybdenum disulfide prior to installation.

[redacted]

Technician(s) 11-22-03 Date

4.4 Adjust the Vertical and rotational alignment of the Supports using the Suspension System Adjusting Screws (MB-390039). Ensure all four screws are in contact with the Support and that Diametrically Opposing Support Lugs are equidistant from the Vacuum Vessel Wall.

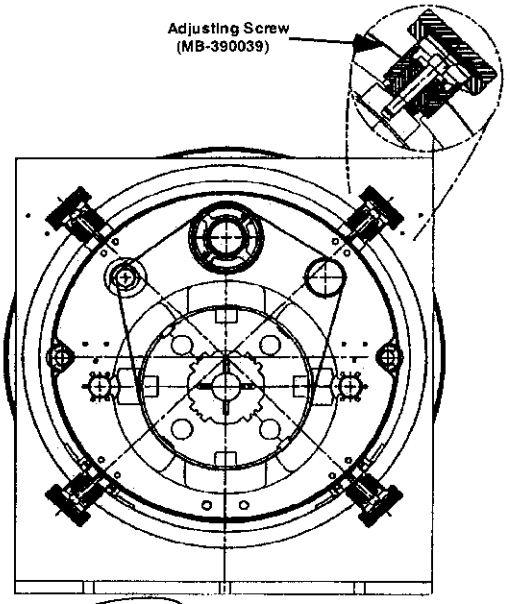

Technician(s) 11.22.03 Date

4.5 Insert the Sliding Support Assemblies (ME-390042) in to the Vacuum Vessel and position at each of the outboard support sections.

Technician(s) _____ Date 11.22.03

4.6 Install the Suspension System Adjusting Screws (MB-390039), M16 Screw and washer into the Vacuum Vessel to hold the Fixed Support Assembly in place. Coat all screw threads with Molybdenum disulfide prior to installation.

[redacted]

Technician(s) _____ Date 11-22-03

4.7 Adjust the Vertical and rotational alignment of the Supports using the Suspension System Adjusting Screws (MB-390039). Ensure all four screws are in contact with the Support and that Diametrically Opposing Support Lugs are equidistant from the Vacuum Vessel Wall.

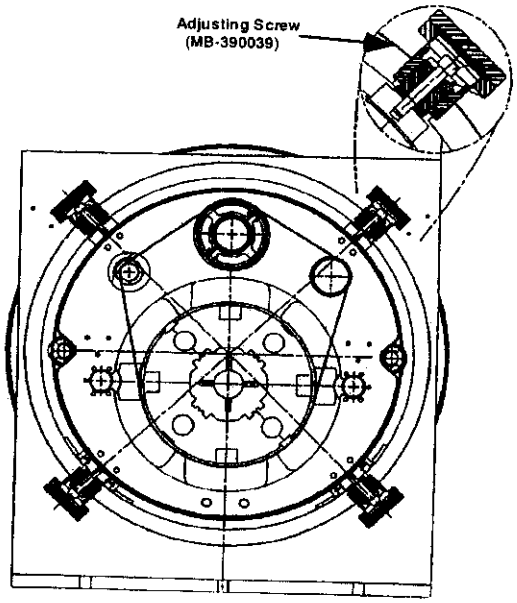

Technician(s) _____ Date 11.22.03

TRR#1586
MOVE STEP 4.9 TO 5.21 DELETE STEP 5.21. ALSO, EXCLUDE MEASURING ROD, AS IT IS PRE CUT TO LENGTH

4.8 Assemble the Suspension System using the Fixed Support Assembly (ME-390041), the Sliding Support Assemblies (ME-390042) and the Tie Bar Assemblies (MC-390167). Insert Tie Bar Shims (MC-390118),(MB-390119) and (MB-390120) between the Sliding Support Assemblies (ME-390042) and the Tie Bar Assemblies (MC-390167) as required. (Reference drawing: ME-390310)

Technician(s) _____ Date 12-12-03

4.9 Measure the distance between the Suspension Rings at the bottom of the Threaded Rods. Install Threaded Rods after measurements

Non-IP North _____ **IP North** _____

Non-IP South _____ TO **IP South** _____

Technician(s) _____ Date _____

4.10 Label the IP End Support and the Non-IP End Support. (Writing on the G-11 Support is acceptable).

Technician(s) _____ Date 12-12-03

CHANGE 1/2 TO 2

4.11 Loosen each Suspension System Adjusting Screw (MB-390039) ~~1/2~~ 2 turn and remove the Suspension System from the Vacuum Vessel.

Technician(s) _____ Date 12-12-03

4.12 Configure the Suspension Tooling for Q2 Assembly per (ME-364604). Place Suspension Assembly on the tooling and make necessary adjusts to the tooling.

Technician(s) _____ Date 12-12-03

4.13 Assemble the Outboard Suspension Mounting Brackets (MD-390280) to the Sliding Support Assemblies (outboard supports, ME-390042).

Technician(s) _____ Date 12-13-03

4.14 Assemble the Center Suspension Mounting Brackets (MD-390281) to the Sliding Fixed Assemblies (center support, ME-390041).

Technician(s) _____ Date 12-13-03

4.15 Slide the Suspension System over the Cold Mass and place on tooling. The Suspension system may be disassembled during this step. Record shim sizes and locations prior to disassembly.

Note(s):

Ensure that the Suspension System is configured properly to the Cold Mass with respect to the IP and Non-IP Ends.

Technician(s) _____ Date 12-15-03

X 4.16 Verify locking collars exist only at center support.

Lead Person _____ Date 12/15/03

4.17 Establish alignment between the Cold Mass and the Support system. Install shims between the Brass Slide Bars and the Stainless Steel Blocks on each support as needed.

Record Shim size and location below.

East-North .045 **East-South** .045

Center-North .075 **Center-South** .075

West-North .055 **West-South** .055

Technician(s) _____ Date 12/15/03

X 4.18 Verify the Alignment of the Cold Mass and the Support System.

Crew Chief _____ Date 12/16/03

4.19 Weld the Cold Mass to the Outboard Cold Mass Brackets as per (ME-390310).

Weldor(s) _____ Date 12/16/03

5.0 Piping Assembly

Note(s):
Do not use a Strap Wrench on the Pipes.

5.1 Place the Cold mass assembly on the insertion rail system.

Technician(s) _____ Date 12/17/03

5.2 Clean the Pipe Supports with Ethyl Alcohol (Fermi stock 1920-0550) and Kimwipes (Fermi stock 1660-2500) or equivalent.

Technician(s) O. Franzen / D. Kelly Date 12-17-03

5.3 Install Cold mass Insulation per Cold mass Insulation Installation (ME-390302).

Technician(s) _____ Date 12/17/03

5.4 Install the Pipe Supports (MD-390258)(Qty. 4) on the Cold Mass per (ME-390208).

Note(s):
A Tie Bar may be disconnected, if necessary, from the Fixed Support Assembly to install the central two pipe supports.

PIPE SUPPORT ASSEMBLY

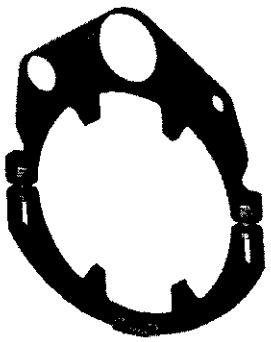

Technician(s) _____ Date 12/17/03

5.5 Using Pipe Supports as a template, cut the blankets around the Pipe Support Feet and slit blankets circumferentially at the Pipe Supports.

Technician(s) _____ Date 12/17/03

5.6 Remove Pipe Supports and blankets. Wrap blankets in plastic bag to keep clean for later use. Label blankets as they are removed for later positioning.

Technician(s) _____ Date 12/17/03

5.7 Install Pipe Supports to same location as in step 5.4.

Technician(s) _____ Date 12/17/03

5.8 Install Q2 Installation Tie Rod Assembly (MC-390635) and Tie Bar Retaining Clamp (MB-390136) as per Q2 Cryostat Assembly - Internal Piping (ME-390208).

Technician(s) _____ Date 12/17/03

5.9 Clean the Heat Exchanger Outer Shell Pipe (MD-390145), Pumping Line Pipe (MB-390147) and the Cool Down Pipe (MB-390146) with Ethyl Alcohol (Fermi stock 1920-0550) and Kimwipes (Fermi stock 1660-2500) or equivalent.

Technician(s) _____ Date 12/17/03

5.10 Slide the Heat Exchanger Outer Shell Pipe (MD-390145), Pumping Line Pipe (MB-390147) and the Cool Down Pipe (MB-390146) through all seven supports.

Note(s):

Ensure the cross over hole in the Heat Exchanger Pipe is lined up with the hole in the Cold Mass Center Tube.

Technician(s) _____ Date 12.18.03

5.11 Clean the Pumping Line Flanges (MB-390032), the Cool Down Line Flanges (MB-390033) and the Heat Exchanger Outer Shell Flanges (MB-390031) with Ethyl Alcohol (Fermi stock 1920-0550) and Kimwipes (Fermi stock 1660-2500) or equivalent.

Technician(s) _____ Date 12-17-03

5.12 Weld the Heat Exchanger Outer Shell Flanges (MB-390031), the Pumping Line Flanges (MB-390032) and the Cool Down Line Flanges (MB-390033) to the ends of the corresponding pipes. WRONG! ~~DONE~~ ~~LATER~~ SG

Weldor(s) _____ Date 12/18/03 / 12/19/03

5.13 Clean the Cold Mass and the Retainer Clips (MA-390103) with Ethyl Alcohol (Fermi stock 1920-0550) and Kimwipes (Fermi stock 1660-2500) or equivalent.

C. Friar — Technician(s) — Date 12/18/03

5.14 Weld the Retainer Clips (MA-390103) to the Cold Mass Outer Shell as per the Pipe Support Assembly (ME-390087) or (ME-390208).

Jeff Roberts — Weldor(s) — Date 12-18-03

5.15 Clean the Pipe Support Gussets with Ethyl Alcohol (Fermi stock 1920-0550) and Kimwipes (Fermi stock 1660-2500) or equivalent.

TRR# 1586

C. Friar — SG ~~Weldor(s)~~ TECHNICIAN — Date 12-17-03

5.16 Weld the Pipe Support Gussets to the Cold mass per Q2 Piping Assembly (ME-390208).

Jeff Roberts — Weldor(s) — Date 12-18-03

5.17 Clean the Heat Exchanger Connection (MC-390111) with Ethyl Alcohol (Fermi stock 1920-0550) and Kimwipes (Fermi stock 1660-2500) or equivalent.

C. Friar, K. Stone — Technician(s) — Date 12-18-03

5.18 Install the Heat Exchanger Connection (MC-390111). Verify alignment and then purge Cold Mass and Heat Exchanger Outer Shell Pipe with Argon Gas.

A. Gulel — Technician(s) — Date 12/18/03

5.19 Weld the Heat Exchanger Connection (MC-390111) to the Heat Exchanger Outer Shell and to the Cold Mass Center Tube per (ME-390208, Section F-F).

Jeff Roberts — Weldor(s) — Date 12-18-03

5.20 Insert 4.5k Intercept ~~Line~~ Pipes per (ME-390208).

E. Stone — Technician(s) — Date 12.18.03

SEE 4.9 → 5.21 ~~Re-~~Install the Threaded Rods and lock into place.

Technician(s) _____ Date 1/5/04

TRR# 1586 A 5.22 Perform a Stretched Wire Measurement.

Technician(s) _____ Date _____

5.23 Pressure test the Cold Mass Assembly at 375 psi Nitrogen per Section 5034 of the Fermilab ES&H Manual and UG-100 of the Code.

Warning:

The test is to be performed after normal working hours and only personnel directly involved with the test will be present.

Inspector _____ Date 12/19/03

5.24 Leak Check the Cold Mass Assembly. (This will include the Exchanger Outer Shell).

Part No.	DETERMINATION OF DETECTABLE LEAK						
	M.D.S. ÷ ((Response – Background) ÷ Leak value) = MDL						
OPERATOR'S LAST NAME	SCALE UNITS BEFORE HELIUM PROBE	SCALE UNITS WHILE ENCLOSURE FLOODING	MDS	Response	Background	Leak Value	MDL
S2AL	40x1	40x1	2	46x5	40x1	3.85 x E-8	4.05 x E-10

Inspector _____ Date 12-29-03

ALREADY DONE 5.25 ~~Insert the Pumping~~ Line Pipe (MD-390147) and Cooling Line Pipe (MD-390146).

Technician(s) _____ Date _____

5.26 Weld Pumping Line End Flange (MA-390032) to the ~~Pumping~~ Line Pipe (MD-390147).

Weldor(s) _____ Date _____

5.27 Weld Cool Down Line End Flange (MA-390033) to the Cooling Line Pipe (MD-390146).

Weldor(s) _____ Date _____

5.28 Clean the Pumping Line Pipe Stop (MB-390149), (4 ea.) and the Cool Down Line Pipe Stop (MB-390150) (4 ea.) with Ethyl Alcohol (Fermi stock 1920-0550) and Kimwipes (Fermi stock 1660-2500) or equivalent.

A Yoned — Technician(s) — 12/19/03 — Date

5.29 Weld the Pumping Line Pipe Stop (MB-390149), (4 ea.) and Cool Down Line Pipe Stop (MB-390150) (4 ea.) on the Pumping Line and Cool Down Lines.

Jeff Roberts — Welder — 12-19-03 — Date

5.30 Weld the fixed collar to the 4.5k Intercept Line per (ME-390208).

Jeff Roberts — Welder(s) — 12-19-03 — Date

5.31 Leak Check the Cool Down Line.

Part No.	DETERMINATION OF DETECTABLE LEAK						
	M.D.S. ÷ ((Response – Background) ÷ Leak value) = MDL						
OPERATOR'S LAST NAME	SCALE UNITS BEFORE HELIUM PROBE	SCALE UNITS WHILE ENCLOSURE FLOODING	MDS	Response	Background	Leak Value	MDL
SZAC	30x1	30x1	2	36x5	30x1	3.85 x E-8	5.10 x E-10

Inspector — 12-30-03 — Date

5.32 Leak Check the Pumping Line.

Part No.	DETERMINATION OF DETECTABLE LEAK						
	M.D.S. ÷ ((Response – Background) ÷ Leak value) = MDL						
OPERATOR'S LAST NAME	SCALE UNITS BEFORE HELIUM PROBE	SCALE UNITS WHILE ENCLOSURE FLOODING	MDS	Response	Background	Leak Value	MDL
SZAC	36x1	36x1	2	40x5	36x1	3.85 x E-8	4.70 x E-10

Inspector — 12-30-03 — Date

5.33 Leak check 4.5k Intercept Lines.

Part No. #1 #2 #3	DETERMINATION OF DETECTABLE LEAK						
	M.D.S. ÷ ((Response – Background) ÷ Leak value) = MDL						
OPERATOR'S LAST NAME	SCALE UNITS BEFORE HELIUM PROBE	SCALE UNITS WHILE ENCLOSURE FLOODING	MDS	Response	Background	Leak Value	MDL
S2AL	30 x 1	30 x 1	2	38 x 5	30 x 1	3.85 x E-8	4.81 x E-10

Inspector

12-30-03
Date

5.34 Install bottom of shield (390162 Qty 2) (390163 Qty 2) (390164).

Technician(s)

1/5/04
Date

5.35 Install Center Retainers (390086) before installing Support Bands (390083). Install Aluminum Spacers (390373) and screws to the End Sections before attaching the Support Bands.

Technician(s)

1/5/04
Date

5.36 Clean the following parts fromQ2 Heat Exchanger Corrugated Tube Assembly (ME-390143).

Part Name	Part Number	Quantity	Completed
Corrugated Tube Weldment	**(ME-390394)**	**1**	✓
Corrugated Tube Support	**(MB-390028)**	**8**	✓
Corrugated Tube Restrictor	**(ME-390029)**	**2**	✓

Technician(s)

1/5/04
Date

6.0 Shield Assembly

6.1 Lift the Cold Mass Assembly and place the Center Section (ME-390164) and End Sections (ME-390162) on the Insertion Rails. Lower the Cold mass back onto the rails ensuring the holes in the Shield Sections line up with Support Rollers.

Technician(s) _____ Date 1/5/06

LATER AFTER 6.6! SNG

6.2 Install the Cold mass MLI Blankets per (ME-390302) and in the same position as Step 5.6.

Technician(s) _____ Date 1/6/04

6.3 Insert the Mid Sections (ME-390163) and the Support Bands (MD-390083).

Technician(s) _____ Date 1/5/04

6.4 Assemble the bottom half of the shield. Leave all bolts loose. Spray all screw threads with Molybdenum.

Lower Shield Section
(ME-390082)

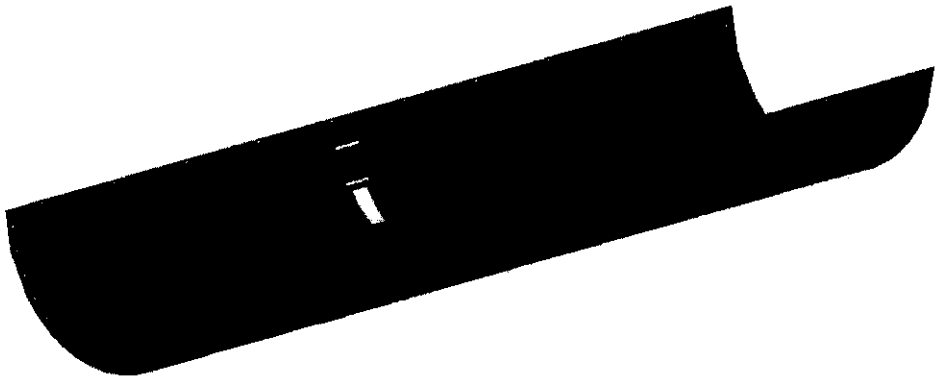

Technician(s) _____ Date 1/5/04

6.5 Assemble the Cooling Tubes (MD-390165) to the Bottom Half of the Shield.

Technician(s) _____ Date 1/5/04

6.6 Lift the Cold mass and place the Shield Inner and Outer MLI Blankets (ME-390313 & ME-390314) onto the insertion Rails in the correct orientation.

Note(s):

Place the Outer Blanket (ME-390314) on the Rails first.

Technician(s) _____ Date 1/6/04

6.7 Lower the Cold mass onto the rails. Ensure the slits in the blankets line up with Support Rollers.

Technician(s) _____ Date 1/6/04

6.8 Cut and install the pipe MLI blankets per Q2 Piping Insulation (ME-390306).

Technician(s) _____ Date 1/6/04

DX #
HGQ-9441

6.9 Install the Upper Shield per Q2 Thermal Shield Assembly (ME-390161). Spray all screw threads with Molybdenum.

Technician(s) _____ Date 1/7/04

6.10 Install the Shield Blankets (ME-390313 & ME-390314). Cutouts will have to be made for the Upper Support Lugs.

Technician(s) _____ Date 1-7-04

7.0 Cold Mass Insertion into the Vacuum Vessel

7.1 Install Green Putty between the Vacuum Vessel and the Insertion Rails.

Technician(s) _____ Date 1/7/04

7.2 Install the Cold Mass Pull-in Tooling.

Technician(s) _____ Date 1/7/04

7.3 Mount the Pneumatic Winch to floor on the West side of the Vacuum Vessel.

Technician(s) _____ Date 1/7/04

7.4 Connect the cable to the Pull-in Tooling.

Technician(s) _____ Date 1/7/04

7.5 Pull the Cold mass Assembly into the Vacuum Vessel.

Technician(s) _____ Date 1/7/04

7.6 When the Cold Mass is fully inserted, install the Suspension System Adjusting Screws (MB-390039).

Technician(s) _____ Date 1/8/04

7.7 Assemble Corrugated Tube Supports (MB-390028) and Restrictors (MB-390029) to the Heat Exchanger Corrugated Tube per (ME-390143).

Technician(s) _____ Date 1-12-04

7.8 Slide the Corrugated Tube Assembly (ME-390143) into the Heat Exchanger Outer Shell per (ME-390142).

Technician(s) _____ Date 1-12-04

DR # HGQ-0442

7.9 Adjust the Suspension System Adjusting Screw (MB-390039) as needed to center the Cold Mass in the Vacuum Vessel.

Technician(s) _____ Date 1/14/04

7.10 At the **Q2A** end, measure 1m 411.8 mm [55.58 in.] and cut the lead as per Q2 Module Assembly Q2a Lead End (ME-369895, sheet 3 of 4). Have a Weldor fuse the ends of the Superconducting Cable before shipping Magnet.

Technician(s) _____ Date 1/14/04

Weldor(s) _____ Date 1/14/04

7.11 At the **Q2B** end, measure 511.8 mm [20.15 in.] and cut the lead as per Q2 Module Assembly Q2b Lead End Details (ME-369895, sheet 2 of 4). Have a Weldor fuse the ends of the Superconducting Cable before shipping Magnet.

Technician(s) _____ Date 1/14/04

Weldor(s) _____ Date 1/14/04

8.0 Production Complete

8.1 Process Engineering verify that the LHC Cryostat Assembly Traveler (5520-TR-333644) is accurate and complete. This shall include a review of all steps to ensure that all operations have been completed and signed off. Ensure that all Discrepancy Reports, Nonconformance Reports, Repair/Rework Forms, Deviation Index and dispositions have been reviewed by the Responsible Authority for conformance before being approved.

Comments:

J. Ayostatz
Process Engineering/Designee

2/23/04
Date

TD/ENGINEERING & FABRICATION

PARTS KIT REQUEST

ORIGINAL

IMPORTANT NOTES:
1) MAGNET NUMBER MUST BE FILLED IN.
2) ONLY ONE FORM PER MAGNET.
3) PARTS COORDINATOR OR DESIGNEE MUST SIGN THIS FORM.
4) MATERIAL CONTROL WILL ISSUE PARTS AND RECORD ROUTING NUMBER.
5) ANY QUANTITIES NOT AVAILABLE WILL HAVE COMMENTS RETURNED TO THE PARTS COORDINATOR FOR REVIEW.

Used LQXB02 Vacuum Vessel (ser. no. Q2-2) for LQXB04 per Jim Rife. 11/19/03 J. Szostak

DELIVER TO_____ICB

BUDGET CODE: LCI

PROJECT NUMBER: 300
TASK NUMBER: 1.1.1.3.3

RELEASED BY

MAGNET NUMBER: LQXB04

PRODUCTION SIGNATURE: J. Szostak x2003

TODAYS DATE: 22-Oct-03

NEED DATE: 5-Nov-03

ISSUE VERIFICATION

MATERIAL CONTROL SIGNATURE: [signature]

DATE ISSUED TO STOCKROOM: 10/23/03

THIS KIT LIST IS FOR

ME-390206	A	Q2 CRYOSTAT ASSEMBLY (GENERAL)

PART NUMBER	REV	DESCRIPTION	REQUIRED QTY/ASS'Y		MATERIAL CONTROL: QTY FILLED OUT BY STOCK ROOM: ISSUED	ROUTE FORM	NOT AVAIL	FILLED OUT BY EXPEDITER: DATE AVAIL	COMMENTS TO PRODUCTION MANAGER	PROD VERIFY PART	SUPT. VERIFY PART
390039	B	ADJUSTING SCREW	12	EA	12	78885		10/23/03	219 JBY Bin		
~~390120~~	~~D~~	~~VACUUM VESSEL ASSEMBLY~~	~~1~~	~~EA~~					Used		
393031	*	SPRING PIN, 8 x 26	10	EA	10	77819		10/23/03	170 JBY Bin		
390408	A	END GUIDE RAIL	2	EA	2	78141			12 R16.5		
390406	A	CENTER GUIDE RAIL	4	EA	4	78139			25 R16.5		
390211	B	TARGET HOLDER	12	EA	12	78159			100 RID 1.1		
390374	*	BLANK, NON ROTATABLE CONFLAT FLANGE, 4.62" OD	12	EA	12	78987			217 R8.3.4		
390375	*	COPPER GASKET	12	EA	12	78429			322 JBY Bin		
390376	*	BOLT SET, HEX HEAD 5/16 - 24 x 1.25 LG.	120	EA	120	72306			2467		
390377	*	WASHER, 0.656" ID x 1.25" OD X 0.13 THK, S.S.	12	EA	12	[illegible]			[illegible]		
390426	*	TAYLOR HOBSON SOCKET CUP	12	EA	12	77873			224 R13.5		
393021	*	M10-1.5 x 30mm HEX SHSC 316	12	EA	12	[illegible]			363 JBY Bin		
393024	*	M6 FLAT WASHER 18-8 S.S.	48	EA	48	78891			388		
393036	*	M10-1.5 x 25mm HEX SHSC, S.S.	36	EA	36	[illegible]			672		
393045	*	M6-1.0 x 35mm HEX SHCS 18-8 S.S.	24	EA	24	78806			452		
393048	*	M8 x 30mm SPRING PIN 18-8 S.S.	12	EA	12	[illegible]			226		
390491	*	75MM DIA. FLANGE COVER	6	EA	6	78835			249		
390492	*	114MM DIA. FLANGE COVER	6	EA	6	[illegible]			246		
390493	*	134MM DIA. FLANGE COVER	8	EA	8	78837			342		
390494	*	201MM DIA. FLANGE COVER	2	EA	2	[illegible]			101		
390495	*	ALIGNMENT FIDUCIAL COVER	12	EA	12	78957			306		

RETURN THIS COMPLETED PARTS KIT REQUEST WITH THE ISSUED PARTS TO THE PARTS COORDINATOR.

[redacted] : STOCKROOM SIGNATURE AND DATE

TRAVELER NO. TR-333644

KIT IS COMPLETE (PARTS COORDINATOR SIGNATURE):_____ BADGE # 489 DATE [redacted]

ORIGINAL

TD/ENGINEERING & FABRICATION

PARTS KIT REQUEST

IMPORTANT NOTES:
1) MAGNET NUMBER MUST BE FILLED IN.
2) ONLY ONE FORM PER MAGNET.
3) PARTS COORDINATOR OR DESIGNEE MUST SIGN THIS FORM.
4) MATERIAL CONTROL WILL ISSUE PARTS AND RECORD ROUTING NUMBER.
5) ANY QUANTITIES NOT AVAILABLE WILL HAVE COMMENTS RETURNED TO THE PARTS COORDINATOR FOR REVIEW.

MAGNET NUMBER: [redacted]

RELEASED BY

PRODUCTION SIGNATURE: J. Szostak x2003

TODAYS DATE: 22-Oct-03

NEED DATE: [redacted]

DELIVER TO_____ICB

BUDGET CODE: LCI

PROJECT NUMBER: 300
TASK NUMBER: 1.1.1.3.3

ISSUE VERIFICATION

MATERIAL CONTROL SIGNATURE: Marsha Schmidt

DATE ISSUED TO STOCKROOM: 10/23/03

THIS KIT LIST IS FOR

ME-390161	A	Q2 THERMAL SHIELD ASSEMBLY

PART NUMBER	REV	DESCRIPTION	REQUIRED QTY/ASS'Y		MATERIAL CONTROL: QTY FILLED OUT BY STOCK ROOM: ISSUED	ROUTE FORM	NOT AVAIL	FILLED OUT BY EXPEDITER: DATE AVAIL	COMMENTS TO PRODUCTION MANAGER	PROD VERIFY PART	SUPT. VERIFY PART
[redacted]											
390083	A	SUPPORT BAND	8	EA	8	N/A		10/23/03	120 PIN		
[redacted]											
390103	*	RETAINING CLIP	16	EA	16	76795			312		
[redacted]											
390163	*	MID SECTION	4	EA	4	N/A			20		
[redacted]											
390165	*	COOLING TUBE WELDMENT	2	EA	2	N/A			10 PIN		
[redacted]											
390314	*	Q2 SHIELD MLI OUTER BLANKET	1	EA	1	N/A			6		
[redacted]											
390317	*	COOLING PIPE CLAMP	8	EA	8	77196			199		
[redacted]											
390378	*	RETAINING WASHER	360	EA	360	76875			6380		
[redacted]											
393019	*	M8 x 45mm SHCS, S.S.	8	EA	8	76748			76		
[redacted]											
393025	*	M8 FLAT WASHER, S.S.	16	EA	16	76745			1114		
[redacted]											
393028	*	M5 x 16mm BUTTON HEAD CAP SCREW	360	EA	360	76826			6325		
[redacted]											

RETURN THIS COMPLETED PARTS KIT REQUEST WITH THE ISSUED PARTS TO THE PARTS COORDINATOR.

[redacted] STOCKROOM SIGNATURE AND DATE

TRAVELER NO. TR-333644

KIT IS COMPLETE (PARTS COORDINATOR SIGNATURE):_____ BADGE # 4569 [redacted]

ORIGINAL

TD/ENGINEERING & FABRICATION

PARTS KIT REQUEST

IMPORTANT NOTES:
1) MAGNET NUMBER MUST BE FILLED IN.
2) ONLY ONE FORM PER MAGNET.
3) PARTS COORDINATOR OR DESIGNEE MUST SIGN THIS FORM.
4) MATERIAL CONTROL WILL ISSUE PARTS AND RECORD ROUTING NUMBER.
5) ANY QUANTITIES NOT AVAILABLE WILL HAVE COMMENTS RETURNED TO THE PARTS COORDINATOR FOR REVIEW.

MAGNET NUMBER: LQXB04

RELEASED BY

PRODUCTION SIGNATURE: J. Szostak x2003

TODAYS DATE: 22-Oct-03

NEED DATE: 5-Nov-03

DELIVER TO _____ ICB

BUDGET CODE: LCI

PROJECT NUMBER: 300
TASK NUMBER: 1.1.1.3.3

ISSUE VERIFICATION

MATERIAL CONTROL SIGNATURE: Marsha Schmidt

DATE ISSUED TO STOCKROOM: 10/23/03

THIS KIT LIST IS FOR

ME-390208	A	Q2 INTERNAL PIPING ASSEMBLY

PART NUMBER	REV	DESCRIPTION	REQUIRED QTY/ASS'Y		MATERIAL CONTROL: QTY FILLED OUT BY STOCK ROOM: ISSUED	ROUTE FORM	NOT AVAIL	FILLED OUT BY EXPEDITER: DATE AVAIL	COMMENTS TO PRODUCTION MANAGER	PROD VERIFY PART	SUPT. VERIFY PART
390028	•	CORRUGATED TUBE SUPPORT	8	EA	8	[redacted]		10/23/03	156 T9,2		
390029	A	CORRUGATED TUBE RESTRICTER	2	EA	2	77724			67 R9,51,44		
390031	B	HEAT EXCHANGER OUTER SHELL END FLANGE	2	EA	2	[redacted]			84 704 Bin		
390032	B	PUMPING LINE END FLANGE	2	EA	2	77210			81		
390033	B	COOL DOWN LINE END FLANGE	2	EA	2	[redacted]			65 ↓		
390111	A	HEAT EXCHANGER TO COLD MASS CONNECTOR	1	EA	1	76268			10 R2,51,65		
390136	•	[redacted]	[redacted]		[redacted]				17 704 Bin		
390145	B	Q2 OUTER SHELL TUBE	1	EA	1	N/A			7 P/N		
390146	A	Q2 COOL DOWN LINE TUBE	1	EA	1	[redacted]			6 ↓		
390147	A	Q2 PUMPING LINE TUBE	1	EA	1	77652			6 P/N		
390149	•	PUMPING LINE PIPE STOP	[redacted]		[redacted]	[redacted]			97 704 Bin		
390150	•	COOL DOWN LINE PIPE STOP	4	EA	4	77134			50		
390204	•	Q2 4.5K INTERCEPT LINE TUBE	1	EA	1	[redacted]			23 P/N		
390258	A	Q2 PIPE SUPPORT ASSEMBLY	4	EA	4	N/A			24 P/N		
390305	•	COLD MASS MLI CENTER BLANKET	1	EA	1	[redacted]			6 P/N		
390307	•	PIPING MLI END BLANKET	2	EA	2	N/A			12		
390308	•	PIPING MLI MID BLANKET	2	EA	2	[redacted]			15 ↓		
390379	A	INTERCEPT LINE PIPE STOP	6	EA	6	78894			198 704 Bin		
390394	•	Q2 CORRUGATED TUBE WELDMENT	[redacted]		[redacted]	[redacted]			6 P/N		
390452	A	PIPE SUPPORT BRACE	4	EA	4	74843			24 R1,53,62		
393017	•	M6 x 45mm HEX SHCS, S.S.	8	EA	8	[redacted]			76 704 Bin		
393022	A	M6 HEX NUT, S.S.	8	EA	8	78236			78 704 Bin		
393024	•	M6 FLAT WASHER, S.S.	8	EA	8	[redacted]			80		
393026	•	M6 LOCK WASHER, S.S.	8	EA	8	77850		↓	76 ↓		

RETURN THIS COMPLETED PARTS KIT REQUEST WITH THE ISSUED PARTS TO THE PARTS COORDINATOR.

[redacted] : STOCKROOM SIGNATURE AND DATE

TRAVELER NO. TR-333644

KIT IS COMPLETE (PARTS COORDINATOR SIGNATURE): _____ BADGE # 4569 [redacted]

ORIGINAL

TD/ENGINEERING & FABRICATION

PARTS KIT REQUEST

IMPORTANT NOTES:
1) MAGNET NUMBER MUST BE FILLED IN.
2) ONLY ONE FORM PER MAGNET.
3) PARTS COORDINATOR OR DESIGNEE MUST SIGN THIS FORM.
4) MATERIAL CONTROL WILL ISSUE PARTS AND RECORD ROUTING NUMBER.
5) ANY QUANTITIES NOT AVAILABLE WILL HAVE COMMENTS RETURNED TO THE PARTS COORDINATOR FOR REVIEW.

MAGNET NUMBER: LQXB04

RELEASED BY

PRODUCTION SIGNATURE: J. Szostak x2003

TODAYS DATE: 22-Oct-03

NEED DATE: 5-Nov-03

DELIVER TO_____ICB

BUDGET CODE: LCI

PROJECT NUMBER: 300
TASK NUMBER: 1.1.1.3.3

ISSUE VERIFICATION

MATERIAL CONTROL SIGNATURE: [signature]

DATE ISSUED TO STOCKROOM: 10/23/03

THIS KIT LIST IS FOR

ME-390310		Q2 COLDMASS ASSEMBLY SUSPENSION

PART NUMBER	REV	DESCRIPTION	REQUIRED QTY/ASS'Y		MATERIAL CONTROL: QTY FILLED OUT BY STOCK ROOM: ISSUED	ROUTE FORM	NOT AVAIL	FILLED OUT BY EXPEDITER: DATE AVAIL	COMMENTS TO PRODUCTION MANAGER	PROD VERIFY PART	SUPT. VERIFY PART
390043	B	SUPPORT RING ASSEMBLY	3	EA	3	N/A		10/23/03	14 NT 02407		
390047	B	SUPPORT PINS	6	EA	6	[illegible]			42 RB 53, L4		
390118	*	TIE BAR SHIM, 6.4mm	6	EA	6	77204			59 IB 4 Bin		
390119	*	TIE BAR SHIM, 2.4mm	6	EA	6	[illegible]			58 ↓		
390120	*	TIE BAR SHIM, 0.6mm	6	EA	6	77202			58 ↓		
390167	*	OUTER PIN BELT	[illegible]	EA	[illegible]	[illegible]			[illegible]		
390275	A	SUPPORT PIN SHIM - 1mm	24	EA	24	76911			192 IB 4 Bin		
390276	*	SUPPORT PIN BELT	[illegible]	EA	[illegible]	[illegible]			[illegible]		
390277	*	SUPPORT PIN BELT	24	EA	24	76913			432 ↓		
390280	*	OUTBOARD SUSPENSION MOUNTING BRACKET	[illegible]	EA	[illegible]	[illegible]			[illegible] RB 51, L4		
390281	*	MIDDLE SUSPENSION MTG BRACKET	2	EA	2	77106			12 IB 4 Bin		
390303	*	MLI END BLANKET	2	EA	2	[illegible]			[illegible] ↓		
390304	*	MLI MID BLANKET	2	EA	2	N/A			14 ↓		
390321	A	TWO PIECE FEAR ON COLTAN	[illegible]	EA	[illegible]	[illegible]			96 IB 4 Bin		
390480	*	SUPPORT PIN SHIM - 0.13mm	24	EA	24	79121			432 RB 52, L4		
390481	*	SUPPORT PIN SHIM - 0.25mm	[illegible]	EA	[illegible]	[illegible]			[illegible] RB 53, L4		
393020	*	M8 x 50mm SHCS, S.S.	18	EA	18	77947			146 IB 4 Bin		
393023	*	M8 HEX NUTS, S.S.	18	EA	[illegible]	[illegible]			[illegible] ↓		
393025	*	M8 FLAT WASHER, S.S.	18	EA	18	77198			1114 ↓		
393027	*	M8 LOCK WASHER, S.S.	18	EA	18	[illegible]			[illegible] ↓		

RETURN THIS COMPLETED PARTS KIT REQUEST WITH THE ISSUED PARTS TO THE PARTS COORDINATOR.

[redacted]: STOCKROOM SIGNATURE AND DATE

TRAVELER NO. TR-333644

KIT IS COMPLETE (PARTS COORDINATOR SIGNATURE):_____BADGE # 4589 [redacted]

Revision Request Control Number: 1586

Specification Number: 5520 - TR - 333644 Current Revision: C

Traveler or Document Title Q2 LQXB Cryostat Final Assembly Traveler

Step #/Description of Revision:

Cover Page Modified. Added signoff for Rodger Bossert for Final Electrical Steps in traveler.
3.1 Added Step. "Record the Vacuum Vessel Serial Number." per Jim Rife.
4.9 Modified Step. Moved to after Leak Checks. (New Step 5.34)
4.11 Modified Step. Changed ½" to 2" per Steve Gould.
5.8 Added Step. "Install Q2 Installation Tie Rod Assembly (MC-390635) and Tie Bar Retaining Clamp (MB-390136) as per Q2 Cryostat Assembly - Internal Piping (ME-390208)."
5.15 Modified Step. Changed to Technician Signoff.
5.21 Removed Step. "Re-install the Threaded Rods and lock into place." per TR-333644, LQXB04.
5.22 Remove Step. "Perform a Stretched Wire Measurement." per TR-333644, LQXB04.
5.23 Removed Step. "Insert the Q2 Pumping Line Tube (MB-390147) and Q2 Cool Down Line Tube (MB-390146)." Completed in step 5.10.
5.24 Removed Step. "Weld Pumping Line End Flange (MA-390032) to the Q2 Pumping Line Tube (MB-390147)." Completed in step 5.12.
5.25 Removed Step. "Weld Cool Down Line End Flange (MA-390033) to the Q2 Cool Down Line Tube (MB-390146)." Completed in step 5.12.
6.9 Modified Step. Added "Tap the PEM nuts prior to installing shield. Use care in tightening screws so they don't break." per DR No. HGQ-0441.
7.6 Modified Step. Added Note. "Note(s): Ensure proper lubrication on adjusting screws. Check threads on screw and vacuum vessel prior to assembly and fix if necessary."
8.0 Added Step. Added Final Electrical Inspection per Jim Rife.

John Szostak	Jim Rife	12/1/2003
Originator	Responsible Authority	Date
Revision Incorporated into the Traveler:	John Szostak	2/2/2004
	Revision Incorporated By	Date
Process Engineering Final Review:	Bob Jensen	2/2/2004
	Process Engineering/Designee	Date

Instructions for the completion of the Revision Request Form

Note(s):

Multiple steps may be effected by one Revision Request Form but only one specific Traveler or Document may be effected by each Revision Request Form.

If completing this form by hand, a Revision Request Control Number must be obtained before processing.

If completing this form entirely by electronic means, the printed copy to be filed in the Process Engineering Office is to be initialed by the individual incorporating the Revision Request and the individual who reviewed the Traveler or Document.

Originator Instructions:

1) Specification Number: - Enter the Specification Number of the Traveler or Document to be revised. (Document title is inserted automatically from the spec. #)

2) Current Revision: - Enter the Revision of the Traveler or Document to be revised.

3) Step# / Description of the Revision: - Enter a description of the revision to be made and the step# it applies to, if applicable. If needed to describe the revision attach a copy of the page(s). If the revision is coming from a related document such as a Discrepancy Report or an Engineering Order attach a copy of that document to the Revision Request Form.

4) Originator: - Originator is the person generating the form. (Select Name from List)

5) Responsible Authority: - Responsible Authority is person responsible for the process in question. (Select Name from List)

Process Engineering Office Instructions:

1) Revision Incorporated into the Traveler: - Signature of the individual who incorporated the revision.

2) Process Engineering Final Review: - Review the Traveler or Document revised, sign and date the form. The original completed Revision Request Form will be retained by the Process Engineering Office in the Revision Request Binder.

Added Step Per TRR No. 1586

3.1 Record the Vacuum Vessel Serial Number.

Q2-2

Technician(s)

12/5/03
Date

3.0 Vacuum Vessel Preparation and Painting

3.1 Add Insertion Rails per Vacuum Vessel Assembly (ME-390129).

Technician(s) _____ Date 9/4/02

3.2 Leak Check the Vacuum Vessel Assembly (ME-390003) per ES-107240 and record results in table below.

PART NO. 390129B				DETERMINATION OF MINIMUM DETECTABLE LEAK				
DATE TIME	OPERATOR'S LAST NAME	SCALE UNITS BEFORE HELIUM PROBE	SCALE UNITS WHILE ENCLOSURE FLOODING	MDS = ((Response - Bckgnd) ÷ Leak Value) = MDL				
9.4.02	Juanic	43	43	2	150	43	2.85E-8	5.33E-10
							___ x E⁻⁸	___ x E⁻

Inspector _____ Date 9/4/02

3.3 Prepare the outside of the Vacuum Vessel (ME-390003) for painting with Ethyl Alcohol (Fermi stock 1920-0550) and Kimwipes (Fermi stock 1660-2500) or equivalent.

Technician(s) L. Ruiz Date 9/4/02

3.4 Mask the Stainless Steel Components of the Vacuum Vessel for painting.

Technician(s) L. Ruiz Date 9/4/02

3.5 Prime the Vacuum Vessel using Rust-o-leum (Fermi stock 1825-4000).

Technician(s) L. Ruiz Date 9/5/02

The Vacuum Vessel (ME-390129) originally used for LQXB02 will be used for LQXB04.

15.0 Final Electrical Inspection

15.1 Perform an electrical inspection on each of the Individual Quadrants and the Cold Masses. Refer to the Valhalla and Leader Free Standing Coil Measurement Procedure (ES-292306).

To measure the resistance of a bussed Q2:

1. Use Valhalla Scientific 4300B digital micro-ohmmeter.
2. Set Test Current to 1 amp.
3. Set Scale to 2V full scale.
4. Turn temperature compensation on.
5. Turn test current off.
6. Put jumper between Q2a Q3 inner power lead and 5 KA bus as shown in figure.
7. Connect I_{HI} to the 5KA bus (Q2a Q3 inner power lead) as shown in figure.
8. Connect I_{LO} to the Q2b Q3 inner power lead as shown in figure.
9. Turn test current on.
10. Connect V_{HI} and V_{LO} buttons to voltage taps as shown below.
11. Read resistance and record in traveler.

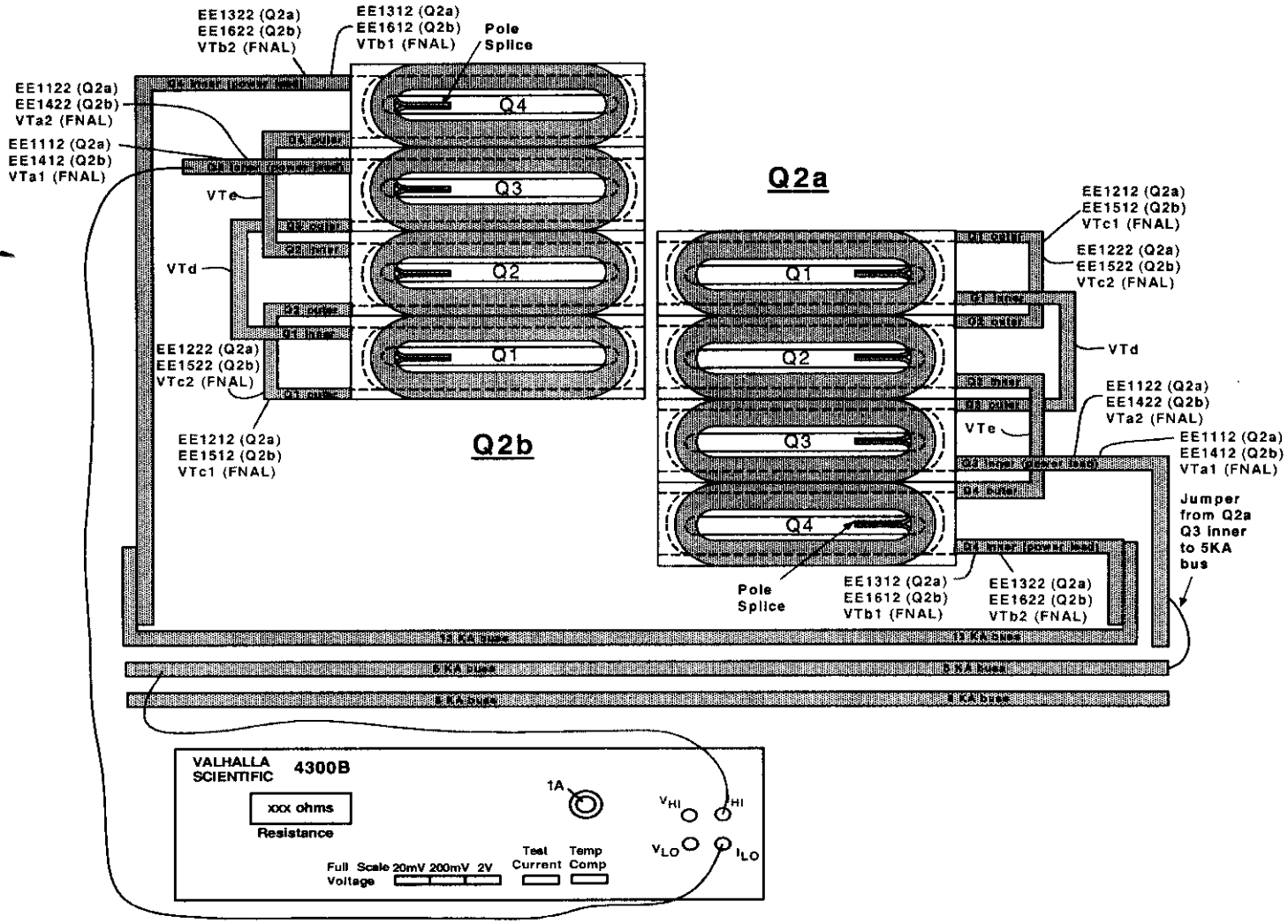

(Q2a) Resistance			Nominal ~ 560 to 585 mΩ
Voltage Tap Serial Numbers			Quadrant Total Resistance
Fermi	CERN	Quadrant	
VTc1Q2a	EE1212	Quadrant 1	572.6 mΩ
VTdQ2a	EMPTY		
VTc1Q2a	EE1212	Quadrant 2	572.4 mΩ
VTeQ2a	EMPTY		
VTdQ2a	EMPTY	Quadrant 3	572.2 mΩ
VTa1Q2a	EE1112		
VTb1Q2a	EE1312	Quadrant 4	572.2 mΩ
VTeQ2a	EMPTY		

VTa1Q2a	EE1112	Total Cold Mass	Nominal ~ 2.305 Ω
VTb1Q2a	EE1312		2.290 Ω

Technician(s) _____ Date 1/14/09

Check resistance of Redundant Voltage Taps.

Q2a Redundant Voltage Taps		
Fermi	CERN	Resistance
VTa2Q2a	EE1122	1.144 Ω
VTc2Q2a	EE1222	
VTb2Q2a	EE1322	1.144 Ω
VTc2Q2a	EE1222	

Technician(s) _____ Date 1/14/09

To measure Ls and Q of a Bussed Q2:

1. Use Hewlett Packard HP4284A digital LCR meter.
2. Turn line switch to on. The words "Measurement Display" should now be highlighted in the upper left corner of the display screen.
3. Use cursor buttons (shown in figure with arrows) to toggle down until "function" is highlighted near the upper left corner of the display screen.
4. Push the lowest of the five buttons to the right of display 3 times. (this button is shaded gray in the figure) The line in the display screen next to the second button down should now read "Ls-Q" and "function" near the upper left corner of the display should have the option "Ls-Q" chosen.
5. Scroll to "integer" using the cursor buttons. "Integer" will have the option "medium" chosen.
6. Press the 3rd button of five. The word "medium" should change to "long".
7. Connect H_{cur} to the 5KA bus (Q2a/Q3 inner power lead as shown in figure).
8. Connect L_{cur} to Q2b/Q3 inner power lead as shown in figure.
9. Connect H_{pot} and L_{pot} buttons to voltage taps as shown below.
10. Read Ls and Q from display and record in traveler.

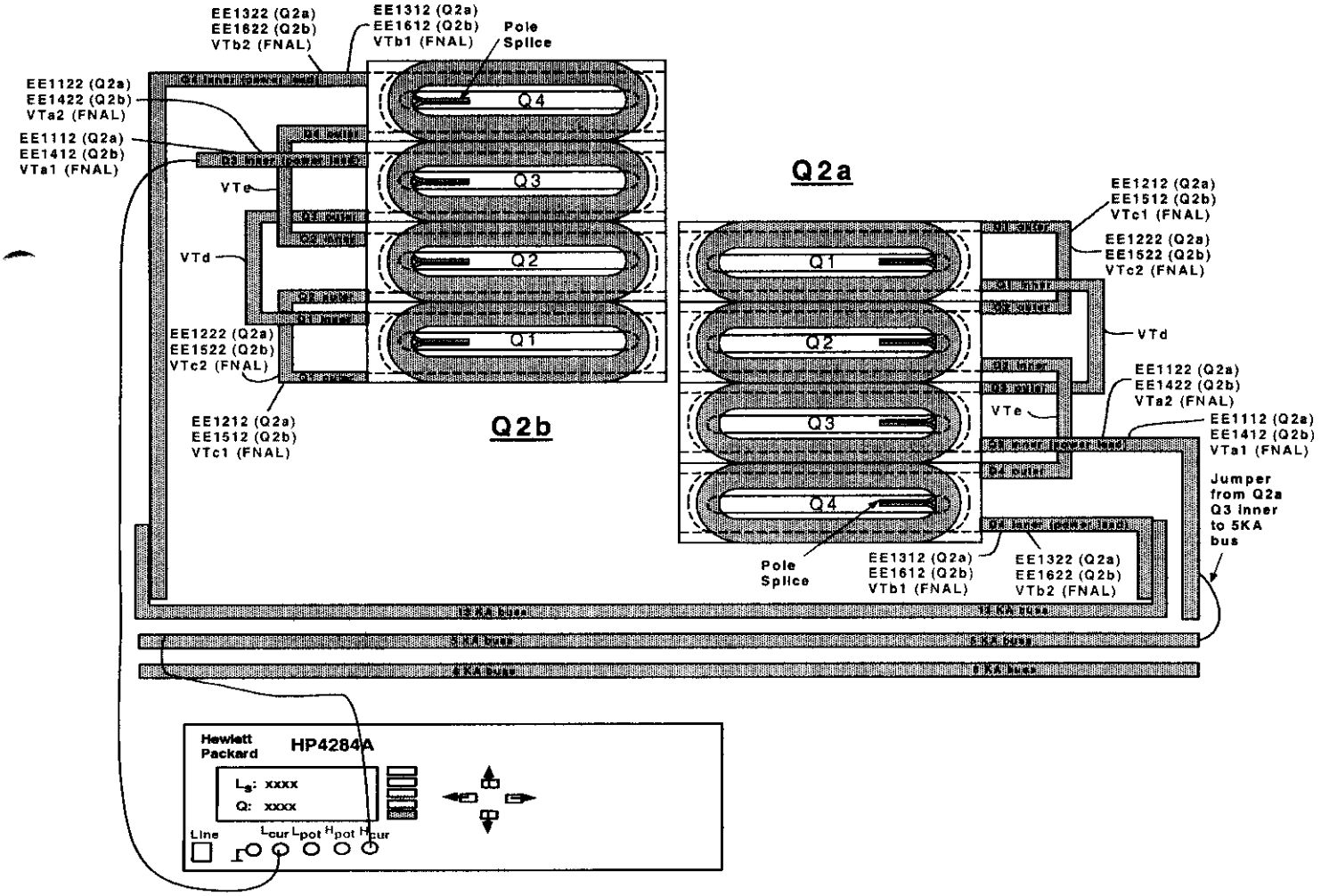

(Q2a) Inductance			Nominal ~ 2.880 to 2.935 mH
Voltage Tap Serial Numbers			Quadrant Total Inductance
Fermi	CERN	Quadrant	
VTc1Q2a	EE1212	Quadrant 1	4.1235 ~~3.4749~~ mH
VTdQ2a	EMPTY		
VTc1Q2a	EE1212	Quadrant 2	3.4749 mH
VTeQ2a	EMPTY		
VTdQ2a	EMPTY	Quadrant 3	5.2784 mH
VTa1Q2a	EE1112		
VTb1Q2a	EE1312	Quadrant 4	3.3964 mH
VTeQ2a	EMPTY		

VTa1Q2a	EE1112	Total Cold Mass	Nominal ~ 13.3376 mH
VTb1Q2a	EE1312		13.578 mH

(Q2a) Q-Factor			Nominal ~ 4.5 to 5.2
Voltage Tap Serial Numbers			Quadrant Total Q
Fermi	CERN	Quadrant	
VTc1Q2a	EE1212	Quadrant 1	~~3.9~~ 4.1
VTdQ2a	EMPTY		
VTc1Q2a	EE1212	Quadrant 2	3.9
VTeQ2a	EMPTY		
VTdQ2a	EMPTY	Quadrant 3	4.4
VTa1Q2a	EE1112		
VTb1Q2a	EE1312	Quadrant 4	3.8
VTeQ2a	EMPTY		

VTa1Q2a	EE1112	Total Cold Mass	Nominal ~ 5.036
VTb1Q2a	EE1312		3.8

Technician(s) _____ Date 1/14/04

Q2a Strip Heater Resistance				
Fermi	CERN	Description	Limit	Resistance
H1aQ2a	YT1112+	Circuit A	18.20 to 21 Ω	19.003 Ω
H2aQ2a	YT1112-			
H1bQ2a	YT1122+	Circuit B	18.20 to 21 Ω	19.131 Ω
H2bQ2a	YT1122-			

Technician(s) _____ Date 1/14/04

To measure the resistance of a bussed Q2:

1. Use Valhalla Scientific 4300B digital micro-ohmmeter.
2. Set Test Current to 1 amp.
3. Set Scale to 2V full scale.
4. Turn temperature compensation on.
5. Turn test current off.
6. Put jumper between Q2a Q3 inner power lead and 5 KA bus as shown in figure.
7. Connect I_{HI} to the 5KA bus (Q2a Q3 inner power lead) as shown in figure.
8. Connect I_{LO} to the Q2b Q3 inner power lead as shown in figure.
9. Turn test current on.
10. Connect V_{HI} and V_{LO} buttons to voltage taps as shown below.
11. Read resistance and record in traveler.

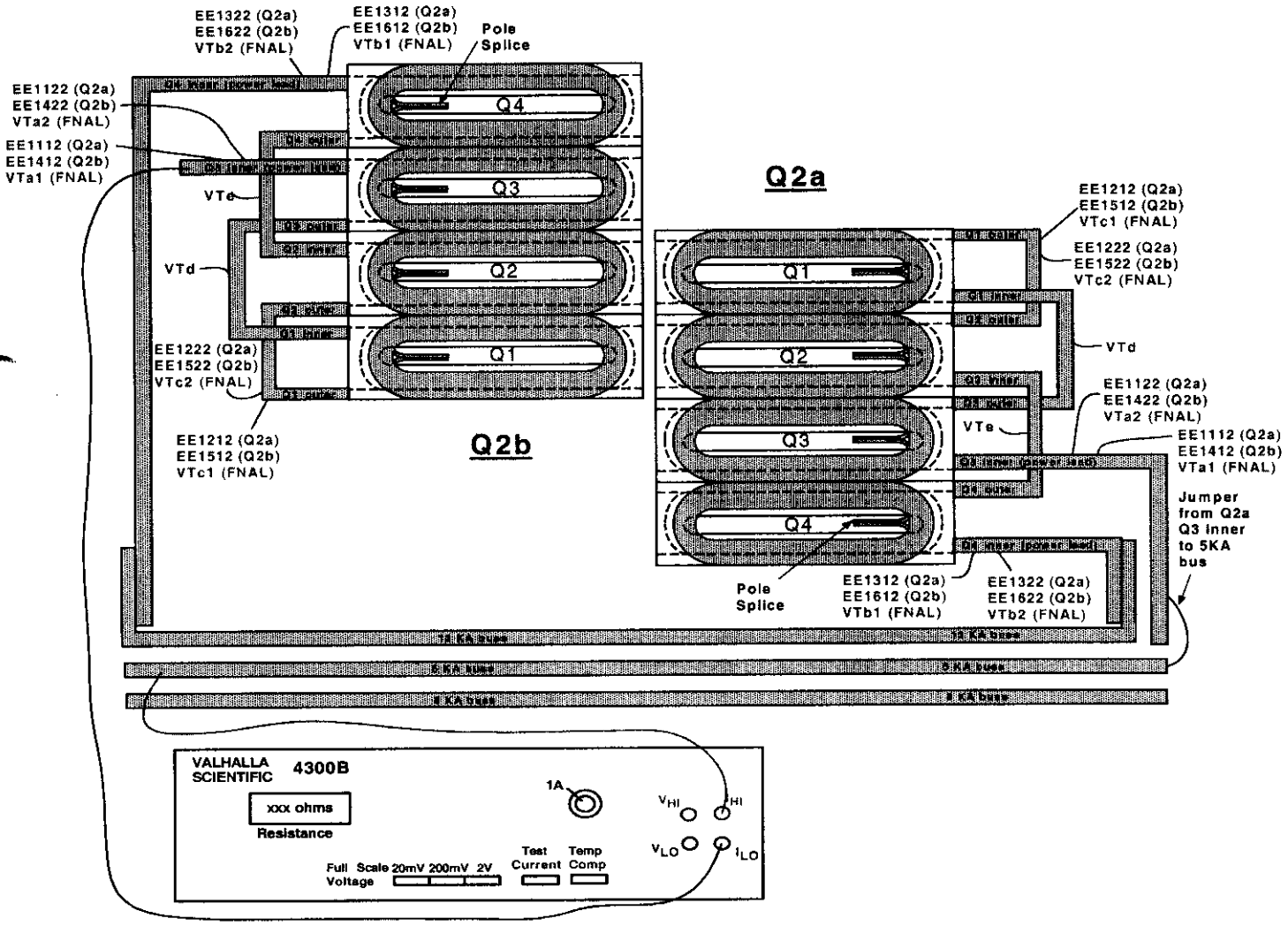

(Q2b) Resistance			Nominal ~ 560 to 585 mΩ
Voltage Tap Serial Numbers			Quadrant Total Resistance
Fermi	CERN	Quadrant	
VTc1Q2b	EE1512	Quadrant 1	570.5 mΩ
VTdQ2b	EMPTY		
VTeQ2b	EMPTY	Quadrant 2	570.7 mΩ
VTc1Q2b	EE1512		
VTa1Q2b	EE1412	Quadrant 3	570.5 mΩ
VTdQ2b	EMPTY		
* VTb1Q2b	EE1612	Quadrant 4	570.2 mΩ
VTeQ2b	EMPTY		

VTa1Q2b	EE1412	Total Cold Mass	Nominal ~ 2.305 Ω
VTb1Q2b	EE1612		2.283 Ω

Technician(s) _____ Date 1/14/04

Check the resistance of Redundant Voltage Taps.

Q2b Redundant Voltage Taps		
Fermi	CERN	Resistance
VTa2Q2b	EE1422	1.140 Ω
VTc2Q2b	EE1522	
VTb2Q2b	EE1622	1.140 Ω
VTc2Q2b	EE1522	

Technician(s) _____ Date 1/14/04

To measure Ls and Q of a Bussed Q2:

1. Use Hewlett Packard HP4284A digital LCR meter.
2. Turn line switch to on. The words "Measurement Display" should now be highlighted in the upper left corner of the display screen.
3. Use cursor buttons (shown in figure with arrows) to toggle down until "function" is highlighted near the upper left corner of the display screen.
4. Push the lowest of the five buttons to the right of display 3 times. (this button is shaded gray in the figure) The line in the display screen next to the second button down should now read "Ls-Q" and "function" near the upper left corner of the display should have the option "Ls-Q" chosen.
5. Scroll to "integer" using the cursor buttons. "Integer" will have the option "medium" chosen.
6. Press the 3rd button of five. The word "medium" should change to "long".
7. Connect H_{cur} to the 5KA bus (Q2a/Q3 inner power lead as shown in figure).
8. Connect L_{cur} to Q2b/Q3 inner power lead as shown in figure.
9. Connect H_{pot} and L_{pot} buttons to voltage taps as shown below.
10. Read Ls and Q from display and record in traveler.

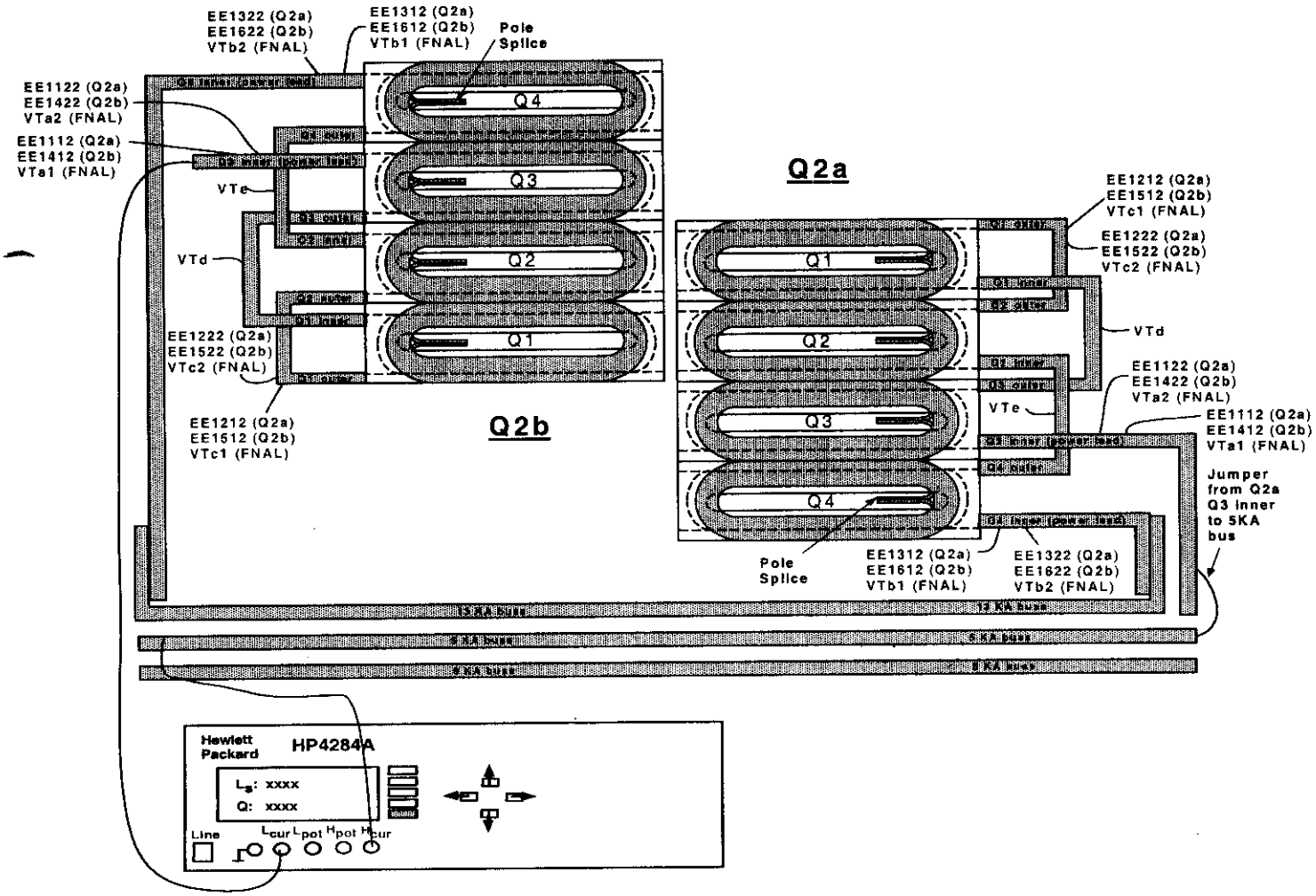

(Q2b) Inductance			Nominal ~ 2.880 to 2.935 mH
Voltage Tap Serial Numbers			Quadrant Total Inductance
Fermi	CERN	Quadrant	
VTc1Q2b	EE1512	Quadrant 1	3.4069 mH
VTdQ2b	EMPTY		
VTeQ2b	EMPTY	Quadrant 2	3.4164 mH
VTc1Q2b	EE1512		
VTa1Q2b	EE1412	Quadrant 3	3.3606 mH
VTdQ2b	EMPTY		
VTb1Q2b	EE1612	Quadrant 4	3.3893 mH
VTeQ2b	EMPTY		

VTa1Q2b	EE1412	Total Cold Mass	Nominal ~ 13.3376 mH
VTb1Q2b	EE1612		13.574 mH

(Q2b) Q-Factor			Nominal ~ 4.5 to 5.2
Voltage Tap Serial Numbers			Quadrant Total Q
Fermi	CERN	Quadrant	
VTc1Q2b	EE1512	Quadrant 1	3.8
VTdQ2b	EMPTY		
VTeQ2b	EMPTY	Quadrant 2	3.8
VTc1Q2b	EE1512		
VTa1Q2b	EE1412	Quadrant 3	3.8
VTdQ2b	EMPTY		
VTb1Q2b	EE1612	Quadrant 4	3.8
VTeQ2b	EMPTY		

VTa1Q2b	EE1412	Total Cold Mass	Nominal ~ 5.036
VTb1Q2b	EE1612		3.8

Technician(s) _____ Date 1/14/04

Q2b Strip Heater Resistance				
Fermi	CERN	Description	Limit	Resistance
H1aQ2b	YT1132+	Circuit A	18.20 to 21 Ω	18.2233 Ω
H2aQ2b	YT1132-			
H1bQ2b	YT1142+	Circuit B	18.20 to 21 Ω	18.2918 Ω
H2bQ2b	YT1142-			

Technician(s) _____ Date 1/14/04

To measure the resistance of a Thermometer (RTD):

1. Use Hewlett Packard HP3457A digital multimeter.
2. Record temperature of building within +/- 5 degrees.
3. Press line button to turn line on.
4. Connect wires as shown in Figure below.
   U+ (Black) to Sense HI
   I+ (Yellow) to Input HI
   U- (Red) to Sense LO
   I- (Green) to Input LO
5. Push blue button (function key) once.
6. Push OHMF button.
7. Verify arrow in readout is above the 4W□ (meaning a 4 wire resistance measurement).
8. Read resistance in ohms and record in traveler.

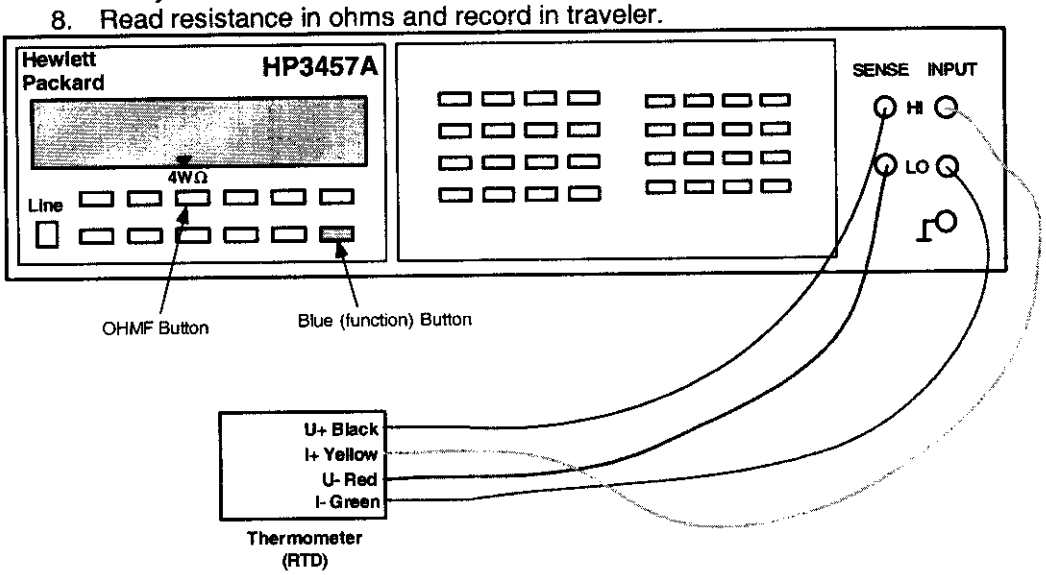

To measure the resistance of a Cryogenic (Warm-up) Heater

1. Use Hewlett Packard HP3457A digital multimeter.
2. Record temperature of building within +/- 5 degrees.
3. Press line button to turn line on.
4. Connect wires as shown in Figure below.
5. Push blue button (function key) once.
6. Push OHMF button.
7. Verify arrow in readout is above the 4W□ (meaning a 4 wire resistance measurement).
   Note: Although this is technically a 4 wire measurement, it is effectively a 2 wire measurement, since there are only 2 wires connected to each heater.
8. Read resistance in ohms and record in traveler.

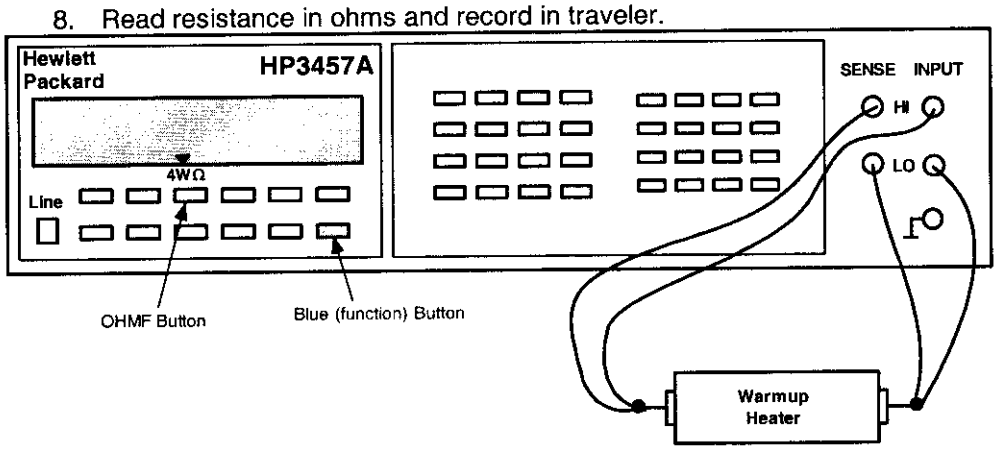

Q2a - RTD's and Cryogenic (warm-up) Heaters			
Temperature of Building (+/- 5°): 68°			
Component	**Fermi**	**CERN**	**Resistance**
Q2a RTD, primary	TaQ2a	TT8312	143.260 Ω
Q2a RTD, redundant	TbQ2a	TT8322	94.181 Ω
Q2A Cryogenic (warm-up) Heater (LE) - wire toward cold mass end plate (CERN #1 I+)	W1aQ2A	EH8312+	18.1518 Ω
Q2A Cryogenic (warm-up) Heater (LE) - wire toward cold mass mag center (CERN #1 I-)	W2aQ2A	EH8312-	
Q2A Cryogenic (warm-up) Heater (Non-LE) - wire toward cold mass end plate (CERN #2 I+)	W1bQ2A	EH8322+	17.8026 Ω
Q2A Cryogenic (warm-up) Heater (Non-LE) - wire toward cold mass mag center (CERN #2 I-)	W2bQ2A	EH8322-	

Technician(s) Date 1/14/04

Q2b - RTD's and Cryogenic (warm-up) Heaters			
Temperature of Building (+/- 5°): 68°			
Component	**Fermi**	**CERN**	**Resistance**
Q2b RTD, primary	TaQ2b	TT8332	66.913 Ω
Q2b RTD, redundant	TbQ2b	TT8342	66.328 Ω
Q2B Cryogenic (warm-up) Heater (LE) - wire toward cold mass end plate (CERN #1 I+)	W1aQ2B	EH8312+	17.3854 Ω
Q2B Cryogenic (warm-up) Heater (LE) - wire toward cold mass mag center (CERN #1 I-)	W2aQ2B	EH8332 EH8312-	
Q2B Cryogenic (warm-up) Heater (Non-LE) - wire toward cold mass end plate (CERN #2 I+)	W1bQ2B	EH8322+	17.7198 Ω
Q2B Cryogenic (warm-up) Heater (Non-LE) - wire toward cold mass mag center (CERN #2 I-)	W2bQ2B	EH8322-	

EH 8342

Technician(s) Date 1/14/04

Q1 Taps Continuity Check Sheet

M2	1	VTa1Q1	EE1111	a1	Q1 Lead Voltage Tap "a", primary	✓
M2	2	VTa2Q1	EE1121	a2	Q1 Lead Voltage Tap "a",redundant	✓
M2	3	VTc1Q1	EE1211	c1	Q1 Center Voltage Tap "c", primary	✓
M2	4	VTc2Q1	EE1221	c2	Q1 Center Voltage Tap "c", redundant	✓
M2	5	VTb1Q1	EE1311	b1	Q1 Lead Voltage Tap "b", primary	✓
M3	5	VTb2Q1	EE1321	b2	Q1 Lead Voltage Tap "b",redundant	✓
M5	1	VTH1	EE8121		Corrector voltage tap Q1-H1 (skew dipole) (on MCBX, MCBXH, A+ lead)	✓
M5	2	VTV1	EE8111		Corrector voltage tap Q1-V1 (normal dipole) (on MCBX, MCBXV A+ lead)	✓
M7	1	W1aQ1	EH8311+		Q1 Cryogenic Heater lead end - wire at top (CERN #1 I+)	✓
M7	2	W2aQ1	EH8311-		Q1 Cryogenic Heater lead end - wire at bottom (CERN #1 I-)	✓
M7	3	W1bQ1	EH8321+		Q1 Cryogenic Heater non-lead end - wire at top (CERN #2 I+)	✓
M7	4	W2bQ1	EH8321-		Q1 Cryogenic Heater non-lead end - wire at bottom (CERN #2 I-)	✓
M9	1	H1aQ1	YT1111+	HA1	Q1 Protection (Strip) Heater, ("a" circuit) (CERN lead #1+)	✓
M9	3	H2aQ1	YT1111-	HA2	Q1Protection (Strip) Heater, ("a" circuit) (CERN lead #1-)	✓
M9	5	H1bQ1	YT1121+	HB1	Q1 Protection (Strip) Heater, ("b" circuit) (CERN lead #2+)	✓
M10	4	H2bQ1	YT1121-	HB2	Q1 Protection (Strip) Heater, ("b" circuit) (CERN lead #2-)	✓
M12	1	TaQ1_I+	TT8311 I+		Q1 RTD, primary Wire color: Yellow	✓
M12	2	TaQ1_I-	TT8311 I-		Q1 RTD, primary Wire color: Green	✓
M12	3	TaQ1_V+	TT8311 U+		Q1 RTD, primary Wire color: Black	✓
M12	4	TaQ1_V-	TT8311 U-		Q1 RTD, primary Wire color: Red	✓
M12	5	TbQ1_I+	TT8321 I+		Q1 RTD, primary Wire color: Yellow	✓
M12	6	TbQ1_I-	TT8321 I-		Q1 RTD, primary Wire color: Green	✓
M12	11	TbQ1_V+	TT8321 U+		Q1 RTD, primary Wire color: Black	✓
M12	10	TbQ1_V-	TT8321 U-		Q1 RTD, primary Wire color: Red	✓

Technician(s) [illegible] **Date** 1/14/04

15.2 Using the HP3457A, connect power thru the connector Power Leads (HA2 and HB2 to measure Q2-H2 or VA2 and VB2 to measure Q2-V2). Connect the Sense Leads as shown in table below and record resistance.

(Magnet Bus Leads)

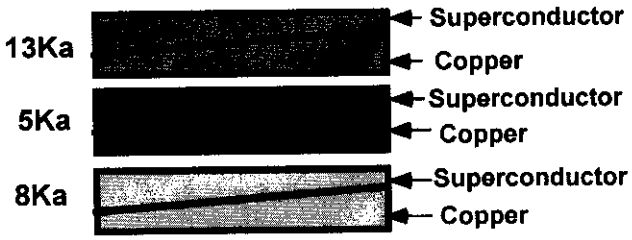

(Corrector Bus Leads)

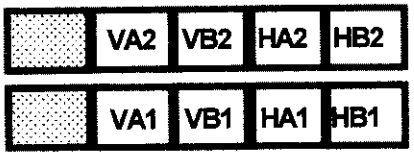

(View Looking into Q2b)

MCBX Corrector Coil Taps			
Component	**FermiLab Label**	**CERN Label**	**Resistance**
Q2-H2	**VTH2**	**EE8122**	1.5047 Ω
	HA2	**N/A**	
Q2-V2	**VTV2**	**EE8112**	1.5462 Ω
	VA2	**N/A**	

Technician(s) Date 1/14/04

XXX 15.3 Hipot according to table below. Hipot to 5kV. Maximum leakage is 3μA.

Hipot Heaters to Coil and Ground.

High Potential	Grounded	Floating	Leakage
All Strip Heaters	Coils, Yoke, Q1 Instrumentation Bus, Lead and Corrector Coil Busses.	RTD's and Warm-up Heaters	

Hipot Coil to Heaters and Ground.

High Potential	Grounded	Floating	Leakage
All Coils	Strip Heaters, Yoke, Q1 Instrumentation Bus, 8kA and 5kA Lead Busses and Corrector Coil Busses.	RTD's and Warm-up Heaters	

N/A

Technician(s) Date

Responsible Authority/Physicist Date

Fermilab

Date: 12/18/2003

EXHIBIT B
Pressure Testing Permit*

Type of Test: [ ]Hydrostatic [X] Pneumatic

Test Pressure 363 psig **Maximum Allowable Working Pressure** 290 psig

Items to be Tested
LHC IRQ cold mass (Q2-4) with the domes and external heat exchanger pipe attached.

Location of Test ICB **Date and Time** 12/19/2003 @ 4:00 pm

Hazards Involved
High pressure gases, unrestrained pipes, potential flying debris.

Safety Precautions Taken
Engineering design and evaluation, limited personnel access, mechanical barricade, relief valve, operate gas from inside of tech. room, use sight glass, etc. to observe pressure gauge.

Special Conditions or Requirements
Test to be performed during non-working hours, only personnel directly involved in the test will be present, the access doors to the high bay area will be locked or guards will be posted to prevent entrance to the area.

Qualified Person and Test Coordinator Thomas Page Thomas Page 12/18/03
Dept/Date Technical Division/ Eng. & Fab.

Division/Section Safety Officer Richard Rutke
Dept/Date TD ES&H Group 12/18/03

Results

Witness _____ **Dept/Date** _____
(Safety Officer or Designee)

* Must be signed by division/section safety officer prior to conducting test. It is the responsibility of the test coordinator to obtain signatures.

Traveler Title:	Specification No:	Revision:	DR No:
Q2 LQXB Cryostat Final Assembly Traveler	5520-TR-333644	C	HGQ-0441

Step No:	Drawing No:	Routing Form No:	Serial No:	Rework ID:
6.9	390206		LQXB04	0

Discrepancy Description:

Looking toward the non-IP end from the IP end, the second top shield on the left side has a screw broken off. The screw is the second one from the cooling tube (390165) going up on the shield next to the middle shield.

Originator: Steve Gould

Date: 1/7/2004

Cause of Nonconformance:

Screw galled up and broke in the PEM nut.

Responsible Authority: Thomas Page

Date: 1/12/2004

Disposition:

Leave broken screw in shield. Do not replace screw.

Responsible Authority: Thomas Page

Date: 1/12/2004

Corrective Action to Prevent Recurrence:

Tap the PEM nuts prior to installing shield. Use care in tightening screws so they don't break.

Responsible Authority: Thomas Page

Date: 1/12/2004

Corrective Action/Disposition Verified By: John Szostak

Date: 1/13/2004

Will Configuration be affected?: ☐ YES ☑ NO

Identified problem area:

☐ Material ☐ Manpower ☑ Method ☐ Machine ☐ Measurement

Reviewed By: Bob Jensen

Date: 1/27/2004

Traveler Title:	Specification No:	Revision:	DR No:
Q2 LQXB Cryostat Final Assembly Traveler	5520-TR-333644	C	HGQ-0442

Step No:	Drawing No:	Routing Form No:	Serial No:	Rework ID:
7.9	390206		LQXB04	0

Discrepancy Description:

On the non-IP end, the bottom adjusting screw (MB-390039) seized up while turning it. Facing the non-IP end, it's the bottom right screw, closest to the end.

Originator: Steve Gould

Date: 1/12/2004

Cause of Nonconformance:

Adjusting screw galled up in vacuum vessel.

Responsible Authority: Thomas Page

Date: 1/12/2004

Disposition:

Remove screw, re-tap the vacuum vessel and replace the adjusting screw with a new one. The old adjusting screw is scrap.

Responsible Authority: Thomas Page

Date: 1/12/2004

Corrective Action to Prevent Recurrence:

Ensure proper lubrication on adjusting screws. Check threads on screw and vacuum vessel prior to assembly and fix if necessary. (TRR No. 1586)

Responsible Authority: Thomas Page

Date: 1/12/2004

Corrective Action/Disposition Verified By: John Szostak

Date: 1/13/2004

Will Configuration be affected?: ☐ YES ☑ NO

Identified problem area:

☐ Material ☐ Manpower ☑ Method ☐ Machine ☐ Measurement

Reviewed By: Bob Jensen

Date: 1/27/2004

Leak Tickets

PART NO. 390165		SCALE UNITS BEFORE HELIUM PROBE	SCALE UNITS WHILE ENCLOSURE FLOODING	DETERMINATION OF MINIMUM DETECTABLE LEAK				
DATE / TIME	OPERATOR'S LAST NAME			MDS ÷ ((Response - Bckgnd) ÷ Leak Value) = MDL				
3.20.02	Jmanic	31	31	2	250	31	2.25E-8	2.05E-10

PART NO. 390198A		SCALE UNITS BEFORE HELIUM PROBE	SCALE UNITS WHILE ENCLOSURE FLOODING	DETERMINATION OF MINIMUM DETECTABLE LEAK				
DATE / TIME	OPERATOR'S LAST NAME			MDS ÷ ((Response - Bckgnd) ÷ Leak Value) = MDL				
5.7.2	Jmanic	64	64	2	270	64	2.25E-8	2.18E-10

PART NO. 390197B		SCALE UNITS BEFORE HELIUM PROBE	SCALE UNITS WHILE ENCLOSURE FLOODING	DETERMINATION OF MINIMUM DETECTABLE LEAK				
DATE / TIME	OPERATOR'S LAST NAME			MDS ÷ ((Response - Bckgnd) ÷ Leak Value) = MDL				
6.24.02	Jmanic	28	28	2	250	28	2.47E-8	2.23E-10

PART NO. 390112B		SCALE UNITS BEFORE HELIUM PROBE	SCALE UNITS WHILE ENCLOSURE FLOODING	DETERMINATION OF MINIMUM DETECTABLE LEAK				
DATE / TIME	OPERATOR'S LAST NAME			MDS ÷ ((Response - Bckgnd) ÷ Leak Value) = MDL				
8.6.02	Jmanic	36	36	2	270	36	2.47E-8	2.11E-10

LQXB04 Q2-04

Leak Tickets

PART NO. M0390 253 Bellows only		SCALE UNITS BEFORE HELIUM PROBE	SCALE UNITS WHILE ENCLOSURE FLOODING	DETERMINATION OF MINIMUM DETECTABLE LEAK				
DATE TIME	OPERATOR'S LAST NAME			MDS ÷ ((Response - Bckgnd) ÷ Leak Value) = MDL				
8/7/03	Jamo	24	24	2	440	24	10-8 4.46	E-10 2.14

PART NO. 390253A		SCALE UNITS BEFORE HELIUM PROBE	SCALE UNITS WHILE ENCLOSURE FLOODING	DETERMINATION OF MINIMUM DETECTABLE LEAK				
DATE TIME	OPERATOR'S LAST NAME			MDS ÷ ((Response - Bckgnd) ÷ Leak Value) = MDL				
7.30.02	Jmanc	63	63	2	300	63	2.47E-8	2.08E-10

PART NO. 390147		SCALE UNITS BEFORE HELIUM PROBE	SCALE UNITS WHILE ENCLOSURE FLOODING	DETERMINATION OF MINIMUM DETECTABLE LEAK				
DATE TIME	OPERATOR'S LAST NAME			MDS ÷ ((Response - Bckgnd) ÷ Leak Value) = MDL				
5.14.02	Jmanc	[illegible]	51	2	250	51	2.25E-8	2.26E-10

PART NO. 390146		SCALE UNITS BEFORE HELIUM PROBE	SCALE UNITS WHILE ENCLOSURE FLOODING	DETERMINATION OF MINIMUM DETECTABLE LEAK				
DATE TIME	OPERATOR'S LAST NAME			MDS ÷ ((Response - Bckgnd) ÷ Leak Value) = MDL				
6.5.02	Jmanc	38	38	2	260	38	2.47E-8	2.23E-10

PART NO. 390145B		SCALE UNITS BEFORE HELIUM PROBE	SCALE UNITS WHILE ENCLOSURE FLOODING	DETERMINATION OF MINIMUM DETECTABLE LEAK				
DATE TIME	OPERATOR'S LAST NAME			MDS ÷ ((Response - Bckgnd) ÷ Leak Value) = MDL				
7.22.02	Jmanc	20	20	2	200	20	2.47E-8	2.79E-10

PART NO. 390165		SCALE UNITS BEFORE HELIUM PROBE	SCALE UNITS WHILE ENCLOSURE FLOODING	DETERMINATION OF MINIMUM DETECTABLE LEAK				
DATE TIME	OPERATOR'S LAST NAME			MDS ÷ ((Response - Bckgnd) ÷ Leak Value) = MDL				
3.20.02	Jmanc	34	34	2	240	34	2.25E-8	2.18E-10

LQXB04 Q2-04