Document ID: 2343

LHC Q2 LQXB Cryostat Shipping Traveler

333732 / Rev. A

Job No:	**248**
E + F Project/Task No.:	**300/1.1.1.6.2**
M + S Project/Task No.:	**300/1.1.1.6.2**

Place This Side Down For Scanning!!!

LQXB04-0

Document ID:

2343

Job No.:

248

Project/Task No.

300/1.1.1.6.2

Series:

LQXB

Serial No:

LQXB04

Rework ID:

0

Specification No.:

333732

Revision:

A

LQXB04-0

Fermi National Accelerator Laboratory
Batavia, IL 60510

LARGE HADRON COLLIDER
Q2 - LQXB
SHIPPING TRAVELER

Reference Drawing(s):
Q2 Shipping Fixture Final Assembly
ME-390686
Q2 Magnet Shipping Assembly
ME-390710

Project#/Task #: 300/1.1.1.6.2	**Job #: 248**
Released By: Bob Jensen	**Magnet/Device Series: LQXB**
Date Issued: 7/13/2004 9:16:17 AM	**Scanned Pages:** 67
Prepared by: B. Jensen	

Title	Signature	Date
TD / E&F Process Engineering	*Bob Jensen* Bob Jensen / Designee	*7/12/04*
TD / LHC Production Supervisor	*Jim Rife* Jim Rife / Designee	*7/12/04*
TD / LHC Production Engineer	*Tom Page* Tom Page / Designee	*7/12/04*
TD / LHC Project Engineer Cryostat	*Tom Page* Tom Nicol / Designee	*7/12/04*
TD / LHC Project Physicist	*Michael Lamm* Michael Lamm / Designee	*7/12/04*
TD / LHC Program Manager	*Jim Kerby* Jim Kerby / Designee	*7/12/04*

Revision Page

Revision	Step No.	Revision Description	TRR No.	Date
None	N/A	Initial Release	N/A	6/28/04
A	3.8	Added Quadrant #3 Lead above 13 Ka lead	1650	7/12/04
	4.1	Remove 13 Ka lead and added Quadrant #3 lead		
	6.0	Split step. One for Q2A and one for Q2B Ls & Q readings.		
		Updated Table 6.0.1, 6.0.2, 6.0.3, 6.0.4 VPot to LPot & HPot.		
		Updated diagram/test procedure from HP to Agilent Meter		
	7.0	Updated diagram/test procedure from HP to Agilent Meter		
		Updated Nominal values in Table 7.0.5, 7.0.6, 7.0.7, & 7.0.8		
	12.5	Deleted Step		
	12.6	Deleted Step		
	12.7	Updated Step to install Bellows Protectors instead of Velco		
	12.8	Updated Step to include Kapton MA-106723 ½ lapped on leads		

Ensure appropriate memos and specific instructions are placed with the traveler before issuing the sub traveler binder to production.

1.0 General Notes

1.1 All steps that require a sign-off shall include the Technician/Technician(s)s first initial and full last name.

1.2 No erasures or white out will be permitted to any documentation. All incorrectly entered data shall be corrected by placing a single line through the error, initial and date the error before adding the correct data.

1.3 All Discrepancy Reports and Traveler Revision Requests issued shall be recorded in the left margin next to the applicable step.

1.4 Personnel shall perform all tasks in accordance with current applicable ES&H guidelines and those specified within the step.

1.5 Cover the product/assembly with Green Herculite (Fermi stock 1740-0100) when not being serviced or assembled.

2.0 Parts Kit List

2.1 Attach the completed Parts Kit for this production operation to this traveler. Ensure that the serial number on the Parts Kit matches the serial number of this traveler. Verify that the Parts Kit received is complete.

Not developed

Process Engineering/Designee

Date

3.0 Post MTF Magnet Preparation Non-IP Magnet End

3.1 Compress the bellows on the Non-IP End using Bellows Compression Tool.

3.2 Locate and identify the 13 KA Bus Leads.

Technician(s) _____ Date 9-8-04

XX 3.3 Verify the 13 KA Bus Leads have been properly identified.

Lead Person _____ Date 9-8-04

3.4 Verify the 13 KA Bus Leads have been proper identified.

Responsible Authority/Physicist _____ Date 9-8-04

3.5 Cut the 13 KA Bus Leads within 1" of the conductor connector.

3.6 Insulate the 13 KA Bus Leads using approved methods.

Technician(s) _____ Date 9-8-04

3.7 Remove the Bellows Compression Tooling.

Technician(s) _____ Date 9/8/04

3.8 Separate, identify, and label the Non-IP Magnet End Corrector leads as per ME-369895 and figure below.

Note: 120 Spliced area dimension for magnet leads does not include an approximate 40mm of extra buffer cable. Do not cut unless approved by Production Supervisor.

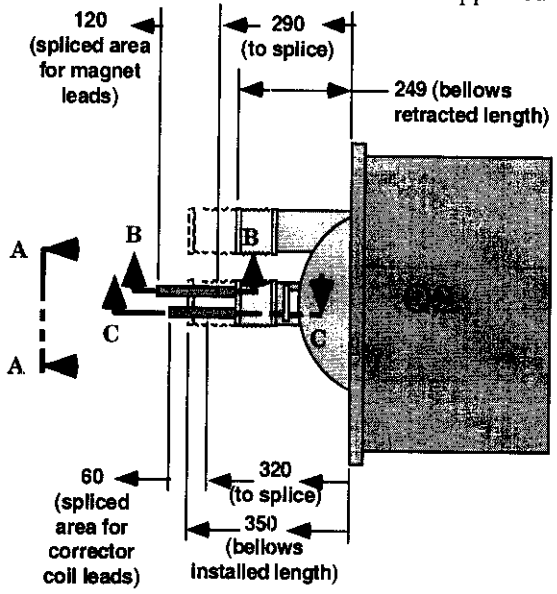

Top (plan) view of non-IP end of Q2

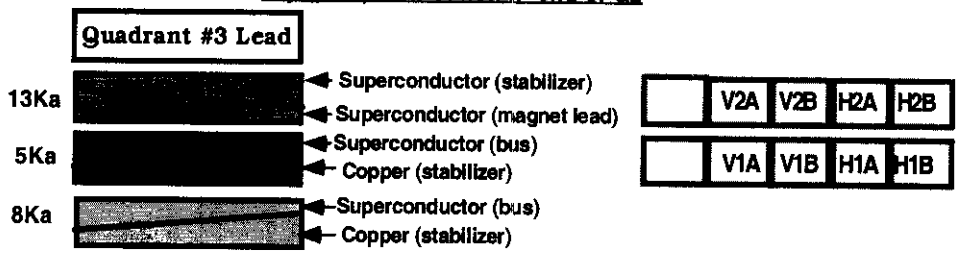

View A-A (Q2 Lead Configuration)

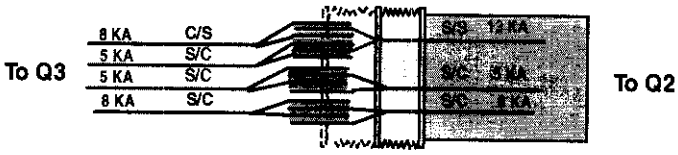

Section B-B (Magnet Lead Configuration)

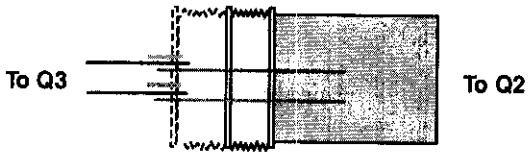

Section C-C (Corrector Bus Lead Configuration)

Note: These leads must be insulated using approved methods (refer to Lead Installation ES-XXXXXX), first as an individual lead, then insulated as a pair to prevent 'shorting' to the other leads.

Technician(s) _____ Date 9/17/04

4.0 Post MTF Magnet Preparation IP Magnet End

4.1 Separate, identify, and label the IP Magnet End Corrector leads as per Me-369895and figure below.

Note: 120 Spliced area dimension for magnet leads does not include an approximate 40mm of extra buffer cable. Do not cut unless approved by Production Supervisor.

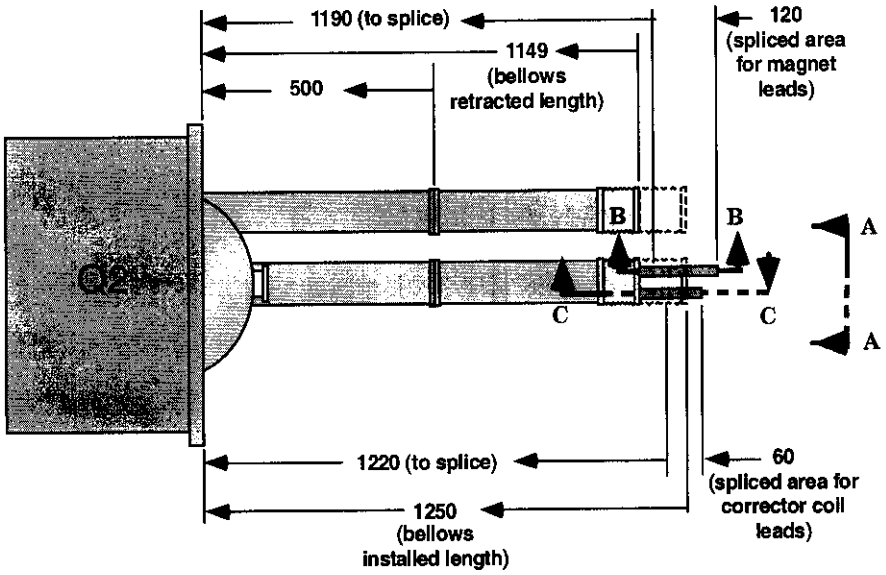

Top (plan) view of IP end of Q2

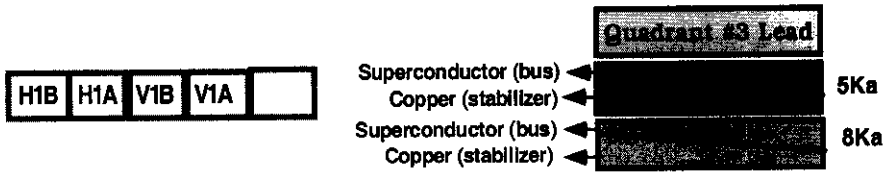

View A-A (Q2 Lead Configuration)

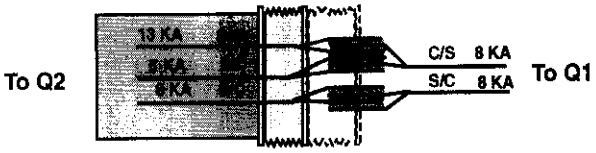

Section B-B (Magnet Lead Configuration)

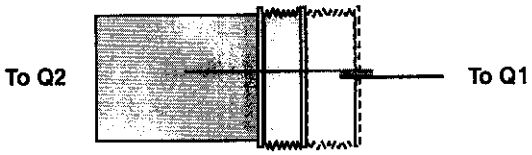

Section C-C (Corrector Bus Lead Configuration)

Note: This lead must be insulated using approved methods to prevent 'shorting' to the other leads.

Technician(s) _____ Date 9/17/04

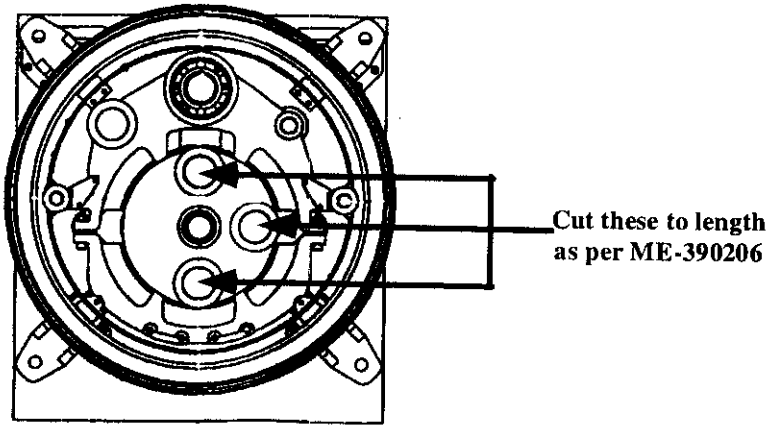

4.2 Measure and mark the XX, XX, and XX tubes for cutting as per Q2 Cyrostat Dwg (ME-390206).

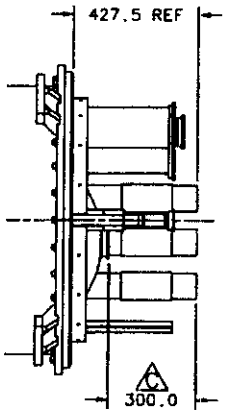

IP END
Side View

Technician(s) _____ Date 9/16/04

STOP

4.5 Verify that the XX, XX and XX tubes have been measured and marked correctly and are acceptable for cutting.

Responsible Authority/Physicist — Date: 9-16-04

4.6 Cut the XX, XX and XX tubes using approved methods.

Technician(s) — Date: 9-16-04

X 4.7 Verify the XX, XX, and XX tubes have been properly cut.

Lead Person — Date: 9/16/04

- DR
HGQ
0495

5.0 Final Resistance Electrical Inspection

5.1 Perform an electrical inspection on each of the Individual Quadrants and the Cold Masses. Refer to the Valhalla and Leader Free Standing Coil Measurement Procedure (ES292306).

To measure the resistance of a bussed Q2:

1. Use Valhalla Scientific 4300B digital micro-ohmmeter.
2. Set Test Current to 1 amp.
3. Set Scale to 2V full scale.
4. Turn temperature compensation on.
5. Turn test current off.
6. Put jumper between Q2a Quadrant #3 inner power lead and 5 KA bus as shown in figure.
7. Connect I_{HI} to the 5KA bus (Q2a Quadrant #3 inner power lead) as shown in figure.
8. Connect I_{LO} to the Q2b Quadrant #3 inner power lead as shown in figure.
9. Turn test current on.
10. Connect V_{HI} and V_{LO} buttons to voltage taps as shown below.
11. Read resistance and record in traveler.

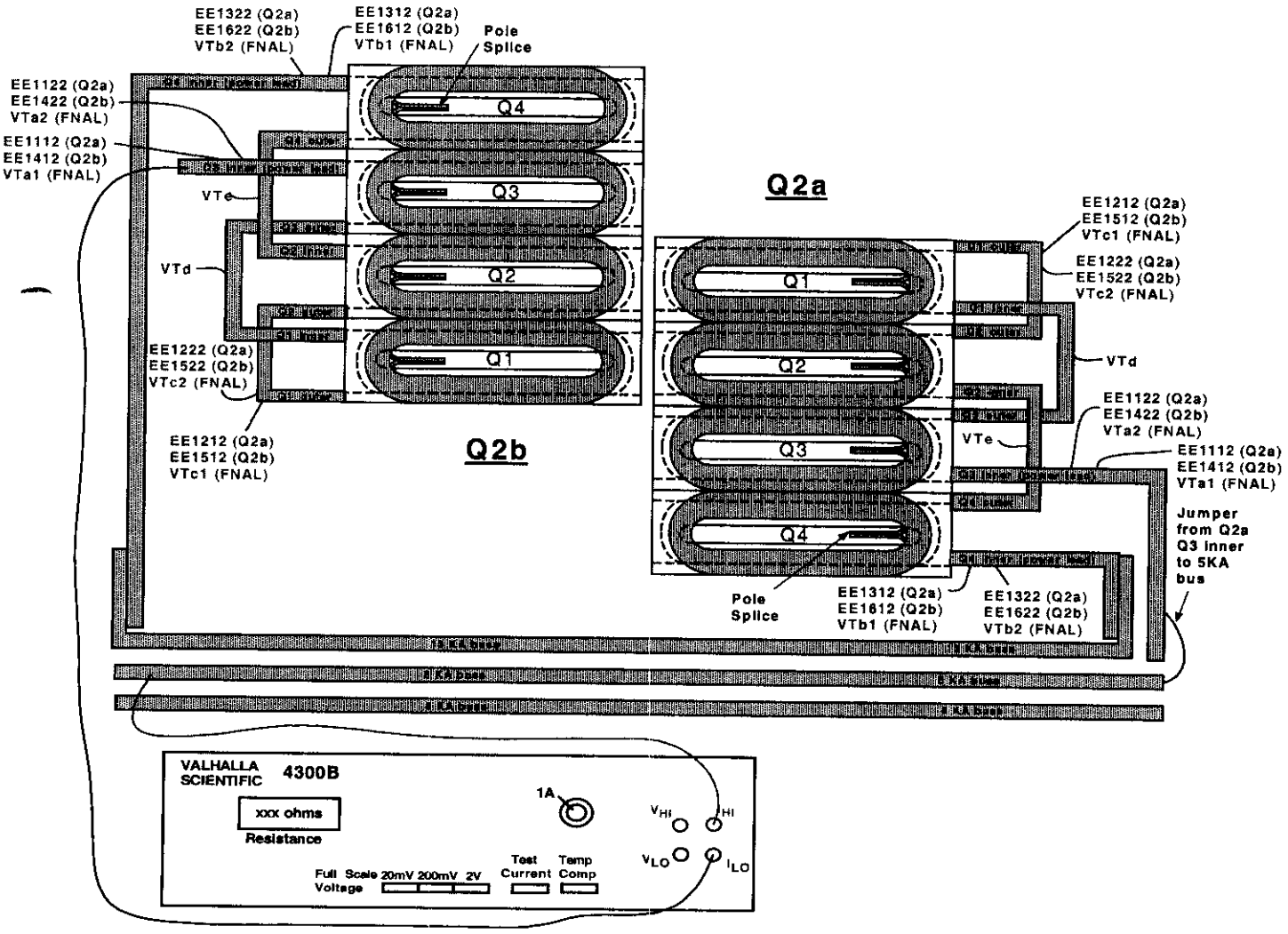

Note: Sign of resistance reading should always be positive. If negative readings notify production supervisor.

TABLE 5.0.1				
(Q2a) Resistance				Nominal ~ 560 to 585 mΩ
Voltage Tap Serial Numbers				Quadrant Total Resistance
Connect	Fermi	CERN	Quadrant	Fermi
V_{HI}	VTdQ2a	EMPTY	Quadrant 1	577.3 mΩ
V_{LO}	VTc1Q2a	EE1212		
V_{HI}	VTc1Q2a	EE1212	Quadrant 2	577.2 mΩ
V_{LO}	VTeQ2a	EMPTY		
V_{HI}	VTa1Q2a	EE1112	Quadrant 3	576.9 mΩ
V_{LO}	VTdQ2a	EMPTY		
V_{HI}	VTeQ2a	EMPTY	Quadrant 4	577.0 mΩ
V_{LO}	VTb1Q2a	EE1312		

Note: Sign of resistance reading should always be positive. If negative readings notify production supervisor.

TABLE 5.0.2				
				Fermi
V_{HI}	VTa1Q2a	EE1112	Quadrant #3 & #1	1154.1 mΩ
V_{LO}	VTc1Q2a	EE1212		Nominal ~ 1120 mΩ
V_{HI}	VTc1Q2a	EE1212	Quadrant #2 & #4	1154.1 mΩ
V_{LO}	VTb1Q2a	EE1312		Nominal ~ 1120 mΩ
V_{HI}	VTa1Q2a	EE1112	Total Cold Mass	2.310 mΩ
V_{LO}	VTb1Q2a	EE1312		Nomimal ~ 2.305 Ω

these taps already checked in S.C.

V. Rice
Technician(s)

9-8-04
Date

Check resistance of Redundant Voltage Taps.

TABLE 5.0.3			
Q2a Redundant Voltage Taps Resistance			
			Fermi
Connect	Fermi	CERN	Nominal ~1120 mΩ
V_{HI}	VTa2Q2a	EE1122	1154.3 mΩ
V_{LO}	VTc2Q2a	EE1222	
V_{HI}	VTc2Q2a	EE1222	1154.3 mΩ
V_{LO}	VTb2Q2a	EE1322	

Technician(s) 9-8-04 Date

TABLE 5.0.4				
(Q2b) Resistance				Nominal ~ 560 to 585 mΩ
Voltage Tap Serial Numbers				Quadrant Total Resistance
Connect	Fermi	CERN	Quadrant	Fermi
V_{HI}	VTc1Q2b	EE1512	Quadrant 1	576.9 mΩ
V_{LO}	VTdQ2b	EMPTY		
V_{HI}	VTeQ2b	EMPTY	Quadrant 2	577.1 mΩ
V_{LO}	VTc1Q2b	EE1512		
V_{HI}	VTdQ2b	EMPTY	Quadrant 3	576.9 mΩ
V_{LO}	VTa1Q2b	EE1412		
V_{HI}	VTb1Q2b	EE1612	Quadrant 4	576.7 mΩ
V_{LO}	VTeQ2b	EMPTY		

TABLE 5.0.5				
				Fermi
V_{HI}	VTc1Q2b	EE1512	Quadrant #1 & #3	1152.7
V_{LO}	VTa1Q2b	EE1412		Nominal ~ 1120 m Ω
V_{HI}	VTb1Q2b	EE1612	Quadrant #4 & #2	1153.8
V_{LO}	VTc1Q2b	EE1512		Nominal ~ 1120 m Ω
V_{HI}	VTb1Q2b	EE1612	Total Cold Mass	2.309
V_{LO}	VTa1Q2b	EE1412		Nominal ~ 2.305 Ω

Technician(s) Date 7-8-09

Check the resistance of the Redundant Voltage Taps.

TABLE 5.0.6			
Q2b Redundant Voltage Taps			
			Resistance
Connect	**Fermi**	**CERN**	**Fermi**
V_{HI}	VTc2Q2b	EE1522	1153.9 Ω
V_{LO}	VTa2Q2b	EE1422	
V_{HI}	VTb2Q2b	EE1622	1153.9 Ω
V_{LO}	VTc2Q2b	EE1522	

Technician(s) Date 7-8-09

6.0 Q2A Final Inductance and Q Electrical Inspection

To measure Ls and Q of a Bussed Q2a:

6.1 Use Agilent 4263B LCR Meter.
6.2 Turn power on by pushing line button. Wait 30 seconds until display screen is lit.
6.3 Recall program #1. To do this, push recall (Rcl) button, then push the #1 button, then push the Enter button.
6.4 Push Auto/Hold button to release hold.
6.5 Verify that the frequency displayed in the upper right corner of the display screen is 1000 Hz and the level recorded in the lower right corner of the display screen is 1V or 1000 mV.
6.6 Connect jumper between Q2a/Quadrant 3 inner power lead and 5KA bus as shown in figure.
6.7 Connect H_{cur} to Q2b/Quadrant 3 inner power lead as shown in figure.
6.8 Connect L_{cur} to 5KA bus as shown in figure.
6.9 Connect H_{pot} and L_{pot} buttons to voltage taps as shown below.

To measure Q2a:

- To measure Q1, connect H_{pot} to VTc1 (EE1212 for Q2a), and L_{pot} to VTd.
- To measure Q2, connect H_{pot} to VTe, and L_{pot} to VTc1 (EE1212 for Q2a).
- To measure Q3, connect H_{pot} to VTd and L_{pot} to VTa1 (EE1112 for Q2a).
- To measure Q4, connect H_{pot} to VTb1 (EE1312 for Q2a), and L_{pot} to VTe.
- To measure total, connect H_{pot} to VTb1 (EE1312 for Q2a),and L_{pot} to VTa1 (EE1112 for Q2a).

6.10 Read Ls and Q from display and record in traveler.

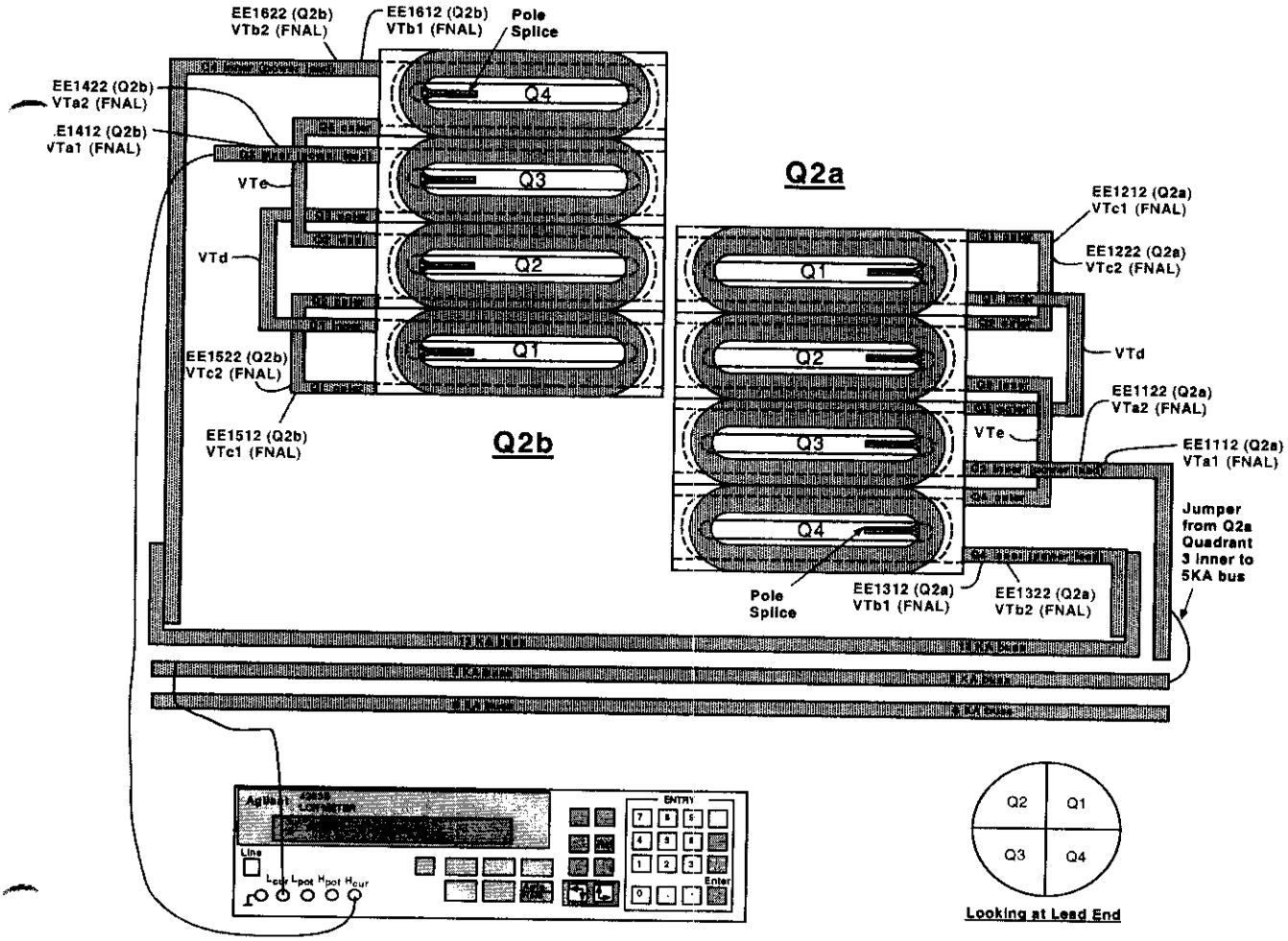

Note: All Inductance readings are taken at 1KHz.

TABLE 6.0.1				
(Q2a) Inductance				Nominal ~ 3.34 to 3.48 mH
Voltage Tap Serial Numbers				Quadrant Total Inductance
Connect	Fermi	CERN	Quadrant	Fermi
[redacted]				
LPOT	VTdQ2a	EMPTY	Quadrant 1	3.4379 mH
HPOT	VTc1Q2a	EE1212		
LPOT	VTc1Q2a	EE1212	Quadrant 2	3.4313 mH
HPOT	VTeQ2a	EMPTY		
LPOT	VTa1Q2a	EE1112	Quadrant 3	3.3819 mH
HPOT	VTdQ2a	EMPTY		
LPOT	VTeQ2a	EMPTY	Quadrant 4	3.4125 mH
HPOT	VTb1Q2a	EE1312		

TABLE 6.0.2				
[redacted]				Nominal ~ 13.28 to 13.78 mH
				Fermi
LPOT	VTa1Q2a	EE1112	Total Cold Mass	13. mH
HPOT	VTb1Q2a	EE1312		

TABLE 6.0.3				
(Q2a) Q-Factor				Nominal ~ 3.7 – 4.0
Voltage Tap Serial Numbers				Quadrant Total Q
Connect	Fermi	CERN	Quadrant	Fermi
[redacted]				
LPOT	VTdQ2a	EMPTY	Quadrant 1	3.8
HPOT	VTc1Q2a	EE1212		
LPOT	VTc1Q2a	EE1212	Quadrant 2	3.8
HPOT	VTeQ2a	EMPTY		
LPOT	VTa1Q2a	EE1112	Quadrant 3	3.8
HPOT	VTdQ2a	EMPTY		
LPOT	VTeQ2a	EMPTY	Quadrant 4	3.8
HPOT	VTb1A2a	EE1312		

[signature] 9-8-04

Technician(s) Date

TABLE 6.0.4				
				Nominal ~ 3.7 – 4.0
				Fermi
LPOT	VTa1Q2a	EE1112	Total Cold Mass	3.8
HPOT	VTb1Q2a	EE1312		

7.0 Q2B Final Inductance and Q Electrical Inspection

To measure Ls and Q of a Bussed Q2b:

7.1 Use Agilent 4263B LCR Meter.
7.2 Turn power on by pushing line button. Wait 30 seconds until displayscreen is lit.
7.3 Recall program #1. To do this, push recall (Rcl) button, then push the #1 button, then push the Enter button.
7.4 Push Auto/Hold button to release hold.
7.5 Verify that the frequency displayed in the upper right corner of the display screen is 1000 Hz and the level recorded in the lower right corner of the display screen is 1V or 1000 mV.
7.6 Connect jumper between Q2a/Quadrant 3 inner power lead and 5KA bus as shown in figure.
7.7 Connect H_{cur} to 5KA bus as shown in figure.
7.8 Connect L_{cur} to Q2b/Quadrant 3 inner power lead as shown in figure.
7.9 Connect H_{pot} and L_{pot} buttons to voltage taps as shown below.
To measure Q2b:

- To measure Q1, connect H_{pot} to VTc1 (EE1512 for Q2b), and L_{pot} to VTd.
- To measure Q2, connect H_{pot} to VTe and L_{pot} to VTc1 (EE1512 for Q2b).
- To measure Q3, connect H_{pot} to VTd and L_{pot} to VTa1 (EE1412 for Q2b).
- To measure Q4, connect H_{pot} to VTb1 (EE1612 for Q2b) and L_{pot} to VTe.
- To measure total, connect H_{pot} to VTb1 (EE1612 for Q2b) and L_{pot} to VTa1 (EE1412 for Q2b).

7.10 Read Ls and Q from display and record in traveler.

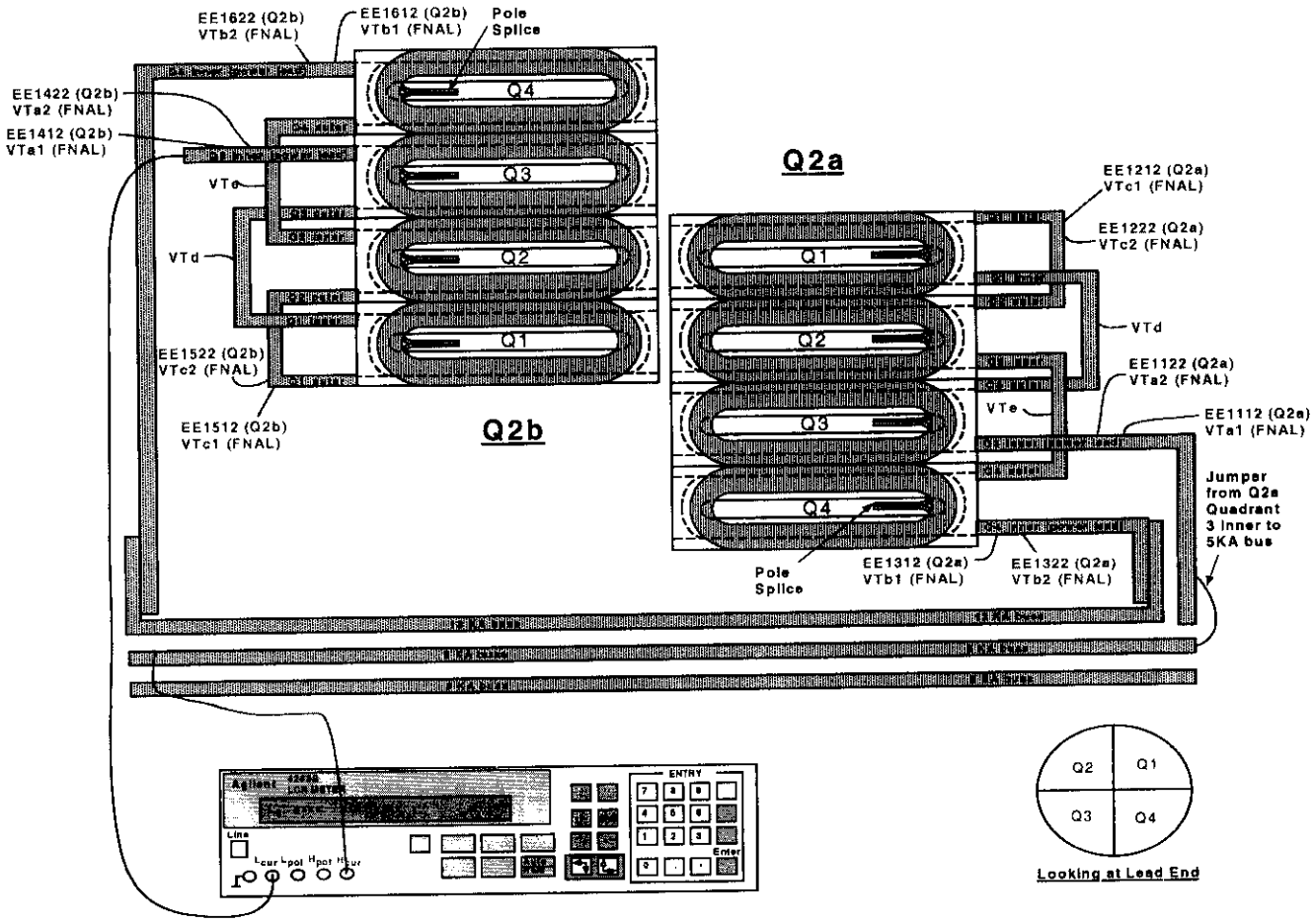

TABLE 7.0.1				
(Q2b) Inductance				Nominal ~ 3.34 to 3.48 mH
Voltage Tap Serial Numbers				Quadrant Total Inductance
Connect	Fermi	CERN	Quadrant	Fermi
H_{POT}	VTc1Q2b	EE1512	Quadrant 1	3.4301 mH
L_{POT}	VTdQ2b	EMPTY		
H_{POT}	VTeQ2b	EMPTY	Quadrant 2	3.4372 mH
L_{POT}	VTc1Q2b	EE1512		
H_{POT}	VTdQ2b	EMPTY	Quadrant 3	3.3785 mH
L_{POT}	VTa1Q2b	EE1412		
H_{POT}	VTb1Q2b	EE1612	Quadrant 4	3.4087 mH
L_{POT}	VTeQ2b	EMPTY		

TABLE 7.0.2				
				13.28 to 13.78 mH
				Fermi
H_{Pot}		EE1612	Total Cold Mass	13.652 mH
L_{Pot}	VTa1Q2b	EE1412		

Technician(s)

9.9.04
Date

TABLE 7.0.3				
(Q2b) Q-Factor				Nominal ~ 3.7 – 4.0
Voltage Tap Serial Numbers				Quadrant Total Q
Connect	Fermi	CERN	Quadrant	Fermi
[redacted]				
H_{POT}	VTc1Q2b	EE1512	Quadrant 1	3.8
L_{POT}	VTdq2b	EMPTY		
H_{POT}	VTeQ2b	EMPTY	Quadrant 2	3.8
L_{POT}	VTc1Q2b	EE1512		
H_{POT}	VTdQ2b	EMPTY	Quadrant 3	3.8
L_{POT}	VTa1Q2b	EE1412		
H_{POT}	VTb1Q2b	EE1612	Quadrant 4	3.8
L_{POT}	VTeQ2b	EMPTY		

TABLE 7.0.4				
[redacted]				Nominal ~ 3.7 to 4.0
				Fermi
H_{POT}	VTb1Q2b	EE1612	Total Cold Mass	3.8
L_{POT}	VTa1Q2b	EE1412		

Technician(s)

9.8.04
Date

8.0 Final Thermometer and Heater Electrical Inspection

To measure the resistance of a Thermometer (RTD):
Use Hewlett Packard HP3457A digital multimeter.

8.1 Record temperature of building within +/- 5 degrees.
8.2 Press line button to turn line on.
8.3 Connect wires as shown in Figure below.
U+ (Black) to Sense HI
I+ (Yellow) to Input HI
U- (Red) to Sense LO
I- (Green) to Input LO
8.4 Push blue button (function key) once.
8.5 Push OHMF button.
8.6 Verify arrow in readout is above the 4W□ (meaning a 4 wire resistance measurement).
8.7 Read resistance in ohms and record in traveler.

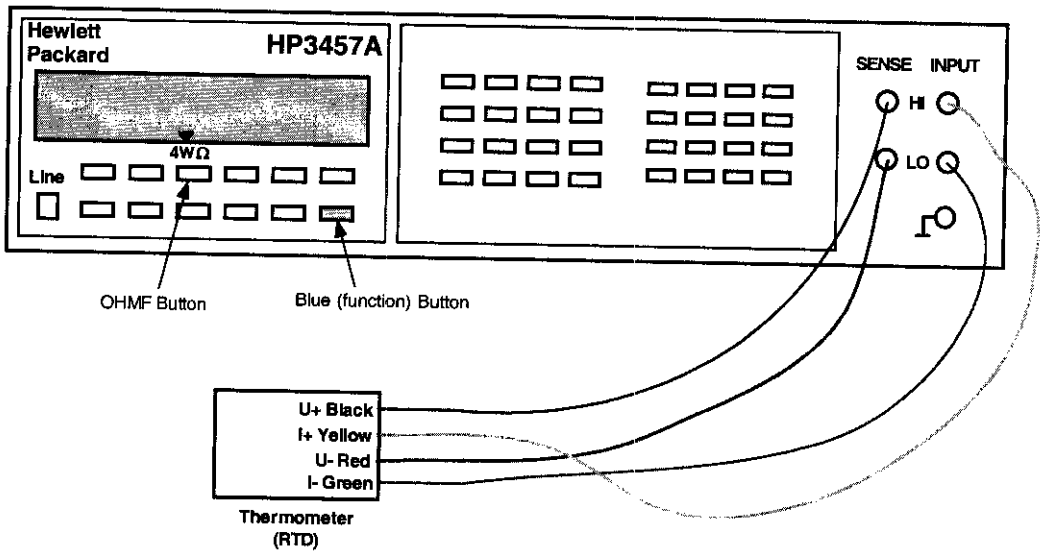

To measure the resistance of a Cryogenic (Warm-up) Heater

8.8 Use Hewlett Packard HP3457A digital multimeter.
8.9 Record temperature of building within +/- 5 degrees.
8.10 Press line button to turn line on.
8.11 Connect wires as shown in Figure below.
8.12 Push blue button (function key) once.
8.13 Push OHMF button.
8.14 Verify arrow in readout is above the 4W□ (meaning a 4 wire resistance measurement). Note: Although this is technically a 4 wire measurement, it is effectively a 2 wire measurement, since there are only 2 wires connected to each heater.
8.15 Read resistance in ohms and record in traveler.

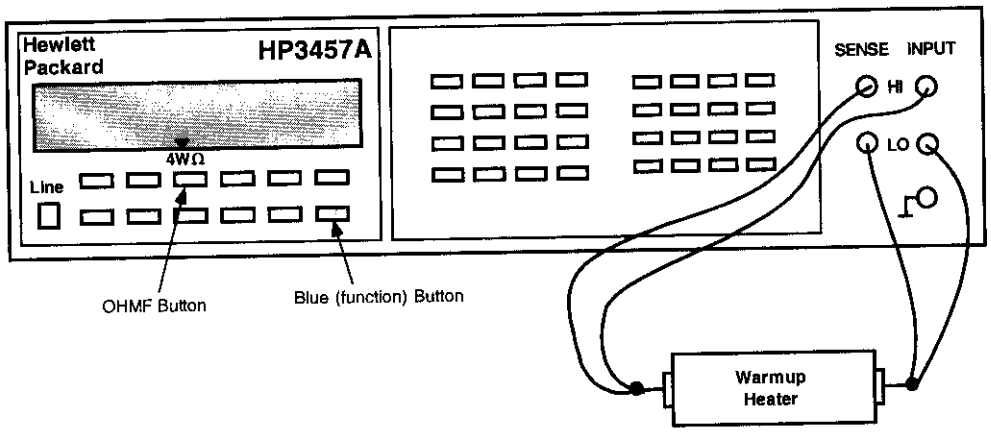

Table 8.0.1

Q2a – RTD's and Cryogenic (warm-up) Heaters

Temperature of Building (+/-5°):	[redacted]		Fermi F°/C°	
Component	Fermi	CERN	Resistance	Resistance to Ground
Q2A RTD, Primary Serial # Original Resistance: Ω	TaQ2a	TT8312	Ω	MΩ >20 MOhms
Q2a RTD, redundant Serial # Original Resistance: Ω	TbQ2a	TT8322	Ω	MΩ >20 MOhms
Q2A Cryogenic (warm-up) Heater (LE) – wire toward cold mass end plate (CERN #11+)	W1aQ2A	EH8312+	18.9 Ω	MΩ >20 MOhms
Q2A Cryogenic (warm-up) Heater (LE) – wire toward cold mass mag center (CERN #11-)	W2aQ2A	EH8312-		
Q2A Cryogenic (warm-up) Heater (Non-LE) – wire toward cold mass end plate (CERN #21+)	W1bQ2A	EH8322+	17.819 Ω	MΩ >20 MOhms
Q2A Cryogenic (warm up) Heater (Non-LE) – wire toward cold mass mag center (CERN #21-)	W2bQ2A	EH8322-		

63.184
67.396

Technician(s)

9.8.04
Date

LHC Q2 LQXB Shipping Traveler

LHC Serial No. LQXB04

Notes: ___

Table 8.0.2				
Q2b – RTD's and Cryogenic (warm-up) Heaters				
Temperature of Building (+/-5°): 72	[redacted]		Fermi	
			F°/C°	
Component	Fermi	CERN	Resistance	Resistance to Ground
Q2b RTD, Primary Serial # Original Resistance: Ω	TaQ2b	TT8332	105.726 Ω	MΩ >20 MOhms
Q2b RTD, redundant Serial # Original Resistance: Ω	TbQ2b	TT8342	105.318 Ω	MΩ >20 MOhms
Q2B Cryogenic (warm-up) Heater (LE) – wire toward cold mass end plate (CERN #11+)	W1aQ2b	EH8332+	17.410 Ω	MΩ >20 MOhms
Q2B Cryogenic (warm-up) Heater (LE) – wire toward cold mass mag center (CERN #11-)	W2aQ2b	EH8332-		
Q2B Cryogenic (warm-up) Heater (Non-LE) – wire toward cold mass end plate (CERN #21+)	W1bQ2b	EH8342+	17.726 Ω	MΩ >20 MOhms
Q2B Cryogenic (warm up) Heater (Non-LE) – wire toward cold mass mag center (CERN #21-)	W2bQ2b	EH8342-		

Using the Hewlett Packard HP3457A digital multimeter, measure the Strip Heater Resistance for Q2a and Q2b.

TABLE 8.0.3				
Q2a Strip Heater Resistance				
Fermi	CERN	Description	Limit	Fermi Resistance
H1aQ2a	YT1112+	Circuit A	18.20 to 21Ω	19.130 Ω
H2aQ2a	YT1112-			
H1bQ2a	YT1122+	Circuit B	18.20 to 21Ω	19.298 Ω
H2bQ2a	YT1122-			

TABLE 8.0.4				
Q2b Strip Heater Resistance				
Fermi	CERN	Description	Limit	Fermi Resistance
H1aQ2b	YT1132+	Circuit A	18.20 to 21Ω	18.395 Ω
H2aQ2b	YT1132-			
H1bQ2b	YT1142+	Circuit B	18.20 to 21Ω	19.413 Ω
H2bQ2b	YT1142-			

Technician(s)

Date

LHC Q2 LQXB Shipping Traveler

LHC Serial No. LQXB04

Notes: ___

9.0 Final Power Lead Electrical Inspection

9.1 Using the HP3457A, connect power thru the connector Power Leads (HA2 and HB2 to measure Q2-H2 or VA2 and VB2 to measure Q2-V2).

Connect the Sense Leads as shown in table below and record resistance.

(Magnet Bus Leads)

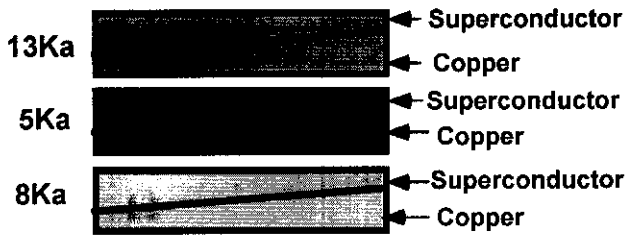

(Corrector Bus Leads)

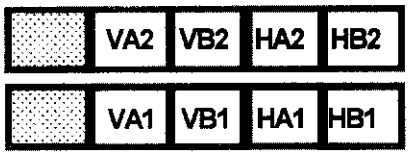

(View Looking into Q2b)

TABLE 9.0.1			
MCBX Corrector Coil Taps			
Component	Fermilab Label	CERN Label	Fermi Resistance Nominal 0.040 Ω
Q2-H2	VTH2	EE8122	.040 Ω
	HA2	N/A	
Q2-V2	VTV2	EE8112	.040 Ω
	VA2	N/A	

Technician(s) 9-2-04 Date

XXX 9.2 Hipot according to table below. Hipot to 1500V. Ramp Rate XXV/second. Dwell Time 30 seconds. Maximum leakage is 3μA.

Hipot Heaters to Coil and Ground.

TABLE 9.0.2			
High Potential	Grounded	Floating	Fermi Leakage
All Strip Heaters	Coils, Yoke, Q1 Instrumentation Bus, Lead and Corrector Coil Busses, RTD's and Warm-up Heaters	Nothing	μA

Hipot Coil to Heaters and Ground.

TABLE 9.0.3			
High Potential	Grounded	Floating	Fermi Leakage
All Coils	Strip Heaters, Yoke, Q1 Instrumentation Bus, 8kA and 5kA Lead Busses and Corrector Coil Busses, RTD's and Warm-up Heaters	Nothing	μA

Technician(s) Date

Responsible Authority/Physicist Date

9.3 Check Q1 Instrumentation Bus Wires for Continuity.

TABLE 9.0.4

Module	Pin	Fermi	CERN	KEK	Description	Fermi Done
M2	1	VTa1Q1	EE1111	a1	Q1 Lead Voltage Tap "a", primary	✓
M2	2	VTa2Q1	EE1121	a2	Q1 Lead Voltage Tap "a", redundant	✓
M2	3	VTc1Q1	EE1211	c1	Q1 Center Voltage Tap "c", primary	✓
M2	4	VTc2Q1	EE1221	c2	Q1 Center Voltage Tap "c", redundant	✓
M2	5	VTb1Q1	EE1311	b1	Q1 Lead Voltage Tap "b", primary	✓
M3	5	VTb2Q1	EE1321	b2	Q1 Lead Voltage Tap "b", redundant	✓
M5	1	VTH1	EE8121		Corrector voltage tap Q1-H1 (skew dipole) (on MCBX, MCBXH, A+ lead)	✓
M5	2	VTV1	EE8111		Corrector voltage tap Q1-V1 (normal dipole) (on MCBX, MCBXV A+ lead)	✓
M7	1	W1aQ1	EH8311+		Q1 Cryogenic Heater lead end - wire at top (CERN #1 I+)	✓
M7	2	W2aQ1	EH8311-		Q1 Cryogenic Heater lead end - wire at bottom (CERN #1 I-)	✓
M7	3	W1bQ1	EH8321+		Q1 Cryogenic Heater non-lead end - wire at top (CERN #2 I+)	✓
M7	4	W2bQ1	EH8321-		Q1 Cryogenic Heater non-lead end - wire at bottom (CERN #2 I-)	✓
M9	1	H1aQ1	YT1111+	HA1	Q1 Protection (Strip) Heater, ("a" circuit) (CERN lead #1+)	✓
M9	3	H2aQ1	YT1111-	HA2	Q1Protection (Strip) Heater, ("a" circuit) (CERN lead #1-)	✓
M9	5	H1bQ1	YT1121+	HB1	Q1 Protection (Strip) Heater, ("b" circuit) (CERN lead #2+)	✓
M10	4	H2bQ1	YT1121-	HB2	Q1 Protection (Strip) Heater, ("b" circuit) (CERN lead #2-)	✓
M12	1	TaQ1_I+	TT8311 I+		Q1 RTD, primary Wire color: Yellow	✓
M12	2	TaQ1_I-	TT8311 I-		Q1 RTD, primary Wire color: Green	✓
M12	3	TaQ1_V+	TT8311 U+		Q1 RTD, primary Wire color: Black	✓
M12	4	TaQ1_V-	TT8311 U-		Q1 RTD, primary Wire color: Red	✓
M12	5	TbQ1_I+	TT8321 I+		Q1 RTD, primary Wire color: Yellow	✓
M12	6	TbQ1_I-	TT8321 I-		Q1 RTD, primary Wire color: Green	✓
M12	11	TbQ1_V+	TT8321 U+		Q1 RTD, primary Wire color: Black	✓
M12	10	TbQ1_V-	TT8321 U-		Q1 RTD, primary Wire color: Red	✓

Technician(s)

9-8-04
Date

10.0 Shipping the Magnet

10.1 Acquire the Shipping Frame Assembly (ME-390686).

10.2 Acquire the following shipping hardware:

Eyebolt	McMaster-Carr 3016T87	6 ea
Eyebolt	McMaster-Carr 3016T85	6 ea
Hex Nut	MA-393328	24 ea
Flat Washer	MA-393328	12 ea
Lock Washer	MA-393329	12 ea
Chain w/2 Hooks	MA-390702	6 ea
Mouting Bolts	MA-393321	9 ea
Flat Washer	MA-393323	9 ea
Lcok Washer	MA-393322	9 ea
Hoist Rings	McMaster-Carr (2994767)	10 ea

10.3 Remove the Hoist Rings (4 ea) from the Outer Frame as per ME-390710.

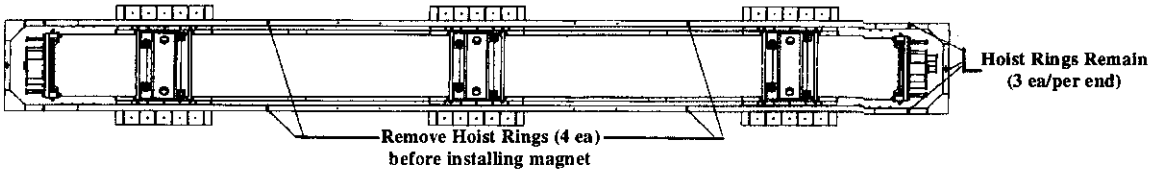

Technician(s) _____ Date 9/8/04

11.0 Magnet to Shipping Frame/Platform Installation

11-.1 Install Bellows End Sliding Flange Assembly (ME-390021) using Bolts XXX (XX ea)on both the Non-IP and IP Magnet Ends..

11.2 Transport the magnet to the Magnet Shipping Fixture and install using Bolt (MA-393321)(9 ea), Flat Washer (MA-393323)(9 ea), and Lock Washer (MA-393322)(9 ea).
Torque bolts to XX FT/LBS.

Note: Apply a small amount of Anti-Seize (MX-XXXXXX) to all the bolt threads prior to installing the bolt.

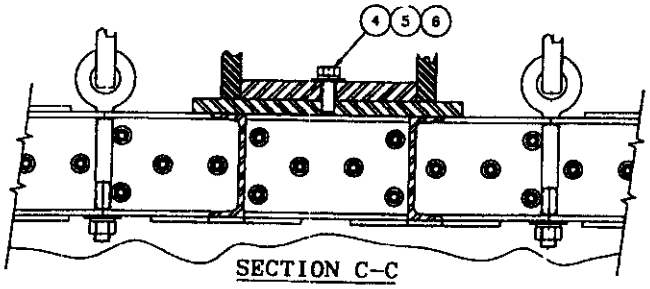

Q2 Shipping Assembly
ME-390710

11.3 Record Magnet Serial number below. Verify serial number matches the bottom of this traveler.

Magnet Serial Number	LQXB004-0

11.4 Install Eyebolts, McMaster-Carr #3016T85 (6 ea), Eyebolts, McMaster Carr #3016T87 (6 ea), Flat Washer (MA-393328)(12 ea), and Lock Washer (MA-393329)(12 ea) into Shipping Fixture.

Note: Install all Eyebolts #3016T85 on one side of the shipping fixture. Eyebolts #3016T87 go on the opposite side.

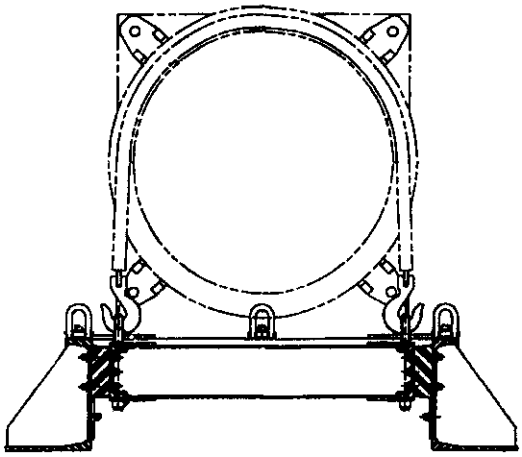

11.5 Install Lift All Pukka Wear Pad Protectors (MA-393345) onto magnet prior to installing Chain Sling.

Technician(s) _____ Date 8/20/04

11.6 Install chain sling w/2 hooks (MA-390702) (6 ea) into eyebolts

Technician(s) _____ Date 8/20/04

11.7 Tighten eyebolts until chains are snug.

Technician(s) _____ Date 8/20/04

11.8 Install an additional nut (double nutting) on each eyebolt and tighten.

Technician(s) _____ Date 8/20/04

12.0 Magnet End Preparation

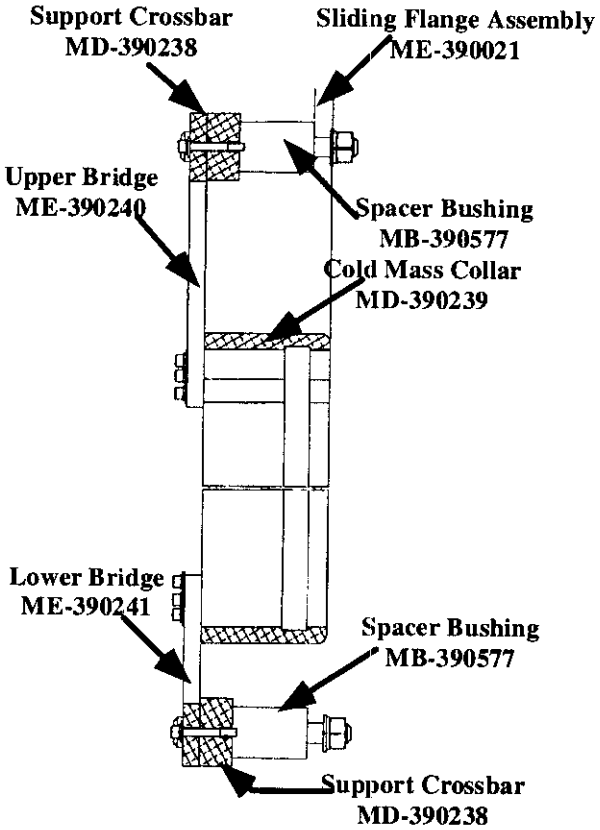

Shipping Restraint
ME-390249
Side View

12.1 Acquire Q2 Shipping Restraint Assembly (ME-390249)(2 ea)

Technician(s) _____ Date 9/15/04

12.2 Install the Shipping Restraint on the Non- IP Magnet end.

Note: Installation Shipping Restraint bolts should be only finger tight until complete assembly is installed.

12.2.1 Install Cold Mass Collar (MD-390239) and secure using Bolt (MA-393191) (6 ea), and Washer (MX-XXXXXX)(X ea).
12.2.2 Install Upper Support Cross Bar (MD-390238)(1 ea) with Spacer Bushing (MB-390577) (2 ea) using Bolt (MA-393183 (2 ea), LockWasher (MA-393186) (4 ea), Plain Washer (MA-393185) (4 ea), and Nut (MA-393184)(2 ea).
12.2.3 Install Lower Support Cross Bar (MD-390238)(1 ea) with Spacer Bushing (MB-390577) (2 ea) using Bolt (MA-393183 (2 ea), LockWasher (MA-393186) (4 ea), Plain Washer (MA-393185) (4 ea), and Nut (MA-393184)(2 ea).
12.2.4 Install the Upper Bridge (ME-390240) to the Upper Support Bar using Bolt (MA-393187) (7 ea), Lock Washer (MA-393061) (7ea), and Flat Washer (MA-393060) (7ea).
12.2.5 Install the Lower Bridge (ME-390241) to the Lower Support Bar using Bolt (MA-393187) (7 ea), Lock Washer (MA-393061) (7ea), and Flat Washer (MA-393060) (7ea).
12.2.6 Secure Upper Bridge to Cold Mass Collar with Bolt (MA-393191) (6 ea), Lock Washer (MA-393061) (6 ea), and Plain Washer (MA-393060) (6 ea).
12.2.7 Secure Upper Bridge to Cold Mass Collar with Bolt (MA-393191) (6 ea), Lock Washer (MA-393061) (6 ea), and Plain Washer (MA-393060) (6 ea).
12.2.8 Tighten all the Shipping Restraint Bolts.

Technician(s) _____ Date 9/15/04

12.3 Install the Shipping Restraint on the IP Magnet end.

Note: Installation Shipping Restraint bolts should be only finger tight until complete assembly is installed.

12.3.1 Install Cold Mass Collar (MD-390239) and secure using Bolt (MA-393191) (6 ea), and Washer (MX-XXXXXX)(X ea).
12.3.2 Install Upper Support Cross Bar (MD-390238)(1 ea) with Spacer Bushing (MB-390577) (2 ea) using Bolt (MA-393183 (2 ea), LockWasher (MA-393186) (4 ea), Plain Washer (MA-393185) (4 ea), and Nut (MA-393184)(2 ea).
12.3.3 Install Lower Support Cross Bar (MD-390238)(1 ea) with Spacer Bushing (MB-390577) (2 ea) using Bolt (MA-393183 (2 ea), LockWasher (MA-393186) (4 ea), Plain Washer (MA-393185) (4 ea), and Nut (MA-393184)(2 ea).
12.3.4 Install the Upper Bridge (ME-390240) to the Upper Support Bar using Bolt (MA-393187) (7 ea), Lock Washer (MA-393061) (7ea), and Flat Washer (MA-393060) (7ea).
12.3.5 Install the Lower Bridge (ME-390241) to the Lower Support Bar using Bolt (MA-393187) (7 ea), Lock Washer (MA-393061) (7ea), and Flat Washer (MA-393060) (7ea).
12.3.6 Secure Upper Bridge to Cold Mass Collar with Bolt (MA-393191) (6 ea), Lock Washer (MA-393061) (6 ea), and Plain Washer (MA-393060) (6 ea).
12.3.7 Secure Upper Bridge to Cold Mass Collar with Bolt (MA-393191) (6 ea), Lock Washer (MA-393061) (6 ea), and Plain Washer (MA-393060) (6 ea).
12.3.8 Tighten all the Shipping Restraint Bolts.

Technician(s) _____ Date 9/15/04

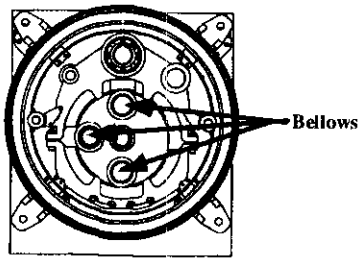

Q2 Magnet Non-IP End

12.4 Install Electrical Bus Shipping Restraint Short End Cover (MD-390752) into Lower Cold Mass Pipe to protect the Buss Wire.

12.5 Install Protective End onto PVC Bus Protector Tube.

12.6 Secure bellows with Bellow Restraint/Protective Cover (MX-XXXXXX).

Technician(s) _____ Date 9/17/04

12.7 Insulate the magnet leads using Kapton Tape MA-106723 ½ lapped.

12.8 Insulate the magnet leads using ¾" Black Shrink Tubing (MA-318797). Ensure that the entire length of magnet leads are covered before heat shrinking.

Technician(s) _____ Date 9/17/04

12.9 Install Electrical Bus Shipping Restraint Assy (MD-390748).

Note: Magnet wires must be inserted into the Shipping Restraint Assy during installation.

Note: Shipping Restraint Assy is to be dry fit assembled, NOT GLUED!!!

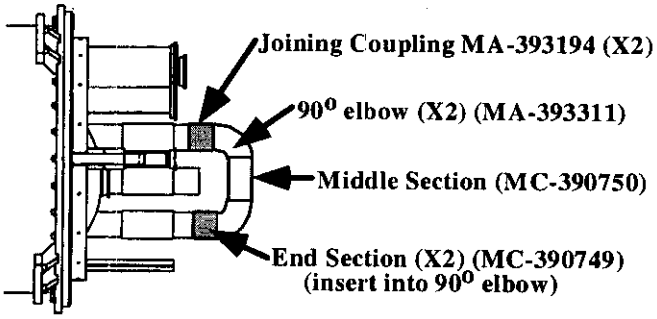

IP Magnet End
Side View

Technician(s) _____ Date 9/17/04

12.10 Install Protective Covers on flanges.

Technician(s) _____ Date 9/15/04

12.11 Install Acceleratoromators as per MX-XXXXXX.

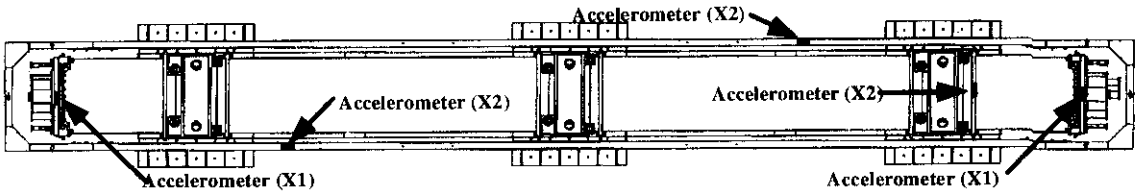

Technician(s) _____ Date 9/15/04

12.12 Install Magnet Identification Labels as per ME-390760.

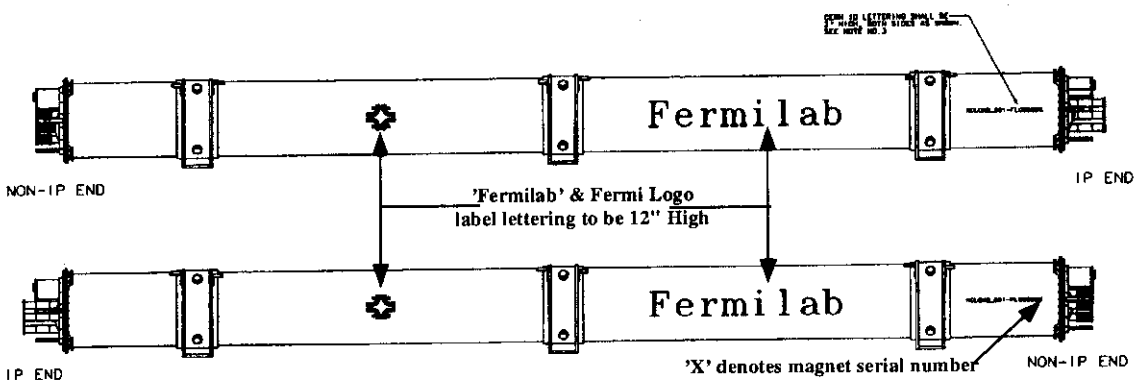

Technician(s) _____ Date 9/15/04

13.0 Final Inspection/Installation

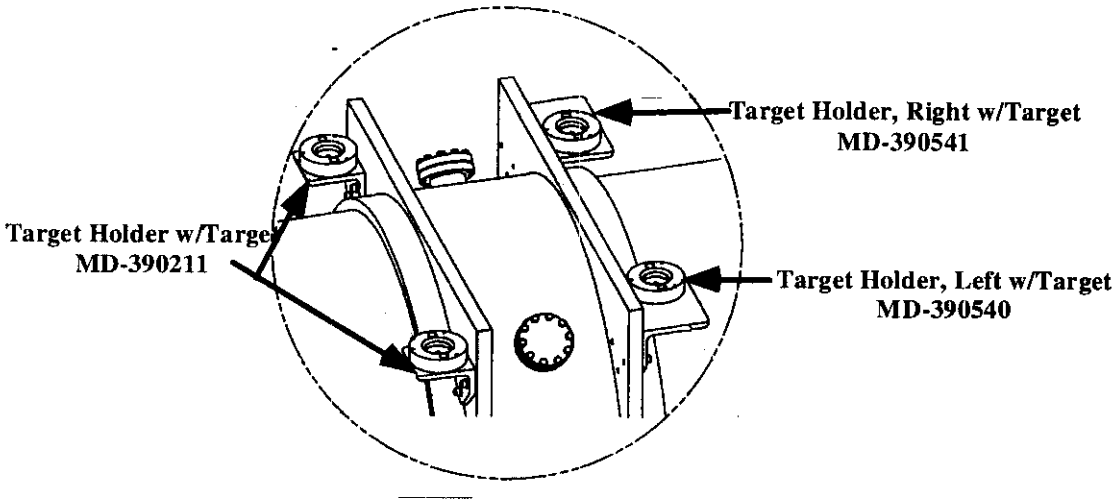

X 13.1 Verify Target Holder (MD-390211)(6 ea), Target Holder, Right (MD-390541)(3 ea), and Target Holder, Left (MD-390540)(3 ea) with Reference Cup (MA-390426)(12 ea) and Protective Cover (MX-XXXXXX) are installed.

Lead Person _____ Date 9/17/04

X 13.2 Verify that the Target Holder had been pinned using Roll Pins (MX-XXXXXX) as per Dwg MX-XXXXXX.

Lead Person _____ Date 9/17/04

13.3 Verify Magnet has been properly labeled/stenciled as per ME-390760.

Lead Person _____ Date 9/17/04

14.0 Documentation Update

14.1 Perform the following:

Update DSR Keywords ✓
Location ✓
Location Verified Date ✓
Status ✓
Make entry regarding work performed. ✓

TD/E&F Production Supervisor/designee — Date 9/21/04

15.0 Production Complete

15.1 Process Engineering verify that the Traveler is accurate and complete. This shall include a review of all steps to ensure that all operations have been completed and signed off. Ensure that all Discrepancy Reports, Nonconformance Reports, Repair/Rework Forms, Deviation Index and dispositions have been reviewed by the Responsible Authority for conformance before being approved.

Comments:

Process Engineering/Designee — Date 12/10/04

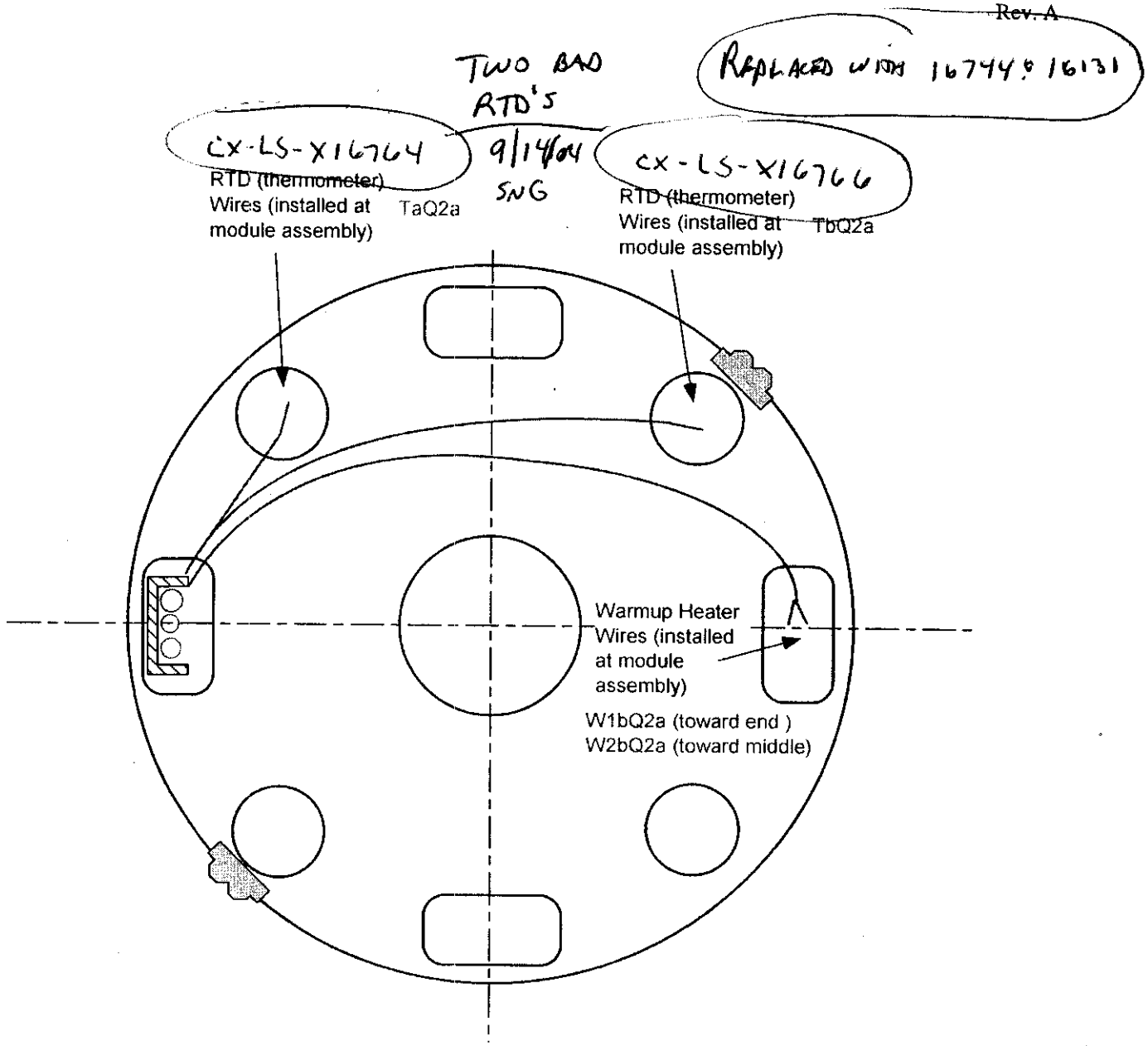

Looking at Non-lead End of Q2a

Figure 7.27-C

XXX 14.3 Check installation of Hypertronics. Ensure Hypertronics were installed as per Q2 Module Assembly (ME-369895) and Hypertronics Connector Assembly Procedure ES-XXXXXX.

Technician(s) — Date: 12/15/03

Responsible Authority/Physicist — Date: 12/15/03

NOTE: 2 NEW RTD'S WERE INSTALLED ON CORRECTOR COILS SKIN. FACING THE IP END FROM THE NON-IP END, RTD # CX_LS_X16131 IS ON THE LEFT AND RTD # CX_LS_X16744 IS ON THE RIGHT.

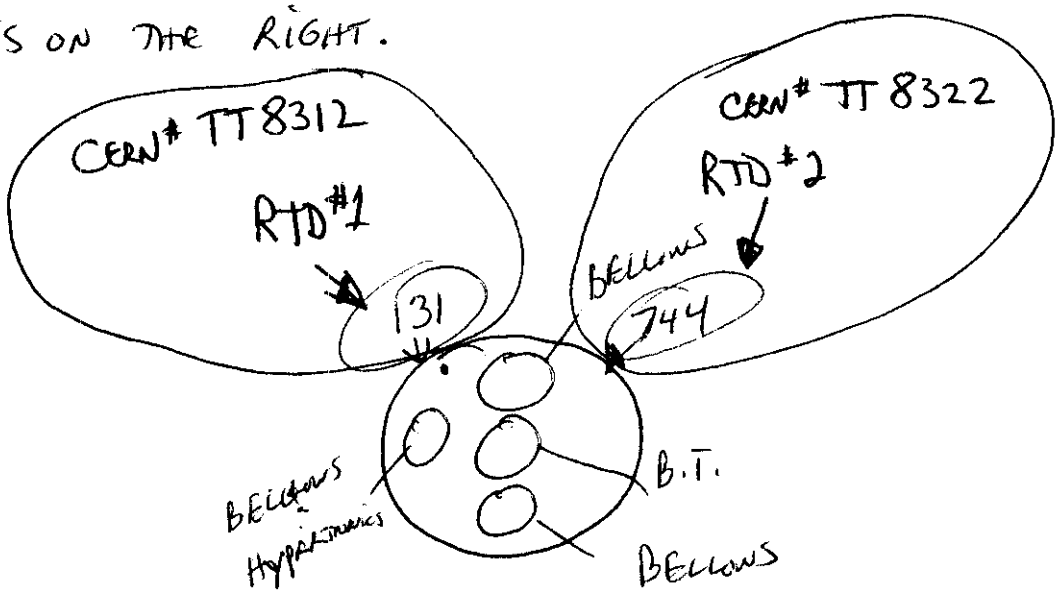

S. GOULD
12/17/03

Cryogenic Thermometer Traveller

DESCRIPTION

Part description:	Cryogenic thermometer	**Top Assembly Identification:**	LMQXB04
Part Identification:	HCQITESCXT-CR012240		
Serial Number:	CX_LS_X16744	**Manufactured By:**	Fermilab

CABLING

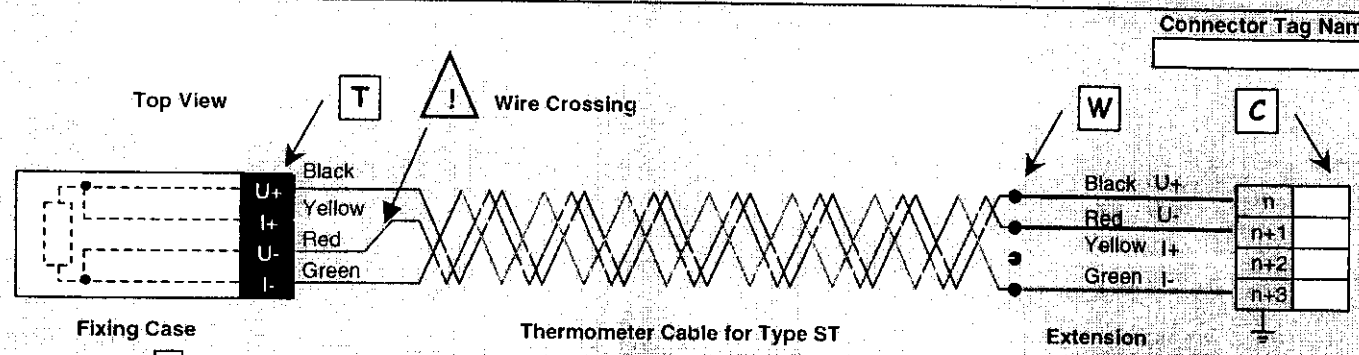

Fixing Case

Thread ☐
Hole ☐
Stud ☐

Thermometer Cable for Type ST

ρ (300 K) = 0.32 Ohm/m
Copper AWG 30
Length = ☐ m

Extension

ρ (300 K) = 0.07 Ohm/m
Copper AWG 24
Length: 0.8 m

CHECKS

Intervention	Date/ DD-MMM-YYYY	Check Point	R(U+,U-,I+,I-) [Ohm] 4W	R(U-,I-) [Ohm] 2W	R(U+,I+) [Ohm] 2W	R(U+,GND) [Ohm] 2W	Temperature [K]	Firm/Laboratory	Checked by
Calibration	*21-Jan-2002*	T	*67.06*	*n.a*	*n.a*	*OVL*	*Ambient*	*IPN*	*Joly*
Expedition	*12-Mar-2003*	T	*65.616*	*0.1*	*0.1*	*OVL*	*293*	*CERN*	*Grivat*
Reception		T W C	67.818					S.Gouch	12/17/03
		T W C							
		T W C							
		T W C							
		T W C							
		T W C							
		T W C							
		T W C							
		T W C							
		T W C							
		T W C							
		T W C							
		T W C							
		T W C							
		T W C							
		T W C							
		T W C							
		T W C							
		T W C							
		T W C							
		T W C							
		T W C							
		T W C							
		T W C							

Cryogenic Thermometer Traveller

DESCRIPTION

Part description:	Cryogenic thermometer	**Top Assembly Identification:**	LMQXB04
Part Identification:	HCQITESCXT-CR010500	**Manufactured By:**	Fermilab
Serial Number:	CX_LS_X16131		

CABLING

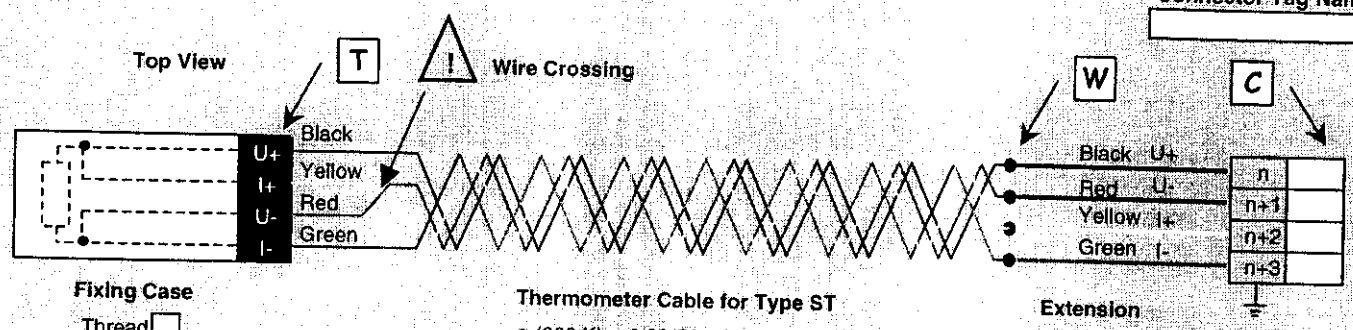

Fixing Case

Thread ☐
Hole ☐
Stud ☐

Thermometer Cable for Type ST

ρ (300 K) = 0.32 Ohm/m
Copper AWG 30
Length = ☐ m

Extension

ρ (300 K) = 0.07 Ohm/m
Copper AWG 24
Length: 0.8 m

CHECKS

Intervention	Date/ DD-MMM-YYYY	Check Point	R(U+,U-,I+,I-) [Ohm] 4W	R(U-,I-) [Ohm] 2W	R(U+,I+) [Ohm] 2W	R(U+,GND) [Ohm] 2W	Temperature [K]	Firm/Laboratory	Checked by
Calibration	21-Jan-2002	T	68.38	n.a	n.a	OVL	Ambient	IPN	Joly
Expedition	12-Mar-2003	T	66.578	0.1	0.1	OVL	293	CERN	Grivat
Reception		T W C	68.689					S.Gould	12/17/03
		T W C							
		T W C							
		T W C							
		T W C							
		T W C							
		T W C							
		T W C							
		T W C							
		T W C							
		T W C							
		T W C							
		T W C							
		T W C							
		T W C							
		T W C							
		T W C							
		T W C							
		T W C							
		T W C							
		T W C							
		T W C							
		T W C							
		T W C							

In Case of problem, do not hesitate to contact Responsible person at CERN, Tel.: 41-22-767-4...

Traveler Title: LHC Q2 LQXB Cryostat Shipping Traveler

Specification No: 5520-TR-333732

Revision: A

DR No: HGQ-0495

Step No: 8.0

Drawing No: 390710

Routing Form No:

Serial No: LQXB04

Rework ID: 0

Discrepancy Description:

During the final electrical for this magnet, RTD's TT8312 and TT8322 did not get a good number. As per Mike Lamm, two extra RTD's were added on the corrector magnet during the Module Assembly stage of this magnet assembly. They were then soldered into the hypertronics connector as per Mike Lamm's instructions. The paperwork for these RTD's are in the Module Assembly and Shipping Travelers.

SCANNED
DEC 10 2004

Originator: Steve Gould

Date: 9/14/2004

Cause of Nonconformance:

Replacement thermometers were not re-wired before sending to MTF.
(RTD's were wired into the hypertronics connector using the shipping traveler TR-333732 Bob Jensen 12/10/04)

Responsible Authority: Rodger Bossert

Date: 12/2/2004

Disposition:

(Re-issued Hypertonics Installation (Step 14.0) of Q2 Module Assembly (TR-333643) per production request on 9/15/04 - John Szostak)
(Re-issued TR-333732 on 9/15/04 to perform an electrical inspection after installation of RTD's Bob Jensen 9/15/04).

Responsible Authority: Rodger Bossert

Date: 12/2/2004

Corrective Action to Prevent Recurrence:

No corrective action necessary. This situation is not likely to recurr. No Traveler Change.

Responsible Authority: Rodger Bossert

Date: 12/2/2004

Corrective Action/Disposition Verified By: Bob Jensen

Date: 12/10/2004

Will Configuration be affected?: ☐ YES ☑ NO

Identified problem area:

☑ Material ☐ Manpower ☐ Method ☐ Machine ☐ Measurement

Reviewed By: Bob Jensen

Date: 12/10/2004

5.0 Final Resistance Electrical Inspection

5.1 Perform an electrical inspection on each of the Individual Quadrants and the Cold Masses. Refer to the Valhalla and Leader Free Standing Coil Measurement Procedure (ES292306).

To measure the resistance of a bussed Q2:

1. Use Valhalla Scientific 4300B digital micro-ohmmeter.
2. Set Test Current to 1 amp.
3. Set Scale to 2V full scale.
4. Turn temperature compensation on.
5. Turn test current off.
6. Put jumper between Q2a Quadrant #3 inner power lead and 5 KA bus as shown in figure.
7. Connect I_{HI} to the 5KA bus (Q2a Quadrant #3 inner power lead) as shown in figure.
8. Connect I_{LO} to the Q2b Quadrant #3 inner power lead as shown in figure.
9. Turn test current on.
10. Connect V_{HI} and V_{LO} buttons to voltage taps as shown below.
11. Read resistance and record in traveler.

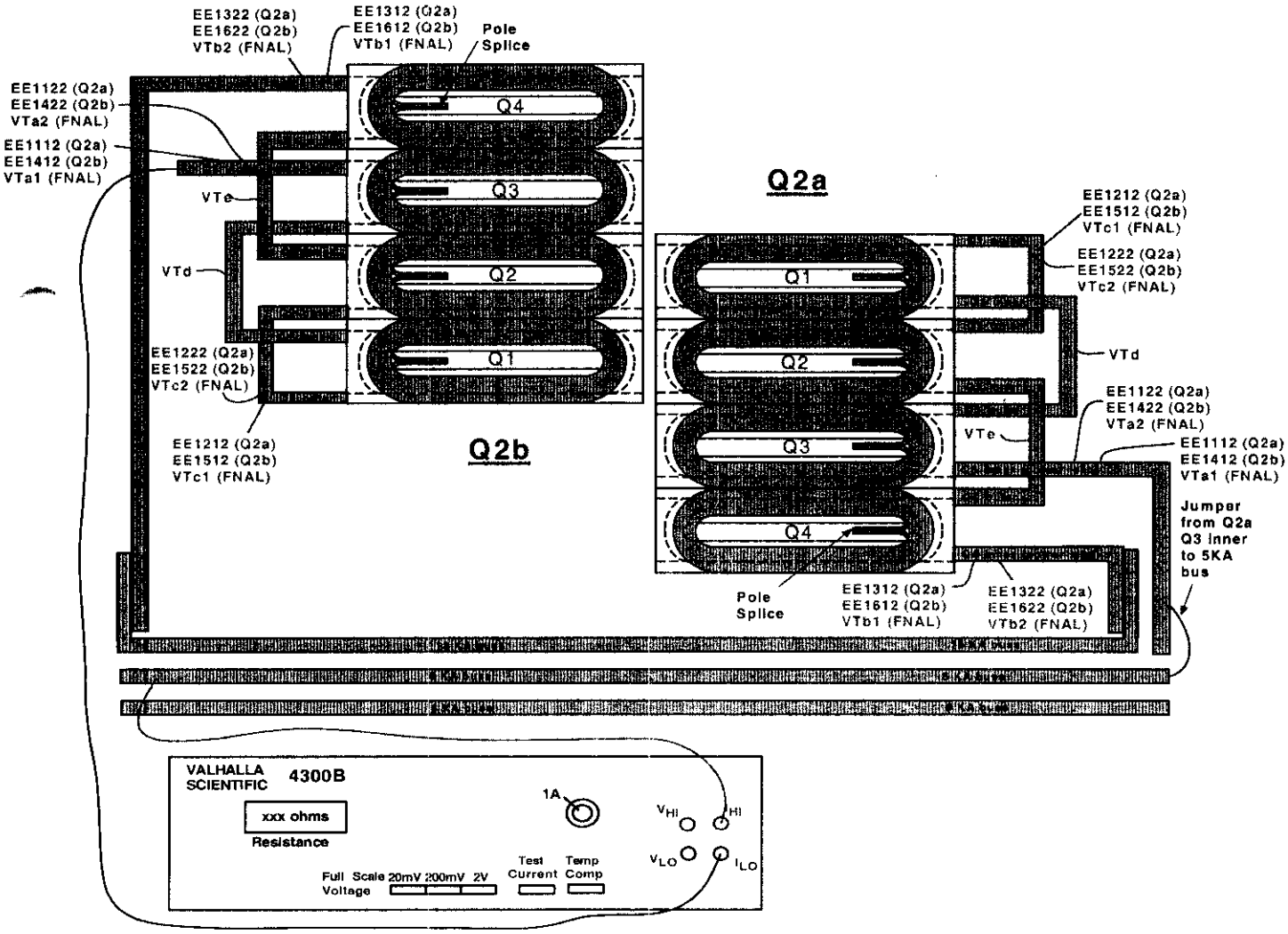

Note: Sign of resistance reading should always be positive. If negative readings notify production supervisor.

TABLE 5.0.1				
(Q2a) Resistance				Nominal ~ 560 to 585 mΩ
Voltage Tap Serial Numbers				Quadrant Total Resistance
Connect	Fermi	CERN	Quadrant	Fermi
V_{HI}	VTdQ2a	EMPTY	Quadrant 1	577.3 mΩ
V_{LO}	VTc1Q2a	EE1212		
V_{HI}	VTc1Q2a	EE1212	Quadrant 2	577.1 mΩ
V_{LO}	VTeQ2a	EMPTY		
V_{HI}	VTa1Q2a	EE1112	Quadrant 3	576.9 mΩ
V_{LO}	VTdQ2a	EMPTY		
V_{HI}	VTeQ2a	EMPTY	Quadrant 4	577.0 mΩ
V_{LO}	VTb1Q2a	EE1312		

Note: Sign of resistance reading should always be positive. If negative readings notify production supervisor.

TABLE 5.0.2				
				Fermi
V_{HI}	VTa1Q2a	EE1112	Quadrant #3 & #1	1153.8 mΩ
V_{LO}	VTc1Q2a	EE1212		Nominal ~ 1120 mΩ
V_{HI}	VTc1Q2a	EE1212	Quadrant #2 & #4	1153.8 mΩ
V_{LO}	VTb1Q2a	EE1312		Nominal ~ 1120 mΩ
V_{HI}	VTa1Q2a	EE1112	Total Cold Mass	2.309 mΩ
V_{LO}	VTb1Q2a	EE1312		Nomimal ~ 2.305 Ω

Technician(s) _____ Date 9/15/04

Check resistance of Redundant Voltage Taps.

TABLE 5.0.3			
Q2a Redundant Voltage Taps Resistance			
			Fermi
Connect	Fermi	CERN	Nominal ~1120 mΩ
V_{HI}	VTa2Q2a	EE1122	1153.3 mΩ
V_{LO}	VTc2Q2a	EE1222	
V_{HI}	VTc2Q2a	EE1222	1153.3 mΩ
V_{LO}	VTb2Q2a	EE1322	

Technician(s) _____ Date 9/15/04

TABLE 5.0.4				
(Q2b) Resistance				Nominal ~ 560 to 585 mΩ
Voltage Tap Serial Numbers				Quadrant Total Resistance
Connect	Fermi	CERN	Quadrant	Fermi
V_{HI}	VTc1Q2b	EE1512	Quadrant 1	576.5 mΩ
V_{LO}	VTdQ2b	EMPTY		
V_{HI}	VTeQ2b	EMPTY	Quadrant 2	576.7 mΩ
V_{LO}	VTc1Q2b	EE1512		
V_{HI}	VTdQ2b	EMPTY	Quadrant 3	576.5 mΩ
V_{LO}	VTa1Q2b	EE1412		
V_{HI}	VTb1Q2b	EE1612	Quadrant 4	576.3 mΩ
V_{LO}	VTeQ2b	EMPTY		

TABLE 5.0.5				
				Fermi
V_{HI}	VTc1Q2b	EE1512	Quadrant #1 & #3	1152.9
V_{LO}	VTa1Q2b	EE1412		Nominal ~ 1120 m Ω
V_{HI}	VTb1Q2b	EE1612	Quadrant #4 & #2	1152.8
V_{LO}	VTc1Q2b	EE1512		Nominal ~ 1120 m Ω
V_{HI}	VTb1Q2b	EE1612	Total Cold Mass	2.307
V_{LO}	VTa1Q2b	EE1412		Nominal ~ 2.305 Ω

Technician(s) 9/15/04 Date

Check the resistance of the Redundant Voltage Taps.

TABLE 5.0.6			
Q2b Redundant Voltage Taps			
			Resistance
Connect	**Fermi**	**CERN**	**Fermi**
V_{HI}	VTc2Q2b	EE1522	1153.Ø Ω
V_{LO}	VTa2Q2b	EE1422	
V_{HI}	VTb2Q2b	EE1622	1153.Ø Ω
V_{LO}	VTc2Q2b	EE1522	

Technician(s) 9/15/04 Date

6.0 Q2A Final Inductance and Q Electrical Inspection

To measure Ls and Q of a Bussed Q2a:

6.1 Use Agilent 4263B LCR Meter.
6.2 Turn power on by pushing line button. Wait 30 seconds until display screen is lit.
6.3 Recall program #1. To do this, push recall (Rcl) button, then push the #1 button, then push the Enter button.
6.4 Push Auto/Hold button to release hold.
6.5 Verify that the frequency displayed in the upper right corner of the display screen is 1000 Hz and the level recorded in the lower right corner of the display screen is 1V or 1000 mV.
6.6 Connect jumper between Q2a/Quadrant 3 inner power lead and 5KA bus as shown in figure.
6.7 Connect H_{cur} to Q2b/Quadrant 3 inner power lead as shown in figure.
6.8 Connect L_{cur} to 5KA bus as shown in figure.
6.9 Connect H_{pot} and L_{pot} buttons to voltage taps as shown below.

To measure Q2a:

- To measure Q1, connect H_{pot} to VTc1 (EE1212 for Q2a), and L_{pot} to VTd.
- To measure Q2, connect H_{pot} to VTe, and L_{pot} to VTc1 (EE1212 for Q2a).
- To measure Q3, connect H_{pot} to VTd and L_{pot} to VTa1 (EE1112 for Q2a).
- To measure Q4, connect H_{pot} to VTb1 (EE1312 for Q2a), and L_{pot} to VTe.
- To measure total, connect H_{pot} to VTb1 (EE1312 for Q2a),and L_{pot} to VTa1 (EE1112 for Q2a).

6.10 Read Ls and Q from display and record in traveler.

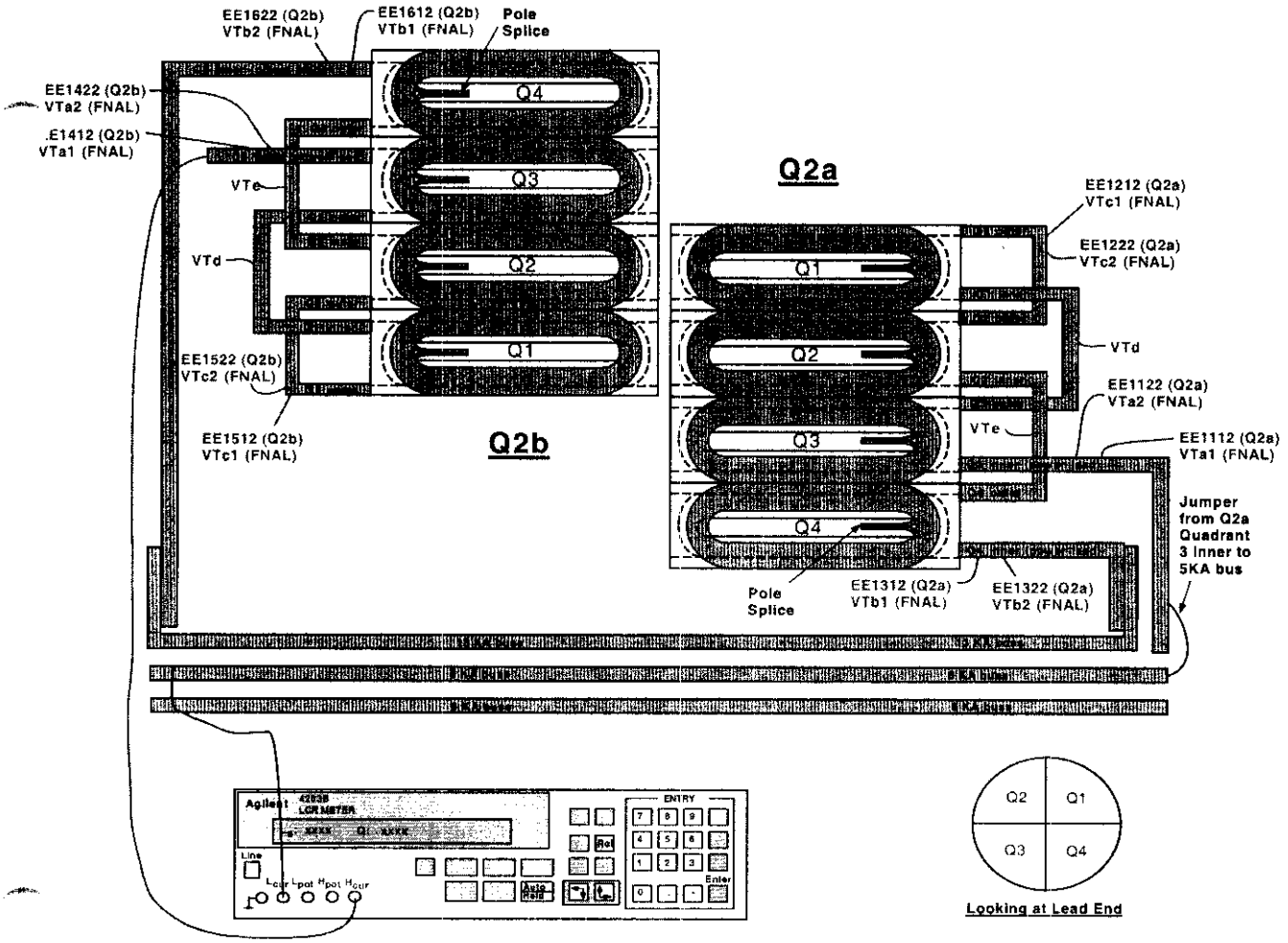

Note: All Inductance readings are taken at 1KHz.

TABLE 6.0.1				
(Q2a) Inductance				Nominal ~ 3.34 to 3.48 mH
Voltage Tap Serial Numbers				Quadrant Total Inductance
Connect	Fermi	CERN	Quadrant	Fermi
LPOT	VTdQ2a	EMPTY	Quadrant 1	3.4378 mH
HPOT	VTc1Q2a	EE1212		
LPOT	VTc1Q2a	EE1212	Quadrant 2	3.4311 mH
HPOT	VTeQ2a	EMPTY		
LPOT	VTa1Q2a	EE1112	Quadrant 3	3.3817 mH
HPOT	VTdQ2a	EMPTY		
LPOT	VTeQ2a	EMPTY	Quadrant 4	3.4171 mH
HPOT	VTb1Q2a	EE1312		

TABLE 6.0.2				
				Nominal ~ 13.28 to 13.78 mH
				Fermi
LPOT	VTa1Q2a	EE1112	Total Cold Mass	13.664 mH
HPOT	VTb1Q2a	EE1312		

TABLE 6.0.3				
(Q2a) Q-Factor				Nominal ~ 3.7 – 4.0
Voltage Tap Serial Numbers				Quadrant Total Q
Connect	Fermi	CERN	Quadrant	Fermi
LPOT	VTdQ2a	EMPTY	Quadrant 1	3.8
HPOT	VTc1Q2a	EE1212		
LPOT	VTc1Q2a	EE1212	Quadrant 2	3.8
HPOT	VTeQ2a	EMPTY		
LPOT	VTa1Q2a	EE1112	Quadrant 3	3.8
HPOT	VTdQ2a	EMPTY		
LPOT	VTeQ2a	EMPTY	Quadrant 4	3.8
HPOT	VTb1A2a	EE1312		

Technician(s) _____ Date 9/15/04

TABLE 6.0.4				
				Nominal ~ 3.7 – 4.0
				Fermi
LPOT	VTa1Q2a	EE1112	Total Cold Mass	~~13.664~~ 3.8
HPOT	VTb1Q2a	EE1312		

7.0 Q2B Final Inductance and Q Electrical Inspection

To measure Ls and Q of a Bussed Q2b:

7.1 Use Agilent 4263B LCR Meter.
7.2 Turn power on by pushing line button. Wait 30 seconds until displayscreen is lit.
7.3 Recall program #1. To do this, push recall (Rcl) button, then push the #1 button, then push the Enter button.
7.4 Push Auto/Hold button to release hold.
7.5 Verify that the frequency displayed in the upper right corner of the display screen is 1000 Hz and the level recorded in the lower right corner of the display screen is 1V or 1000 mV.
7.6 Connect jumper between Q2a/Quadrant 3 inner power lead and 5KA bus as shown in figure.
7.7 Connect H_{cur} to 5KA bus as shown in figure.
7.8 Connect L_{cur} to Q2b/Quadrant 3 inner power lead as shown in figure.
7.9 Connect H_{pot} and L_{pot} buttons to voltage taps as shown below.
To measure Q2b:

- To measure Q1, connect H_{pot} to VTc1 (EE1512 for Q2b), and L_{pot} to VTd.
- To measure Q2, connect H_{pot} to VTe and L_{pot} to VTc1 (EE1512 for Q2b).
- To measure Q3, connect H_{pot} to VTd and L_{pot} to VTa1 (EE1412 for Q2b).
- To measure Q4, connect H_{pot} to VTb1 (EE1612 for Q2b) and L_{pot} to VTe.
- To measure total, connect H_{pot} to VTb1 (EE1612 for Q2b) and L_{pot} to VTa1 (EE1412 for Q2b).

7.10 Read Ls and Q from display and record in traveler.

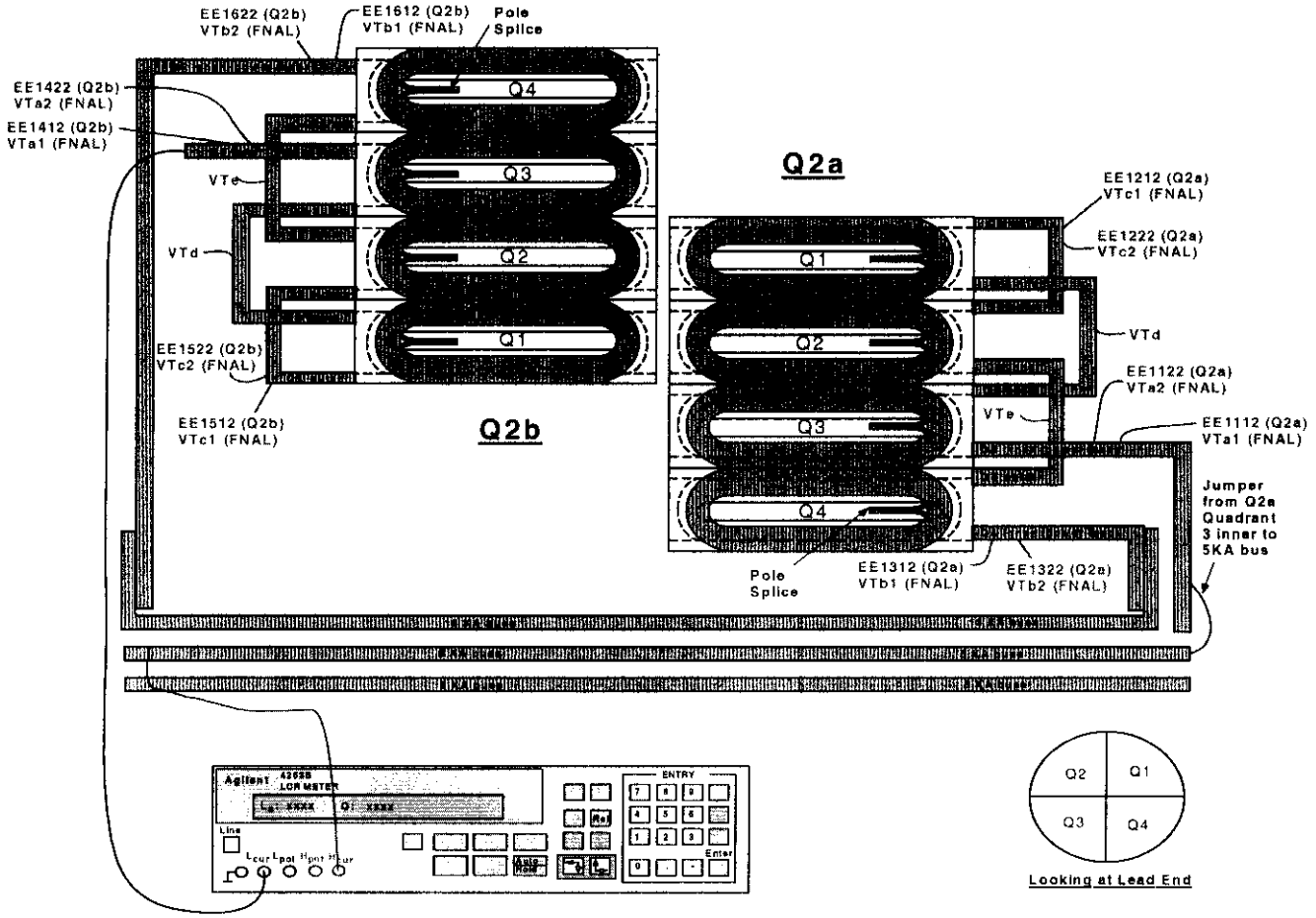

TABLE 7.0.1				
(Q2b) Inductance				Nominal ~ 3.34 to 3.48 mH
Voltage Tap Serial Numbers				Quadrant Total Inductance
Connect	Fermi	CERN	Quadrant	Fermi
H_{POT}	VTc1Q2b	EE1512	Quadrant 1	3.4298 mH
L_{POT}	VTdQ2b	EMPTY		
H_{POT}	VTeQ2b	EMPTY	Quadrant 2	3.4367 mH
L_{POT}	VTc1Q2b	EE1512		
H_{POT}	VTdQ2b	EMPTY	Quadrant 3	3.3783 mH
L_{POT}	VTa1Q2b	EE1412		
H_{POT}	VTb1Q2b	EE1612	Quadrant 4	3.4051 mH
L_{POT}	VTeQ2b	EMPTY		

TABLE 7.0.2				
				13.28 to 13.78 mH
				Fermi
H_{Pot}		EE1612	Total Cold Mass	13.650 mH
L_{Pot}	VTa1Q2b	EE1412		

Technician(s) _____ Date 9/15/04

TABLE 7.0.3				
(Q2b) Q-Factor				Nominal ~ 3.7 – 4.0
Voltage Tap Serial Numbers				Quadrant Total Q
Connect	Fermi	CERN	Quadrant	Fermi
H_{POT}	VTc1Q2b	EE1512	Quadrant 1	3.8
L_{POT}	VTdq2b	EMPTY		
H_{POT}	VTeQ2b	EMPTY	Quadrant 2	3.8
L_{POT}	VTc1Q2b	EE1512		
H_{POT}	VTdQ2b	EMPTY	Quadrant 3	3.8
L_{POT}	VTa1Q2b	EE1412		
H_{POT}	VTb1Q2b	EE1612	Quadrant 4	3.8
L_{POT}	VTeQ2b	EMPTY		

TABLE 7.0.4				
				Nominal ~ 3.7 to 4.0
				Fermi
H_{POT}	VTb1Q2b	EE1612	Total Cold Mass	3.8
L_{POT}	VTa1Q2b	EE1412		

Technician(s) _____ Date 9/15/04

8.0 Final Thermometer and Heater Electrical Inspection

To measure the resistance of a Thermometer (RTD):

Use Hewlett Packard HP3457A digital multimeter.

8.1 Record temperature of building within +/- 5 degrees.
8.2 Press line button to turn line on.
8.3 Connect wires as shown in Figure below.
U+ (Black) to Sense HI
I+ (Yellow) to Input HI
U- (Red) to Sense LO
I- (Green) to Input LO
8.4 Push blue button (function key) once.
8.5 Push OHMF button.
8.6 Verify arrow in readout is above the 4W□ (meaning a 4 wire resistance measurement).
8.7 Read resistance in ohms and record in traveler.

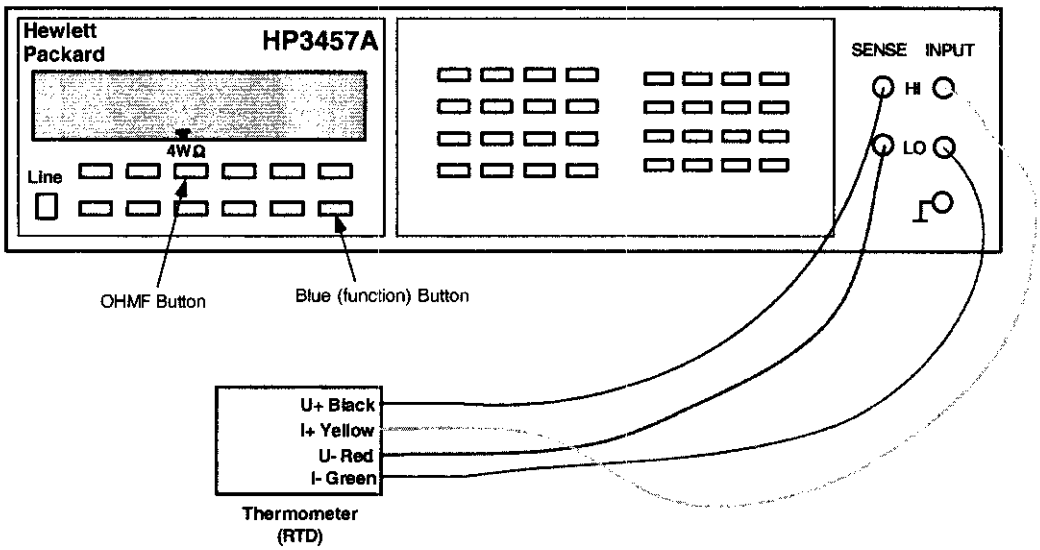

To measure the resistance of a Cryogenic (Warm-up) Heater

8.8 Use Hewlett Packard HP3457A digital multimeter.
8.9 Record temperature of building within +/- 5 degrees.
8.10 Press line button to turn line on.
8.11 Connect wires as shown in Figure below.
8.12 Push blue button (function key) once.
8.13 Push OHMF button.
8.14 Verify arrow in readout is above the 4W□ (meaning a 4 wire resistance measurement). Note: Although this is technically a 4 wire measurement, it is effectively a 2 wire measurement, since there are only 2 wires connected to each heater.
8.15 Read resistance in ohms and record in traveler.

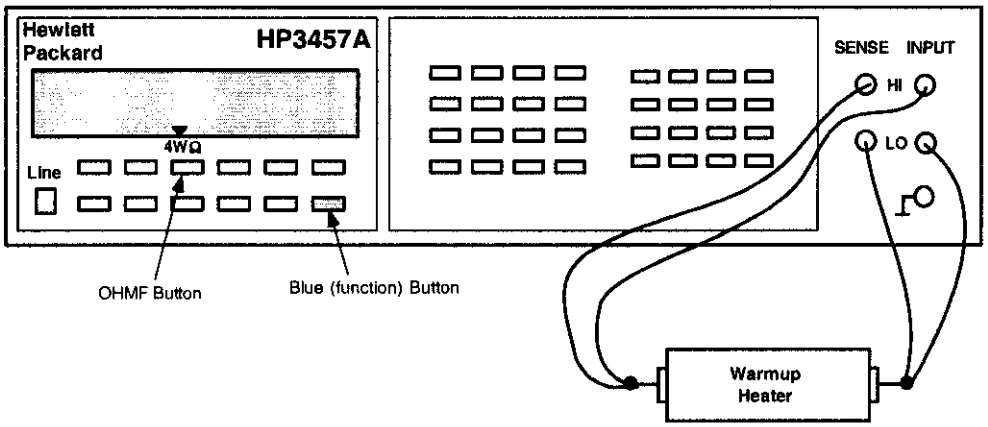

Table 8.0.1

Q2a – RTD's and Cryogenic (warm-up) Heaters

Temperature of Building (+/-5°):			Fermi 73 (F°)/C°	
Component	Fermi	CERN	Resistance	Resistance to Ground
Q2A RTD, Primary Serial # CX-LS-X 16131 Original Resistance: 66.578 Ω	TaQ2a	TT8312	67.361 Ω	MΩ >20 MOhms
Q2a RTD, redundant Serial # CX-LS-X 16744 Original Resistance: 65.616 Ω	TbQ2a	TT8322	66.659 Ω	MΩ >20 MOhms
Q2A Cryogenic (warm-up) Heater (LE) – wire toward cold mass end plate (CERN #11+)	W1aQ2A	EH8312+	18.180 Ω	MΩ >20 MOhms
Q2A Cryogenic (warm-up) Heater (LE) – wire toward cold mass mag center (CERN #11-)	W2aQ2A	EH8312-		
Q2A Cryogenic (warm-up) Heater (Non-LE) – wire toward cold mass end plate (CERN #21+)	W1bQ2A	EH8322+	17.821 Ω	MΩ >20 MOhms
Q2A Cryogenic (warm up) Heater (Non-LE) – wire toward cold mass mag center (CERN #21-)	W2bQ2A	EH8322-		

Technician(s) 9/15/04 Date

LHC Q2 LQXB Shipping Traveler

LHC Serial No LQXB04

Notes: Re-issued per DR No.] re-issued per DR HGQ-0495

Table 8.0.2				
Q2b – RTD's and Cryogenic (warm-up) Heaters				
Temperature of Building (+/-5°):			Fermi	
			73	F°/C°
Component	Fermi	CERN	Resistance	Resistance to Ground
Q2b RTD, Primary Serial # CX-LS-X16762 Original Resistance: 64.753 Ω	TaQ2b	TT8332	65.828 Ω	MΩ >20 MOhms
Q2b RTD, redundant Serial # CX-LS-X16770 Original Resistance: 64.062 Ω	TbQ2b	TT8342	65.306 Ω	MΩ >20 MOhms
Q2B Cryogenic (warm-up) Heater (LE) – wire toward cold mass end plate (CERN #11+)	W1aQ2b	EH8332+	17.409 Ω	MΩ >20 MOhms
Q2B Cryogenic (warm-up) Heater (LE) – wire toward cold mass mag center (CERN #11-)	W2aQ2b	EH8332-		
Q2B Cryogenic (warm-up) Heater (Non-LE) – wire toward cold mass end plate (CERN #21+)	W1bQ2b	EH8342+	17.739 Ω	MΩ >20 MOhms
Q2B Cryogenic (warm up) Heater (Non-LE) – wire toward cold mass mag center (CERN #21-)	W2bQ2b	EH8342-		

Using the Hewlett Packard HP3457A digital multimeter, measure the Strip Heater Resistance for Q2a and Q2b.

TABLE 8.0.3				
Q2a Strip Heater Resistance				
Fermi	CERN	Description	Limit	Fermi Resistance
H1aQ2a	YT1112+	Circuit A	18.20 to 21Ω	19.131 Ω
H2aQ2a	YT1112-			
H1bQ2a	YT1122+	Circuit B	18.20 to 21Ω	19.245 Ω
H2bQ2a	YT1122-			

TABLE 8.0.4				
Q2b Strip Heater Resistance				
Fermi	CERN	Description	Limit	Fermi Resistance
H1aQ2b	YT1132+	Circuit A	18.20 to 21Ω	18.344 Ω
H2aQ2b	YT1132-			
H1bQ2b	YT1142+	Circuit B	18.20 to 21Ω	18.408 Ω
H2bQ2b	YT1142-			

Technician(s) 9/15/04 Date

LHC Q2 LQXB Shipping Traveler

LHC Serial No LQXB04

Notes: Re-issued per DR No.] re-issued per DR HGQ-0495

9.0 Final Power Lead Electrical Inspection

9.1 Using the HP3457A, connect power thru the connector Power Leads (HA2 and HB2 to measure Q2-H2 or VA2 and VB2 to measure Q2-V2).

Connect the Sense Leads as shown in table below and record resistance.

(Magnet Bus Leads) **(Corrector Bus Leads)**

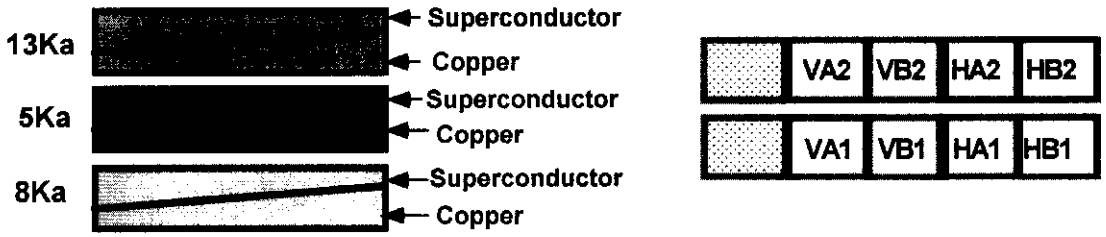

(View Looking into Q2b)

TABLE 9.0.1			
MCBX Corrector Coil Taps			
Component	Fermilab Label	CERN Label	Fermi Resistance Nominal 0.040 Ω
Q2-H2	VTH2	EE8122	38.9 mΩ
	HA2	N/A	
Q2-V2	VTV2	EE8112	39.0 mΩ
	VA2	N/A	

Technician(s) Date 9/15/04

XXX 9.2 Hipot according to table below. Hipot to 1500V. Ramp Rate XXV/second. Dwell Time 30 seconds. Maximum leakage is 3μA.

Hipot Heaters to Coil and Ground.

TABLE 9.0.2			
High Potential	Grounded	Floating	Fermi Leakage
All Strip Heaters	Coils, Yoke, Q1 Instrumentation Bus, Lead and Corrector Coil Busses, RTD's and Warm-up Heaters	Nothing	399 nA

Hipot Coil to Heaters and Ground.

TABLE 9.0.3			
High Potential	Grounded	Floating	Fermi Leakage
All Coils	Strip Heaters, Yoke, Q1 Instrumentation Bus, 8kA and 5kA Lead Busses and Corrector Coil Busses, RTD's and Warm-up Heaters	Nothing	1168 nA

Technician(s) Date 9/16/04

Responsible Authority/Physicist Date 9/16/04

9.3 Check Q1 Instrumentation Bus Wires for Continuity.

TABLE 9.0.4

Module	Pin	Fermi	CERN	KEK	Description	Fermi Done
M2	1	VTa1Q1	EE1111	a1	Q1 Lead Voltage Tap "a", primary	✓
M2	2	VTa2Q1	EE1121	a2	Q1 Lead Voltage Tap "a", redundant	✓
M2	3	VTc1Q1	EE1211	c1	Q1 Center Voltage Tap "c", primary	✓
M2	4	VTc2Q1	EE1221	c2	Q1 Center Voltage Tap "c", redundant	✓
M2	5	VTb1Q1	EE1311	b1	Q1 Lead Voltage Tap "b", primary	✓
M3	5	VTb2Q1	EE1321	b2	Q1 Lead Voltage Tap "b", redundant	✓
M5	1	VTH1	EE8121		Corrector voltage tap Q1-H1 (skew dipole) (on MCBX, MCBXH, A+ lead)	✓
M5	2	VTV1	EE8111		Corrector voltage tap Q1-V1 (normal dipole) (on MCBX, MCBXV A+ lead)	✓
M7	1	W1aQ1	EH8311+		Q1 Cryogenic Heater lead end - wire at top (CERN #1 I+)	✓
M7	2	W2aQ1	EH8311-		Q1 Cryogenic Heater lead end - wire at bottom (CERN #1 I-)	✓
M7	3	W1bQ1	EH8321+		Q1 Cryogenic Heater non-lead end - wire at top (CERN #2 I+)	✓
M7	4	W2bQ1	EH8321-		Q1 Cryogenic Heater non-lead end - wire at bottom (CERN #2 I-)	✓
M9	1	H1aQ1	YT1111+	HA1	Q1 Protection (Strip) Heater, ("a" circuit) (CERN lead #1+)	✓
M9	3	H2aQ1	YT1111-	HA2	Q1Protection (Strip) Heater, ("a" circuit) (CERN lead #1-)	✓
M9	5	H1bQ1	YT1121+	HB1	Q1 Protection (Strip) Heater, ("b" circuit) (CERN lead #2+)	✓
M10	4	H2bQ1	YT1121-	HB2	Q1 Protection (Strip) Heater, ("b" circuit) (CERN lead #2-)	✓
M12	1	TaQ1_I+	TT8311 I+		Q1 RTD, primary Wire color: Yellow	✓
M12	2	TaQ1_I-	TT8311 I-		Q1 RTD, primary Wire color: Green	✓
M12	3	TaQ1_V+	TT8311 U+		Q1 RTD, primary Wire color: Black	✓
M12	4	TaQ1_V-	TT8311 U-		Q1 RTD, primary Wire color: Red	✓
M12	5	TbQ1_I+	TT8321 I+		Q1 RTD, primary Wire color: Yellow	✓
M12	6	TbQ1_I-	TT8321 I-		Q1 RTD, primary Wire color: Green	✓
M12	11	TbQ1_V+	TT8321 U+		Q1 RTD, primary Wire color: Black	✓
M12	10	TbQ1_V-	TT8321 U-		Q1 RTD, primary Wire color: Red	✓

Technician(s) _____ Date 9/17/04

10.0 Shipping the Magnet

10.1 Acquire the Shipping Frame Assembly (ME-390686).

10.2 Acquire the following shipping hardware:

Eyebolt	McMaster-Carr 3016T87	6 ea
Eyebolt	McMaster-Carr 3016T85	6 ea
Hex Nut	MA-393328	24 ea
Flat Washer	MA-393328	12 ea
Lock Washer	MA-393329	12 ea
Chain w/2 Hooks	MA-390702	6 ea
Mouting Bolts	MA-393321	9 ea
Flat Washer	MA-393323	9 ea
Lcok Washer	MA-393322	9 ea
Hoist Rings	McMaster-Carr (2994767)	10 ea

10.3 Remove the Hoist Rings (4 ea) from the Outer Frame as per ME-390710.

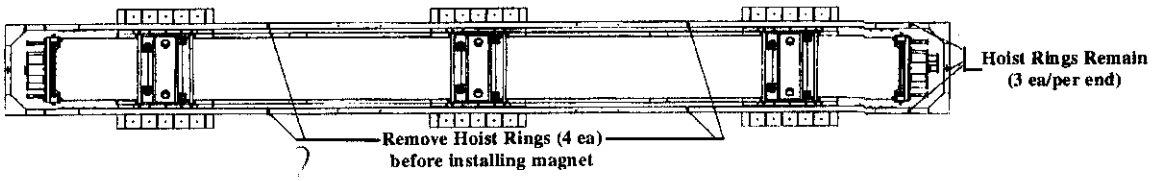

Technician(s)

9-17-04
Date

14.0 Installation of Hypertronics

14.1 Install Hypertronics Connectors at **Q2a** end as per Q2 Cold Mass Welded Assembly (ME-390309) and Hypertronics Connector Assembly Q2 Magnet Return End (MB-418133). Pin Numbers for connectors are shown in Table 14.1 below.

Table 14.1

Q2 connector (ip, or Q2a end) for Q1-Q2 connection. Completed on 11-20-03.					
Module	**Pin**	**Fermilab Label**	**CERN Label**	**KEK Label**	**Description**
M1	1				Blank Module
M1	2				
M1	3				
M1	4				
M1	5				
M2	1	VTa1Q1	EE1111	a1	Q1 Lead Voltage Tap "a", primary
M2	2	VTa2Q1	EE1121	a2	Q1 Lead Voltage Tap "a",redundant
M2	3	VTc1Q1	EE1211	c1	Q1 Center Voltage Tap "c", primary
M2	4	VTc2Q1	EE1221	c2	Q1 Center Voltage Tap "c", redundant
M2	5	VTb1Q1	EE1311	b1	Q1 Lead Voltage Tap "b", primary
M3	1	Empty	Empty		No Connection
M3	2	Empty	Empty		No Connection
M3	3	Empty	Empty		No Connection
M3	4	Empty	Empty		No Connection
M3	5	VTb2Q1	EE1321	b2	Q1 Lead Voltage Tap "b",redundant
M4	1				Blank Module
M4	2				
M4	3				
M4	4				
M4	5				
M5	1	VTH1	EE8121		Corrector voltage tap Q1-H1 (skew dipole) (on MCBX, MCBXH, A+ lead)
M5	2	VTV1	EE8111		Corrector voltage tap Q1-V1 (normal dipole) (on MCBX, MCBXV A+ lead)
M5	3	Empty	Empty		No Connection
M5	4	Empty	Empty		No Connection
M5	5	Empty	Empty		No Connection

Table 14.1

Module	Pin	Fermilab Label	CERN Label	KEK Label	Description
M6	1				Blank Module
M6	2				
M6	3				
M6	4				
M6	5				
M7	1	W1aQ1	EH8311+		Q1 Cryogenic Heater lead end - wire at top (CERN #1 I+)
M7	2	W2aQ1	EH8311-		Q1 Cryogenic Heater lead end - wire at bottom (CERN #1 I-)
M7	3	W1bQ1	EH8321+		Q1 Cryogenic Heater non-lead end - wire at top (CERN #2 I+)
M7	4	W2bQ1	EH8321-		Q1 Cryogenic Heater non-lead end - wire at bottom (CERN #2 I-)
M7	5	Empty	Empty		No connection
M8	1				Blank Module
M8	2				
M8	3				
M8	4				
M8	5				
M9	1	H1aQ1	YT1111+	HA1	Q1 Protection (Strip) Heater, ("a" circuit) (CERN lead #1+)
M9	2	Empty	Empty		No connection
M9	3	H2aQ1	YT1111-	HA2	Q1Protection (Strip) Heater, ("a" circuit) (CERN lead #1-)
M9	4	Empty	Empty		No connection
M9	5	H1bQ1	YT1121+	HB1	Q1 Protection (Strip) Heater, ("b" circuit) (CERN lead #2+)
M10	1	Empty	Empty		No Connection
M10	2	Empty	Empty		No Connection
M10	3	Empty	Empty		No Connection
M10	4	H2bQ1	YT1121-	HB2	Q1 Protection (Strip) Heater, ("b" circuit) (CERN lead #2-)
M10	5	Empty	Empty		No Connection

Table 14.1

Module	Pin	Fermilab Label	CERN Label	KEK Label	Description
M11	1				Blank Module
M11	2				
M11	3				
M11	4				
M11	5				
Note: Pin numbers of Module M12 are not listed in numerical order					
M12	1	TaQ1_I+	TT8311 I+		Q1 RTD, primary Wire color: Yellow
M12	2	TaQ1_I-	TT8311 I-		Q1 RTD, primary Wire color: Green
M12	3	TaQ1_V+	TT8311 U+		Q1 RTD, primary Wire color: Black
M12	4	TaQ1_V-	TT8311 U-		Q1 RTD, primary Wire color: Red
M12	5	TbQ1_I+	TT8321 I+		Q1 RTD, redundant: Wire color: Yellow
M12	6	TbQ1_I-	TT8321 I-		Q1 RTD, redundant: Wire color: Green
M12	11	TbQ1_V+	TT8321 U+		Q1 RTD, redundant: Wire color: Black
M12	10	TbQ1_V-	TT8321 U-		Q1 RTD, redundant: Wire color: Red
M12	9	Empty	Empty		No connection
M12	8	Empty	Empty		No connection
M12	7	Empty	Empty		No connection
M12	12	Empty	Empty		No connection
M12	13	Empty	Empty		No connection
M12	14	Empty	Empty		No connection
M12	15	Empty	Empty		No connection
M12	16	Empty	Empty		No connection
M12	17	Empty	Empty		No connection

Hypertronics Connector Pin Locations for Q2 (ip, or Q2a end)
VIEW: Female (receptacle) solder cup side

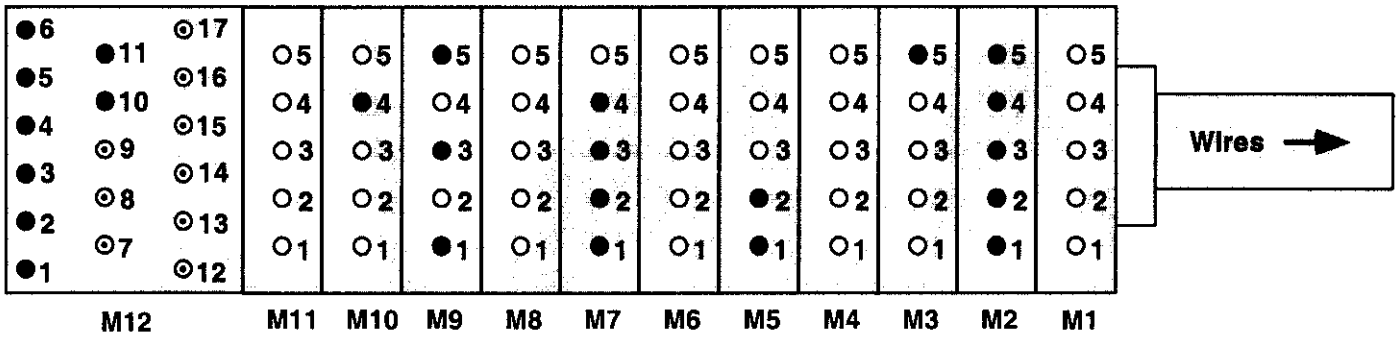

- ● Hole filled in grey: Wire soldered to pin.
- ⊙ Hole with dot in center: Pin exists but no wire soldered to it.
- ○ Hole filled in white: No pin. Hole is drilled out.

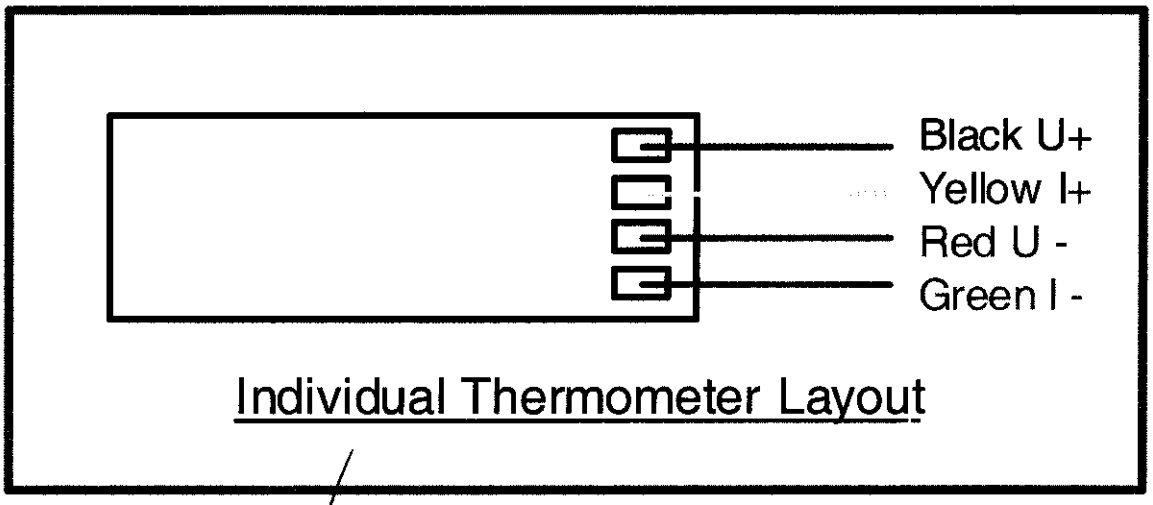

N/A

Technician(s) _____ Date _____

14.2 Install Hypertronics Connectors at **Q2b** end as per Q2 Cold Mass Welded Assembly (ME-390309) and Hypertronics Connector Assembly (MB-418083).
Pin Numbers for connectors are shown in Table 14.2 below.

Table 14.2

Q2 connector (non-ip, or Q2b end) for Q2-Q3 connection Completed on 11-20-03					
Module	**Pin**	**Fermilab Label**	**CERN Label**	**KEK Label**	**Description**
M1	1				Blank Module
M1	2				
M1	3				
M1	4				
M1	5				
M2	1	VTa1Q1	EE1111	a1	Q1 Lead Voltage Tap "a" , primary
M2	2	VTa2Q1	EE1121	a2	Q1 Lead Voltage Tap "a", redundant
M2	3	VTc1Q1	EE1211	c1	Q1 Center Voltage Tap "c", primary
M2	4	VTc2Q1	EE1221	c2	Q1 Center Voltage Tap "c", redundant
M2	5	VTb1Q1	EE1311	b1	Q1 Lead Voltage Tap "b", primary
M3	1	VTc1Q2a	EE1212		Q2a Center Voltage Tap "c", primary
M3	2	VTdQ2a	Empty		Q2a Quarter Coil Voltage Tap "d" (Q1inner-Q3 outer interface)
M3	3	VTa2Q2a	EE1122		Q2a lead Voltage Tap "a", redundant
M3	4	VTa1Q2a	EE1112		Q2a Lead Voltage Tap "a", primary
M3	5	VTb2Q1	EE1321	b2	Q1 Lead Voltage Tap "b", redundant
M4	1	VTc2Q2a	EE1222		Q2a Center Voltage Tap "c", redundant
M4	2	VTeQ2a	Empty		Q2a Quarter Voltage Tap "e", (Q2 inner -Q4 outer interface)
M4	3	VTb1Q2a	EE1312		Q2a Lead Voltage Tap "b", primary
M4	4	VTb2Q2a	EE1322		Q2a Lead Voltage Tap "b", redundant
M4	5	VTb1Q2b	EE1612		Q2b lead Voltage Tap "b", primary
M5	1	VTdQ2b	Empty		Q2b Quarter Coil Voltage Tap "d" (Q1inner-Q3 outer interface)
M5	2	VTc2Q2b	EE1522		Q2b Center Voltage Tap "c", redundant
M5	3	VTc1Q2b	EE1512		Q2b Center Voltage Tap "c", primary
M5	4	VTeQ2b	Empty		Q2b Quarter Voltage Tap "e", (Q2 inner -Q4 outer interface)
M5	5	VTb2Q2b	EE1622		Q2b Lead Voltage Tap "b" redundant

Table 14.2

Module	Pin	Fermilab Label	CERN Label	KEK Label	Description
M6	1	VTa1Q2b	EE1412		Q2b Lead Voltage Tap "a", primary
M6	2	VTa2Q2b	EE1422		Q2b Lead Voltage Tap "a", redundant
M6	3	Empty	Empty		No connection
M6	4	Empty	Empty		No connection
M6	5	Empty	Empty		No connection
M7	1				Blank Module
M7	2				
M7	3				
M7	4				
M7	5				
M8	1	VTH1	EE8121		Corrector voltage tap Q1-H1 (skew dipole) (on MCBX, MCBXH, A+ lead)
M8	2	VTV1	EE8111		Corrector voltage tap Q1-V1 (normal dipole) (on MCBX, MCBXV A+ lead)
M8	3	VTH2	EE8122		Corrector voltage tap Q2-H2 (skew dipole) (on MCBX, MCBXH, A+ lead)
M8	4	VTV2	EE8112		Corrector voltage tap Q2-V2 (normal dipole) (on MCBX, MCBXV, A+ lead)
M8	5	Empty	Empty		No connection
M9	1				Blank Module
M9	2				
M9	3				
M9	4				
M9	5				
M10	1	W1aQ1	EH8311+		Q1 Cryogenic Heater lead end - wire at top (CERN #1 I+)
M10	2	W2aQ1	EH8311-		Q1 Cryogenic Heater lead end - wire at bottom (CERN #1 I-)
M10	3	W1bQ1	EH8321+		Q1 Cryogenic Heater non-lead end - wire at top (CERN #2 I+)
M10	4	W2bQ1	EH8321-		Q1 Cryogenic Heater non-lead end - wire at bottom (CERN #2 I-)
M10	5	Empty	Empty		No connection

Table 14.2

Module	Pin	Fermilab Label	CERN Label	KEK Label	Description
M11	1	W1aQ2A	EH8312+		Q2A Cryogenic Heater lead end - wire toward cold mass end plate (CERN #1 I+)
M11	2	W2aQ2A	EH8312-		Q2A Cryogenic Heater lead end - wire toward cold mass mag center (CERN #1 I-)
M11	3	W1bQ2A	EH8322+		Q2A Cryogenic Heater non-lead end- wire toward cold mass end plate (CERN #2 I+)
M11	4	W2bQ2A	EH8322-		Q2A Cryogenic Heater non-lead end- wire toward cold mass mag center (CERN #2 I-)
M11	5	Empty	Empty		No connection
M12	1	W1aQ2B	EH8332+		Q2B Cryogenic Heater lead end - wire toward cold mass end plate (CERN #1 I+)
M12	2	W2aQ2B	EH8332-		Q2B Cryogenic Heater lead end - wire toward cold mass mag center (CERN #1 I-)
M12	3	W1bQ2B	EH8342+		Q2B Cryogenic Heater non-lead end- wire toward cold mass end plate (CERN #2 I+)
M12	4	W2bQ2B	EH8342-		Q2B Cryogenic Heater non-lead end- wire toward cold mass mag center (CERN #2 I-)
M12	5	Empty	Empty		No connection
M13	1				Blank Module
M13	2				
M13	3				
M13	4				
M13	5				
M14	1	H1aQ1	YT1111+	HA1	Q1 Protection (Strip) Heater, ("a" circuit) (CERN lead #1+)
M14	2	Empty	Empty		No connection
M14	3	H2aQ1	YT1111-	HA2	Q1Protection (Strip) Heater, ("a" circuit) (CERN lead #1-)
M14	4	Empty	Empty		No connection
M14	5	H1bQ1	YT1121+	HB1	Q1 Protection (Strip) Heater, ("b" circuit) (CERN lead #2+)

Table 14.2

Module	Pin	Fermilab Label	CERN Label	KEK Label	Description
M15	1	Empty	Empty		No connection
M15	2	H1aQ2a	YT1112+		Q2a Protection (Strip) Heater, 1-4 & 2-3 circuit (FNAL lead A+) (CERN lead #1+)
M15	3	Empty	Empty		No connection
M15	4	H2bQ1	YT1121-	HB2	Q1 Protection (Strip) Heater, ("b" circuit) (CERN lead #2-)
M15	5	Empty	Empty		No connection
M16	1	H2aQ2a	YT1112-		Q2a Protection (Strip) Heater, 1-4 & 2-3 circuit (FNAL lead A-) (CERN lead #1-)
M16	2	Empty	Empty		No connection
M16	3	H1bQ2a	YT1122+		Q2a Protection (Strip) Heater, 1-2 & 3-4 circuit (FNAL lead B+) (CERN lead#2+)
M16	4	Empty	Empty		No connection
M16	5	H2bQ2a	YT1122-		Q2a Protection (Strip) Heater, 1-2 & 3-4 circuit (FNAL lead B-) (CERN lead #2-)
M17	1	Empty	Empty		No connection
M17	2	H2aQ2b	YT1132-		Q2b Protection (Strip) Heater, 1-4 & 2-3 circuit (FNAL lead A-) (CERN lead #1-)
M17	3	Empty	Empty		No connection
M17	4	H1aQ2b	YT1132+		Q2b Protection (Strip) Heater, 1-4 & 2-3 circuit (FNAL lead A+) (CERN lead #1+)
M17	5	Empty	Empty		No connection
M18	1	H1bQ2b	YT1142+		Q2b Protection (Strip) Heater, 1-2 & 3-4 circuit (FNAL lead B+) (CERN lead#2+)
M18	2	Empty	Empty		No connection
M18	3	H2bQ2b	YT1142-		Q2b Protection (Strip) Heater, 1-2 & 3-4 circuit (FNAL lead B-) (CERN lead #2-)
M18	4	Empty	Empty		No connection
M18	5	Empty	Empty		No connection

Table 14.2

Module	Pin	Fermilab Label	CERN Label	KEK Label	Description
M19	1				Blank Module
M19	2				
M19	3				
M19	4				
M19	5				
Note: Pin numbers of Module M20 are not listed in numerical order					
M20	1	TaQ1_I+	TT8311 I+		Q1 RTD, primary Wire color: Yellow
M20	2	TaQ1_I-	TT8311 I-		Q1 RTD, primary Wire color: Green
M20	3	TaQ1_V+	TT8311 U+		Q1 RTD, primary Wire color: Black
M20	4	TaQ1_V-	TT8311 U-		Q1 RTD, primary Wire color: Red
M20	5	TbQ1_I+	TT8321 I+		Q1 RTD, redundant: Wire color: Yellow
M20	6	TbQ1_I-	TT8321 I-		Q1 RTD, redundant: Wire color: Green
M20	11	TbQ1_V+	TT8321 U+		Q1 RTD, redundant: Wire color: Black
M20	10	TbQ1_V-	TT8321 U-		Q1 RTD, redundant: Wire color: Red
M20	9	TaQ2a_I+	TT8312 I+		Q2a RTD, primary Wire color: Yellow
M20	8	TaQ2a_I-	TT8312 I-		Q2a RTD, primary Wire color: Green
M20	7	TaQ2a_V+	TT8312 U+		Q2a RTD, primary Wire color: Black
M20	12	TaQ2a_V-	TT8312 U-		Q2a RTD, primary Wire color: Red
M20	13	TbQ2a_I+	TT8322 I+		Q2a RTD, redundant: Wire color: Yellow
M20	14	TbQ2a_I-	TT8322 I-		Q2a RTD, redundant: Wire color: Green
M20	15	TbQ2a_V+	TT8322 U+		Q2a RTD, redundant: Wire color: Black
M20	16	TbQ2a_V-	TT8322 U-		Q2a RTD, redundant: Wire color: Red
M20	17	Empty	Empty		No connection

Table 14.2

Note: Pin numbers of Module M21 are not listed in numerical order					
Module	**Pin**	**Fermilab Label**	**CERN Label**	**KEK Label**	**Description**
M21	1	TaQ2b_I+	TT8332 I+		Q2b RTD, primary Wire color: Yellow
M21	2	TaQ2b_I-	TT8332 I-		Q2b RTD, primary Wire color: Green
M21	3	TaQ2b_V+	TT8332 U+		Q2b RTD, primary Wire color: Black
M21	4	TaQ2b_V-	TT8332 U-		Q2b RTD, primary Wire color: Red
M21	5	TbQ2b_I+	TT8342 I+		Q2b RTD, redundant: Wire color: Yellow
M21	6	TbQ2b_I-	TT8342 I-		Q2b RTD, redundant: Wire color: Green
M21	11	TbQ2b_V+	TT8342 U+		Q2b RTD, redundant: Wire color: Black
M21	10	TbQ2b_V-	TT8342 U-		Q2b RTD, redundant: Wire color: Red
M21	9	Empty	Empty		No connection
M21	8	Empty	Empty		No connection
M21	7	Empty	Empty		No connection
M21	12	Empty	Empty		No connection
M21	13	Empty	Empty		No connection
M21	14	Empty	Empty		No connection
M21	15	Empty	Empty		No connection
M21	16	Empty	Empty		No connection
M21	17	Empty	Empty		No connection

Hypertronics Connector pin locations for Q2 (non-ip, or Q2b end)
VIEW: Male (pin) solder cup side

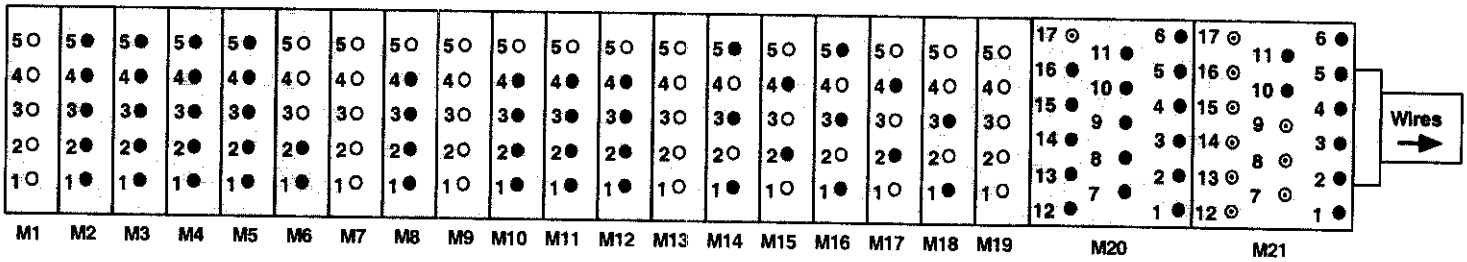

● **Hole filled in grey: Wire soldered to pin.**
⊙ **Hole with dot in center: Pin exists but no wire soldered to it.**
○ **Hole filled in white: No pin. Hole is drilled out.**

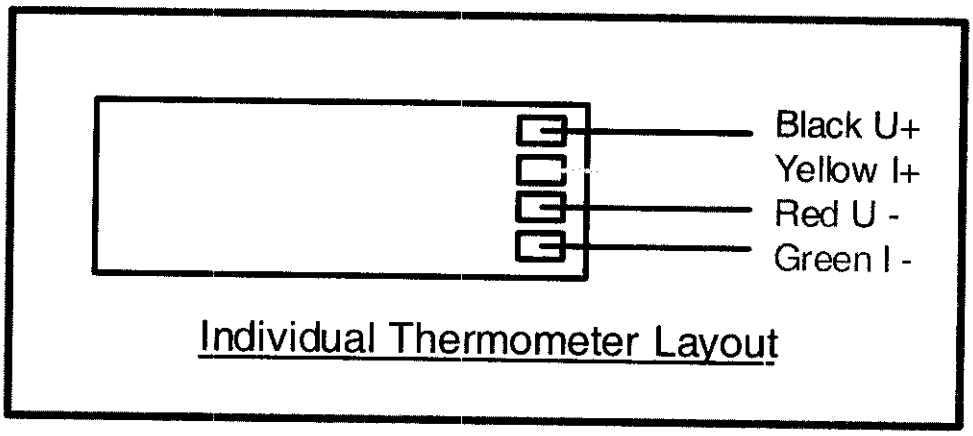

Technician(s) — Date 9/16/04

XXX 14.3 Check installation of Hypertronics. Ensure Hypertronics were installed as per Q2 Cold Mass Welded Assembly (ME-390309), Hypertronics Connector Assembly Q2 Magnet Return End (MB-418133) and Hypertronics Connector Assembly (MB-418083).

Technician(s) — Date 9/16/04

Responsible Authority/Physicist — Date 9/16/04