Document ID: 973

Q2 LMQXB Cold Mass Module Assembly Traveler

333643 / Rev. B

Job No:	**248**
E + F Project/Task No.:	**300/1.1.1.6.2**
M + S Project/Task No.:	**300/1.1.1.6.2**

Place This Side Down For Scanning!!!

LMQXB05-0

Document ID:

973

Job No.:

248

Project/Task No.

300/1.1.1.6.2

Series:

LQXB

Serial No:

LMQXB05

Rework ID:

0

Specification No.:

333643

Revision:

B

LMQXB05-0

Fermi National Accelerator Laboratory
Batavia, IL 60510

LARGE HADRON COLLIDER
Q2 - LMQXB
COLD MASS MODULE ASSEMBLY TRAVELER

Reference Drawing(s):
Q2 Cold Mass Welded Assembly (ME-390309)
Q2 Module Assembly (ME-369895)

Project/Task Number:

Released By: *John Szostak* **Magnet/Device Series:** *LQXB*

Date Issued: *1/15/2004 2:42:46 PM* **Scanned Pages:** 182

Prepared by: J. Szostak

Title	Signature	Date
TD / E&F Process Engineering	*Jamie Blowers* Bob Jensen / Designee	*1/15/04*
TD / LHC Production Supervisor	*Jim Rife* Jim Rife / Designee	*1/15/04*
TD / LHC Production Engineer	*Rodger Bossert* Rodger Bossert / Designee	*1/15/04*
TD / LHC Project Engineer Cryostat	*Tom Nicol* Tom Nicol / Designee	*1/15/04*
TD / LHC Project Physicist	*Mike Lamm* Michael Lamm / Designee	*1/15/04*
TD / LHC Program Manager	*Jim Kerby* Jim Kerby / Designee	*1/15/04*

Revision Page (1 of 2)

Revision	Step No.	Revision Description	TRR No.	Date
None	N/A	Initial Release	N/A	10/15/02
A	6.5	Modified Step. Changed MiniLevel Tolerance to +/- 0.05 mm/m per Tom Page.	1513	7/17/03
	6.10	Modified Step. Changed MiniLevel Tolerance to +/- 0.05 mm/m per Tom Page.		
	7.18	Modified Step. Changed to "Cut Q2b Quadrant 4 Lead at end of splice per Drawing (ME-369895)."		
	7.22	Modified Step. Added Picture to show all three Bus Leads. (13kA, 5kA 8kA)		
	7.29.2	Modified Step. Changed End of step to read "...Figure 7.29.2-A below." Corrected Picture to reflect accurate wiring diagram. Per **DR No. HGQ-0374**.		
	7.36	Modified Step. Changed MiniLevel Tolerance to +/- 0.05 mm/m per Tom Page.		
	8.1	Modified Step. Added Voltage Tap Serial Numbers to Tables.		
	11.11	Added Step. "Tack weld the corrector mounting hardware in place as per Q2 Coldmass Welded Assembly (ME-390309)."		
	11.13	Added Step. "Mount and adjust the Shipping restraint screws."		
	13.1	Modified Step. Added Voltage Tap Serial Numbers to Tables.		
	14.1	Modified Step. Added new wire information for installation of Hypertronics per Mike Lamm.		
	14.2	Modified Step. Added new wire information for installation of Hypertronics per Mike Lamm.		
B	6.11	Added Step. "Perform a Stretched Wire Verification Measurement."	1578	1/15/04
	7.1	Removed Step. "Obtain Lead Bus (ME-369825). Inspect Bus for damaged or broken areas. Clean Bus using lint free Heavy Duty Wipers (Fermi stock 1660-0150) and Isopropyl Alcohol (Fermi stock 1920-0300)." Moved to Q2 Insulated Bus Assembly Traveler (333721) per LMQXB04. Step 5.3		
	7.2	Removed Step. "Obtain parts for Bus Assembly (ME-369826) and assemble per Q2 Module Assembly Insulated Bus Assembly (ME-369826)." Moved to Q2 Insulated Bus Assembly Traveler (333721) per LMQXB04. Step 5.4		
	7.3	Removed Step. "Verify Bus Assembly (ME-369826) is assembled correctly per Q2 Module Assembly Insulated Bus Assembly (ME-369826)." Moved to Q2 Insulated Bus Assembly Traveler (333721) per LMQXB04. Step 5.5		
	7.4	Removed Step. "Hipot the 5kA Lead Bus to the 8kA and 13 kA Lead Busses on table before inserting into magnets. Power the 5kA bus to 5000V and ground the 13kA Lead Bus and the 8kA Lead Bus. **(Max. Leakage < 0.5μA).**" Moved to Q2 Bus Assembly Traveler (333721) per LMQXB04. Step 5.6		
	7.5	Removed Step. "Hipot the Corrector Magnet (MD-390312) Busses at 5kV before inserting into magnet in both the parallel and checkerboard configurations as shown below. Corrector Wires not shaded should be at high potential, while those shaded should be connected to each other and grounded. **(Max. Leakage < 0.5μA)**" Moved to Q2 Bus Assembly Traveler (333721) per LMQXB04. Step 5.7		
	7.22	Modified Step. Added a "Floating" Column Header to Table 7.22 and "RTD's and Warm-up Heaters" in that column.		
	7.23	Modified Step. Added Note. "**All wires in this table have been previously soldered to the Magnet except for the Cryogenic (warm-up) Heater Wires.**" Modified Table 7.23. Added CERN Labels per Rodger Bossert. Added Technician Signoff per LQXB04.		

Revision Page (1 of 2)

Revision	Step No.	Revision Description	TRR No.	Date
B (Continued)	7.27	Modified Step. Added "Attach Instrumentation Bus Channel Lock (MB-369937) to Q2b Non Lead End as per Q2 Module Assembly (ME-369895, page 4 of 4)"	1578 (Continued)	1/15/04
	8.0	Modified Step. Changed electrical procedure specifications per Rodger Bossert. Added new tables with CERN Labels and new pictures.		
	11.3	Modified Step. Changed to "Install Spider Assembly (MC-430044) to protect wires." Removed checkboxes and added Responsible Authority signoff.		
	11.8	Removed Step. "Install Spider Assemblies (MC-369885) to protect wires/bus, if necessary."		
	13.0	Modified Step. Changed electrical procedure specifications per Rodger Bossert. Added new tables with CERN Labels and new pictures.		
	15.0	Modified Step. Changed electrical procedure specifications per Rodger Bossert. Added new tables with CERN Labels and new pictures.		

Ensure appropriate memos and specific instructions are placed with the traveler before issuing the sub traveler binder to production.

1.0 General Notes

1.1 All steps that require a sign-off shall include the Technician/Technician(s)s first initial and full last name.

1.2 No erasures or white out will be permitted to any documentation. All incorrectly entered data shall be corrected by placing a single line through the error, initial and date the error before adding the correct data.

1.3 All Discrepancy Reports issued shall be recorded in the left margin next to the applicable step.

1.4 All personnel performing steps in this traveler must have documented training for this traveler and associated operating procedures.

1.5 Personnel shall perform all tasks in accordance with current applicable ES&H guidelines and those specified within the step.

1.6 Cover the product/assembly with Green Herculite (Fermi stock 1740-0100) when not being serviced or assembled.

2.0 Parts Kit List

2.1 Attach the completed Parts Kit for this production operation to this traveler. Ensure that the serial number on the Parts Kit matches the serial number of this traveler. Verify that the Parts Kit received is complete.

J. Grostah
Process Engineering/Designee

1/15/04
Date

3.0 Q2 Module Alignment

XXX 3.1 Record the serial number for each Magnetic Component Assembly.

Q2a Serial Number: MQXB 11

Q2b Serial Number: MQXB 08

MCBX Serial Number: HLMCBX_001_SI000012

Responsible Authority/Physicist — Date 1/9/04

3.2 File the End Plate Welds, and Alignment Welds at the Non-Lead End of Coldmass Q2a to allow Center Body Tube (MC-390112) to fit properly.

Technician(s) — Date 1/9/04

4.0 Q2a Magnet Placement (Module Assembly Tooling)

4.1 Configure tooling for Q2a/Q2b Cold Mass assembly per (ME-369768).

Technician(s) _____ Date 1/9/04

4.2 Configure tooling for Corrector Mounting per (ME-369780), 13.780 Diameter Corrector Magnet.

Technician(s) _____ Date 1/9/04

4.3 Configure tooling for End Dome Mounting per (ME-369765, View F-F) (Insert Item 22).

Technician(s) _____ Date 1/9/04

4.4 Move the Q2a Cold Mass to the Cold Mass Module Assembly Tooling, placing it nearest the East End of ICB, with the Lead End of the Magnet facing East as per Q2 Cold Mass Welded Assembly (ME-390309).

Technician(s) _____ Date 1/9/04

4.5 Rotate the Q2a Cold Mass, such that the Weld Keys are approximately at a 45° diagonal.

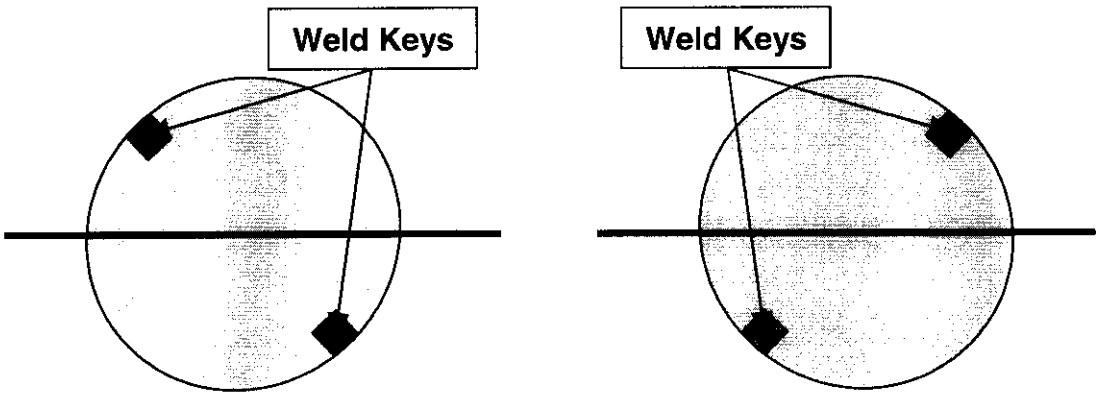

Lead End Non-Lead End

Technician(s) _____ Date 1/9/04

4.6 Slide the Center Body Tube (MC-390112) over Return End of Q2a Coldmass as per Q2 Cold Mass Welded Assembly (ME-390309).

Technician(s) _____ Date 1/9/04

5.0 Q2b Magnet Placement (Module Assembly Tooling)

5.1 Move the Q2b Cold Mass to the Cold Mass Module Assembly Tooling, placing it nearest the West End of ICB, with the Lead End of the Magnet Facing West as per Q2 Cold Mass Welded Assembly (ME-390309).

Technician(s) _____ Date 1/9/04

5.2 Position the Cold Masses so that the distance from the magnetic center of Q2a Cold Mass to the magnetic center of Q2b Cold Mass as denoted by the markings on the OD of the Cold Mass is 6524mm +/- 2 mm

Note(s):

Needs to be the warm magnetic offset 6519.6 mm, plus 3/16" (4.4mm) allowance for weld shrinkage.

Technician(s) _____ Date 1/9/04

5.3 Rotate the Q2b Cold Mass such that the Weld Keys are approximately at a 45° diagonal.

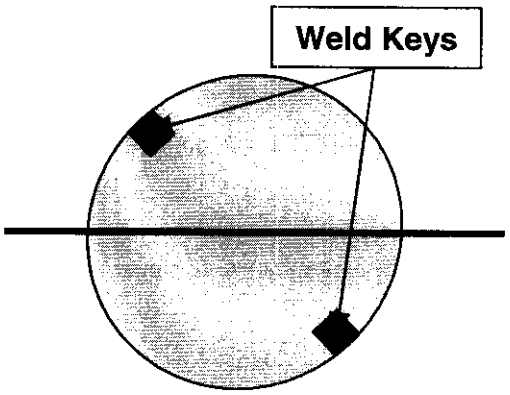

Lead End

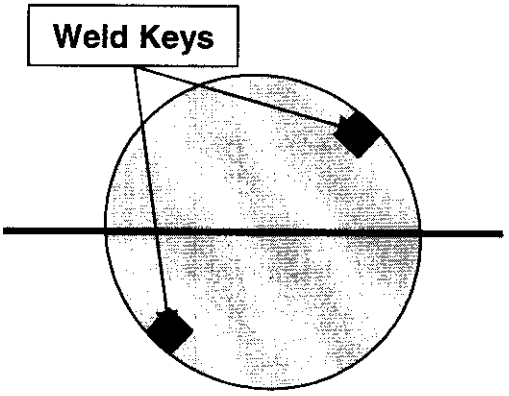

Non-Lead End

Technician(s) _____ Date 1/9/04

6.0 Q2a / Q2b Module Alignment

Q2a

XXX 6.1 Determine and record the location at which the level gauge should be mounted to the Cold Mass.

Distance from Lead End Plate: 110" inches.

T. Page — 1/20/04

Responsible Authority/Physicist — Date

6.2 Mount the Twist Measuring Fixture to the Q2a Cold Mass at the assigned position.

Technician(s) — 1/10/04 Date

6.3 Mount the Precision V Block to the top of the Twist Measuring Fixture.

Technician(s) — 1/10/04 Date

6.4 Place the Mini Level on the top surface of the V Block.

Technician(s) — 1/10/04 Date

6.5 Rotate the Q2a Cold Mass until the Mini Level reads Horizontal 0.00 mm/m (+/- 0.05 mm/m).

Note(s):

Mini Level should be "zeroed" at reference stand location before this operation.

Technician(s) — 1/10/04 Date

Q2b

XXX 6.6 Determine and record the location at which the level gauge should be mounted to the Q2b Cold Mass.

Distance from Lead End Plate: 40" inches.

Responsible Authority/Physicist — Date 1/20/04

6.7 Mount the Twist Measuring Fixture to the Q2b Cold Mass at the assigned position.

Technician(s) — Date 1/10/04

6.8 Mount the Precision V Block to the top of the Twist Measuring Fixture.

Technician(s) — Date 1/10/04

6.9 Place the Mini Level on the top surface of the V Block.

Technician(s) — Date 1/10/04

6.10 Rotate the Q2b Cold Mass until the Mini Level reads Horizontal 0.00mm/m (+/- 0.05 mm/m).

Note(s):

Mini Level should be "zeroed" at reference stand location before this operation.

Technician(s) — Date 1/10/04

6.11 Perform a Stretched Wire Verification Measurement.

Technician(s) — Date 1/26/04

7.0 Bus & Instrumentation Connection and Assembly

Note(s):

Figure "7.0-A" shows the configuration of magnet and corrector bus leads in a Q2 Magnet.

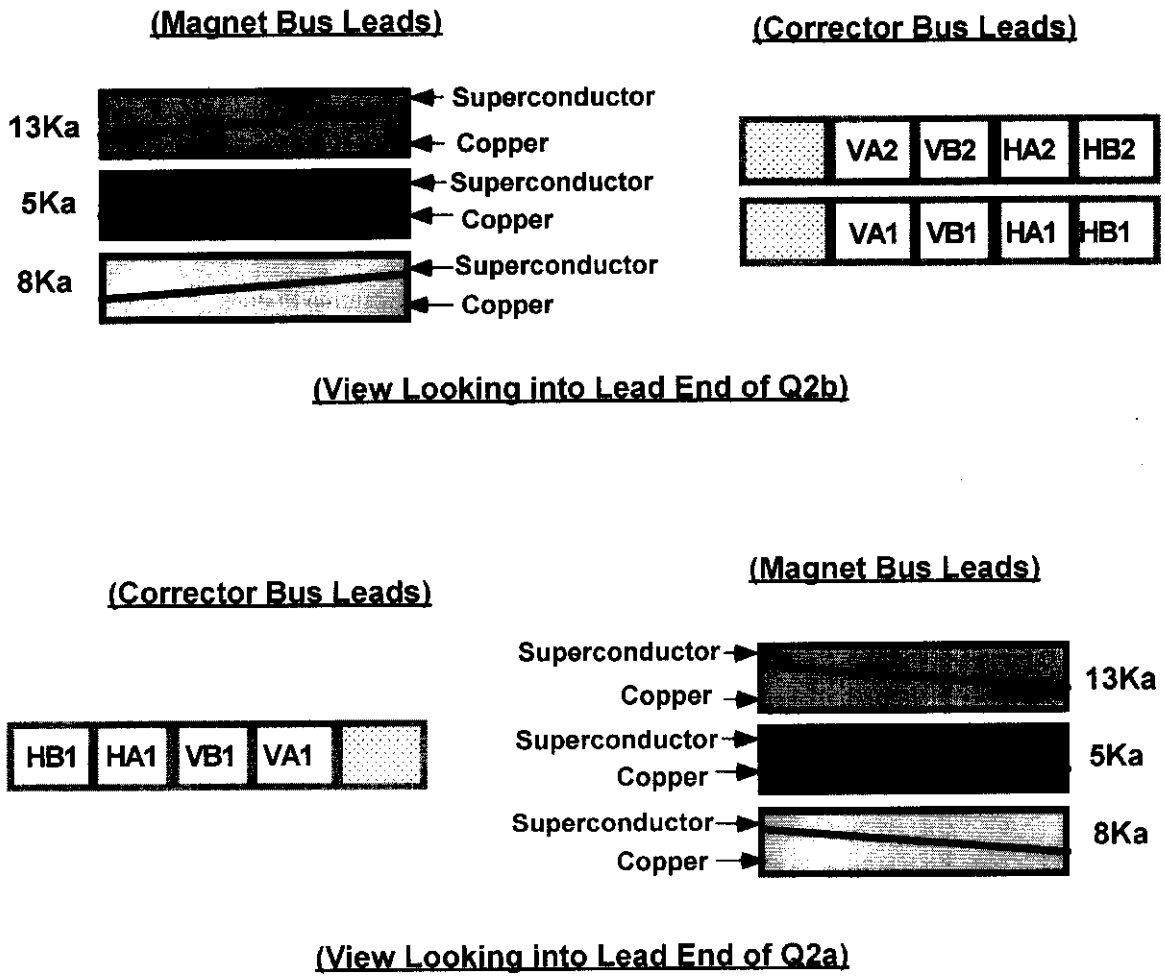

Figure 7.0-A

7.1 Slide Completed Bus Assembly (ME-369826) into Q2 as per Q2 Module Assembly (ME-369895).

Technician(s) _____ Date 1/21/04

7.2 Connect the Bus Housing Lock (MB-369870) to the Bus Assembly (ME-369826) and Q2b Return End Plate as per Q2 Module Assembly (ME-369895).

Technician(s) _____ Date 1/21/04

7.3 Connect the Bus Housing End Support (MB-369892) on the Q2a End per (ME-369895).

Technician(s) _____ Date 1/21/04

7.4 Connect the Bus Housing End Support (MB-369892) on the Q2b End per (ME-369895).

Technician(s) _____ Date 1/21/04

7.5 Set up the Power Leads for splicing. Create a ¾" space behind the Kevlar wrapped Leads to allow for Thermal Contraction differences between the bus and Cold Masses

Technician(s) _____ Date 1/21/04

7.6 Solder 13kA bus to Q2a Quadrant 4 lead as per Q2 Module Assembly (ME-369895) per LHC Cable Splice Joint Procedure (ES-369950).

Technician(s) _____ Date 1/21/04

7.7 Cut Q2a Quadrant 4 Lead at end of splice per Drawing (ME-369895).

Technician(s) _____ Date 1/21/04

7.8 Insulate splice area with ¾ overlap, .001 x 3/8 wide kapton.

Technician(s) _____ Date 1/21/04

7.9 Attach the Q2a Bus Housing Extension (MD-369872) to Q2a Lead as per Q2 Module Assembly (ME-369895).

Technician(s) _____ Date 1/21/04

7.10 Attach the Q2a Bus Housing Extension Base (MC-369873) to Q2a Lead as per Q2 Module Assembly (ME-369895).

Technician(s) _____ Date 1/22/04

7.11 Attach the Q2a Bus Housing Extension Cover (MD-369874) to Q2a Lead as per Q2 Module Assembly (ME-369895).

Technician(s) _____ Date 1/22/04

7.12 Solder 13kA bus to Q2b Quadrant 4 lead as per Q2 Module Assembly (ME-369895) as per LHC Cable Splice Joint Procedure (ES-369950).

Technician(s) _____ Date 1/21/04

7.13 Cut Q2b Quadrant 4 Lead at end of splice per Drawing (ME-369895).

Technician(s) _____ Date 1/21/04

7.14 Insulate splice area with ¾ overlap, .001 x 3/8 wide kapton.

Technician(s) _____ Date 1/22/04

7.15 Attach the Q2b Bus Housing Extension (MD-369867) to Q2b Lead as per Q2 Module Assembly (ME-369895).

Technician(s) _____ Date 1/22/04

7.16 Attach the Q2b Bus Housing Extension Cover (MD-369874) to Q2b Lead as per Q2 Module Assembly (ME-369895).

Technician(s) _____ Date 1/22/04

XXX 7.17 Hipot the 5kA Lead Bus to all other components at 5 kV. Ensure that all Magnet components (*i.e. both Yokes, all Coils, Strip Heaters and 8kA Bus*) are grounded. **(Max. Leakage < 0.5μA)**

(Magnet Bus Leads)

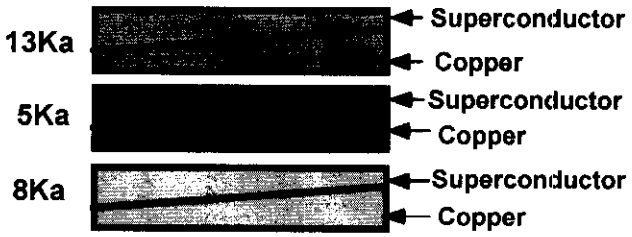

(Corrector Bus Leads)

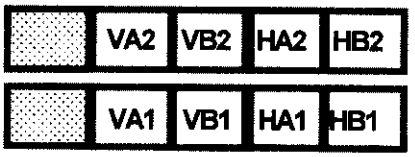

(View Looking into Q2b)

TRR# 1659

Power Lead Assembly Hipot	Leakage or Failure Voltage	Floating	Pass	Fail
5kA to all other components	>.01	RTD's and Warm-up Heaters	X	

Technician(s) _____ Date 11/23/04

Responsible Authority/Physicist _____ Date 1/23/04

PRE-ELECTRICAL TEST SET UP CHECKED 1/23/04

7.18 Prepare Q2a Lead End Instrumentation wire bundle. Wrap the Q2a Lead End instrumentation wires into Bus Cable as per (MB-369897). Wire Labels and descriptions are shown in Table 7.18 and per (MB-369897).

Note(s):

All wires in this table have been previously soldered to the Magnet except for the Cryogenic (warm-up) Heater Wires.

Q2a bundle MB-369897 (From Lead End of Q2a)				
Wire Description	**Fermi Label**	**CERN Label**	**Gauge**	
Q2a Lead Voltage Tap "a", primary	VTa1Q2a	EE1112	26	Twist all three together
Q2a Lead Voltage Tap "b", primary	VTb1Q2a	EE1312	26	
Q2a Center Voltage Tap "c", primary	VTc1Q2a	EE1212	26	
Q2a lead Voltage Tap "a", redundant	VTa2Q2a	EE1122	26	Twist all three together
Q2a Lead Voltage Tap "b", redundant	VTb2Q2a	EE1322	26	
Q2a Center Voltage Tap "c", redundant	VTc2Q2a	EE1222	26	
1/4 coil tap (Q1 inner - Q3 outer)	VTdQ2a	EMPTY	26	
1/4 coil tap (Q2 inner - Q4 outer)	VTeQ2a	EMPTY	26	
Q2A Cryogenic Heater lead end - wire toward cold mass end plate (CERN #1 I+)	W1aQ2A	EH8312+	20	Install and Twist Together
Q2A Cryogenic Heater lead end - wire toward cold mass mag center (CERN #1 I-)	W2aQ2A	EH8312-	20	
Q2a Protection (Strip) Heater, 1-4 & 2-3 circuit (FNAL lead A+) (CERN lead #1+)	H1aQ2a	YT1112+	20	Twist together
Q2a Protection (Strip) Heater, 1-4 & 2-3 circuit (FNAL lead A-) (CERN lead #1-)	H2aQ2a	YT1112-	20	
Q2a Protection (Strip) Heater, 1-2 & 3-4 circuit (FNAL lead B+) (CERN lead #2+)	H1bQ2a	YT1122+	20	Twist together
Q2a Protection (Strip) Heater, 1-2 & 3-4 circuit (FNAL lead B-) (CERN lead #2-)	H2bQ2a	YT1122-	20	

Table 7.18

Technician(s)

Date 1/24/04

7.19 Pull wire bundle from Q2a through entire Q2 Assembly and mark the Q2b Lead End Plate position on bundle. **(See Note below)** Leave sufficient slack in cable to allow for differential thermal contraction.

Note(s):

When Bus Assembly (ME-369896) is inserted into the Q2 in step 7.27, the mark from step 7.24 should be located 1 inch from the Q2b end of the aluminum channel.

Technician(s) _____ Date 1/24/04

XXX 7.20 Verify that there is sufficient slack in cable to allow for differential thermal contraction.

Responsible Authority/Physicist _____ Date 1/24/04

7.21 Remove Q2a bundle from Q2 Assembly.

Technician(s) _____ Date 1/24/04

7.22 Slide Instrumentation Bus Assembly (ME-369896) into the proper Q2 Port as per Q2 Module Assembly (ME-369895). As instrumentation Bus Assembly is being inserted, feed Bus Cable (MA-369897) from Lead End of Q2a (4 strip heater wires, 8 voltage tap wires and 2 warm-up heater wires) into bus channel, wrapping entire channel intermittently with glass tape and Kevlar string as shown in drawing (ME-369896). Attach Instrumentation Bus Channel Lock (MB-369937) to Q2b Non Lead End as per Q2 Module Assembly (ME-369895, page 4 of 4).

Refer to Figures 7.22-A, 7.22-B, 7.22-C, 7.22-D and Drawing (ME-369895) to see the positions at which all wires are attached to the End Plates.

Technician(s) _____ Date 1/24/04

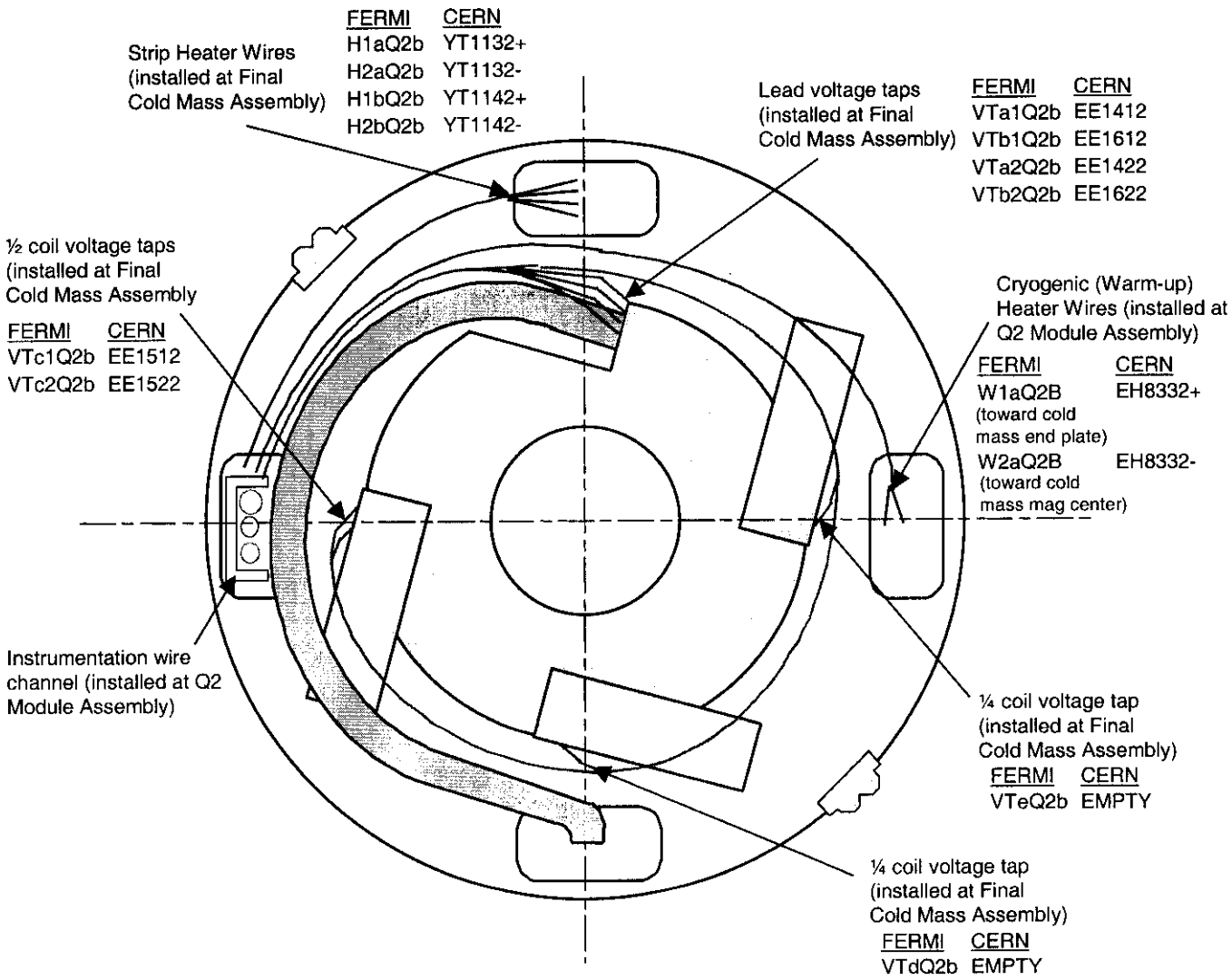

Looking at Lead End of Q2b

Figure 7.22-A

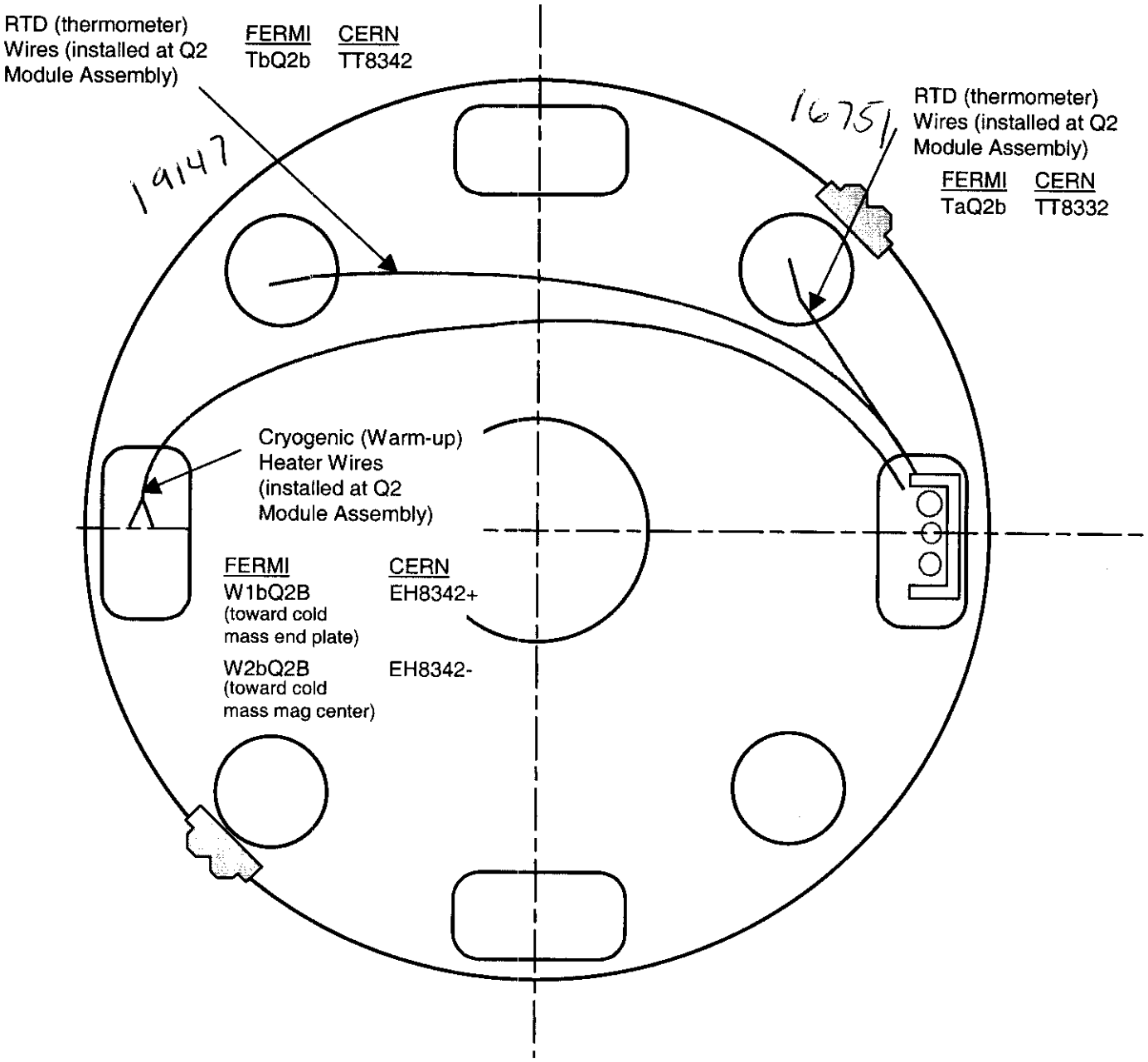

Looking at Non-lead End of Q2b

Figure 7.22-B

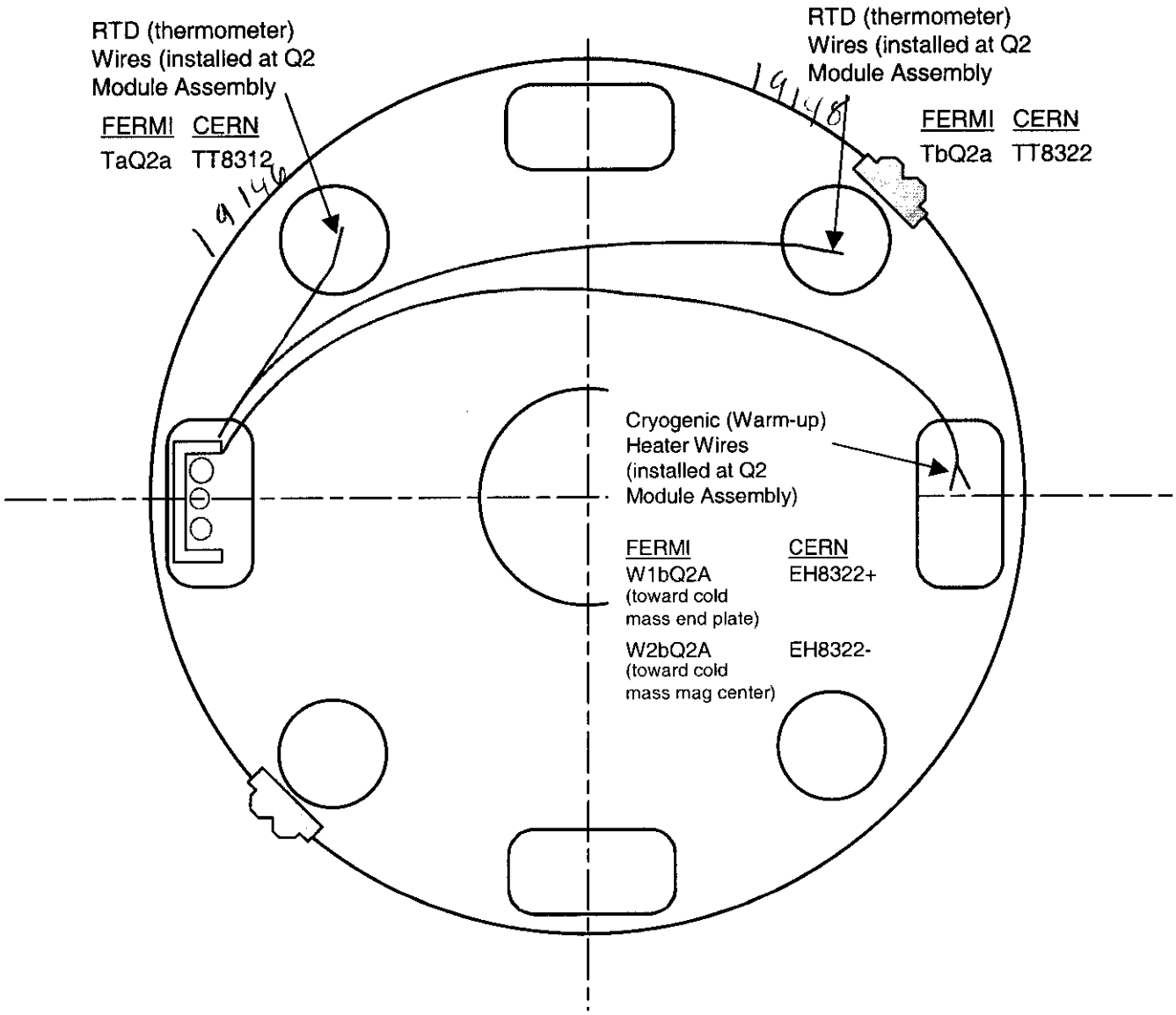

Looking at Non-lead End of Q2a

Figure 7.22-C

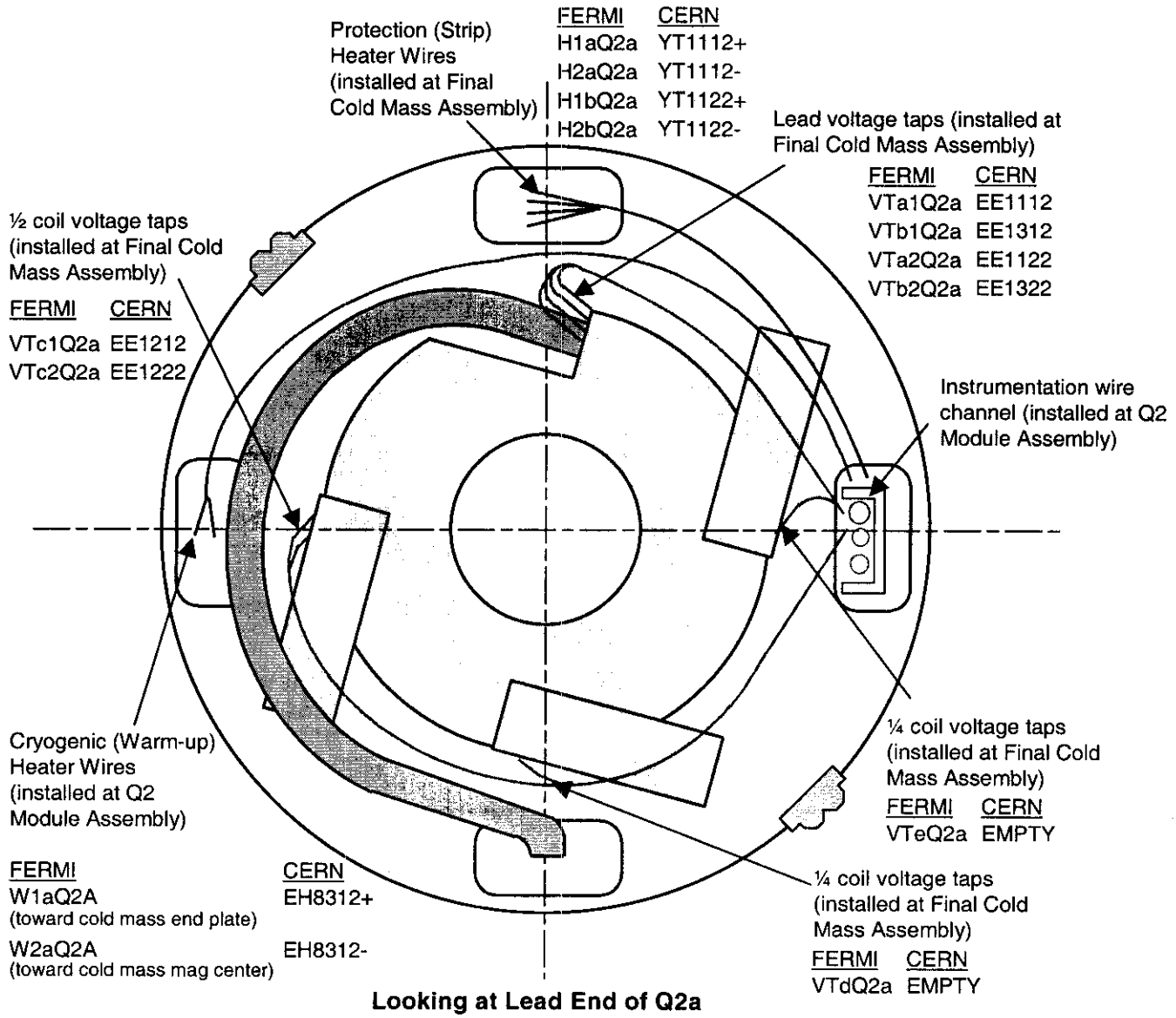

Looking at Lead End of Q2a

Figure 7.22-D

7.23 Install Warm-up Heaters (ME-369834) to the Non-Lead Ends of Q2a and Q2b as per Q2 Module Assembly (ME-369895).

7.23.1 Install Warm-up Heaters (MA-369834) onto the Warm-up Heater Base Plate (MA-369829).

7.23.2 Solder wires (MA-369833) to the Warm-up Heaters as per (ME-369895).

7.23.3 Install Warm-up Heater Base Plates (MA-369829) by bolting into holes in End Plate. (Check each box as Heater is installed.)

Warm-up Heater #1 ☑

Warm-up Heater #2 ☑

Warm-up Heater #3 ☑

Warm-up Heater #4 ☑

Technician(s) _____ Date 1/26/04

7.24 Install RTD's as per Q2 Module Assembly (ME-369895). Record Serial Numbers of each RTD in the table below. Attach Data Sheet for each RTD to traveler.

7.24.1 Attach RTD's (MA-369835) (Qty. 2) to each Return End Plate as per Q2 Module Assembly (ME-369895).

7.24.2 Solder wires (MA-369836) to RTD's as per Q2 Module Assembly (ME-369895). Individual RTD wiring is shown in Figure 7.24.2-A below.

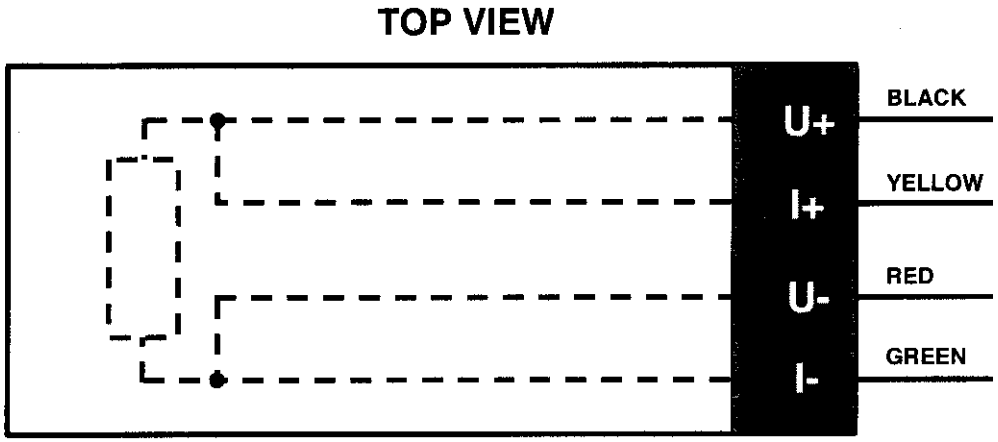

Figure 7.24.2-A

Technician(s) _____ Date 1/26/04

7.25 Measure Resistance of all RTD's and Cryogenic (warm-up) Heaters. Record the Data below.

To measure the resistance of a Thermometer (RTD):

1. Use Hewlett Packard HP3457A digital multimeter.
2. Record temperature of building within +/- 5 degrees.
3. Press line button to turn line on.
4. Connect wires as shown in Figure below.
   U+ (Black) to Sense HI
   I+ (Yellow) to Input HI
   U- (Red) to Sense LO
   I- (Green) to Input LO
5. Push blue button (function key) once.
6. Push OHMF button.
7. Verify arrow in readout is above the 4WΩ (meaning a 4 wire resistance measurement).
8. Read resistance in ohms and record in traveler.

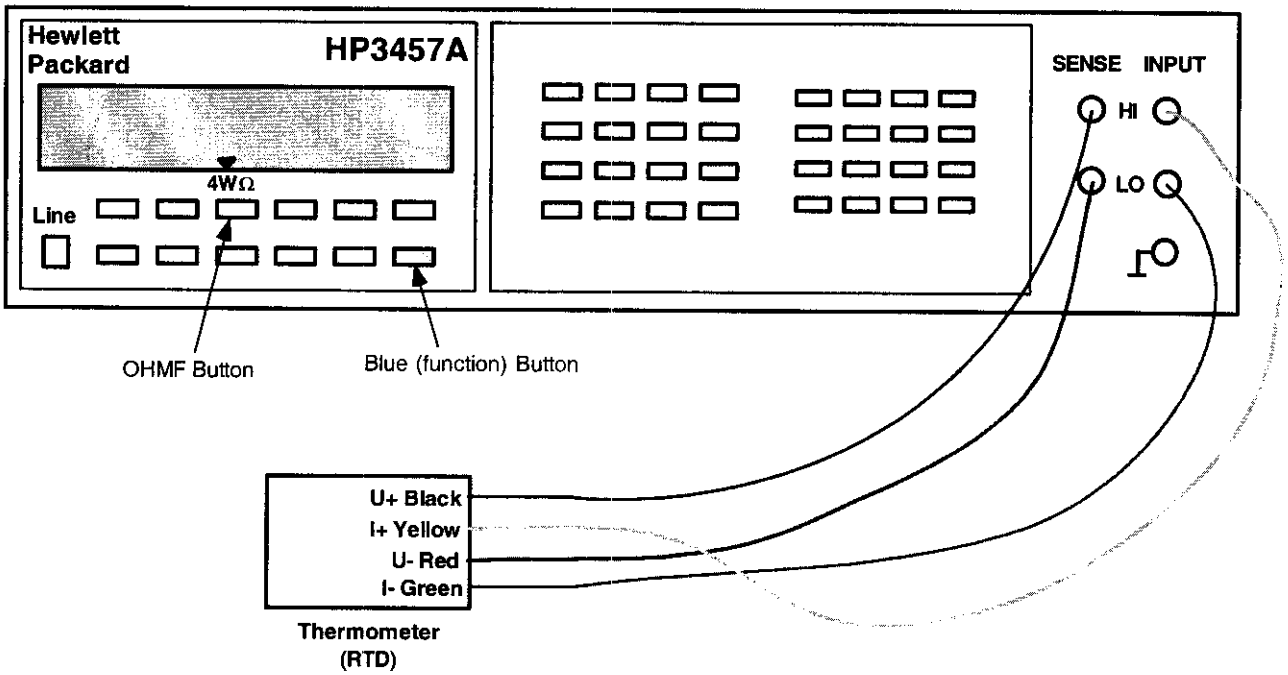

RTD's				
Temperature of Building (+/- 5°): 68°				
Serial No.	Location	Fermi	CERN	Resistance
CX-LS-X19146	Q2a Inst. Bus Side	TaQ2a	TT8312	58.458 Ω
CX-LS-X19148	Q2a Non-Bus Side	TbQ2a	TT8322	60.174 Ω
CX-LS-X16751	Q2b Inst. Bus Side	TaQ2b	TT8332	68.617 Ω
CX-LS-X19147	Q2b Non-Bus Side	TbQ2b	TT8342	61.703 Ω

To measure the resistance of a Cryogenic (warm-up) Heater

1. Use Hewlett Packard HP3457A digital multimeter.
2. Record temperature of building within +/- 5 degrees.
3. Press line button to turn line on.
4. Connect wires as shown in Figure below.
5. Push blue button (function key) once.
6. Push OHMF button.
7. Verify arrow in readout is above the 4WΩ (meaning a 4 wire resistance measurement). Note: Although this is technically a 4 wire measurement, it is effectively a 2 wire measurement, since there are only 2 wires connected to each heater.
8. Read resistance in ohms and record in traveler.

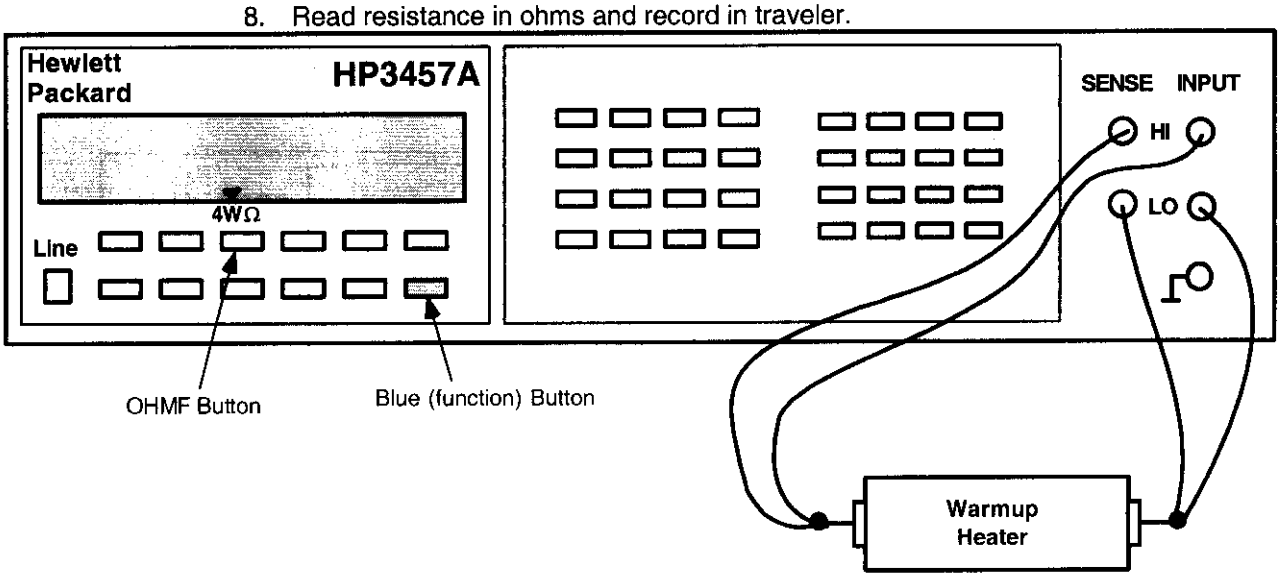

Cryogenic (warm-up) Heaters			
Temperature of Building (+/- 5°): 68°			
Location	Fermi	CERN	Resistance
Q2a Lead End	W1aQ2A	EH8312+	16.8706 Ω
	W2aQ2A	EH8312-	
Q2a Non-Lead End	W1bQ2A	EH8322+	16.5341 Ω
	W2bQ2A	EH8322-	
Q2b Lead End	W1aQ2B	EH8332+	16.1931 Ω
	W2aQ2B	EH8332-	
Q2b Non-Lead End	W1bQ2B	EH8342+	16.4447 Ω
	W2bQ2B	EH8342-	

Technician(s)

1/26/04
Date

TRR 1602 1636

7.26 Hipot Cryogenic (warm-up) Heaters (300 V) and RTD's (100 V) to ground.

Cryogenic (warm-up) Heaters			
Temperature of Building (+/- 5°): 68°			
Location	Fermi	CERN	Resistance
Q2a Lead End	W1aQ2A	EH8312+	<.01 μΩ
	W2aQ2A	EH8312-	
Q2a Non-Lead End	W1bQ2A	EH8322+	<.01 Ω
	W2bQ2A	EH8322-	
Q2b Lead End	W1aQ2B	EH8332+	<.01 Ω
	W2aQ2B	EH8332-	
Q2b Non-Lead End	W1bQ2B	EH8342+	<.01 Ω
	W2bQ2B	EH8342-	

RTD's				
Temperature of Building (+/- 5°): 68°				
Serial No.	Location	Fermi	CERN	Resistance
CX-LS-X19146	Q2a Inst. Bus Side	TaQ2a	TT8312	<.01 μΩ
CX-LS-X19148	Q2a Non-Bus Side	TbQ2a	TT8322	<.01 μΩ
CX-LS-X16751	Q2b Inst. Bus Side	TaQ2b	TT8332	<.01 μΩ
CX-LS-X19147	Q2b Non-Bus Side	TbQ2b	TT8342	<.01 μΩ

Technician(s) Date 1/26/04

7.27 Install the mounts for the MCBX Corrector Magnet (MD-390312) on the Return End of Q2a as per Q2 Cold Mass Welded Assembly (ME-390309).

Technician(s) Date 1/26/04

7.28 Place the MCBX Corrector Magnet (MD-390312) in the Corrector Magnet Mounting Tooling, between Q2a and Q2b. The Flange end of the MCBX should face the Return End Plate of Q2a.

Technician(s) Date 1/27/04

7.29 Attach the MCBX Corrector Magnet Alignment Tooling (ME-390390) to the MCBX Corrector Magnet (MD-390312). Align the Scribe Lines on the Corrector Magnet (MD-390312) with those on the tooling.

Technician(s) _____ Date 1/27/04

7.30 Mount the Mini Level to the top of the MCBX Corrector Magnet Alignment Tooling.

Note(s):
Mini Level should be "zeroed" at reference stand location before this operation.

Technician(s) _____ Date 1/27/04

7.31 Rotate the MCBX Corrector Magnet (MD-390312) such that the Mini Level is Horizontal 0.00 mm/m (+/- 0.05 mm/m).

Technician(s) _____ Date 1/27/04

7.32 Move the MCBX Corrector Magnet (MD-390312) up against the Mounting Hardware to the Q2a Magnet, and bolt the MCBX Corrector Magnet (MD-390312) to the Q2a Cold Mass as per Q2 Cold Mass Welded Assembly (ME-390309).

Technician(s) _____ Date 1/27/04

XXX 7.33 Verify Alignment of MCBX Corrector Magnet (MD-390312) as per Q2 Cold Mass Welded Assembly (ME-390309).

Responsible Authority/Physicist _____ Date 1/27/04

7.34 Connect the MCBX Corrector Magnet (MD-390312) Bus wires from Bus Assembly (ME-369826) to the MCBX Corrector Magnet (MD-390312) as per Q2 Module Assembly (ME-369895).

Technician(s) _____ Date 1/28/03

7.35 Solder MCBX Corrector Magnet Voltage Tap Wires (MA-369832) as per Q2 Module Assembly (ME-369895).

Technician(s) _____ Date 1/28/03

8.0 Electrical Inspection

8.1 Perform an electrical inspection on each of the Individual Quadrants and the Cold Masses. Refer to the Valhalla and Leader Free Standing Coil Measurement Procedure (ES-292306).

DR# HGQP443

To measure the resistance of a bussed Q2:

1. Use Valhalla Scientific 4300B digital micro-ohmmeter.
2. Set Test Current to 1 amp.
3. Set Scale to 2V full scale.
4. Turn temperature compensation on.
5. Turn test current off.
6. Put jumper between Q2a Q3 inner power lead and 5 KA bus as shown in figure.
7. Connect I_{HI} to the 5KA bus (Q2a Q3 inner power lead) as shown in figure.
8. Connect I_{LO} to the Q2b Q3 inner power lead as shown in figure.
9. Turn test current on.
10. Connect V_{HI} and V_{LO} buttons to voltage taps as shown below.
11. Read resistance and record in traveler.

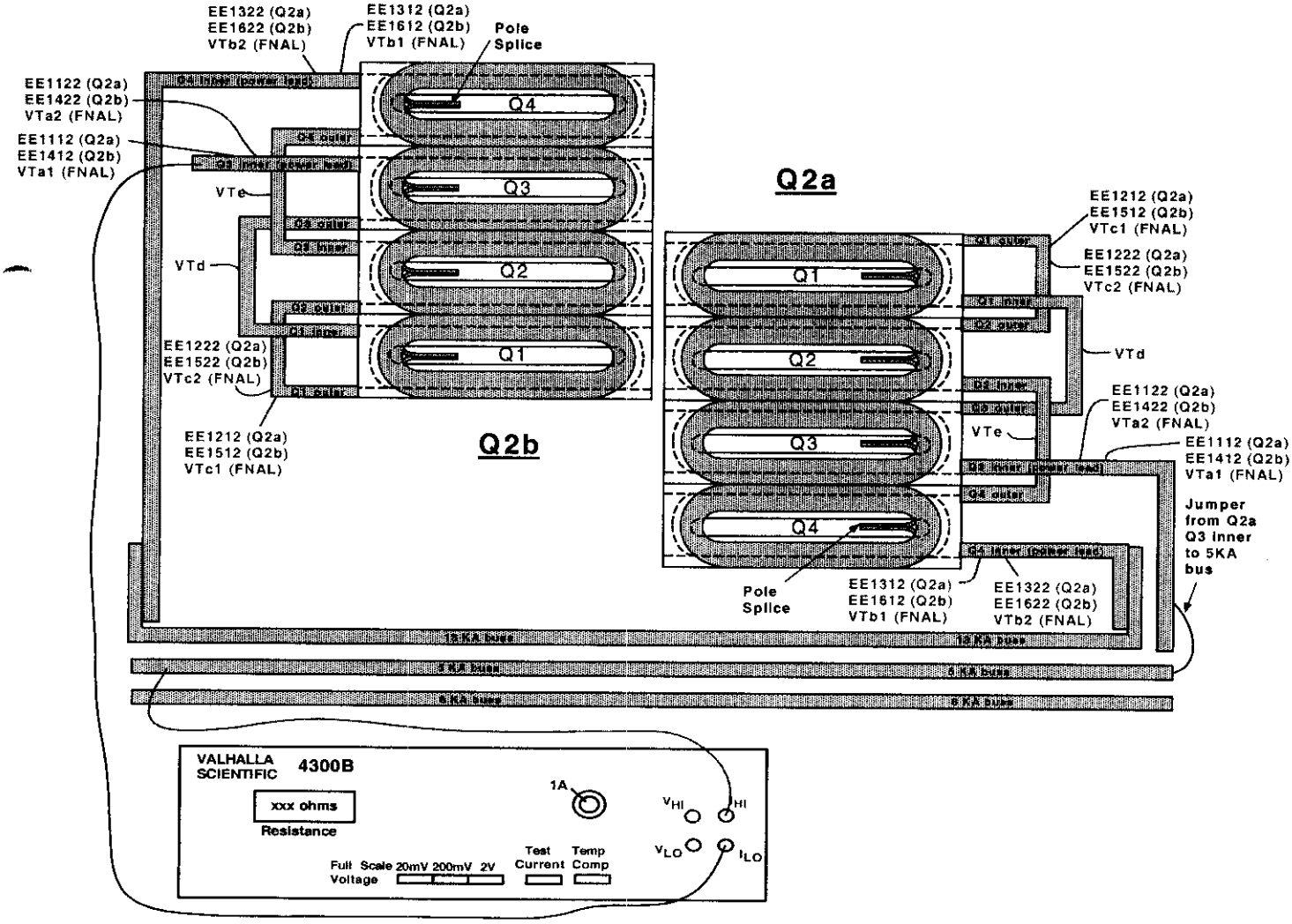

(Q2a) Resistance				Nominal ~ 560 to 585 mΩ
Voltage Tap Serial Numbers				Quadrant Total Resistance
Connect	Fermi	CERN	Quadrant	
V_{HI}	VTdQ2a	EMPTY	Quadrant 1	572.4 mΩ
V_{LO}	VTc1Q2a	EE1212		
V_{HI}	VTc1Q2a	EE1212	Quadrant 2	572.3 mΩ
V_{LO}	VTeQ2a	EMPTY		
V_{HI}	VTa1Q2a	EE1112	Quadrant 3	570.2 mΩ
V_{LO}	VTdQ2a	EMPTY		
V_{HI}	VTeQ2a	EMPTY	Quadrant 4	569.0 mΩ
V_{LO}	VTb1Q2a	EE1312		

V_{HI}	VTa1Q2a	EE1112	Total Cold Mass	Nominal ~ 2.305 Ω
V_{LO}	VTb1Q2a	EE1312		2.285 Ω

Technician(s) Date 1/29/04

Check resistance of Redundant Voltage Taps.

Q2a Redundant Voltage Taps			
Connect	Fermi	CERN	Resistance
V_{HI}	VTa2Q2a	EE1122	1143 mΩ
V_{LO}	VTc2Q2a	EE1222	
V_{HI}	VTc2Q2a	EE1222	1142 mΩ
V_{LO}	VTb2Q2a	EE1322	

Technician(s) Date 1/29/04

To measure Ls and Q of a Bussed Q2:

1. Use Hewlett Packard HP4284A digital LCR meter.
2. Turn line switch to on. The words "Measurement Display" should now be highlighted in the upper left corner of the display screen.
3. Use cursor buttons (shown in figure with arrows) to toggle down until "function" is highlighted near the upper left corner of the display screen.
4. Push the lowest of the five buttons to the right of display 3 times. (this button is shaded gray in the figure) The line in the display screen next to the second button down should now read "Ls-Q" and "function" near the upper left corner of the display should have the option "Ls-Q" chosen.
5. Scroll to "integer" using the cursor buttons. "Integer" will have the option "medium" chosen.
6. Press the 3rd button of five. The word "medium" should change to "long".
7. Connect H_{cur} to the 5KA bus (Q2a/Q3 inner power lead as shown in figure).
8. Connect L_{cur} to Q2b/Q3 inner power lead as shown in figure.
9. Connect H_{pot} and L_{pot} buttons to voltage taps as shown below.
10. Read Ls and Q from display and record in traveler.

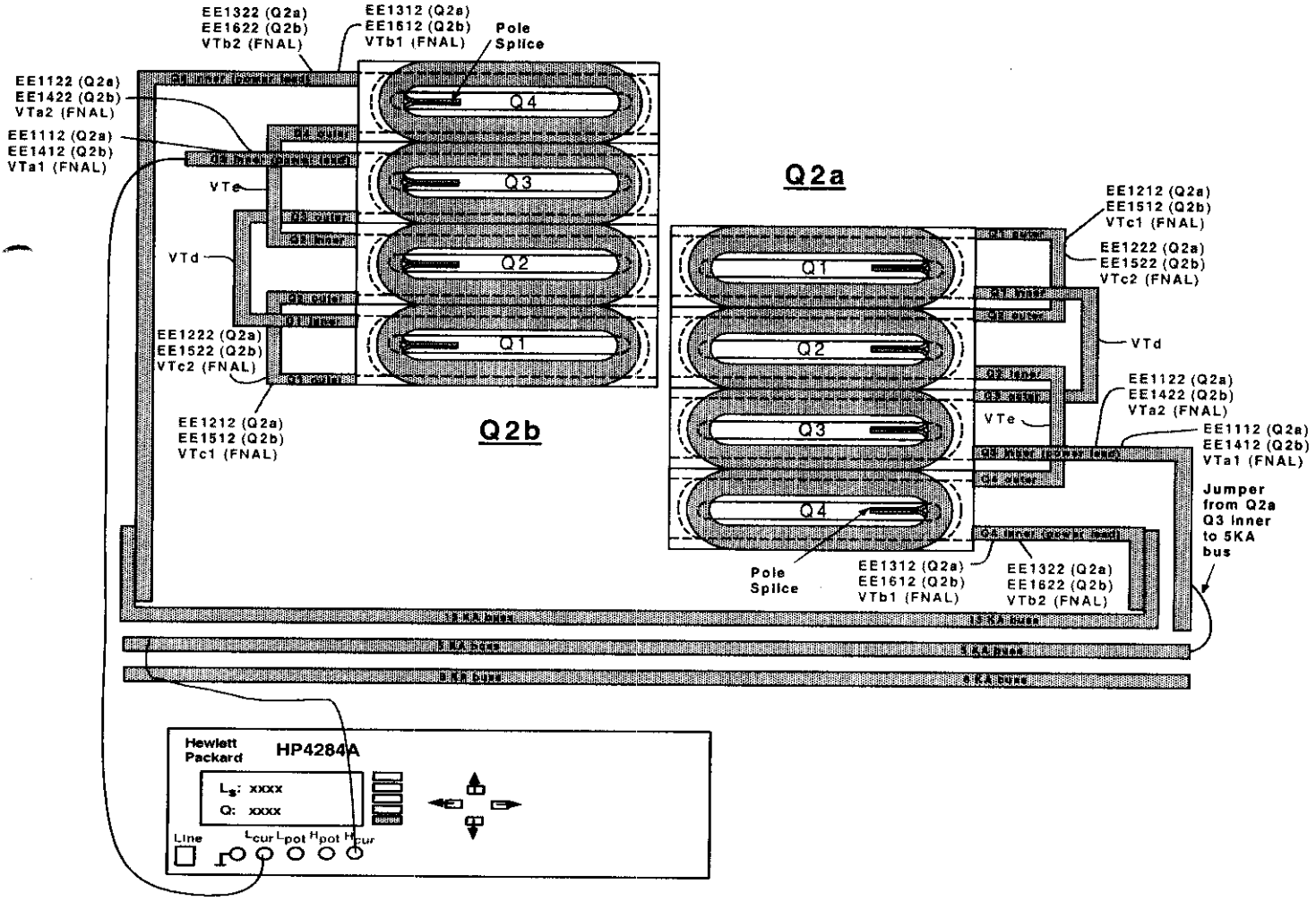

Q2A Hooked up ONLY!

(Q2a) Inductance				Nominal ~ 2.880 to 2.935 mH	
Voltage Tap Serial Numbers				Quadrant Total Inductance	
Connect	Fermi	CERN	Quadrant		
H_{POT}	VTdQ2a	EMPTY	Quadrant 1	4.1919 mH	3.3733 mH
L_{POT}	VTc1Q2a	EE1212			
H_{POT}	VTc1Q2a	EE1212	Quadrant 2	3.3780 mH	3.3496 mH
L_{POT}	VTeQ2a	EMPTY			
H_{POT}	VTdQ2a	EMPTY	Quadrant 3	5.305 ~~5.285~~ mH	3.3192 mH
L_{POT}	VTa1Q2a	EE1112			
H_{POT}	VTeQ2a	EMPTY	Quadrant 4	3.2910 mH	3.3655 mH
L_{POT}	VTb1Q2a	EE1312			

H_{POT}	VTa1Q2a	EE1112	Total Cold Mass	Nominal ~ 13.3376 mH	
L_{POT}	VTb1Q2a	EE1312		12.721 mH	13.401 mH

(Q2a) Q-Factor				Nominal ~ 4.5 to 5.2	
Voltage Tap Serial Numbers				Quadrant Total Q	
Connect	Fermi	CERN	Quadrant		
H_{POT}	VTdQ2a	EMPTY	Quadrant 1	7.4	5.1
L_{POT}	VTc1Q2a	EE1212			
H_{POT}	VTc1Q2a	EE1212	Quadrant 2	7.2	5.2
L_{POT}	VTeQ2a	EMPTY			
H_{POT}	VTa1Q2a	EE1112	Quadrant 3	9.3	5.3
L_{POT}	VTdQ2a	EMPTY			
H_{POT}	VTeQ2a	EMPTY	Quadrant 4	6.0	5.1
L_{POT}	VTb1Q2a	EE1312			

H_{POT}	VTa1Q2a	EE1112	Total Cold Mass	Nominal ~ 5.036	
L_{POT}	VTb1Q2a	EE1312		6.3	5.2

Technician(s) _____ Date 1/29/04

S. Gouds
1/30/04

4284A

	L	Q
Q1	-144,534	.20
Q2	-150,984	.20
Q3	-137,317	.19
Q4	-147,987	.20
TOTAL	-271,150	.38

OLD METER!

To measure the resistance of a bussed Q2:

1. Use Valhalla Scientific 4300B digital micro-ohmmeter.
2. Set Test Current to 1 amp.
3. Set Scale to 2V full scale.
4. Turn temperature compensation on.
5. Turn test current off.
6. Put jumper between Q2a Q3 inner power lead and 5 KA bus as shown in figure.
7. Connect I_{HI} to the 5KA bus (Q2a Q3 inner power lead) as shown in figure.
8. Connect I_{LO} to the Q2b Q3 inner power lead as shown in figure.
9. Turn test current on.
10. Connect V_{HI} and V_{LO} buttons to voltage taps as shown below.
11. Read resistance and record in traveler.

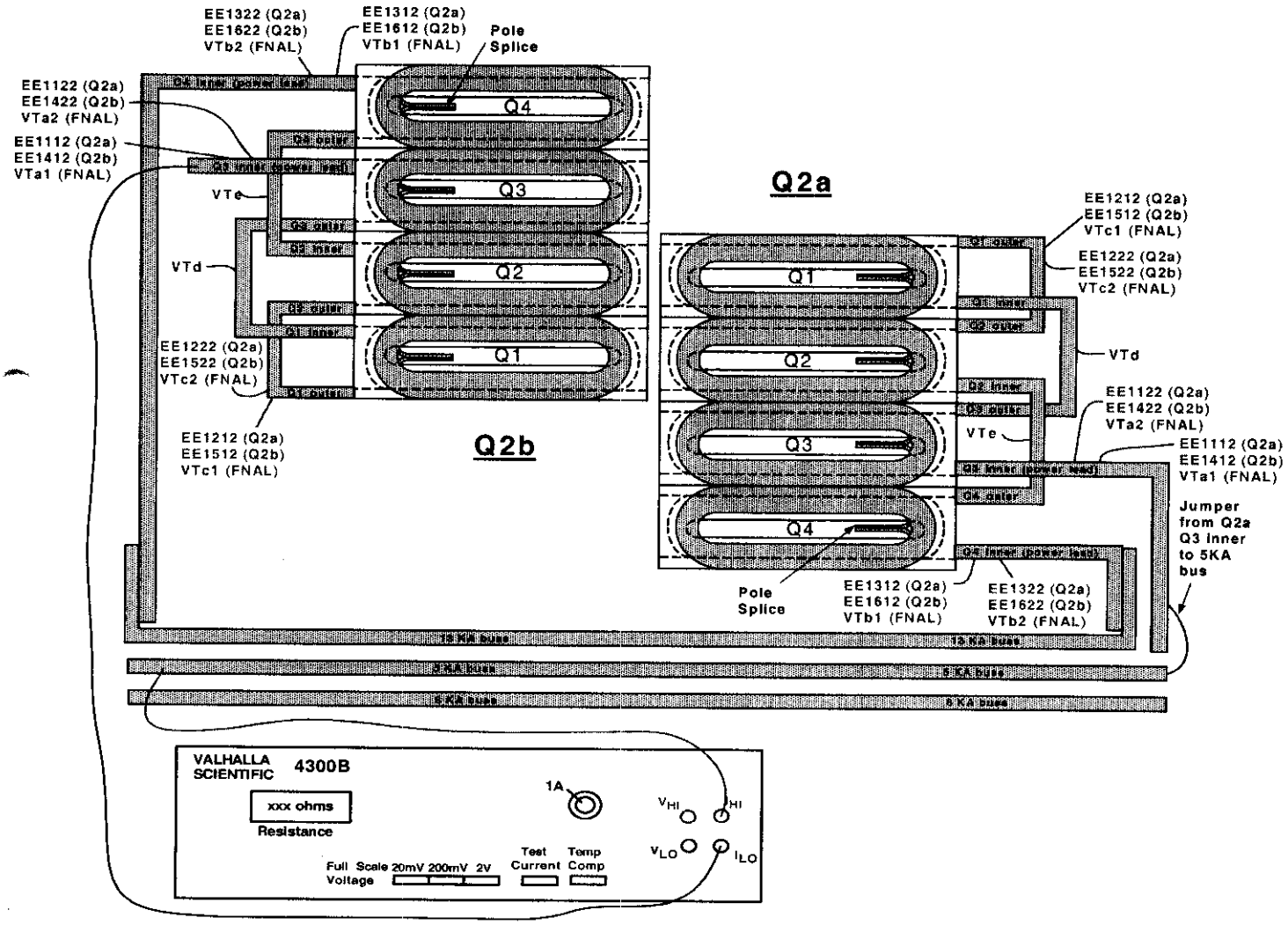

(Q2b) Resistance				Nominal ~ 560 to 585 mΩ
Voltage Tap Serial Numbers				Quadrant Total Resistance
Connect	Fermi	CERN	Quadrant	
V_{HI}	VTc1Q2b	EE1512	Quadrant 1	579 mΩ
V_{LO}	VTdQ2b	EMPTY		
V_{HI}	VTeQ2b	EMPTY	Quadrant 2	571.7 mΩ
V_{LO}	VTc1Q2b	EE1512		
V_{HI}	VTdQ2b	EMPTY	Quadrant 3	571.6 mΩ
V_{LO}	VTa1Q2b	EE1412		
V_{HI}	VTb1Q2b	EE1612	Quadrant 4	572.0 mΩ
V_{LO}	VTeQ2b	EMPTY		

V_{HI}	VTb1Q2b	EE1612	Total Cold Mass	Nominal ~ 2.305 Ω
V_{LO}	VTa1Q2b	EE1412		2.287 Ω

Technician(s) _____ Date 1/29/04

Check the resistance of the Redundant Voltage Taps.

Q2b Redundant Voltage Taps			
Connect	Fermi	CERN	Resistance
V_{HI}	VTc2Q2b	EE1522	1144 mΩ
V_{LO}	VTa2Q2b	EE1422	
V_{HI}	VTb2Q2b	EE1622	1144 mΩ
V_{LO}	VTc2Q2b	EE1522	

Technician(s) _____ Date 1/29/04

To measure Ls and Q of a Bussed Q2:

1. Use Hewlett Packard HP4284A digital LCR meter.
2. Turn line switch to on. The words "Measurement Display" should now be highlighted in the upper left corner of the display screen.
3. Use cursor buttons (shown in figure with arrows) to toggle down until "function" is highlighted near the upper left corner of the display screen.
4. Push the lowest of the five buttons to the right of display 3 times. (this button is shaded gray in the figure) The line in the display screen next to the second button down should now read "Ls-Q" and "function" near the upper left corner of the display should have the option "Ls-Q" chosen.
5. Scroll to "integer" using the cursor buttons. "Integer" will have the option "medium" chosen.
6. Press the 3rd button of five. The word "medium" should change to "long".
7. Connect H_{cur} to the 5KA bus (Q2a/Q3 inner power lead as shown in figure).
8. Connect L_{cur} to Q2b/Q3 inner power lead as shown in figure.
9. Connect H_{pot} and L_{pot} buttons to voltage taps as shown below.
10. Read Ls and Q from display and record in traveler.

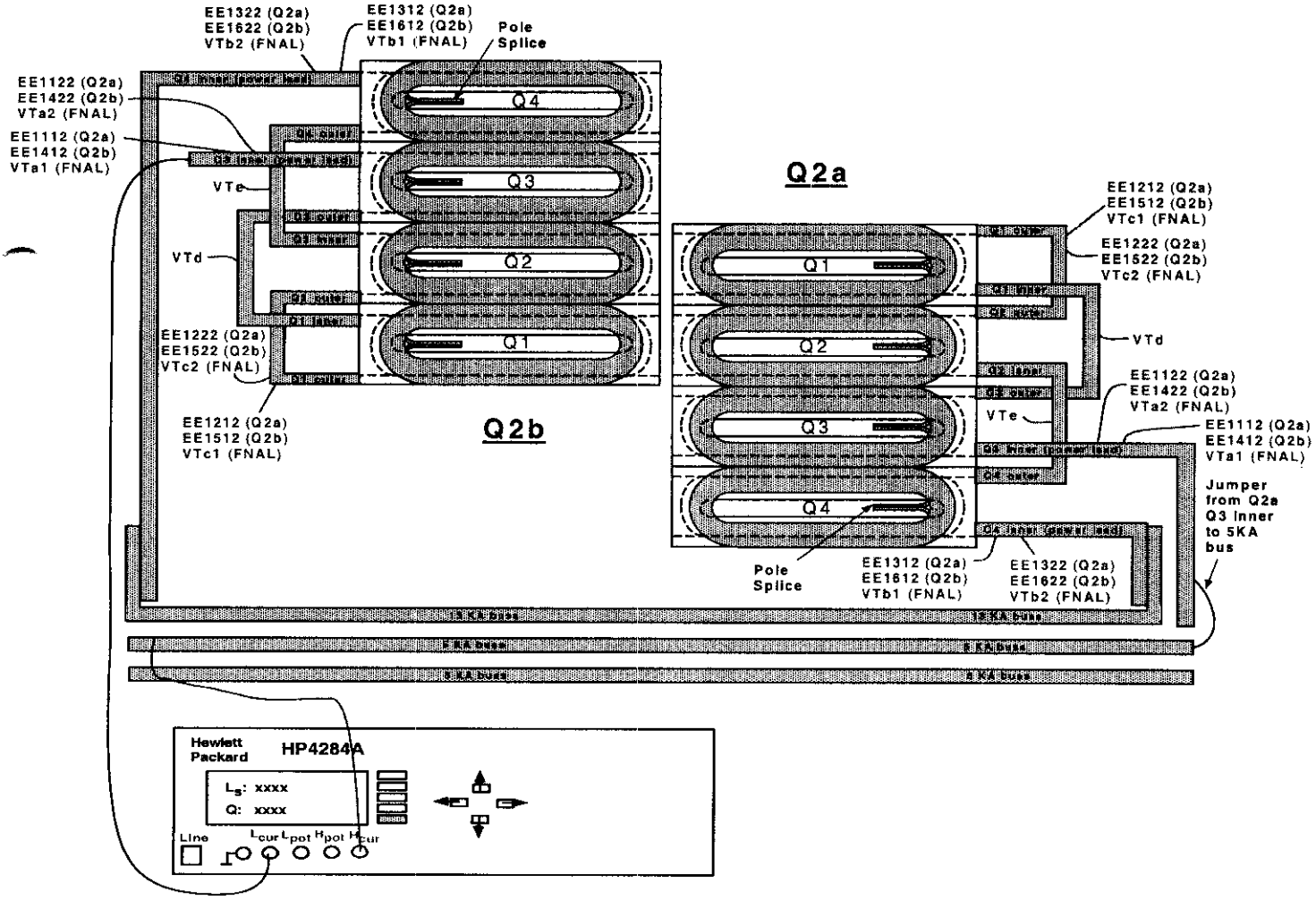

(Q2b) Inductance				Nominal ~ 2.880 to 2.935 mH
Voltage Tap Serial Numbers				Quadrant Total Inductance
Connect	Fermi	CERN	Quadrant	
H_{POT}	VTc1Q2b	EE1512	Quadrant 1	3.3606 mH
L_{POT}	VTdQ2b	EMPTY		
H_{POT}	VTeQ2b	EMPTY	Quadrant 2	3.3661 mH
L_{POT}	VTc1Q2b	EE1512		
H_{POT}	VTdQ2b	EMPTY	Quadrant 3	3.3573 mH
L_{POT}	VTa1Q2b	EE1412		
H_{POT}	VTb1Q2b	EE1612	Quadrant 4	3.3324 mH
L_{POT}	VTeQ2b	EMPTY		

H_{POT}	VTb1Q2b	EE1612	Total Cold Mass	Nominal ~ 13.3376 mH
L_{POT}	VTa1Q2b	EE1412		13.419 mH

(Q2b) Q-Factor				Nominal ~ 4.5 to 5.2
Voltage Tap Serial Numbers				Quadrant Total Q
Connect	Fermi	CERN	Quadrant	
H_{POT}	VTc1Q2b	EE1512	Quadrant 1	5.2
L_{POT}	VTdQ2b	EMPTY		
H_{POT}	VTeQ2b	EMPTY	Quadrant 2	5.2
L_{POT}	VTc1Q2b	EE1512		
H_{POT}	VTdQ2b	EMPTY	Quadrant 3	5.1
L_{POT}	VTa1Q2b	EE1412		
H_{POT}	VTb1Q2b	EE1612	Quadrant 4	5.4
L_{POT}	VTeQ2b	EMPTY		

H_{POT}	VTb1Q2b	EE1612	Total Cold Mass	Nominal ~ 5.036
L_{POT}	VTa1Q2b	EE1412		5.2

Technician(s)

Date 1/29/04

To measure the resistance of a Thermometer (RTD):

1. Use Hewlett Packard HP3457A digital multimeter.
2. Record temperature of building within +/- 5 degrees.
3. Press line button to turn line on.
4. Connect wires as shown in Figure below.
   U+ (Black) to Sense HI
   I+ (Yellow) to Input HI
   U- (Red) to Sense LO
   I- (Green) to Input LO
5. Push blue button (function key) once.
6. Push OHMF button.
7. Verify arrow in readout is above the 4WΩ (meaning a 4 wire resistance measurement).
8. Read resistance in ohms and record in traveler.

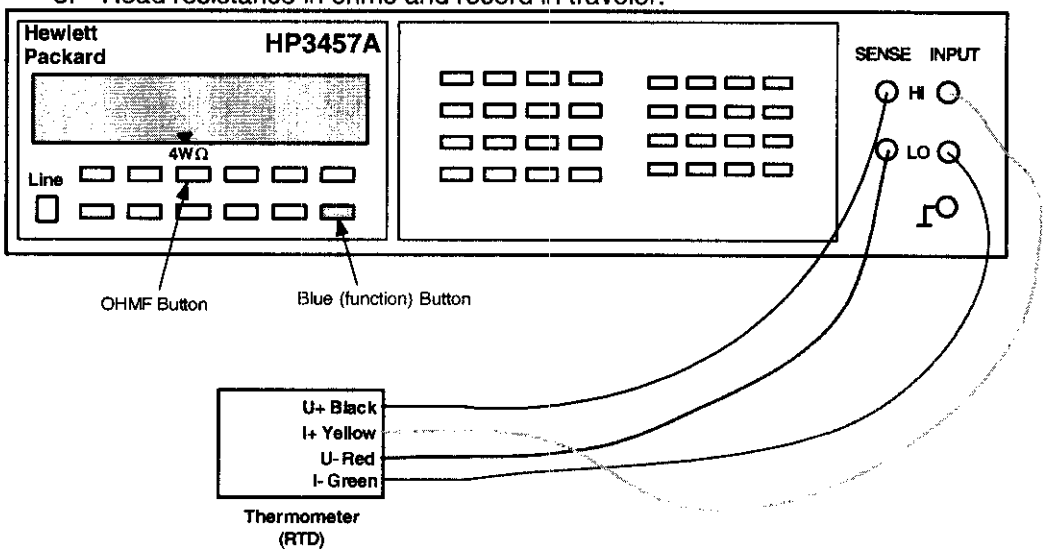

To measure the resistance of a Cryogenic (Warm-up) Heater

1. Use Hewlett Packard HP3457A digital multimeter.
2. Record temperature of building within +/- 5 degrees.
3. Press line button to turn line on.
4. Connect wires as shown in Figure below.
5. Push blue button (function key) once.
6. Push OHMF button.
7. Verify arrow in readout is above the 4WΩ (meaning a 4 wire resistance measurement).
   Note: Although this is technically a 4 wire measurement, it is effectively a 2 wire measurement, since there are only 2 wires connected to each heater.
8. Read resistance in ohms and record in traveler.

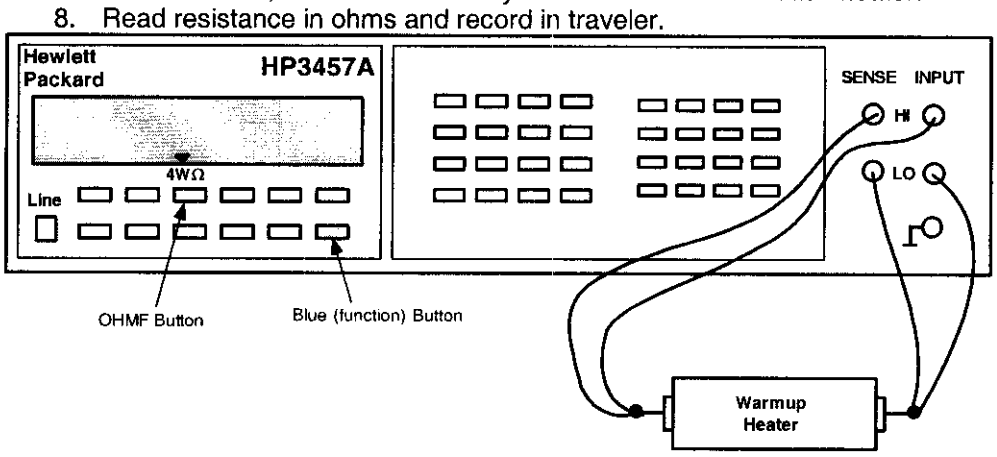

Q2a - RTD's and Cryogenic (warm-up) Heaters			
Temperature of Building (+/- 5°): 68°			
Component	**Fermi**	**CERN**	**Resistance**
Q2a RTD, primary	TaQ2a	TT8312	58.518 Ω
Q2a RTD, redundant	TbQ2a	TT8322	60.222 Ω
Q2A Cryogenic (warm-up) Heater (LE) - wire toward cold mass end plate (CERN #1 I+)	W1aQ2A	EH8312+	16.8608
Q2A Cryogenic (warm-up) Heater (LE) - wire toward cold mass mag center (CERN #1 I-)	W2aQ2A	EH8312-	Ω
Q2A Cryogenic (warm-up) Heater (Non-LE) - wire toward cold mass end plate (CERN #2 I+)	W1bQ2A	EH8322+	16.54
Q2A Cryogenic (warm-up) Heater (Non-LE) - wire toward cold mass mag center (CERN #2 I-)	W2bQ2A	EH8322-	Ω

Technician(s) _____ Date 1/29/04

Q2b - RTD's and Cryogenic (warm-up) Heaters			
Temperature of Building (+/- 5°): 68°			
Component	**Fermi**	**CERN**	**Resistance**
Q2b RTD, primary	TaQ2b	TT8332	68.642 Ω
Q2b RTD, redundant	TbQ2b	TT8342	61.719 Ω
Q2B Cryogenic (warm-up) Heater (LE) - wire toward cold mass end plate (CERN #1 I+)	W1aQ2B	EH8332+	16.108
Q2B Cryogenic (warm-up) Heater (LE) - wire toward cold mass mag center (CERN #1 I-)	W2aQ2B	EH8332-	Ω
Q2B Cryogenic (warm-up) Heater (Non-LE) - wire toward cold mass end plate (CERN #2 I+)	W1bQ2B	EH8342+	16.494
Q2B Cryogenic (warm-up) Heater (Non-LE) - wire toward cold mass mag center (CERN #2 I-)	W2bQ2B	EH8342-	Ω

Technician(s) _____ Date 1/29/04

Using the Hewlett Packard HP3457A digital multimeter, measure the Strip Heater Resistance for Q2a and Q2b.

Q2a Strip Heater Resistance				
Fermi	CERN	Description	Limit	Resistance
H1aQ2a	YT1112+	Circuit A	18.20 to 21 Ω	18.7504 Ω
H2aQ2a	YT1112-			
H1bQ2a	YT1122+	Circuit B	18.20 to 21 Ω	18.5945 Ω
H2bQ2a	YT1122-			

Technician(s) _____ Date 1/29/04

Q2b Strip Heater Resistance				
Fermi	CERN	Description	Limit	Resistance
H1aQ2b	YT1132+	Circuit A	18.20 to 21 Ω	19.222 Ω
H2aQ2b	YT1132-			
H1bQ2b	YT1142+	Circuit B	18.20 to 21 Ω	19.2791 Ω
H2bQ2b	YT1142-			

Technician(s) _____ Date 1/29/04

8.2 Using the HP3457A, connect power thru the connector Power Leads (HA2 and HB2 to measure Q2-H2 or VA2 and VB2 to measure Q2-V2). Connect the Sense Leads as shown in table below and record resistance.

(Magnet Bus Leads)

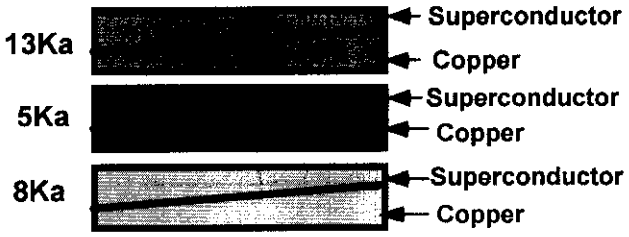

(Corrector Bus Leads)

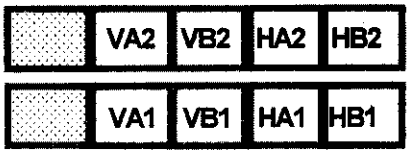

(View Looking into Q2b)

MCBX Corrector Coil Taps			
Component	**FermiLab Label**	**CERN Label**	**Resistance**
Q2-H2	**VTH2**	**EE8122**	.0675 Ω
	HA2	**N/A**	
Q2-V2	**VTV2**	**EE8112**	.0631 Ω
	VA2	**N/A**	

Technician(s) Date 1/30/04

XXX 8.3 Hipot according to table below. Hipot to 5kV. Maximum leakage is 3μA.

Hipot Heaters to Coil and Ground.

High Potential	Grounded	Floating	Leakage
All Strip Heaters	Coils, Yoke, Q1 Instrumentation Bus, Lead and Corrector Coil Busses, RTD's and Warm-up Heaters	Nothing	1.341 nA

Hipot Coil to Heaters and Ground.

High Potential	Grounded	Floating	Leakage
All Coils	Strip Heaters, Yoke, Q1 Instrumentation Bus, 8kA and 5kA Lead Busses and Corrector Coil Busses, RTD's and Warm-up Heaters	Nothing	2.30 nA

Technician(s) Date 1/30/04

Responsible Authority/Physicist Date 1/30/04

8.4 Check Q1 Instrumentation Bus Wires for Continuity.

Module	Pin	Fermi	CERN	KEK	Description	Done
M2	1	VTa1Q1	EE1111	a1	Q1 Lead Voltage Tap "a", primary	✓
M2	2	VTa2Q1	EE1121	a2	Q1 Lead Voltage Tap "a", redundant	✓
M2	3	VTc1Q1	EE1211	c1	Q1 Center Voltage Tap "c", primary	✓
M2	4	VTc2Q1	EE1221	c2	Q1 Center Voltage Tap "c", redundant	✓
M2	5	VTb1Q1	EE1311	b1	Q1 Lead Voltage Tap "b", primary	✓
M3	5	VTb2Q1	EE1321	b2	Q1 Lead Voltage Tap "b", redundant	✓
M5	1	VTH1	EE8121		Corrector voltage tap Q1-H1 (skew dipole) (on MCBX, MCBXH, A+ lead)	✓
M5	2	VTV1	EE8111		Corrector voltage tap Q1-V1 (normal dipole) (on MCBX, MCBXV A+ lead)	✓
M7	1	W1aQ1	EH8311+		Q1 Cryogenic Heater lead end - wire at top (CERN #1 I+)	✓
M7	2	W2aQ1	EH8311-		Q1 Cryogenic Heater lead end - wire at bottom (CERN #1 I-)	✓
M7	3	W1bQ1	EH8321+		Q1 Cryogenic Heater non-lead end - wire at top (CERN #2 I+)	✓
M7	4	W2bQ1	EH8321-		Q1 Cryogenic Heater non-lead end - wire at bottom (CERN #2 I-)	✓
M9	1	H1aQ1	YT1111+	HA1	Q1 Protection (Strip) Heater, ("a" circuit) (CERN lead #1+)	✓
M9	3	H2aQ1	YT1111-	HA2	Q1Protection (Strip) Heater, ("a" circuit) (CERN lead #1-)	✓
M9	5	H1bQ1	YT1121+	HB1	Q1 Protection (Strip) Heater, ("b" circuit) (CERN lead #2+)	✓
M10	4	H2bQ1	YT1121-	HB2	Q1 Protection (Strip) Heater, ("b" circuit) (CERN lead #2-)	✓
M12	1	TaQ1_I+	TT8311 I+		Q1 RTD, primary Wire color: Yellow	✓
M12	2	TaQ1_I-	TT8311 I-		Q1 RTD, primary Wire color: Green	✓
M12	3	TaQ1_V+	TT8311 U+		Q1 RTD, primary Wire color: Black	✓
M12	4	TaQ1_V-	TT8311 U-		Q1 RTD, primary Wire color: Red	✓
M12	5	TbQ1_I+	TT8321 I+		Q1 RTD, primary Wire color: Yellow	✓
M12	6	TbQ1_I-	TT8321 I-		Q1 RTD, primary Wire color: Green	✓
M12	11	TbQ1_V+	TT8321 U+		Q1 RTD, primary Wire color: Black	✓
M12	10	TbQ1_V-	TT8321 U-		Q1 RTD, primary Wire color: Red	✓

Technician(s)

Date 1/30/04

9.0 Dome Setup

DR# HGQ-0445

9.1 Attach IP End Dome (MD-390197) (Q2a) to the End Dome Positioning Fixture (MD-369776).

Technician(s) _____ Date 1/30/04

9.2 Align IP End Dome (MD-390197) as shown in Q2 Cold Mass Welded Assembly (MB-390309).

Technician(s) _____ Date 1/30/04

9.3 Level the IP End Dome (MD-390197) using the Ball Socket (MD-369777) and the Mini Level.

Technician(s) _____ Date 1/30/04

9.4 Feed the Electrical wires/Bus through the proper ports as the Dome is brought into position against the End Plate. Ensure that no damage to wires has occurred during insertion.

Technician(s) _____ Date 1/30/04

9.5 Mark the IP End Dome (MD-390197) and the End Plate with a Horizontal Witness Line. This Step will be used in Step 11.0 to reposition the Domes prior to Welding.

Technician(s) _____ Date 1/30/04

9.6 Remove the IP End Dome (MD-390197) from the Tooling.

Technician(s) _____ Date 1/31/04

9.7 Attach Non-IP End Dome (MD-390253) (Q2b) to the End Dome Positioning Fixture (MD-369776).

Technician(s) _____ Date 1/31/04

9.8 Align Non-IP End Dome (MD-390253) as shown in Q2 Cold Mass Welded Assembly (ME-390309).

Technician(s) _____ Date 1/31/04

9.9 Level the Non-IP End Dome (MD-390253) using the Ball Socket (MD-369777) and the Mini Level.

Technician(s) _____ Date 1/31/04

9.10 Feed the Electrical wires/bus through the proper ports as the Non-IP End Dome (MD-390253) is brought into position against the End Plate.

Technician(s) _____ Date 1/31/04

9.11 Mark the Non-IP End Dome (MD-390253) and the End Plate with a Horizontal Witness Line. This Step will be used in Step 11.0 to reposition the Domes prior to Welding.

Technician(s) _____ Date 1/31/04

9.12 Remove the Non-IP End Dome (MD-390253) from the Tooling.

Technician(s) _____ Date 1/31/04

10.0 Beam Tube Insertion

10.1 Inspect the Beam Tube (MD-369802) for damage. Clean Beam Tube using lint free Heavy Duty Wipers (Fermi stock 1660-0150) and Isopropyl Alcohol (Fermi stock 1920-0300) as per Insulated Beam Tube Assembly for Q2a/Q2b (MD-369802).

Technician(s) _____ Date 1/31/04

XXX 10.2 Verify Alignment of Q2a, Q2b and Corrector Magnet (MD-390312) as per Q2 Cold Mass Welded Assembly (ME-390309).

Responsible Authority/Physicist _____ Date 1/31/04

DR# HGQ-0446

10.3 Using Insertion Tooling, insert the Beam Tube (MD-369802) into the Magnet Assembly as per Beam Tube Insertion Tooling (MD-369789).

Technician(s) _____ Date 1/31/04

10.4 Center the Beam Tube (MD-369802) between the Cold Masses by leaving equal amounts of insulated Beam Tube protruding from the End Plates. Measure from the face of the End Plate to the End of the Kapton Wrap on the Beam Tube.

Technician(s) _____ Date 1/31/04

10.5 Measure the Beam Tube length and record this measurement below.

10.5.1 Beam Tube Length: 14,293 mm

10.5.2 Subtract 12,610 mm (± 2mm) from the Beam Tube Length, and record here: 1683

10.5.3 Divide the Number recorded in step 10.5.2 by 2 and record here: 841.5

The measurement recorded in step 10.5.3 is the amount to be cut off from each end.

Technician(s) _____ Date 1/31/04

10.6 Measure from one end of the Beam Tube and place a mark at the distance from step 10.5.3.

Technician(s) _____ Date 1/31/04

10.7 Verify the placement of the Mark, measured in Step 10.6 is correct.

Crew Chief _____ Date 1/31/04

10.8 Using the Wachs Cutter, cut the Beam Tube at the Mark from Step 10.6.

Technician(s) _____ Date 2/3/04

10.9 Measure from one end of the Beam Tube and place a mark at the distance from step 10.5.3.

Technician(s) _____ Date 2/3/04

10.10 Verify the placement of the Mark, measured in Step 10.9 is correct. Measuring from the End Plate, this mark should be equal to the 'End Plate to Beam Tube' distance at the other end.

Crew Chief _____ Date 2-3-04

10.11 Using the Wachs Cutter, cut the Beam Tube at the Mark from Step 10.9.

Technician(s) _____ Date 2/3/04

XXX 10.12 Hipot the Beam Tube to coil, heaters and ground. (Max. Leakage < 0.5μA) @ 5KV

Hipot	Leakage or Failure Voltage	Pass	Fail
Beam Tube to coil, heaters and ground	.389 μA	✓	

Technician(s) _____ Date 2/3/04

Responsible Authority/Physicist _____ Date 2/3/04

11.0 Dome Installation

11.1 Reposition the IP End Dome as shown in Q2 Cold Mass Welded Assembly (ME-390309) using the Horizontal Witness Line from step 9.5.

Technician(s) _____ Date 2/3/04

11.2 Feed the Electrical wires/Bus through the proper ports as the IP End Dome (MD-390197) is brought into position against the End Plate.

Technician(s) _____ Date 2/3/04

TRR#1636 APPL WELDING IS PER R. Bossert 2/3/04 N/A

XXX 11.3 Install Spider Assembly (MC-430044) to protect wires.

Technician(s) N/A Date _____

Responsible Authority/Physicist N/A Date _____

11.4 Tack weld the IP End Dome in place at approximately 6-8 places around the Dome per (ME-390309).

Weldor(s) _____ Date 2/3/04

11.5 Weld the IP End Dome, skip weld around to minimize distortion per (ME-390309).

Weldor(s) _____ Date 2/3/04

11.6 Reposition the Non-IP End Dome as shown in Q2 Cold Mass Welded Assembly (ME-390309) using the Horizontal Witness Line from step 9.11.

Technician(s) _____ Date 2/3/04

11.7 Feed the Electrical wires/Bus through the proper ports as the Non-IP End Dome is brought into position against the End Plate.

Technician(s) _____ Date 2/3/04

11.8 Tack weld the Non-IP End Dome in place at approximately 6-8 places around the Dome as per (ME-390309).

Weldor(s) _____ Date 2/3/04

11.9 Weld the Non-IP End Dome, skip weld around to minimize distortion as per (ME-390309).

Weldor(s) _____ Date 2/3/04

X 11.10 Tack weld the corrector mounting hardware in place as per Q2 Coldmass welded assembly (ME-390309).

Weldor(s) _____ Date 2/4/04

11.11 If needed, perform a stretched wire measurement of the system, noting the relative position and roll of the three magnetic elements to each other.

Performed Stretch Wire Measurement?

Yes ☐ No ☒ (No Signature necessary, if 'No' box is checked)

N/A

Technician(s) Date

11.12 Mount and adjust the Shipping restraint screws.

Note(s):
Weld to corrector if necessary.

Technician(s) Date 2/4/04

11.13 Weld the Center Body Tube (MC-390112) as per Q2 Cold Mass Welded Assembly (ME-390309).

Weldor(s) Date 2/4/04

12.0 Cold Bore

12.1 Flare both ends of the Beam Tube using Flaring Tool (MC-390416) per Q2 Cold Mass Welded Assembly (MB-390309).

Technician(s) _____ Date 2/6/04

12.2 Position Cold Bore Flange (MC-390300) over the Beam Tube and onto IP End Dome (Q2a) per Q2 Cold Mass Welded Assembly (MB-390309).

Technician(s) _____ Date 2-6-04

12.3 Weld the Beam Tube to the Flange at IP End as per Q2 Cold Mass Welded Assembly (ME-390309).

Weldor(s) _____ Date 2/6/04

12.4 Add Spacer between Beam Tube Flange and End Dome, if necessary.

Spacer Added? Yes ☑ No ☐

Technician(s) _____ Date 2-6-04

12.5 Position the Cold Bore Flange (MC-390300) over the Beam Tube and onto the Non-IP End Dome (Q2b) per Q2 Cold Mass Welded Assembly (MB-390309).

Technician(s) _____ Date 2-6-04

12.6 Weld Beam Tube to Flange at NON-IP End as per Q2 Cold Mass Welded Assembly (ME-390309).

Weldor(s) Date 2/6/04

12.7 Align Beam Tube and the Flange at IP End per Q2 Cold Mass Welded Assembly (MB-390309).

Technician(s) Date 2/11/04

12.8 Weld the Flange to the IP End Dome as per Q2 Cold Mass Welded Assembly (ME-390309).

Weldor(s) Date 2/11/04

12.9 Align Beam Tube and Flange at NON-IP End per Q2 Cold Mass Welded Assembly (MB-390309).

Technician(s) Date 2/11/04

12.10 Weld the Flange to the Non-IP End Dome as per Q2 Cold Mass Welded Assembly (ME-390309).

Weldor(s) Date 2/11/04

13.0 Electrical Inspection

13.1 Perform an electrical inspection on each of the Individual Quadrants and the Cold Masses. Refer to the Valhalla and Leader Free Standing Coil Measurement Procedure (ES-292306).

To measure the resistance of a bussed Q2:

1. Use Valhalla Scientific 4300B digital micro-ohmmeter.
2. Set Test Current to 1 amp.
3. Set Scale to 2V full scale.
4. Turn temperature compensation on.
5. Turn test current off.
6. Put jumper between Q2a Q3 inner power lead and 5 KA bus as shown in figure.
7. Connect I_{HI} to the 5KA bus (Q2a Q3 inner power lead) as shown in figure.
8. Connect I_{LO} to the Q2b Q3 inner power lead as shown in figure.
9. Turn test current on.
10. Connect V_{HI} and V_{LO} buttons to voltage taps as shown below.
11. Read resistance and record in traveler.

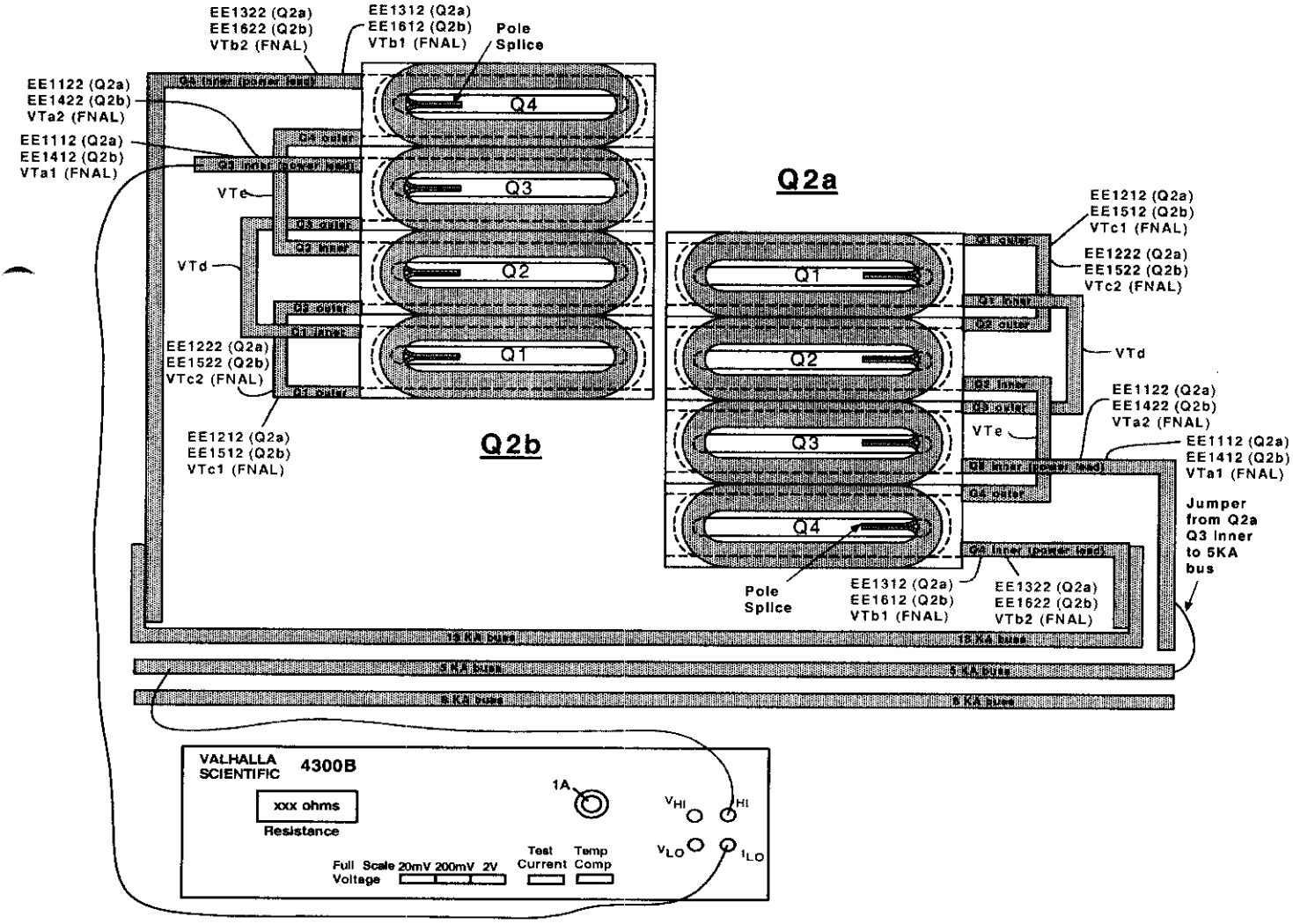

(Q2a) Resistance				Nominal ~ 560 to 585 mΩ
Voltage Tap Serial Numbers				Quadrant Total Resistance
Connect	Fermi	CERN	Quadrant	
V_{HI}	VTdQ2a	EMPTY	Quadrant 1	.5722 mΩ
V_{LO}	VTc1Q2a	EE1212		
V_{HI}	VTc1Q2a	EE1212	Quadrant 2	.5721 mΩ
V_{LO}	VTeQ2a	EMPTY		
V_{HI}	VTa1Q2a	EE1112	Quadrant 3	.5702 mΩ
V_{LO}	VTdQ2a	EMPTY		
V_{HI}	VTeQ2a	EMPTY	Quadrant 4	.7696 mΩ
V_{LO}	VTb1Q2a	EE1312		

V_{HI}	VTa1Q2a	EE1112	Total Cold Mass	Nominal ~ 2.305 Ω
V_{LO}	VTb1Q2a	EE1312		2.288 Ω

Technician(s) 2-14-04 Date

Check resistance of Redundant Voltage Taps.

Q2a Redundant Voltage Taps			
Connect	Fermi	CERN	Resistance
V_{HI}	VTa2Q2a	EE1122	.1145 Ω
V_{LO}	VTc2Q2a	EE1222	
V_{HI}	VTc2Q2a	EE1222	.144 Ω
V_{LO}	VTb2Q2a	EE1322	

Technician(s) Date

To measure Ls and Q of a Bussed Q2:

1. Use Hewlett Packard HP4284A digital LCR meter.
2. Turn line switch to on. The words "Measurement Display" should now be highlighted in the upper left corner of the display screen.
3. Use cursor buttons (shown in figure with arrows) to toggle down until "function" is highlighted near the upper left corner of the display screen.
4. Push the lowest of the five buttons to the right of display 3 times. (this button is shaded gray in the figure) The line in the display screen next to the second button down should now read "Ls-Q" and "function" near the upper left corner of the display should have the option "Ls-Q" chosen.
5. Scroll to "integer" using the cursor buttons. "Integer" will have the option "medium" chosen.
6. Press the 3rd button of five. The word "medium" should change to "long".
7. Connect H_{cur} to the 5KA bus (Q2a/Q3 inner power lead as shown in figure).
8. Connect L_{cur} to Q2b/Q3 inner power lead as shown in figure.
9. Connect H_{pot} and L_{pot} buttons to voltage taps as shown below.
10. Read Ls and Q from display and record in traveler.

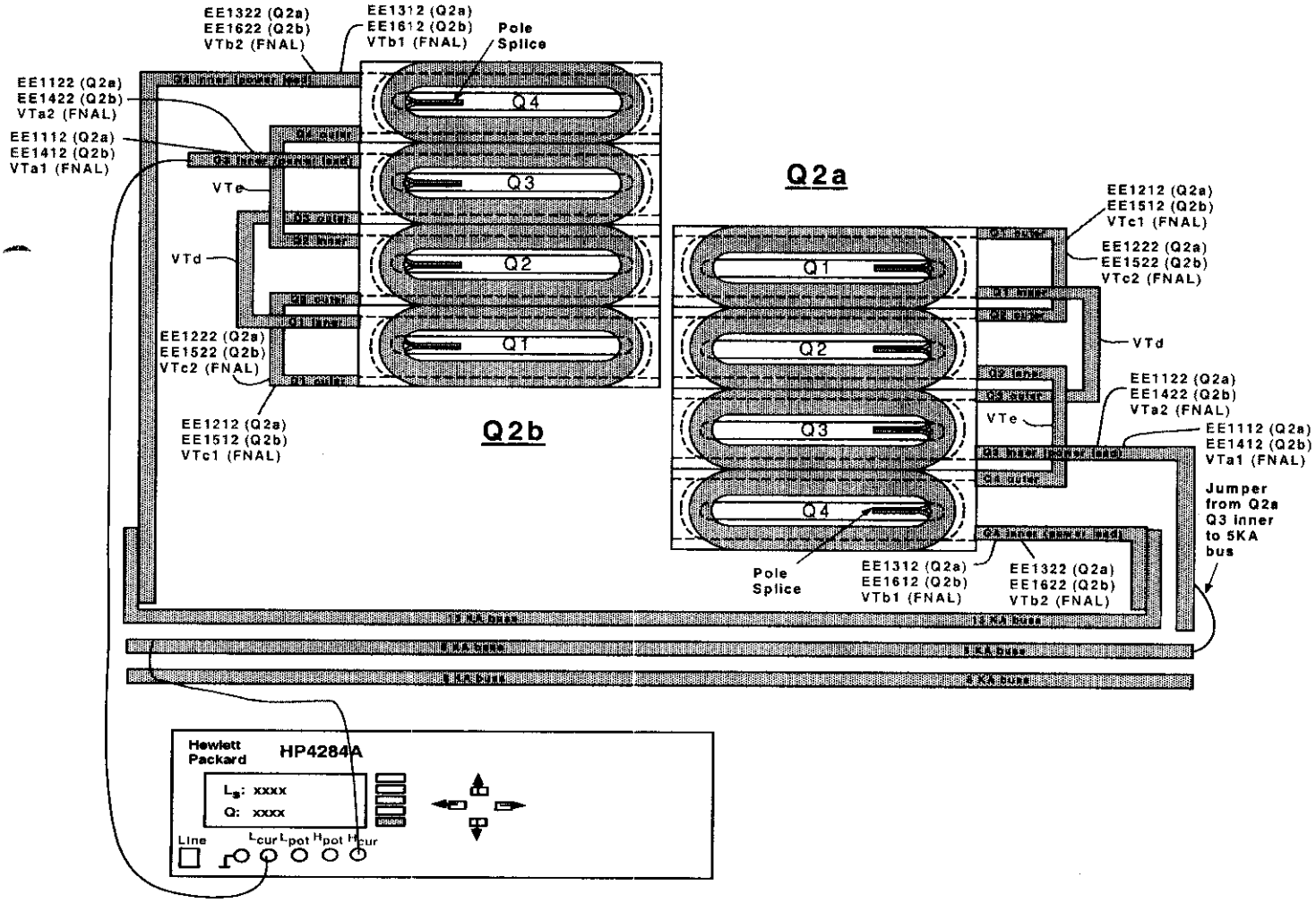

TAR#1636

(Q2a) Inductance				Nominal ~ 2.880 to 2.935 mH	
Voltage Tap Serial Numbers				Quadrant Total Inductance	
Connect	Fermi	CERN	Quadrant		
H_{POT}	VTdQ2a	EMPTY	Quadrant 1	3.9059 mH	3.3248
L_{POT}	VTc1Q2a	EE1212			
H_{POT}	VTc1Q2a	EE1212	Quadrant 2	3.2478 mH	3.3097
L_{POT}	VTeQ2a	EMPTY			
H_{POT}	VTdQ2a	EMPTY	Quadrant 3	4.9912 mH	3.2770
L_{POT}	VTa1Q2a	EE1112			
H_{POT}	VTeQ2a	EMPTY	Quadrant 4	3.1992 mH	3.3221
L_{POT}	VTb1Q2a	EE1312			

H_{POT}	VTa1Q2a	EE1112	Total Cold Mass	Nominal ~ 13.3376 mH	
L_{POT}	VTb1Q2a	EE1312		13.233 mH	

(Q2a) Q-Factor				Nominal ~ 4.5 to 5.2	
Voltage Tap Serial Numbers				Quadrant Total Q	
Connect	Fermi	CERN	Quadrant		
H_{POT}	VTdQ2a	EMPTY	Quadrant 1	5.9	4.0
L_{POT}	VTc1Q2a	EE1212			
H_{POT}	VTc1Q2a	EE1212	Quadrant 2	5.1	4.0
L_{POT}	VTeQ2a	EMPTY			
H_{POT}	VTa1Q2a	EE1112	Quadrant 3	5.9	4.1
L_{POT}	VTdQ2a	EMPTY			
H_{POT}	VTeQ2a	EMPTY	Quadrant 4	4.6	4.0
L_{POT}	VTb1Q2a	EE1312			

H_{POT}	VTa1Q2a	EE1112	Total Cold Mass	Nominal ~ 5.036	
L_{POT}	VTb1Q2a	EE1312		4.0	

Technician(s)

2-19-04
Date

To measure the resistance of a bussed Q2:

1. Use Valhalla Scientific 4300B digital micro-ohmmeter.
2. Set Test Current to 1 amp.
3. Set Scale to 2V full scale.
4. Turn temperature compensation on.
5. Turn test current off.
6. Put jumper between Q2a Q3 inner power lead and 5 KA bus as shown in figure.
7. Connect I_{HI} to the 5KA bus (Q2a Q3 inner power lead) as shown in figure.
8. Connect I_{LO} to the Q2b Q3 inner power lead as shown in figure.
9. Turn test current on.
10. Connect V_{HI} and V_{LO} buttons to voltage taps as shown below.
11. Read resistance and record in traveler.

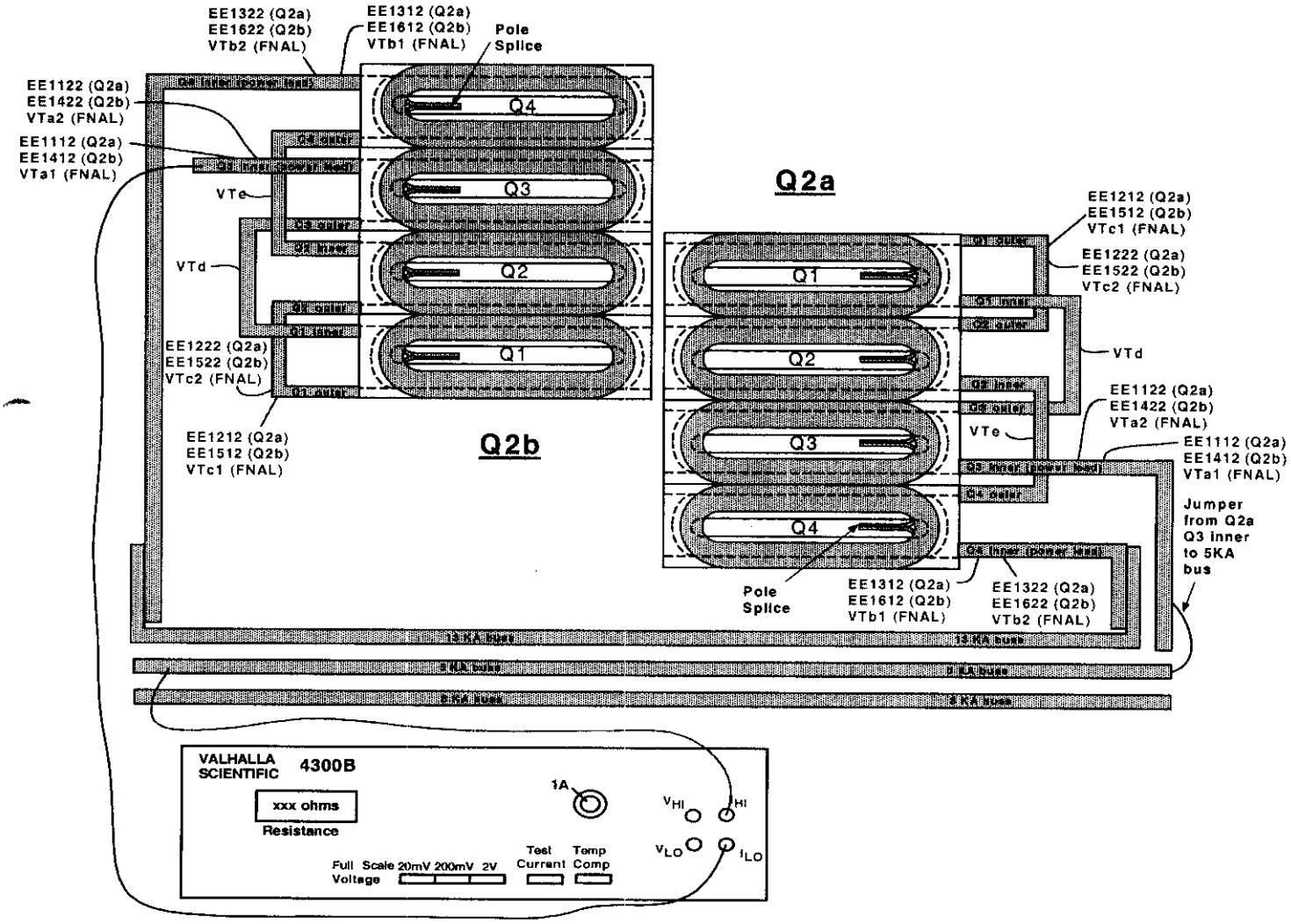

(Q2b) Resistance				Nominal ~ 560 to 585 mΩ
Voltage Tap Serial Numbers				Quadrant Total Resistance
Connect	Fermi	CERN	Quadrant	
V_{HI}	VTc1Q2b	EE1512	Quadrant 1	.5787 mΩ
V_{LO}	VTdQ2b	EMPTY		
V_{HI}	VTeQ2b	EMPTY	Quadrant 2	.5779 mΩ
V_{LO}	VTc1Q2b	EE1512		
V_{HI}	VTdQ2b	EMPTY	Quadrant 3	.5780 mΩ
V_{LO}	VTa1Q2b	EE1412		
V_{HI}	VTb1Q2b	EE1612	Quadrant 4	.5787 mΩ
V_{LO}	VTeQ2b	EMPTY		

V_{HI}	VTb1Q2b	EE1612	Total Cold Mass	Nominal ~ 2.305 Ω
V_{LO}	VTa1Q2b	EE1412		2.314 Ω

Technician(s) 2-14-04 Date

Check the resistance of the Redundant Voltage Taps.

Q2b Redundant Voltage Taps			
Connect	Fermi	CERN	Resistance
V_{HI}	VTc2Q2b	EE1522	1587 Ω
V_{LO}	VTa2Q2b	EE1422	
V_{HI}	VTb2Q2b	EE1622	1590 Ω
V_{LO}	VTc2Q2b	EE1522	

Technician(s) Date

To measure Ls and Q of a Bussed Q2:

1. Use Hewlett Packard HP4284A digital LCR meter.
2. Turn line switch to on. The words "Measurement Display" should now be highlighted in the upper left corner of the display screen.
3. Use cursor buttons (shown in figure with arrows) to toggle down until "function" is highlighted near the upper left corner of the display screen.
4. Push the lowest of the five buttons to the right of display 3 times. (this button is shaded gray in the figure) The line in the display screen next to the second button down should now read "Ls-Q" and "function" near the upper left corner of the display should have the option "Ls-Q" chosen.
5. Scroll to "integer" using the cursor buttons. "Integer" will have the option "medium" chosen.
6. Press the 3rd button of five. The word "medium" should change to "long".
7. Connect H_{cur} to the 5KA bus (Q2a/Q3 inner power lead as shown in figure).
8. Connect L_{cur} to Q2b/Q3 inner power lead as shown in figure.
9. Connect H_{pot} and L_{pot} buttons to voltage taps as shown below.
10. Read Ls and Q from display and record in traveler.

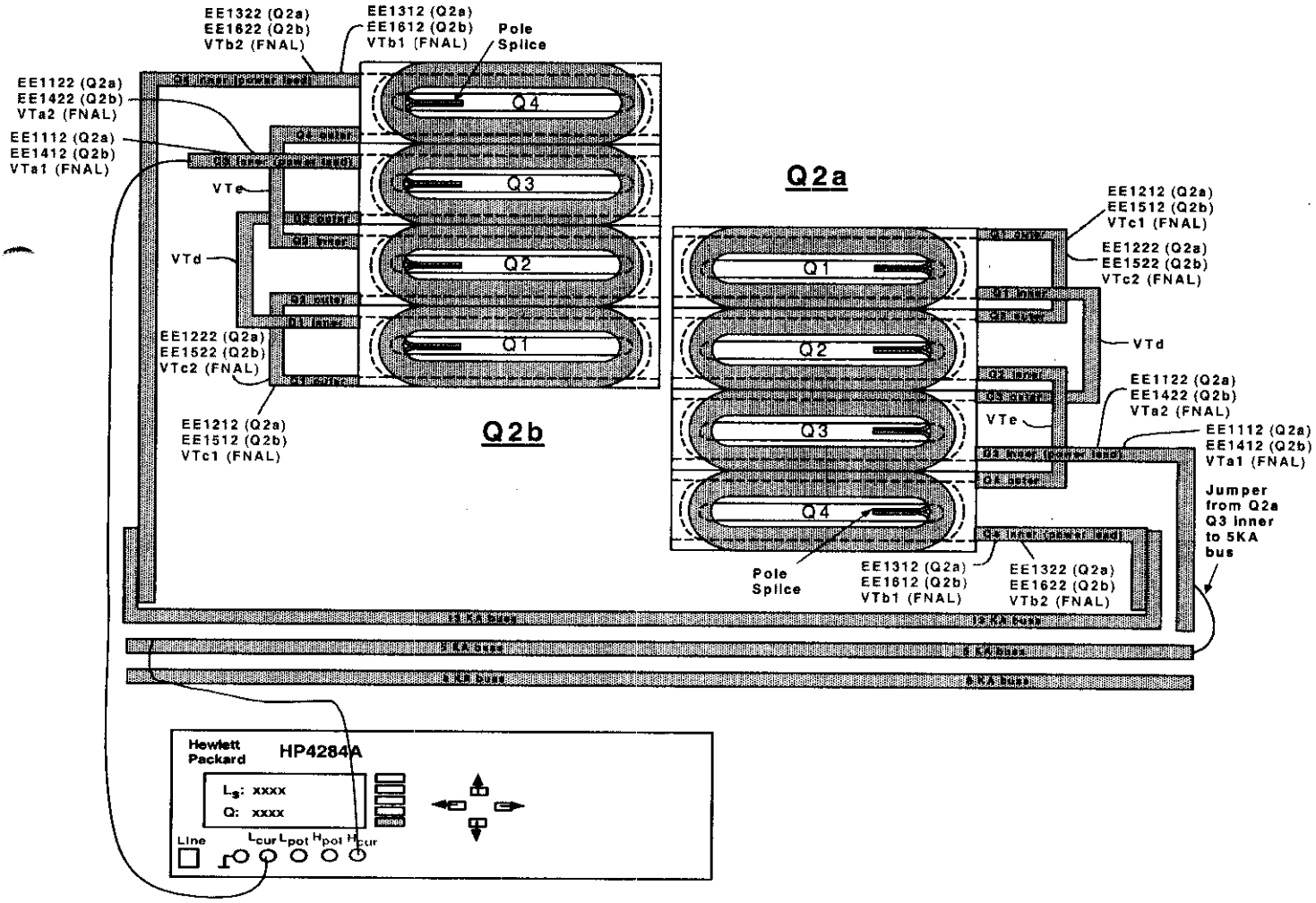

(Q2b) Inductance				Nominal ~ 2.880 to 2.935 mH
Voltage Tap Serial Numbers				Quadrant Total Inductance
Connect	Fermi	CERN	Quadrant	
H_{POT}	VTc1Q2b	EE1512	Quadrant 1	3.3182 mH
L_{POT}	VTdQ2b	EMPTY		
H_{POT}	VTeQ2b	EMPTY	Quadrant 2	3.3286 mH
L_{POT}	VTc1Q2b	EE1512		
H_{POT}	VTdQ2b	EMPTY	Quadrant 3	3.3257 mH
L_{POT}	VTa1Q2b	EE1412		
H_{POT}	VTb1Q2b	EE1612	Quadrant 4	3.2961 mH
L_{POT}	VTeQ2b	EMPTY		

H_{POT}	VTb1Q2b	EE1612	Total Cold Mass	Nominal ~ 13.3376 mH
L_{POT}	VTa1Q2b	EE1412		13268 mH

(Q2b) Q-Factor				Nominal ~ 4.5 to 5.2
Voltage Tap Serial Numbers				Quadrant Total Q
Connect	Fermi	CERN	Quadrant	
H_{POT}	VTc1Q2b	EE1512	Quadrant 1	4.0
L_{POT}	VTdQ2b	EMPTY		
H_{POT}	VTeQ2b	EMPTY	Quadrant 2	4.0
L_{POT}	VTc1Q2b	EE1512		
H_{POT}	VTdQ2b	EMPTY	Quadrant 3	4.1
L_{POT}	VTa1Q2b	EE1412		
H_{POT}	VTb1Q2b	EE1612	Quadrant 4	4.1
L_{POT}	VTeQ2b	EMPTY		

H_{POT}	VTb1Q2b	EE1612	Total Cold Mass	Nominal ~ 5.036
L_{POT}	VTa1Q2b	EE1412		4.1

Technician(s) _____ Date _____

To measure the resistance of a Thermometer (RTD):

1. Use Hewlett Packard HP3457A digital multimeter.
2. Record temperature of building within +/- 5 degrees.
3. Press line button to turn line on.
4. Connect wires as shown in Figure below.
   U+ (Black) to Sense HI
   I+ (Yellow) to Input HI
   U- (Red) to Sense LO
   I- (Green) to Input LO
5. Push blue button (function key) once.
6. Push OHMF button.
7. Verify arrow in readout is above the 4WΩ (meaning a 4 wire resistance measurement).
8. Read resistance in ohms and record in traveler.

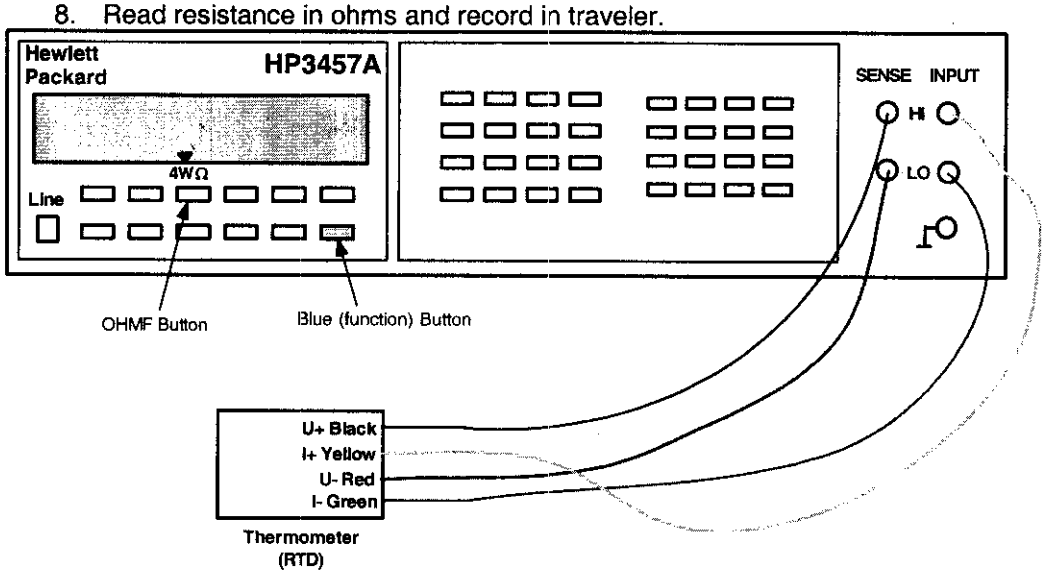

To measure the resistance of a Cryogenic (Warm-up) Heater

1. Use Hewlett Packard HP3457A digital multimeter.
2. Record temperature of building within +/- 5 degrees.
3. Press line button to turn line on.
4. Connect wires as shown in Figure below.
5. Push blue button (function key) once.
6. Push OHMF button.
7. Verify arrow in readout is above the 4WΩ (meaning a 4 wire resistance measurement).
   Note: Although this is technically a 4 wire measurement, it is effectively a 2 wire measurement, since there are only 2 wires connected to each heater.
8. Read resistance in ohms and record in traveler.

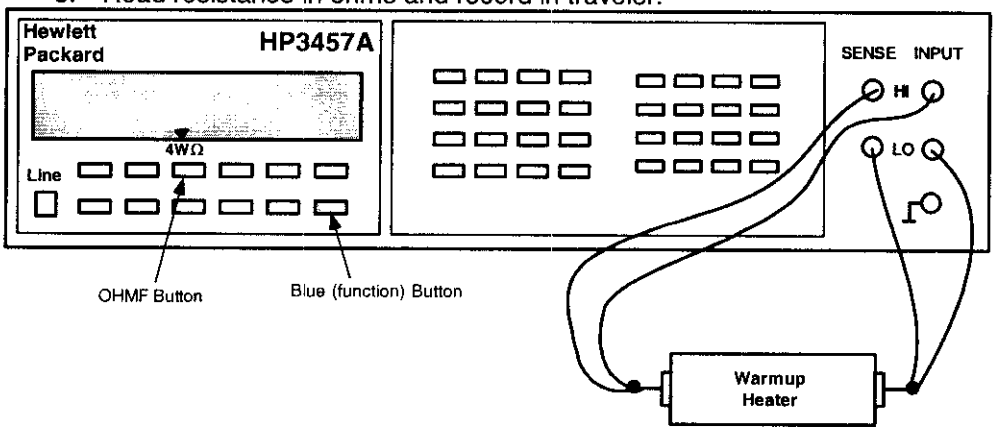

Q2a - RTD's and Cryogenic (warm-up) Heaters			
Temperature of Building (+/- 5°): 69			
Component	**Fermi**	**CERN**	**Resistance**
Q2a RTD, primary	TaQ2a	TT8312	58.593 Ω
Q2a RTD, redundant	TbQ2a	TT8322	40.315 Ω
Q2A Cryogenic (warm-up) Heater (LE) - wire toward cold mass end plate (CERN #1 I+)	W1aQ2A	EH8312+	16.9799 Ω
Q2A Cryogenic (warm-up) Heater (LE) - wire toward cold mass mag center (CERN #1 I-)	W2aQ2A	EH8312-	
Q2A Cryogenic (warm-up) Heater (Non-LE) - wire toward cold mass end plate (CERN #2 I+)	W1bQ2A	EH8322+	16.5339 Ω
Q2A Cryogenic (warm-up) Heater (Non-LE) - wire toward cold mass mag center (CERN #2 I-)	W2bQ2A	EH8322-	

Technician(s) _____ Date 2-19-04

Q2b - RTD's and Cryogenic (warm-up) Heaters			
Temperature of Building (+/- 5°): 69			
Component	**Fermi**	**CERN**	**Resistance**
Q2b RTD, primary	TaQ2b	TT8332	67.801 Ω
Q2b RTD, redundant	TbQ2b	TT8342	41.93 Ω
Q2B Cryogenic (warm-up) Heater (LE) - wire toward cold mass end plate (CERN #1 I+)	W1aQ2B	EH8332+	16.1526 Ω
Q2B Cryogenic (warm-up) Heater (LE) - wire toward cold mass mag center (CERN #1 I-)	W2aQ2B	EH8332-	
Q2B Cryogenic (warm-up) Heater (Non-LE) - wire toward cold mass end plate (CERN #2 I+)	W1bQ2B	EH8342+	16.477 Ω
Q2B Cryogenic (warm-up) Heater (Non-LE) - wire toward cold mass mag center (CERN #2 I-)	W2bQ2B	EH8342-	

Technician(s) _____ Date _____

Using the Hewlett Packard HP3457A digital multimeter, measure the Strip Heater Resistance for Q2a and Q2b.

Q2a Strip Heater Resistance				
Fermi	CERN	Description	Limit	Resistance
H1aQ2a	YT1112+	Circuit A	18.20 to 21 Ω	18.7135 Ω
H2aQ2a	YT1112-			
H1bQ2a	YT1122+	Circuit B	18.20 to 21 Ω	18.578 Ω
H2bQ2a	YT1122-			

Technician(s) _____ Date 2-14-04

Q2b Strip Heater Resistance				
Fermi	CERN	Description	Limit	Resistance
H1aQ2b	YT1132+	Circuit A	18.20 to 21 Ω	19.2028 Ω
H2aQ2b	YT1132-			
H1bQ2b	YT1142+	Circuit B	18.20 to 21 Ω	19.249 Ω
H2bQ2b	YT1142-			

Technician(s) _____ Date 2-14-04

13.2 Using the HP3457A, connect power thru the connector Power Leads (HA2 and HB2 to measure Q2-H2 or VA2 and VB2 to measure Q2-V2). Connect the Sense Leads as shown in table below and record resistance.

(Magnet Bus Leads)

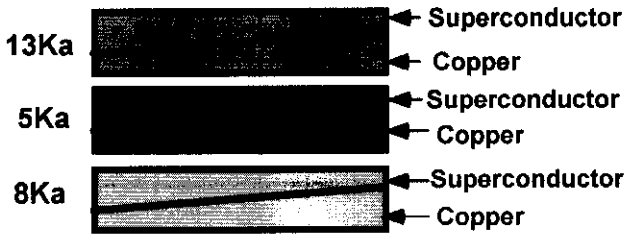

(Corrector Bus Leads)

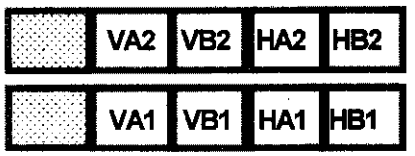

(View Looking into Q2b)

MCBX Corrector Coil Taps			
Component	**FermiLab Label**	**CERN Label**	**Resistance**
Q2-H2	**VTH2**	**EE8122**	.061 Ω
	HA2	**N/A**	
Q2-V2	**VTV2**	**EE8112**	.0625 Ω
	VA2	**N/A**	

Technician(s) Date

XXX 13.3 Hipot according to table below. Hipot to 5kV. Maximum leakage is 3μA.

Hipot Heaters to Coil and Ground.

High Potential	Grounded	Floating	Leakage
All Strip Heaters	Coils, Yoke, Q1 Instrumentation Bus, Lead and Corrector Coil Busses, RTD's and Warm-up Heaters	Nothing	1.130 μA

Hipot Coil to Heaters and Ground.

DR HQ442

High Potential	Grounded	Floating	Leakage
All Coils	Strip Heaters, Yoke, Q1 Instrumentation Bus, 8kA and 5kA Lead Busses and Corrector Coil Busses, RTD's and Warm-up Heaters	Nothing	

Technician(s) Date

Responsible Authority/Physicist Date

DR# HGQ 0459

13.4 Check Q1 Instrumentation Bus Wires for Continuity.

Module	Pin	Fermi	CERN	KEK	Description	Done
M2	1	VTa1Q1	EE1111	a1	Q1 Lead Voltage Tap "a", primary	✓
M2	2	VTa2Q1	EE1121	a2	Q1 Lead Voltage Tap "a", redundant	✓
M2	3	VTc1Q1	EE1211	c1	Q1 Center Voltage Tap "c", primary	✓
M2	4	VTc2Q1	EE1221	c2	Q1 Center Voltage Tap "c", redundant	✓
M2	5	VTb1Q1	EE1311	b1	Q1 Lead Voltage Tap "b", primary	✓
M3	5	VTb2Q1	EE1321	b2	Q1 Lead Voltage Tap "b", redundant	✓
M5	1	VTH1	EE8121		Corrector voltage tap Q1-H1 (skew dipole) (on MCBX, MCBXH, A+ lead)	✓
M5	2	VTV1	EE8111		Corrector voltage tap Q1-V1 (normal dipole) (on MCBX, MCBXV A+ lead)	✓
M7	1	W1aQ1	EH8311+		Q1 Cryogenic Heater lead end - wire at top (CERN #1 I+)	✓
M7	2	W2aQ1	EH8311-		Q1 Cryogenic Heater lead end - wire at bottom (CERN #1 I-)	✓
M7	3	W1bQ1	EH8321+		Q1 Cryogenic Heater non-lead end - wire at top (CERN #2 I+)	✓
M7	4	W2bQ1	EH8321-		Q1 Cryogenic Heater non-lead end - wire at bottom (CERN #2 I-)	✓
M9	1	H1aQ1	YT1111+	HA1	Q1 Protection (Strip) Heater, ("a" circuit) (CERN lead #1+)	✓
M9	3	H2aQ1	YT1111-	HA2	Q1Protection (Strip) Heater, ("a" circuit) (CERN lead #1-)	✓
M9	5	H1bQ1	YT1121+	HB1	Q1 Protection (Strip) Heater, ("b" circuit) (CERN lead #2+)	✓
M10	4	H2bQ1	YT1121-	HB2	Q1 Protection (Strip) Heater, ("b" circuit) (CERN lead #2-)	✓
M12	1	TaQ1_I+	TT8311 I+		Q1 RTD, primary Wire color: Yellow	✓
M12	2	TaQ1_I-	TT8311 I-		Q1 RTD, primary Wire color: Green	✓
M12	3	TaQ1_V+	TT8311 U+		Q1 RTD, primary Wire color: Black	✓
M12	4	TaQ1_V-	TT8311 U-		Q1 RTD, primary Wire color: Red	✓
M12	5	TbQ1_I+	TT8321 I+		Q1 RTD, primary Wire color: Yellow	✓
M12	6	TbQ1_I-	TT8321 I-		Q1 RTD, primary Wire color: Green	✓
M12	11	TbQ1_V+	TT8321 U+		Q1 RTD, primary Wire color: Black	✓
M12	10	TbQ1_V-	TT8321 U-		Q1 RTD, primary Wire color: Red	✓

Technician(s)

4-20-04
Date

14.0 Installation of Hypertronics

14.1 Install Hypertronics Connectors at **Q2a** end as per Q2 Cold Mass Welded Assembly (ME-390309) and Hypertronics Connector Assembly Q2 Magnet Return End (MB-418133). Pin Numbers for connectors are shown in Table 14.1 below.

Table 14.1

Q2 connector (ip, or Q2a end) for Q1-Q2 connection. Completed on 11-20-03.					
Module	**Pin**	**Fermilab Label**	**CERN Label**	**KEK Label**	**Description**
M1	1				Blank Module
M1	2				
M1	3				
M1	4				
M1	5				
M2	1	VTa1Q1	EE1111	a1	Q1 Lead Voltage Tap "a", primary
M2	2	VTa2Q1	EE1121	a2	Q1 Lead Voltage Tap "a",redundant
M2	3	VTc1Q1	EE1211	c1	Q1 Center Voltage Tap "c", primary
M2	4	VTc2Q1	EE1221	c2	Q1 Center Voltage Tap "c", redundant
M2	5	VTb1Q1	EE1311	b1	Q1 Lead Voltage Tap "b", primary
M3	1	Empty	Empty		No Connection
M3	2	Empty	Empty		No Connection
M3	3	Empty	Empty		No Connection
M3	4	Empty	Empty		No Connection
M3	5	VTb2Q1	EE1321	b2	Q1 Lead Voltage Tap "b",redundant
M4	1				Blank Module
M4	2				
M4	3				
M4	4				
M4	5				
M5	1	VTH1	EE8121		Corrector voltage tap Q1-H1 (skew dipole) (on MCBX, MCBXH, A+ lead)
M5	2	VTV1	EE8111		Corrector voltage tap Q1-V1 (normal dipole) (on MCBX, MCBXV A+ lead)
M5	3	Empty	Empty		No Connection
M5	4	Empty	Empty		No Connection
M5	5	Empty	Empty		No Connection

Table 14.1

Module	Pin	Fermilab Label	CERN Label	KEK Label	Description
M6	1				Blank Module
M6	2				
M6	3				
M6	4				
M6	5				
M7	1	W1aQ1	EH8311+		Q1 Cryogenic Heater lead end - wire at top (CERN #1 I+)
M7	2	W2aQ1	EH8311-		Q1 Cryogenic Heater lead end - wire at bottom (CERN #1 I-)
M7	3	W1bQ1	EH8321+		Q1 Cryogenic Heater non-lead end - wire at top (CERN #2 I+)
M7	4	W2bQ1	EH8321-		Q1 Cryogenic Heater non-lead end - wire at bottom (CERN #2 I-)
M7	5	Empty	Empty		No connection
M8	1				Blank Module
M8	2				
M8	3				
M8	4				
M8	5				
M9	1	H1aQ1	YT1111+	HA1	Q1 Protection (Strip) Heater, ("a" circuit) (CERN lead #1+)
M9	2	Empty	Empty		No connection
M9	3	H2aQ1	YT1111-	HA2	Q1Protection (Strip) Heater, ("a" circuit) (CERN lead #1-)
M9	4	Empty	Empty		No connection
M9	5	H1bQ1	YT1121+	HB1	Q1 Protection (Strip) Heater, ("b" circuit) (CERN lead #2+)
M10	1	Empty	Empty		No Connection
M10	2	Empty	Empty		No Connection
M10	3	Empty	Empty		No Connection
M10	4	H2bQ1	YT1121-	HB2	Q1 Protection (Strip) Heater, ("b" circuit) (CERN lead #2-)
M10	5	Empty	Empty		No Connection

Table 14.1

Module	Pin	Fermilab Label	CERN Label	KEK Label	Description
M11	1				Blank Module
M11	2				
M11	3				
M11	4				
M11	5				
Note: Pin numbers of Module M12 are not listed in numerical order					
M12	1	TaQ1_I+	TT8311 I+		Q1 RTD, primary Wire color: Yellow
M12	2	TaQ1_I-	TT8311 I-		Q1 RTD, primary Wire color: Green
M12	3	TaQ1_V+	TT8311 U+		Q1 RTD, primary Wire color: Black
M12	4	TaQ1_V-	TT8311 U-		Q1 RTD, primary Wire color: Red
M12	5	TbQ1_I+	TT8321 I+		Q1 RTD, redundant: Wire color: Yellow
M12	6	TbQ1_I-	TT8321 I-		Q1 RTD, redundant: Wire color: Green
M12	11	TbQ1_V+	TT8321 U+		Q1 RTD, redundant: Wire color: Black
M12	10	TbQ1_V-	TT8321 U-		Q1 RTD, redundant: Wire color: Red
M12	9	Empty	Empty		No connection
M12	8	Empty	Empty		No connection
M12	7	Empty	Empty		No connection
M12	12	Empty	Empty		No connection
M12	13	Empty	Empty		No connection
M12	14	Empty	Empty		No connection
M12	15	Empty	Empty		No connection
M12	16	Empty	Empty		No connection
M12	17	Empty	Empty		No connection

Hypertronics Connector Pin Locations for Q2 (ip, or Q2a end)
VIEW: Female (receptacle) solder cup side

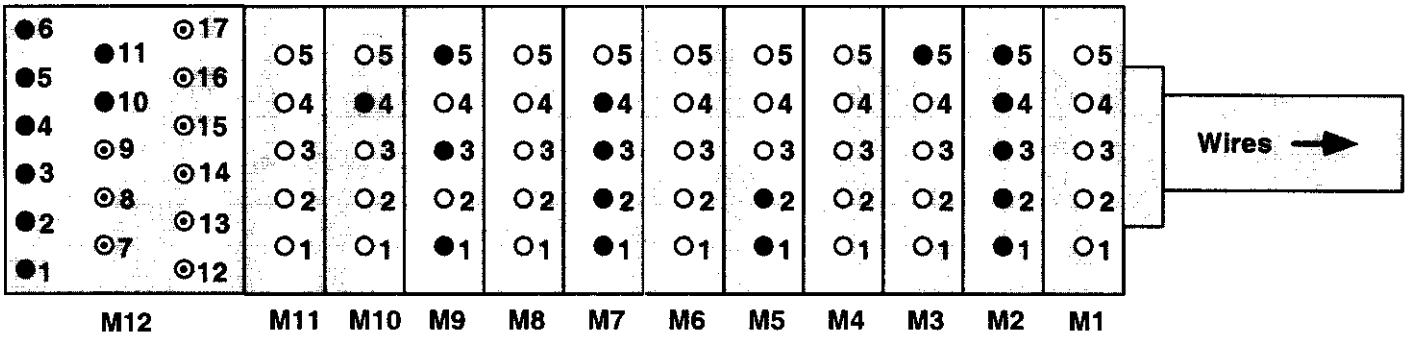

- ● Hole filled in grey: Wire soldered to pin.
- ⊙ Hole with dot in center: Pin exists but no wire soldered to it.
- O Hole filled in white: No pin. Hole is drilled out.

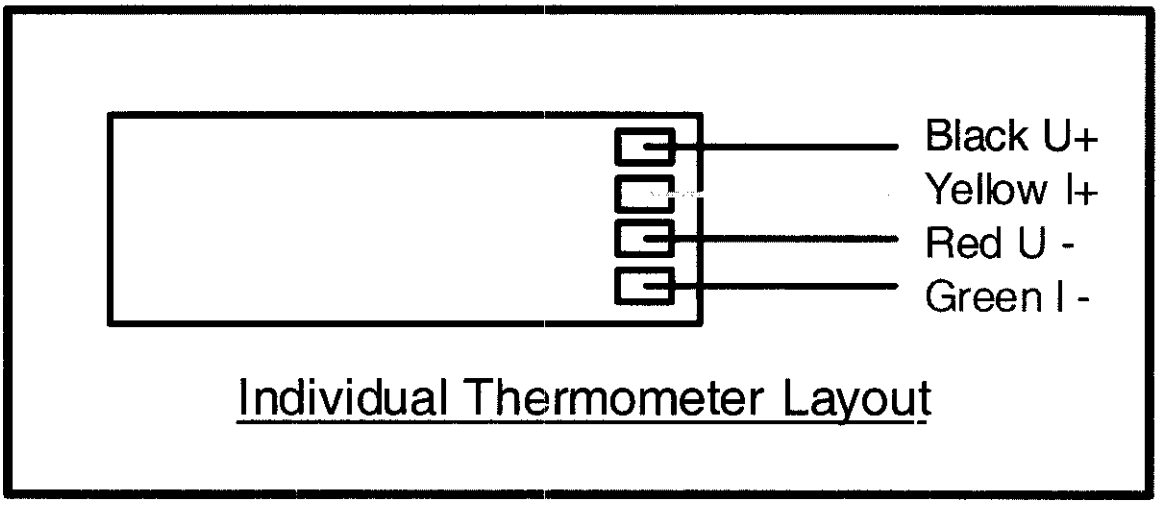

Technician(s) _____ Date 4/22/04

14.2 Install Hypertronics Connectors at **Q2b** end as per Q2 Cold Mass Welded Assembly (ME-390309) and Hypertronics Connector Assembly (MB-418083).
Pin Numbers for connectors are shown in Table 14.2 below.

Table 14.2

Q2 connector (non-ip, or Q2b end) for Q2-Q3 connection Completed on 11-20-03					
Module	**Pin**	**Fermilab Label**	**CERN Label**	**KEK Label**	**Description**
M1	1				Blank Module
M1	2				
M1	3				
M1	4				
M1	5				
M2	1	VTa1Q1	EE1111	a1	Q1 Lead Voltage Tap "a" , primary
M2	2	VTa2Q1	EE1121	a2	Q1 Lead Voltage Tap "a", redundant
M2	3	VTc1Q1	EE1211	c1	Q1 Center Voltage Tap "c", primary
M2	4	VTc2Q1	EE1221	c2	Q1 Center Voltage Tap "c", redundant
M2	5	VTb1Q1	EE1311	b1	Q1 Lead Voltage Tap "b", primary
M3	1	VTc1Q2a	EE1212		Q2a Center Voltage Tap "c", primary
M3	2	VTdQ2a	Empty		Q2a Quarter Coil Voltage Tap "d" (Q1inner-Q3 outer interface)
M3	3	VTa2Q2a	EE1122		Q2a lead Voltage Tap "a", redundant
M3	4	VTa1Q2a	EE1112		Q2a Lead Voltage Tap "a", primary
M3	5	VTb2Q1	EE1321	b2	Q1 Lead Voltage Tap "b", redundant
M4	1	VTc2Q2a	EE1222		Q2a Center Voltage Tap "c", redundant
M4	2	VTeQ2a	Empty		Q2a Quarter Voltage Tap "e", (Q2 inner -Q4 outer interface)
M4	3	VTb1Q2a	EE1312		Q2a Lead Voltage Tap "b", primary
M4	4	VTb2Q2a	EE1322		Q2a Lead Voltage Tap "b", redundant
M4	5	VTb1Q2b	EE1612		Q2b lead Voltage Tap "b", primary
M5	1	VTdQ2b	Empty		Q2b Quarter Coil Voltage Tap "d" (Q1inner-Q3 outer interface)
M5	2	VTc2Q2b	EE1522		Q2b Center Voltage Tap "c", redundant
M5	3	VTc1Q2b	EE1512		Q2b Center Voltage Tap "c", primary
M5	4	VTeQ2b	Empty		Q2b Quarter Voltage Tap "e", (Q2 inner -Q4 outer interface)
M5	5	VTb2Q2b	EE1622		Q2b Lead Voltage Tap "b" redundant

Table 14.2

Module	Pin	Fermilab Label	CERN Label	KEK Label	Description
M6	1	VTa1Q2b	EE1412		Q2b Lead Voltage Tap "a", primary
M6	2	VTa2Q2b	EE1422		Q2b Lead Voltage Tap "a", redundant
M6	3	Empty	Empty		No connection
M6	4	Empty	Empty		No connection
M6	5	Empty	Empty		No connection
M7	1				Blank Module
M7	2				
M7	3				
M7	4				
M7	5				
M8	1	VTH1	EE8121		Corrector voltage tap Q1-H1 (skew dipole) (on MCBX, MCBXH, A+ lead)
M8	2	VTV1	EE8111		Corrector voltage tap Q1-V1 (normal dipole) (on MCBX, MCBXV A+ lead)
M8	3	VTH2	EE8122		Corrector voltage tap Q2-H2 (skew dipole) (on MCBX, MCBXH, A+ lead)
M8	4	VTV2	EE8112		Corrector voltage tap Q2-V2 (normal dipole) (on MCBX, MCBXV, A+ lead)
M8	5	Empty	Empty		No connection
M9	1				Blank Module
M9	2				
M9	3				
M9	4				
M9	5				
M10	1	W1aQ1	EH8311+		Q1 Cryogenic Heater lead end - wire at top (CERN #1 I+)
M10	2	W2aQ1	EH8311-		Q1 Cryogenic Heater lead end - wire at bottom (CERN #1 I-)
M10	3	W1bQ1	EH8321+		Q1 Cryogenic Heater non-lead end - wire at top (CERN #2 I+)
M10	4	W2bQ1	EH8321-		Q1 Cryogenic Heater non-lead end - wire at bottom (CERN #2 I-)
M10	5	Empty	Empty		No connection

Table 14.2

Module	Pin	Fermilab Label	CERN Label	KEK Label	Description
M11	1	W1aQ2A	EH8312+		Q2A Cryogenic Heater lead end - wire toward cold mass end plate (CERN #1 I+)
M11	2	W2aQ2A	EH8312-		Q2A Cryogenic Heater lead end - wire toward cold mass mag center (CERN #1 I-)
M11	3	W1bQ2A	EH8322+		Q2A Cryogenic Heater non-lead end- wire toward cold mass end plate (CERN #2 I+)
M11	4	W2bQ2A	EH8322-		Q2A Cryogenic Heater non-lead end- wire toward cold mass mag center (CERN #2 I-)
M11	5	Empty	Empty		No connection
M12	1	W1aQ2B	EH8332+		Q2B Cryogenic Heater lead end - wire toward cold mass end plate (CERN #1 I+)
M12	2	W2aQ2B	EH8332-		Q2B Cryogenic Heater lead end - wire toward cold mass mag center (CERN #1 I-)
M12	3	W1bQ2B	EH8342+		Q2B Cryogenic Heater non-lead end- wire toward cold mass end plate (CERN #2 I+)
M12	4	W2bQ2B	EH8342-		Q2B Cryogenic Heater non-lead end- wire toward cold mass mag center (CERN #2 I-)
M12	5	Empty	Empty		No connection
M13	1				Blank Module
M13	2				
M13	3				
M13	4				
M13	5				
M14	1	H1aQ1	YT1111+	HA1	Q1 Protection (Strip) Heater, ("a" circuit) (CERN lead #1+)
M14	2	Empty	Empty		No connection
M14	3	H2aQ1	YT1111-	HA2	Q1Protection (Strip) Heater, ("a" circuit) (CERN lead #1-)
M14	4	Empty	Empty		No connection
M14	5	H1bQ1	YT1121+	HB1	Q1 Protection (Strip) Heater, ("b" circuit) (CERN lead #2+)

Table 14.2

Module	Pin	Fermilab Label	CERN Label	KEK Label	Description
M15	1	Empty	Empty		No connection
M15	2	H1aQ2a	YT1112+		Q2a Protection (Strip) Heater, 1-4 & 2-3 circuit (FNAL lead A+) (CERN lead #1+)
M15	3	Empty	Empty		No connection
M15	4	H2bQ1	YT1121-	HB2	Q1 Protection (Strip) Heater, ("b" circuit) (CERN lead #2-)
M15	5	Empty	Empty		No connection
M16	1	H2aQ2a	YT1112-		Q2a Protection (Strip) Heater, 1-4 & 2-3 circuit (FNAL lead A-) (CERN lead #1-)
M16	2	Empty	Empty		No connection
M16	3	H1bQ2a	YT1122+		Q2a Protection (Strip) Heater, 1-2 & 3-4 circuit (FNAL lead B+) (CERN lead#2+)
M16	4	Empty	Empty		No connection
M16	5	H2bQ2a	YT1122-		Q2a Protection (Strip) Heater, 1-2 & 3-4 circuit (FNAL lead B-) (CERN lead #2-)
M17	1	Empty	Empty		No connection
M17	2	H2aQ2b	YT1132-		Q2b Protection (Strip) Heater, 1-4 & 2-3 circuit (FNAL lead A-) (CERN lead #1-)
M17	3	Empty	Empty		No connection
M17	4	H1aQ2b	YT1132+		Q2b Protection (Strip) Heater, 1-4 & 2-3 circuit (FNAL lead A+) (CERN lead #1+)
M17	5	Empty	Empty		No connection
M18	1	H1bQ2b	YT1142+		Q2b Protection (Strip) Heater, 1-2 & 3-4 circuit (FNAL lead B+) (CERN lead#2+)
M18	2	Empty	Empty		No connection
M18	3	H2bQ2b	YT1142-		Q2b Protection (Strip) Heater, 1-2 & 3-4 circuit (FNAL lead B-) (CERN lead #2-)
M18	4	Empty	Empty		No connection
M18	5	Empty	Empty		No connection

Table 14.2

Module	Pin	Fermilab Label	CERN Label	KEK Label	Description
M19	1				Blank Module
M19	2				
M19	3				
M19	4				
M19	5				
Note: Pin numbers of Module M20 are not listed in numerical order					
M20	1	TaQ1_I+	TT8311 I+		Q1 RTD, primary Wire color: Yellow
M20	2	TaQ1_I-	TT8311 I-		Q1 RTD, primary Wire color: Green
M20	3	TaQ1_V+	TT8311 U+		Q1 RTD, primary Wire color: Black
M20	4	TaQ1_V-	TT8311 U-		Q1 RTD, primary Wire color: Red
M20	5	TbQ1_I+	TT8321 I+		Q1 RTD, redundant: Wire color: Yellow
M20	6	TbQ1_I-	TT8321 I-		Q1 RTD, redundant: Wire color: Green
M20	11	TbQ1_V+	TT8321 U+		Q1 RTD, redundant: Wire color: Black
M20	10	TbQ1_V-	TT8321 U-		Q1 RTD, redundant: Wire color: Red
M20	9	TaQ2a_I+	TT8312 I+		Q2a RTD, primary Wire color: Yellow
M20	8	TaQ2a_I-	TT8312 I-		Q2a RTD, primary Wire color: Green
M20	7	TaQ2a_V+	TT8312 U+		Q2a RTD, primary Wire color: Black
M20	12	TaQ2a_V-	TT8312 U-		Q2a RTD, primary Wire color: Red
M20	13	TbQ2a_I+	TT8322 I+		Q2a RTD, redundant: Wire color: Yellow
M20	14	TbQ2a_I-	TT8322 I-		Q2a RTD, redundant: Wire color: Green
M20	15	TbQ2a_V+	TT8322 U+		Q2a RTD, redundant: Wire color: Black
M20	16	TbQ2a_V-	TT8322 U-		Q2a RTD, redundant: Wire color: Red
M20	17	Empty	Empty		No connection

Table 14.2

Note: Pin numbers of Module M21 are not listed in numerical order					
Module	**Pin**	**Fermilab Label**	**CERN Label**	**KEK Label**	**Description**
M21	1	TaQ2b_I+	TT8332 I+		Q2b RTD, primary Wire color: Yellow
M21	2	TaQ2b_I-	TT8332 I-		Q2b RTD, primary Wire color: Green
M21	3	TaQ2b_V+	TT8332 U+		Q2b RTD, primary Wire color: Black
M21	4	TaQ2b_V-	TT8332 U-		Q2b RTD, primary Wire color: Red
M21	5	TbQ2b_I+	TT8342 I+		Q2b RTD, redundant: Wire color: Yellow
M21	6	TbQ2b_I-	TT8342 I-		Q2b RTD, redundant: Wire color: Green
M21	11	TbQ2b_V+	TT8342 U+		Q2b RTD, redundant: Wire color: Black
M21	10	TbQ2b_V-	TT8342 U-		Q2b RTD, redundant: Wire color: Red
M21	9	Empty	Empty		No connection
M21	8	Empty	Empty		No connection
M21	7	Empty	Empty		No connection
M21	12	Empty	Empty		No connection
M21	13	Empty	Empty		No connection
M21	14	Empty	Empty		No connection
M21	15	Empty	Empty		No connection
M21	16	Empty	Empty		No connection
M21	17	Empty	Empty		No connection

Hypertronics Connector pin locations for Q2 (non-ip, or Q2b end)
VIEW: Male (pin) solder cup side

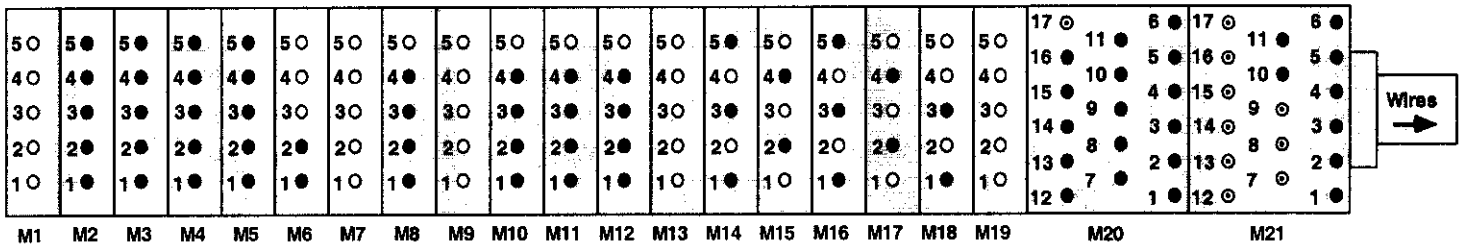

- ● **Hole filled in grey: Wire soldered to pin.**
- ⊙ **Hole with dot in center: Pin exists but no wire soldered to it.**
- ○ **Hole filled in white: No pin. Hole is drilled out.**

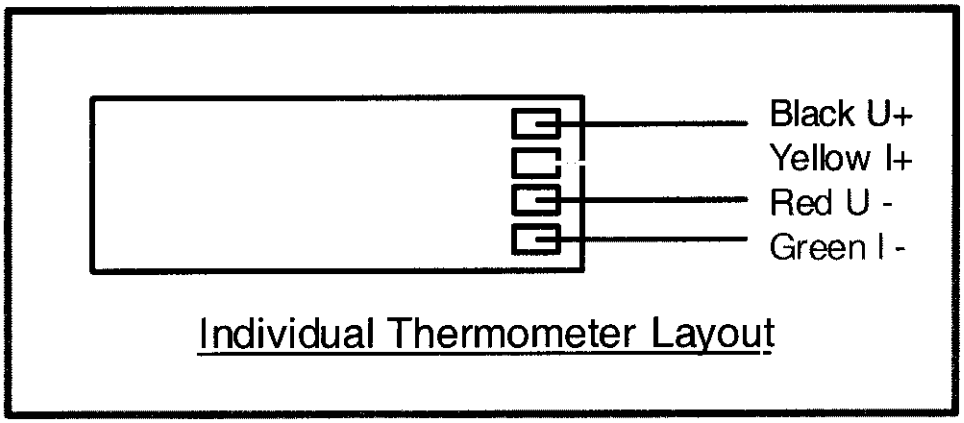

XXX 14.3 Check installation of Hypertronics. Ensure Hypertronics were installed as per Q2 Cold Mass Welded Assembly (ME-390309), Hypertronics Connector Assembly Q2 Magnet Return End (MB-418133) and Hypertronics Connector Assembly (MB-418083).

Technician(s) — Date: 4-23-04

Responsible Authority/Physicist — Date: 4-23-04

15.0 Final Electrical Inspection

15.1 Perform an electrical inspection on each of the Individual Quadrants and the Cold Masses. Refer to the Valhalla and Leader Free Standing Coil Measurement Procedure (ES-292306).

To measure the resistance of a bussed Q2:

1. Use Valhalla Scientific 4300B digital micro-ohmmeter.
2. Set Test Current to 1 amp.
3. Set Scale to 2V full scale.
4. Turn temperature compensation on.
5. Turn test current off.
6. Put jumper between Q2a Q3 inner power lead and 5 KA bus as shown in figure.
7. Connect I_{HI} to the 5KA bus (Q2a Q3 inner power lead) as shown in figure.
8. Connect I_{LO} to the Q2b Q3 inner power lead as shown in figure.
9. Turn test current on.
10. Connect V_{HI} and V_{LO} buttons to voltage taps as shown below.
11. Read resistance and record in traveler.

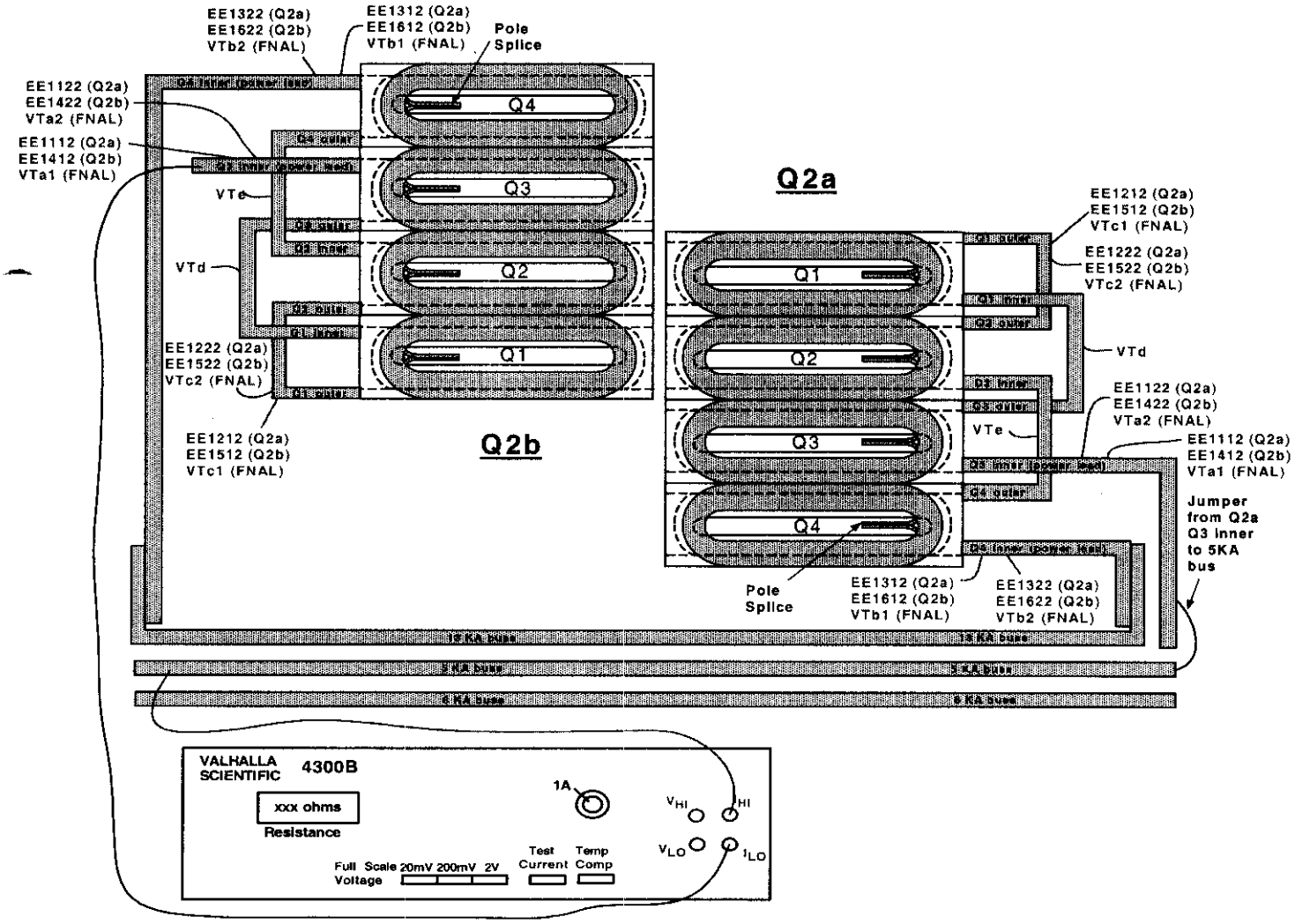

(Q2a) Resistance				Nominal ~ 560 to 585 mΩ
Voltage Tap Serial Numbers				Quadrant Total Resistance
Connect	Fermi	CERN	Quadrant	
V_{HI}	VTdQ2a	EMPTY	Quadrant 1	571.7 mΩ
V_{LO}	VTc1Q2a	EE1212		
V_{HI}	VTc1Q2a	EE1212	Quadrant 2	571.6 mΩ
V_{LO}	VTeQ2a	EMPTY		
V_{HI}	VTa1Q2a	EE1112	Quadrant 3	569.4 mΩ
V_{LO}	VTdQ2a	EMPTY		
V_{HI}	VTeQ2a	EMPTY	Quadrant 4	568.1 mΩ
V_{LO}	VTb1Q2a	EE1312		

V_{HI}	VTa1Q2a	EE1112	Total Cold Mass	Nominal ~ 2.305 Ω
V_{LO}	VTb1Q2a	EE1312		2.281 Ω

Technician(s) Date 4/23/04

Check resistance of Redundant Voltage Taps.

Q2a Redundant Voltage Taps			
Connect	Fermi	CERN	Resistance
V_{HI}	VTa2Q2a	EE1122	1.142 Ω
V_{LO}	VTc2Q2a	EE1222	
V_{HI}	VTc2Q2a	EE1222	1.140 Ω
V_{LO}	VTb2Q2a	EE1322	

Technician(s) Date 4/23/04

To measure Ls and Q of a Bussed Q2:

1. Use Hewlett Packard HP4284A digital LCR meter.
2. Turn line switch to on. The words "Measurement Display" should now be highlighted in the upper left corner of the display screen.
3. Use cursor buttons (shown in figure with arrows) to toggle down until "function" is highlighted near the upper left corner of the display screen.
4. Push the lowest of the five buttons to the right of display 3 times. (this button is shaded gray in the figure) The line in the display screen next to the second button down should now read "Ls-Q" and "function" near the upper left corner of the display should have the option "Ls-Q" chosen.
5. Scroll to "integer" using the cursor buttons. "Integer" will have the option "medium" chosen.
6. Press the 3rd button of five. The word "medium" should change to "long".
7. Connect H_{cur} to the 5KA bus (Q2a/Q3 inner power lead as shown in figure).
8. Connect L_{cur} to Q2b/Q3 inner power lead as shown in figure.
9. Connect H_{pot} and L_{pot} buttons to voltage taps as shown below.
10. Read Ls and Q from display and record in traveler.

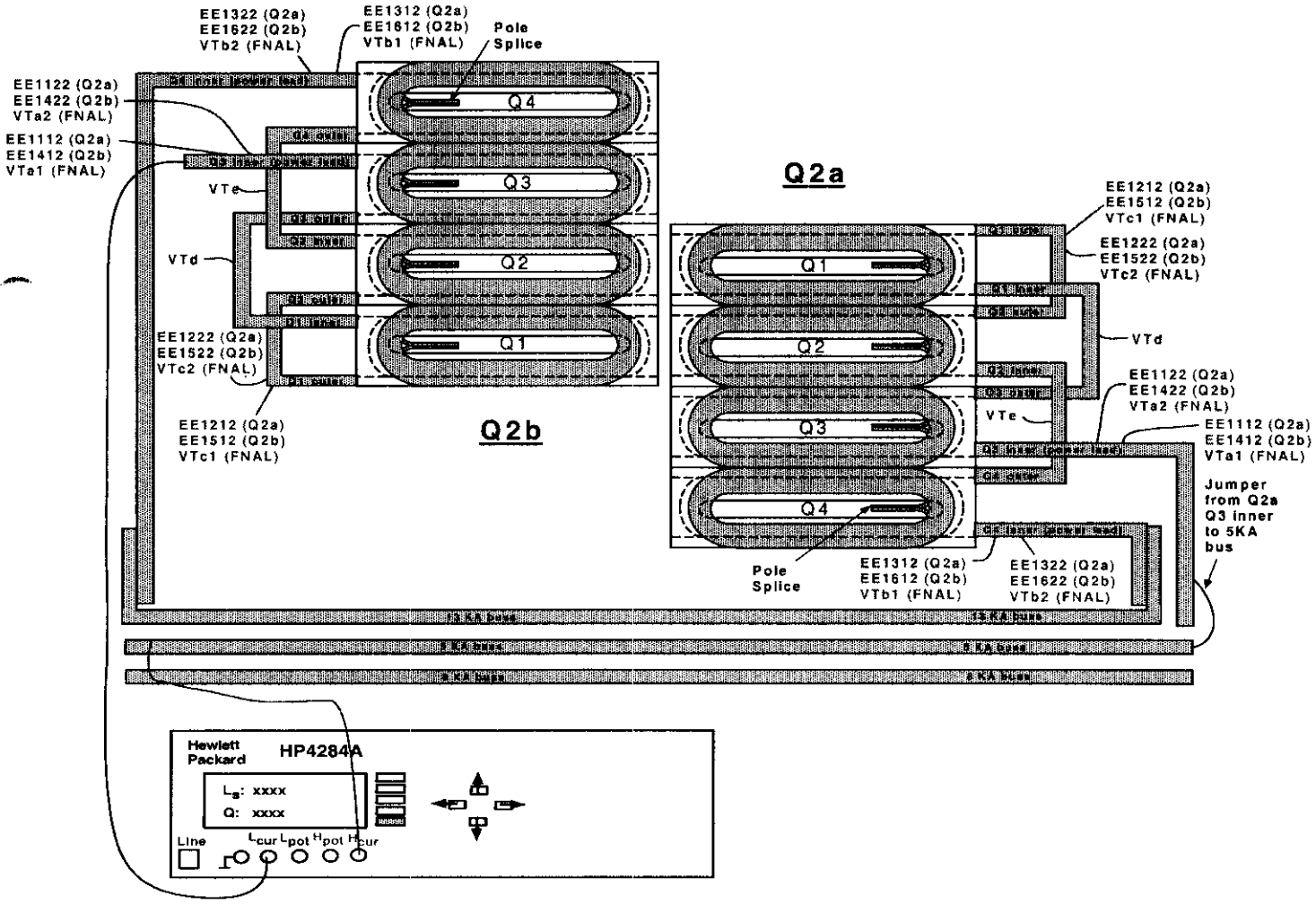

(Q2a) Inductance				Nominal ~ 2.880 to 2.935 mH
Voltage Tap Serial Numbers				Quadrant Total Inductance
Connect	Fermi	CERN	Quadrant	
H_{POT}	VTdQ2a	EMPTY	Quadrant 1	3.3049 mH
L_{POT}	VTc1Q2a	EE1212		
H_{POT}	VTc1Q2a	EE1212	Quadrant 2	3.2845 mH
L_{POT}	VTeQ2a	EMPTY		
H_{POT}	VTdQ2a	EMPTY	Quadrant 3	3.2510 mH
L_{POT}	VTa1Q2a	EE1112		
H_{POT}	VTeQ2a	EMPTY	Quadrant 4	3.3018 mH
L_{POT}	VTb1Q2a	EE1312		

H_{POT}	VTa1Q2a	EE1112	Total Cold Mass	Nominal ~ 13.3376 mH
L_{POT}	VTb1Q2a	EE1312		13.137 mH

(Q2a) Q-Factor				Nominal ~ 4.5 to 5.2
Voltage Tap Serial Numbers				Quadrant Total Q
Connect	Fermi	CERN	Quadrant	
H_{POT}	VTdQ2a	EMPTY	Quadrant 1	3.9
L_{POT}	VTc1Q2a	EE1212		
H_{POT}	VTc1Q2a	EE1212	Quadrant 2	3.9
L_{POT}	VTeQ2a	EMPTY		
H_{POT}	VTa1Q2a	EE1112	Quadrant 3	3.9
L_{POT}	VTdQ2a	EMPTY		
H_{POT}	VTeQ2a	EMPTY	Quadrant 4	3.9
L_{POT}	VTb1Q2a	EE1312		

H_{POT}	VTa1Q2a	EE1112	Total Cold Mass	Nominal ~ 5.036
L_{POT}	VTb1Q2a	EE1312		3.9

Technician(s) [illegible]

Date 4/23/04

To measure the resistance of a bussed Q2:

1. Use Valhalla Scientific 4300B digital micro-ohmmeter.
2. Set Test Current to 1 amp.
3. Set Scale to 2V full scale.
4. Turn temperature compensation on.
5. Turn test current off.
6. Put jumper between Q2a Q3 inner power lead and 5 KA bus as shown in figure.
7. Connect I_{HI} to the 5KA bus (Q2a Q3 inner power lead) as shown in figure.
8. Connect I_{LO} to the Q2b Q3 inner power lead as shown in figure.
9. Turn test current on.
10. Connect V_{HI} and V_{LO} buttons to voltage taps as shown below.
11. Read resistance and record in traveler.

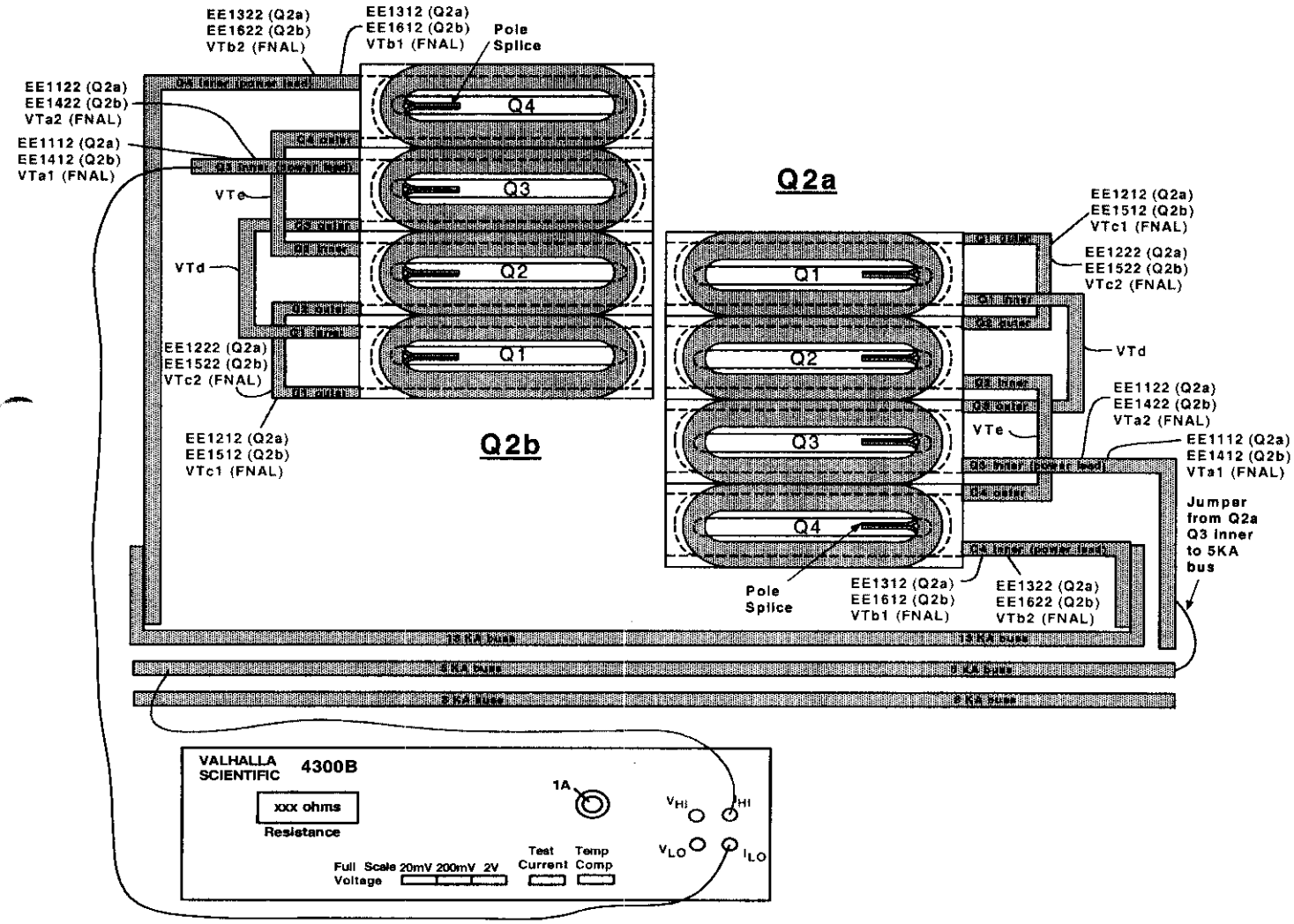

(Q2b) Resistance				Nominal ~ 560 to 585 mΩ
Voltage Tap Serial Numbers				Quadrant Total Resistance
Connect	Fermi	CERN	Quadrant	
V_{HI}	VTc1Q2b	EE1512	Quadrant 1	573.7 mΩ
V_{LO}	VTdQ2b	EMPTY		
V_{HI}	VTeQ2b	EMPTY	Quadrant 2	572.9 mΩ
V_{LO}	VTc1Q2b	EE1512		
V_{HI}	VTdQ2b	EMPTY	Quadrant 3	573.2 mΩ
V_{LO}	VTa1Q2b	EE1412		
V_{HI}	VTb1Q2b	EE1612	Quadrant 4	573.6 mΩ
V_{LO}	VTeQ2b	EMPTY		

V_{HI}	VTb1Q2b	EE1612	Total Cold Mass	Nominal ~ 2.305 Ω
V_{LO}	VTa1Q2b	EE1412		2.294 Ω

Technician(s) _____ Date 4/23/04

Check the resistance of the Redundant Voltage Taps.

Q2b Redundant Voltage Taps			
Connect	Fermi	CERN	Resistance
V_{HI}	VTc2Q2b	EE1522	1.146 Ω
V_{LO}	VTa2Q2b	EE1422	
V_{HI}	VTb2Q2b	EE1622	1.146 Ω
V_{LO}	VTc2Q2b	EE1522	

Technician(s) _____ Date 4/23/04

To measure Ls and Q of a Bussed Q2:

1. Use Hewlett Packard HP4284A digital LCR meter.
2. Turn line switch to on. The words "Measurement Display" should now be highlighted in the upper left corner of the display screen.
3. Use cursor buttons (shown in figure with arrows) to toggle down until "function" is highlighted near the upper left corner of the display screen.
4. Push the lowest of the five buttons to the right of display 3 times. (this button is shaded gray in the figure) The line in the display screen next to the second button down should now read "Ls-Q" and "function" near the upper left corner of the display should have the option "Ls-Q" chosen.
5. Scroll to "integer" using the cursor buttons. "Integer" will have the option "medium" chosen.
6. Press the 3rd button of five. The word "medium" should change to "long".
7. Connect H_{cur} to the 5KA bus (Q2a/Q3 inner power lead as shown in figure).
8. Connect L_{cur} to Q2b/Q3 inner power lead as shown in figure.
9. Connect H_{pot} and L_{pot} buttons to voltage taps as shown below.
10. Read Ls and Q from display and record in traveler.

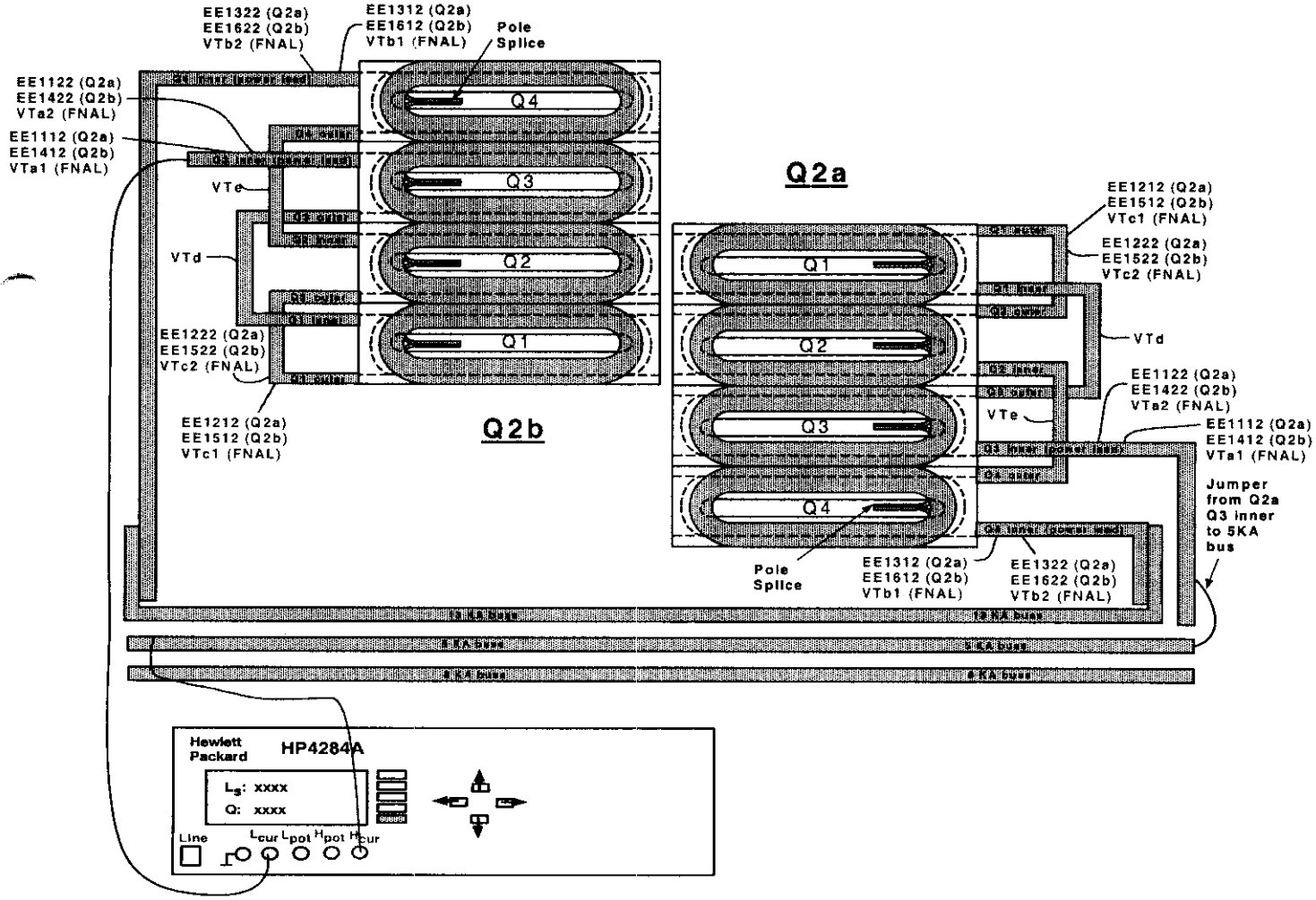

(Q2b) Inductance				Nominal ~ 2.880 to 2.935 mH
Voltage Tap Serial Numbers				Quadrant Total Inductance
Connect	Fermi	CERN	Quadrant	
H_{POT}	VTc1Q2b	EE1512	Quadrant 1	3.2946 mH
L_{POT}	VTdQ2b	EMPTY		
H_{POT}	VTeQ2b	EMPTY	Quadrant 2	3.3029 mH
L_{POT}	VTc1Q2b	EE1512		
H_{POT}	VTdQ2b	EMPTY	Quadrant 3	3.3005 mH
L_{POT}	VTa1Q2b	EE1412		
H_{POT}	VTb1Q2b	EE1612	Quadrant 4	3.2588 mH
L_{POT}	VTeQ2b	EMPTY		

H_{POT}	VTb1Q2b	EE1612	Total Cold Mass	Nominal ~ 13.3376 mH
L_{POT}	VTa1Q2b	EE1412		13.157 mH

(Q2b) Q-Factor				Nominal ~ 4.5 to 5.2
Voltage Tap Serial Numbers				Quadrant Total Q
Connect	Fermi	CERN	Quadrant	
H_{POT}	VTc1Q2b	EE1512	Quadrant 1	3.9
L_{POT}	VTdQ2b	EMPTY		
H_{POT}	VTeQ2b	EMPTY	Quadrant 2	3.9
L_{POT}	VTc1Q2b	EE1512		
H_{POT}	VTdQ2b	EMPTY	Quadrant 3	3.9
L_{POT}	VTa1Q2b	EE1412		
H_{POT}	VTb1Q2b	EE1612	Quadrant 4	4.0
L_{POT}	VTeQ2b	EMPTY		

H_{POT}	VTb1Q2b	EE1612	Total Cold Mass	Nominal ~ 5.036
L_{POT}	VTa1Q2b	EE1412		3.9

[illegible]
Technician(s)

4/23/04
Date

To measure the resistance of a Thermometer (RTD):

1. Use Hewlett Packard HP3457A digital multimeter.
2. Record temperature of building within +/- 5 degrees.
3. Press line button to turn line on.
4. Connect wires as shown in Figure below.
   U+ (Black) to Sense HI
   I+ (Yellow) to Input HI
   U- (Red) to Sense LO
   I- (Green) to Input LO
5. Push blue button (function key) once.
6. Push OHMF button.
7. Verify arrow in readout is above the 4WΩ (meaning a 4 wire resistance measurement).
8. Read resistance in ohms and record in traveler.

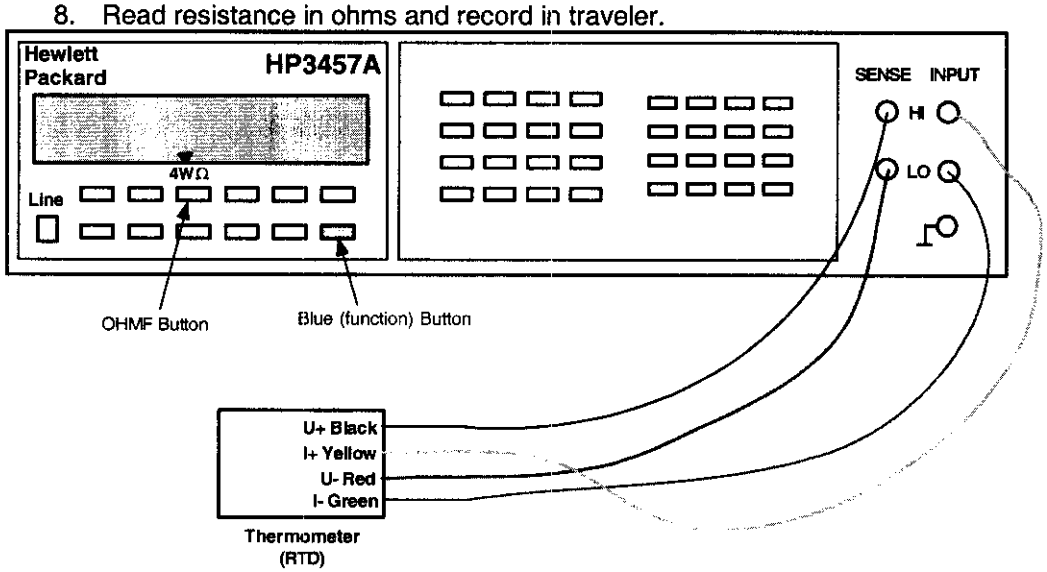

To measure the resistance of a Cryogenic (Warm-up) Heater

1. Use Hewlett Packard HP3457A digital multimeter.
2. Record temperature of building within +/- 5 degrees.
3. Press line button to turn line on.
4. Connect wires as shown in Figure below.
5. Push blue button (function key) once.
6. Push OHMF button.
7. Verify arrow in readout is above the 4WΩ (meaning a 4 wire resistance measurement).
   Note: Although this is technically a 4 wire measurement, it is effectively a 2 wire measurement, since there are only 2 wires connected to each heater.
8. Read resistance in ohms and record in traveler.

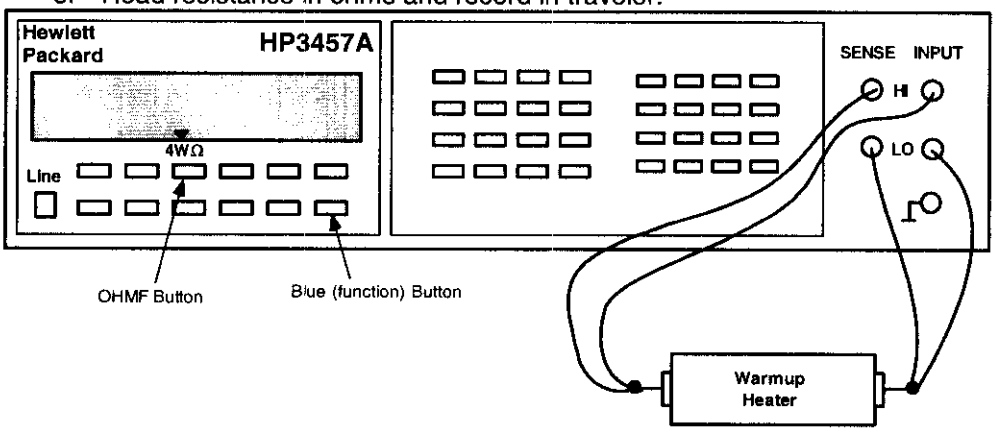

Q2a - RTD's and Cryogenic (warm-up) Heaters			
Temperature of Building (+/- 5°): _____			
Component	**Fermi**	**CERN**	**Resistance**
Q2a RTD, primary	TaQ2a	TT8312	58.380 Ω
Q2a RTD, redundant	TbQ2a	TT8322	60.092 Ω
Q2A Cryogenic (warm-up) Heater (LE) - wire toward cold mass end plate (CERN #1 I+)	W1aQ2A	EH8312+	18.1894 Ω
Q2A Cryogenic (warm-up) Heater (LE) - wire toward cold mass mag center (CERN #1 I-)	W2aQ2A	EH8312-	
Q2A Cryogenic (warm-up) Heater (Non-LE) - wire toward cold mass end plate (CERN #2 I+)	W1bQ2A	EH8322+	17.85 Ω
Q2A Cryogenic (warm-up) Heater (Non-LE) - wire toward cold mass mag center (CERN #2 I-)	W2bQ2A	EH8322-	

Technician(s) _____ Date 4/23/04

Q2b - RTD's and Cryogenic (warm-up) Heaters			
Temperature of Building (+/- 5°): _____			
Component	**Fermi**	**CERN**	**Resistance**
Q2b RTD, primary	TaQ2b	TT8332	58.656 Ω
Q2b RTD, redundant	TbQ2b	TT8342	61.648 Ω
Q2B Cryogenic (warm-up) Heater (LE) - wire toward cold mass end plate (CERN #1 I+)	W1aQ2B	EH8332+	17.42 Ω
Q2B Cryogenic (warm-up) Heater (LE) - wire toward cold mass mag center (CERN #1 I-)	W2aQ2B	EH8332-	
Q2B Cryogenic (warm-up) Heater (Non-LE) - wire toward cold mass end plate (CERN #2 I+)	W1bQ2B	EH8342+	17.80 Ω
Q2B Cryogenic (warm-up) Heater (Non-LE) - wire toward cold mass mag center (CERN #2 I-)	W2bQ2B	EH8342-	

Technician(s) _____ Date 4.23.04

Using the Hewlett Packard HP3457A digital multimeter, measure the Strip Heater Resistance for Q2a and Q2b.

Q2a Strip Heater Resistance				
Fermi	CERN	Description	Limit	Resistance
H1aQ2a	YT1112+	Circuit A	18.20 to 21 Ω	19.076 Ω
H2aQ2a	YT1112-			
H1bQ2a	YT1122+	Circuit B	18.20 to 21 Ω	18.8998 Ω
H2bQ2a	YT1122-			

Technician(s) _____ Date 4/23/04

Q2b Strip Heater Resistance				
Fermi	CERN	Description	Limit	Resistance
H1aQ2b	YT1132+	Circuit A	18.20 to 21 Ω	19.5308 Ω
H2aQ2b	YT1132-			
H1bQ2b	YT1142+	Circuit B	18.20 to 21 Ω	19.554 Ω
H2bQ2b	YT1142-			

Technician(s) _____ Date 4/23/04

15.2 Using the HP3457A, connect power thru the connector Power Leads (HA2 and HB2 to measure Q2-H2 or VA2 and VB2 to measure Q2-V2). Connect the Sense Leads as shown in table below and record resistance.

(Magnet Bus Leads)

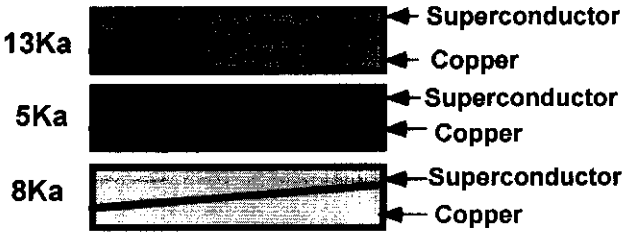

(Corrector Bus Leads)

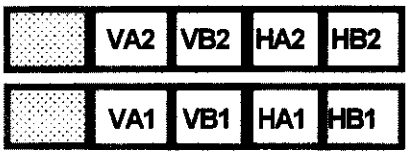

(View Looking into Q2b)

MCBX Corrector Coil Taps			
Component	**FermiLab Label**	**CERN Label**	**Resistance**
Q2-H2	**VTH2**	**EE8122**	.0073 Ω
	HA2	**N/A**	
Q2-V2	**VTV2**	**EE8112**	.0037 Ω
	VA2	**N/A**	

Technician(s) 4/23/04 Date

HGQ-0460
Jim Rise
6/2/04

XXX 15.3 Hipot according to table below. Hipot to 5kV. Maximum leakage is 3μA.

Hipot Heaters to Coil and Ground.

High Potential	Grounded	Floating	Leakage
All Strip Heaters	Coils, Yoke, Q1 Instrumentation Bus, Lead and Corrector Coil Busses, RTD's and Warm-up Heaters	Nothing	.574μA

Hipot Coil to Heaters and Ground.

High Potential	Grounded	Floating	Leakage
All Coils	Strip Heaters, Yoke, Q1 Instrumentation Bus, 8kA and 5kA Lead Busses and Corrector Coil Busses, RTD's and Warm-up Heaters	Nothing	.241nA

Technician(s) 4/23/04 Date

Responsible Authority/Physicist 4/23/04 Date

15.4 Check Q1 Instrumentation Bus Wires for Continuity.

Module	Pin	Fermi	CERN	KEK	Description	Done
M2	1	VTa1Q1	EE1111	a1	Q1 Lead Voltage Tap "a", primary	✓
M2	2	VTa2Q1	EE1121	a2	Q1 Lead Voltage Tap "a", redundant	✓
M2	3	VTc1Q1	EE1211	c1	Q1 Center Voltage Tap "c", primary	✓
M2	4	VTc2Q1	EE1221	c2	Q1 Center Voltage Tap "c", redundant	✓
M2	5	VTb1Q1	EE1311	b1	Q1 Lead Voltage Tap "b", primary	✓
M3	5	VTb2Q1	EE1321	b2	Q1 Lead Voltage Tap "b", redundant	✓
M5	1	VTH1	EE8121		Corrector voltage tap Q1-H1 (skew dipole) (on MCBX, MCBXH, A+ lead)	✓
M5	2	VTV1	EE8111		Corrector voltage tap Q1-V1 (normal dipole) (on MCBX, MCBXV A+ lead)	✓
M7	1	W1aQ1	EH8311+		Q1 Cryogenic Heater lead end - wire at top (CERN #1 I+)	✓
M7	2	W2aQ1	EH8311-		Q1 Cryogenic Heater lead end - wire at bottom (CERN #1 I-)	✓
M7	3	W1bQ1	EH8321+		Q1 Cryogenic Heater non-lead end - wire at top (CERN #2 I+)	✓
M7	4	W2bQ1	EH8321-		Q1 Cryogenic Heater non-lead end - wire at bottom (CERN #2 I-)	✓
M9	1	H1aQ1	YT1111+	HA1	Q1 Protection (Strip) Heater, ("a" circuit) (CERN lead #1+)	✓
M9	3	H2aQ1	YT1111-	HA2	Q1Protection (Strip) Heater, ("a" circuit) (CERN lead #1-)	✓
M9	5	H1bQ1	YT1121+	HB1	Q1 Protection (Strip) Heater, ("b" circuit) (CERN lead #2+)	✓
M10	4	H2bQ1	YT1121-	HB2	Q1 Protection (Strip) Heater, ("b" circuit) (CERN lead #2-)	✓
M12	1	TaQ1_I+	TT8311 I+		Q1 RTD, primary Wire color: Yellow	✓
M12	2	TaQ1_I-	TT8311 I-		Q1 RTD, primary Wire color: Green	✓
M12	3	TaQ1_V+	TT8311 U+		Q1 RTD, primary Wire color: Black	✓
M12	4	TaQ1_V-	TT8311 U-		Q1 RTD, primary Wire color: Red	✓
M12	5	TbQ1_I+	TT8321 I+		Q1 RTD, primary Wire color: Yellow	✓
M12	6	TbQ1_I-	TT8321 I-		Q1 RTD, primary Wire color: Green	✓
M12	11	TbQ1_V+	TT8321 U+		Q1 RTD, primary Wire color: Black	✓
M12	10	TbQ1_V-	TT8321 U-		Q1 RTD, primary Wire color: Red	✓

Technician(s) _____ Date 4/23/04

16.0 Production Complete

XXX 16.1 Process Engineering verify that the LHC Cold Mass Module Assembly Traveler (5520-TR-333643) is accurate and complete. This shall include a review of all steps to ensure that all operations have been completed and signed off. Ensure that all Discrepancy Reports, Nonconformance Reports, Repair/Rework Forms, Deviation Index and dispositions have been reviewed by the Responsible Authority for conformance before being approved.

Comments:

_____

_____

_____

_____

_____

_____

_____

_____

J. Krostak
Process Engineering/Designee

FEB 14 2005
Date

TD/ENGINEERING & FABRICATION

PARTS KIT REQUEST

ORIGINAL

IMPORTANT NOTES:
1) MAGNET NUMBER MUST BE FILLED IN.
2) ONLY ONE FORM PER MAGNET.
3) PARTS COORDINATOR OR DESIGNEE MUST SIGN THIS FORM.
4) MATERIAL CONTROL WILL ISSUE PARTS AND RECORD ROUTING NUMBER.
5) ANY QUANTITIES NOT AVAILABLE WILL HAVE COMMENTS RETURNED TO THE PARTS COORDINATOR FOR REVIEW.

DELIVER TO_____ICB

BUDGET CODE: LCI

PROJECT NUMBER: 300
TASK NUMBER: 1.1.1.3.3

MAGNET NUMBER: LMQXB05

RELEASED BY

PRODUCTION SIGNATURE: J. Szostak x2003

TODAYS DATE: 19-Nov-03

NEED DATE: 26-Nov-03

ISSUE VERIFICATION

MATERIAL CONTROL SIGNATURE: Marsha Schmidt

DATE ISSUED TO STOCKROOM: 11/21/03

THIS KIT LIST IS FOR

ME-369895	A	Q2 MODULE ASSEMBLY

PART NUMBER	REV	DESCRIPTION	REQUIRED QTY/ASS'Y	MATERIAL CONTROL: QTY FILLED OUT BY STOCK ROOM: ISSUED	ROUTE FORM	NOT AVAIL	FILLED OUT BY EXPEDITER: DATE AVAIL	COMMENTS TO PRODUCTION MANAGER	PROD VERIFY PART	SUPT. VERIFY PART
369655	C	Q2 MQXB PRODUCTION COLDMASS	ICB HAS				—			
369417	-	INSULATING VARNISH & ADHESIVE	A / R				—			
369802	-	INSULATED BEAM TUBE	ICB HAS				—			
369826	C	Q2 MODULE ASSEMBLY/INSULATED BUS ASSEMBLY	ICB HAS				—			
369835	A	RTD TEMPERATURE SENSOR	4 EA	4	79970		11/21/03	R2,S2,L5 41 pcs.		
369893	B	RTD MOUNTING BLOCK	4 EA	4	79174			IB4 Bin 62 pcs.		
369899	-	Q2 WIRE FEED-THRU CHANNEL	1 EA					P/N 5 pcs.		IB4
390112	B	Q2 TRANSITION AREA SLEEVE	1 EA		78283			P/N 5 pcs.		
390197	B	IP END DOME WELDMENT	1 EA	1	N/A			P/N 5 pcs.		
390203	-	MCBX CORRECTOR MOUNTING SPACER	4 EA	4	77194			IB4 Bin 20 pcs.		
390228	-	MCBX CORRECTOR MTG. FLAT WASHER	4 EA	4	77130			24 pcs.		
390230	A	TRANSPORTATION RESTRAINT ADJUSTING SCREW	4 EA	4	76669			23 pcs.		
390248	-	1/2 - 20 x 3.6" SILVER PLATED SCREW	4 EA	4	74633			34 pcs.		
390253	A	NON IP END DOME WELDMENT	1 EA	1	78330			P/N 5 pcs.		
390294	-	MCBX TRANSPORTATION RESTRAINT NUT	4 EA	4	76666			IB4 Bin 88 pcs.		
390300	B	BEAM TUBE FLANGE	2 EA	2	77028			R10,12 96 pcs.		
390312	-	MCBX CORRECTION COIL ASSEMBLY	ICB HAS				—			
390482	-	CORRECTOR SHIM, 0.002"	4 EA	4	79123		11/21/03	R2,S2,L4 141 pcs.		
390483	-	CORRECTOR SHIM, 0.005"	4 EA	4	79124			144 pcs.		
390484	-	CORRECTOR SHIM, 0.010"	4 EA	4	79125			127 pcs.		
390485	-	CORRECTOR SHIM, 0.015"	4 EA	4	79126			116 pcs.		
393029	-	1/4 - 28 x 1" HEX SHCS, S.S.	16 EA	16	77851		11/21/03	IB4 Bin 1316 pcs.		
393030	-	#10 - 32 x 0.188" CUP POINT SET SCREW, S.S.	8 EA	8	77839			60 pcs.		
393180	-	SHCS M4 x 10mm SS	8 EA	8	79519			2173 pcs.		

RETURN THIS COMPLETED PARTS KIT REQUEST WITH THE ISSUED PARTS TO THE PARTS COORDINATOR.

[signature] 11/21/03 : STOCKROOM SIGNATURE AND DATE

TRAVELER NO. TR-333643

KIT IS COMPLETE (PARTS COORDINATOR SIGNATURE) John J. Szostak BADGE # 02943C DATE 11/25/03

TD/ENGINEERING & FABRICATION

PARTS KIT REQUEST

ORIGINAL

IMPORTANT NOTES:
1) MAGNET NUMBER MUST BE FILLED IN.
2) ONLY ONE FORM PER MAGNET.
3) PARTS COORDINATOR OR DESIGNEE MUST SIGN THIS FORM.
4) MATERIAL CONTROL WILL ISSUE PARTS AND RECORD ROUTING NUMBER.
5) ANY QUANTITIES NOT AVAILABLE WILL HAVE COMMENTS RETURNED TO THE PARTS COORDINATOR FOR REVIEW.

MAGNET NUMBER: LMQXB05

RELEASED BY

PRODUCTION SIGNATURE: J. Szostak x2003

TODAYS DATE: 19-Nov-03

NEED DATE: 26-Nov-03

DELIVER TO_____ICB

BUDGET CODE: LCI

PROJECT NUMBER: 300
TASK NUMBER: 1.1.1.3.3

ISSUE VERIFICATION

MATERIAL CONTROL SIGNATURE: Marsha Fehrenbach

DATE ISSUED TO STOCKROOM: 11/21/03

THIS KIT LIST IS FOR

ME-369895	A	Q2 MODULE ASSEMBLY

PART NUMBER	REV	DESCRIPTION	REQUIRED QTY/ASS'Y		MATERIAL CONTROL: QTY FILLED OUT BY STOCK ROOM: ISSUED	ROUTE FORM	NOT AVAIL	FILLED OUT BY EXPEDITER: DATE AVAIL	COMMENTS TO PRODUCTION MANAGER	PROD VERIFY PART	SUPT. VERIFY PART
369829	*	WARM UP HEATER BASE PLATE	4	EA	4	79120		11/21/03	IB4 Bin - 48 pcs.		
369834	A	WARM UP HEATER	4	EA	4	79219			49 pcs.		
369867	*	BUS HOUSING EXTENSION	1	EA	1	78975			5 pcs.		
369870	B	Q2 BUS HOUSING LOCK	1	EA	1	79689			[redacted] pcs.		
369872	B	Q2A BUS HOUSING EXTENSION	1	EA	1	79597			R1, S3, L2 4 pcs.		
369873	A	Q2A BUS HOUSING EXTENSION BASE	1	EA	1	78993			R1, S1, L3 5 pcs.		
369874	A	Q2 BUS HOUSING EXTENSION COVER	2	EA	2	79578			R2, S2, L4 10 pcs.		
369890	*	6-32 x 1" SHCS S.S.	14	EA	14	79050			IB4 Bin - 423 pcs.		
369892	A	BUS HOUSING END SUPPORT	2	EA	2	79579			R1, S1, L3 - 10 pcs.		
369937	*	Q2 LOCK-INSTRUMENTATION BUS CHANNNEL	1	EA	1	78587			IB4 Bin - 5 pcs.		
369938	*	SHCS 4-40 x 1/4" S.S.	8	EA	8	79032			164 pcs.		
369981	*	LEAD SPLICE CABLE CLAMP ASSEMBLY	2	EA	2	79619			10 pcs.		
393178	*	SHCS 1/4-20 x 1.25"	8	EA	8	79652			84 pcs.		
393179	*	SHCS 1/4-20 x 1/2" S.S.	14	EA	14	79629			169 pcs.		
393181	*	PLAIN FLAT WASHER M4#6	8	EA	8	79519			180 pcs.		
430013	*	Q2A LEAD SPLICE END TRIANGLE	1	EA	1	80289			R1, 1, 2 6 pcs.		
390671	A	FACE PLATE FOR CORRECTION LEADS	1	EA	1	80652			R1, 2, 4 15 pcs.		

RETURN THIS COMPLETED PARTS KIT REQUEST WITH THE ISSUED PARTS TO THE PARTS COORDINATOR.

[signature] 11/25/03 : STOCKROOM SIGNATURE AND DATE

TRAVELER NO. TR-333643

KIT IS COMPLETE (PARTS COORDINATOR SIGNATURE): [signature] BADGE # 052943C DATE 11/25/03

Cryogenic Thermometer Traveller

DESCRIPTION*

Part Description:	Cryogenic thermometer	Instrument Name:	LMQXB05
CERN Part Identifier:	HCQITESCXT-CR024560	Top Assembly:	
Other Identification:	CX_LS_X19146	Functional Equipment Identifier:	

* In accordance with LHC-QIT-QA-0002

CABLING

Connector Tag Name: TT8312

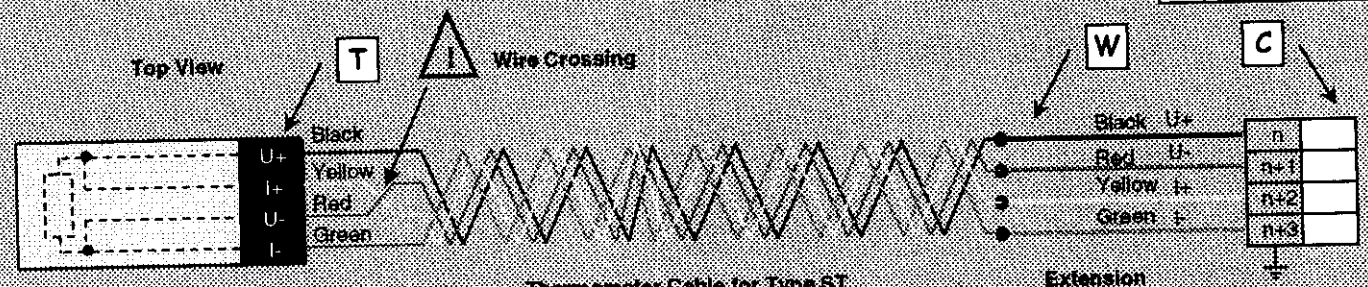

Fixing Case
- Thread ☐
- Hole ☐
- Stud ☐

Thermometer Cable for Type ST
- ρ (300 K) = 0.32 Ohm/m
- Copper AWG 30
- Length = ☐ m

Extension
- ρ (300 K) = 0.07 Ohm/m
- Copper AWG 24
- Length: 9cm

CHECKS

Intervention	Date/ DD-MMM-YYYY	Check Point	R(U+,U-,I+,I-) [Ohm] 4W	R(U-,I-) [Ohm] 2W	R(U+,I+) [Ohm] 2W	R(U+,GND) [Ohm] 2W	Temperature [K]	Firm/Laboratory	Checked by
Calibration	14-May-2002	T	58.21	0.10	0.10	OVL	300.00	IPN	Joly
Expedition	05-Nov-2003	T	56.58	0.10	0.10	OVL	294.00	CERN	Vauthier
Reception	26JAN04	T W C	58.458				68°F	Fermi	Gould
		T W C							
		T W C							
		T W C							
		T W C							
		T W C							
		T W C							
		T W C							
		T W C							
		T W C							
		T W C							
		T W C							
		T W C							
		T W C							
		T W C							
		T W C							
		T W C							
		T W C							
		T W C							
		T W C							
		T W C							
		T W C							
		T W C							
		T W C							

In Case of problem, do not hesitate to contact Responsible person at CERN. Tel:+41 22 767 4266

Cryogenic Thermometer Traveller

DESCRIPTION*

Part Description:	Cryogenic thermometer	Instrument Name:	LMQXB05
CERN Part Identifier:	HCQITESCXT-CR024580	Top Assembly:	
Other Identification:	QX_LS_X19148	Functional Equipment Identifier:	

* In accordance with LHC-QIT-QA-0002

CABLING

Connector Tag Name: TT8322

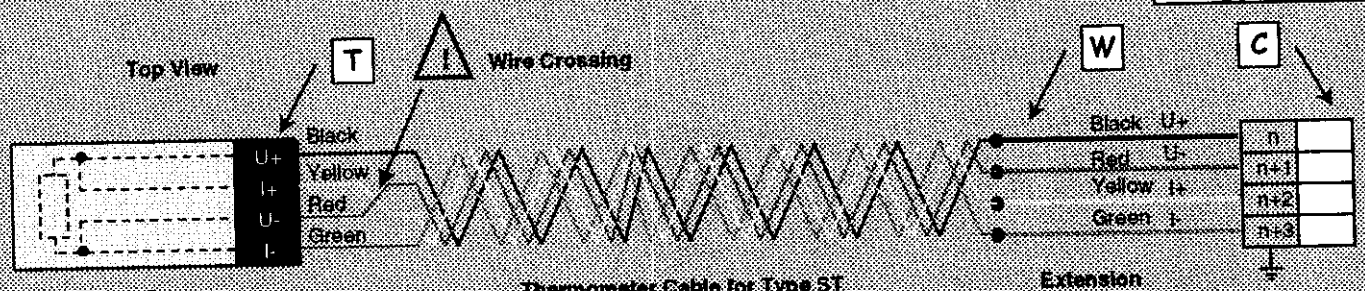

Fixing Case
- Thread ☐
- Hole ☐
- Stud ☐

Thermometer Cable for Type ST
- ρ (300 K) = 0.32 Ohm/m
- Copper AWG 30
- Length = ☐ m

Extension
- ρ (300 K) = 0.07 Ohm/m
- Copper AWG 24
- Length: 9cm

CHECKS

Intervention	Date/ DD-MMM-YYYY	Check Point	R(U+,U-,I+,I-) [Ohm] 4W	R(U-,I-) [Ohm] 2W	R(U+,I+) [Ohm] 2W	R(U+,GND) [Ohm] 2W	temperature [K]	Firm/Laboratory	Checked by
Calibration	14-May-2002	T [redacted]	59.95	0.10	0.10	OVL	300.00	IPN	Joly
Expedition	05-Nov-2003	T [redacted]	58.23	0.10	0.10	OVL	294.00	CERN	Vauthier
Reception	26 Jan 04	T W C	60.174				68°F	Fermi	Gould
		T W C							
		T W C							
		T W C							
		T W C							
		T W C							
		T W C							
		T W C							
		T W C							
		T W C							
		T W C							
		T W C							
		T W C							
		T W C							
		T W C							
		T W C							
		T W C							
		T W C							
		T W C							
		T W C							
		T W C							
		T W C							
		T W C							
		T W C							

In Case of problem, do not hesitate to contact Responsible person at CERN. Tel:+41 22 767 4266

Cryogenic Thermometer Traveller

DESCRIPTION

Part description:	Cryogenic thermometer	**Top Assembly Identification:**	LMQXB05
Part Identification:	HCQITESCXT-CR012290	**Manufactured By:**	Fermilab
Serial Number:	CX_LS_X16751		

CABLING

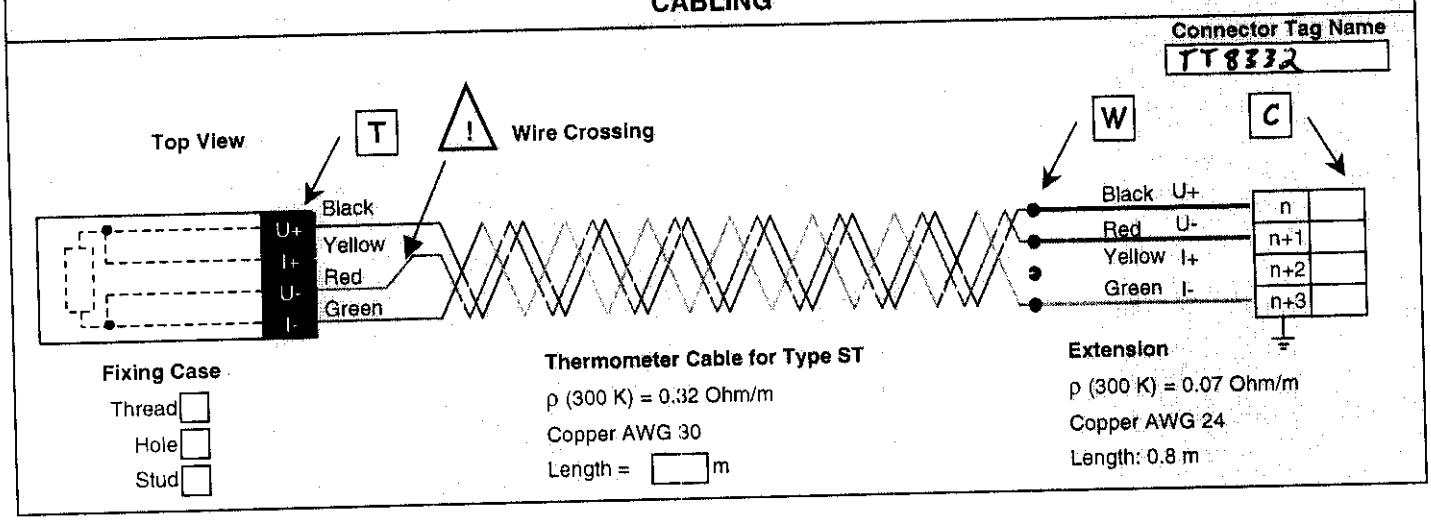

CHECKS

Intervention	Date/ DD-MMM-YYYY	Check Point	R(U+,U-,I+,I-) [Ohm] 4W	R(U-,I-) [Ohm] 2W	R(U+,I+) [Ohm] 2W	R(U+,GND) [Ohm] 2W	Temperature [K]	Firm/Laboratory	Checked by
Calibration	21-Jan-2002	T	68.13	n.a	n.a	OVL	Ambient	IPN	Joly
Expedition	12-Mar-2003	T	66.612	0.1	0.1	OVL	293	CERN	Grivat
Reception	26 JAN 04	T W C	68.617				68°F	Fermi	Gould
		T W C							
		T W C							
		T W C							
		T W C							
		T W C							
		T W C							
		T W C							
		T W C							
		T W C							
		T W C							
		T W C							
		T W C							
		T W C							
		T W C							
		T W C							
		T W C							
		T W C							
		T W C							
		T W C							
		T W C							
		T W C							
		T W C							

Cryogenic Thermometer Traveller

DESCRIPTION*

Part Description:	Cryogenic thermometer	Instrument Name:	LMQXB05
CERN Part Identifier:	HCQITESCXT-CR024570	Top Assembly:	
Other Identification:	QX_LS_X19147	Functional Equipment Identifier:	

* In accordance with LHC-QIT-QA-0002

CABLING

Connector Tag Name: TT8342

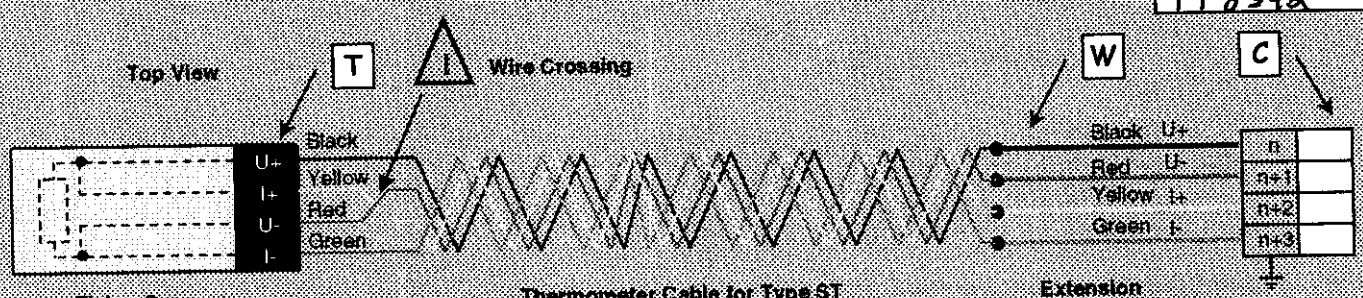

Fixing Case
Thread ☐
Hole ☐
Stud ☐

Thermometer Cable for Type ST
ρ (300 K) = 0.32 Ohm/m
Copper AWG 30
Length = ☐ m

Extension
ρ (300 K) = 0.07 Ohm/m
Copper AWG 24
Length: 8cm

CHECKS

Intervention	Date/ DD-MMM-YYYY	Check Point	R(U+,U-,I+,I-) [Ohm] 4W	R(U-,I-) [Ohm] 2W	R(U+,I+) [Ohm] 2W	R(U+,GND) [Ohm] 2W	Temperature [K]	Firm/Laboratory	Checked by
Calibration	14-May-2002	T [redacted]	61.30	0.10	0.10	OVL	300.00	IPN	Joly
Expedition	05-Nov-2003	T [redacted]	59.84	0.10	0.10	OVL	294.00	CERN	Vauthier
Reception	26 JAN 04	T W C	61.703				68°F	Fermi	Gould
		T W C							
		T W C							
		T W C							
		T W C							
		T W C							
		T W C							
		T W C							
		T W C							
		T W C							
		T W C							
		T W C							
		T W C							
		T W C							
		T W C							
		T W C							
		T W C							
		T W C							
		T W C							
		T W C							
		T W C							
		T W C							

Traveler Title:	Specification No:	Revision:	DR No:
Q2 LMQXB Cold Mass Module Assembly Traveler	5520-TR-333643	B	HGQ-0443

Step No:	Drawing No:	Routing Form No:	Serial No:	Rework ID:
8.0	369895		LMQXB05	0

Discrepancy Description:

While doing the electrical, the Q2A magnet was not getting any legible readings.The three voltage taps(EE1212, EE1222,EE1322), were not getting readings also.

Originator: Steve Gould

Date: 1/29/2004

Cause of Nonconformance:

Wire length affected the electronic measuring equipment.

Responsible Authority: Fred Nobrega

Date: 4/6/2004

Disposition:

Procedure & traveler changed to measure each magnet separately.

Responsible Authority: Fred Nobrega

Date: 4/6/2004

Corrective Action to Prevent Recurrence:

Follow new procedure. (TRR No. 1578)

Responsible Authority: Fred Nobrega

Date: 4/6/2004

Corrective Action/Disposition Verified By: John Szostak

Date: 12/6/2004

Will Configuration be affected?: ☐ YES ☑ NO

Identified problem area:

☐ Material ☐ Manpower ☑ Method ☐ Machine ☐ Measurement

Reviewed By: Bob Jensen

Date: 12/6/2004

Revision Request Control Number: 1578

Specification Number: 5520 - TR - 333643 Current Revision: A

Traveler or Document Title Q2 LMQXB Cold Mass Module Assembly Traveler

Step #/Description of Revision:

6.11 Added Step. "Perform a Stretched Wire Verification Measurement."
7.1 Removed Step. "Obtain Lead Bus (ME-369825). Inspect Bus for damaged or broken areas. Clean Bus using lint free Heavy Duty Wipers (Fermi stock 1660-0150) and Isopropyl Alcohol (Fermi stock 1920-0300)." Moved to Q2 Insulated Bus Assembly Traveler (333721) per LMQXB04. Step 5.3
7.2 Removed Step. "Obtain parts for Bus Assembly (ME-369826) and assemble per Q2 Module Assembly Insulated Bus Assembly (ME-369826)." Moved to Q2 Insulated Bus Assembly Traveler (333721) per LMQXB04. Step 5.4
7.3 Removed Step. "Verify Bus Assembly (ME-369826) is assembled correctly per Q2 Module Assembly Insulated Bus Assembly (ME-369826)." Moved to Q2 Insulated Bus Assembly Traveler (333721) per LMQXB04. Step 5.5
7.4 Removed Step. "Hipot the 5kA Lead Bus to the 8kA and 13 kA Lead Busses on table before inserting into magnets. Power the 5kA bus to 5000V and ground the 13kA Lead Bus and the 8kA Lead Bus.(Max. Leakage < 0.5A)." Moved to Q2 Bus Assembly Traveler (333721) per LMQXB04. Step 5.6
7.5 Removed Step. "Hipot the Corrector Magnet (MD-390312) Busses at 5kV before inserting into magnet in both the parallel and checkerboard configurations as shown below. Corrector Wires not shaded should be at high potential, while those shaded should be connected to each other and grounded. (Max. Leakage < 0.5mA)" Moved to Q2 Bus Assembly Traveler (333721) per LMQXB04. Step 5.7
7.22 Modified Step. Added a "Floating" Column Header to Table 7.22 and "RTD's and Warm-up Heaters" in that column.
7.23 Modified Step. Added Note. "All wires in this table have been previously soldered to the Magnet except for the Cryogenic (warm-up) Heater Wires." Modified Table 7.23. Added CERN Labels per Rodger Bossert. Added Technician Signoff per LQXB04.
7.27 Modified Step. Added "Attach Instrumentation Bus Channel Lock(MB-369937) to Q2b Non Lead End as per Q2 Module Assembly(ME-369895, page 4 of 4)"
7.30 Modified Step. Changed resistance check of RTD's and Warm-up Heaters per Rodger Bossert. New Step 7.25.
7.31 Modified Step. Changed hipot of RTD's and Warm-up Heaters per Rodger Bossert. New Step 7.26.
8.0 Modified Step. Changed electrical procedure specifications per Rodger Bossert. Added new tables with CERN Labels and new pictures.
11.3 Modified Step. Changed to "Install Spider Assembly (MC-430044) to protect wires." Removed checkboxes and added Responsible Authority signoff.

John Szostak	Jim Rife	10/27/2003
Originator	Responsible Authority	Date
Revision Incorporated into the Traveler:	John Szostak	1/15/2004
	Revision Incorporated By	Date
Process Engineering Final Review:	Bob Jensen	1/15/2004
	Process Engineering/Designee	Date

Disposition:

Use the dome as-is.

Responsible Authority: Thomas Page

Date: 2/2/2004

Corrective Action to Prevent Recurrence:

N/A

Responsible Authority: Thomas Page

Date: 2/2/2004

Corrective Action/Disposition Verified By: John Szostak

Date: 7/6/2004

Will Configuration be affected?: ☐ YES ☑ NO

Identified problem area:

☑ Material ☐ Manpower ☐ Method ☐ Machine ☐ Measurement

Reviewed By: Bob Jensen

Date: 7/23/2004

Traveler Title:	Specification No:	Revision:	DR No:
Q2 LMQXB Cold Mass Module Assembly Traveler	5520-TR-333643	B	HGQ-0446

Step No:	Drawing No:	Routing Form No:	Serial No:	Rework ID:
10.3	390309		LMQXB05	0

Discrepancy Description:

While inserting the beamtube, it was damaged at the Non-Ip end. It was hipotted and it passed.

Originator: Steve Gould

Date: 2/2/2004

Cause of Nonconformance:

Beam tube insulation was caught on something in the cold mass approximately 4-5 ft from the lead end of Q2B. This resulted in the insulation on the beam tube being torn. The tear was about 1 inch long.

Responsible Authority: Thomas Page

Date: 2/2/2004

Disposition:

Carefully remove the torn insulation and wrap with kapton tape apporximately two turns. Tie kevlar strings around both ends of the new kapton wrap.

Responsible Authority: Thomas Page

Date: 2/2/2004

Corrective Action to Prevent Recurrence:

This is a diffcult problem to predict and prevent. One doesn't know this is going to happen until the beam tube is inserted. No Traveler Change.

Responsible Authority: Thomas Page

Date: 2/2/2004

Corrective Action/Disposition Verified By: John Szostak

Date: 7/6/2004

Will Configuration be affected?: ☐ YES ☑ NO

Identified problem area:

☐ Material ☐ Manpower ☑ Method ☐ Machine ☐ Measurement

Reviewed By: Bob Jensen

Date: 12/6/2004

Traveler Title:	Specification No:	Revision:	DR No:
Q2 LMQXB Cold Mass Module Assembly Traveler	5520-TR-333643	B	HGQ-0459

Step No:	Drawing No:	Routing Form No:	Serial No:	Rework ID:
13.4	ME-369895		LMQXB05	0

Discrepancy Description:

Instrumentation wires at Q2b end are shorter than the print calls out. Print calls for 42.7" , actual length is approx 35".

JAN 20 2005

Originator: Damon Bice

Date: 4/20/2004

Cause of Nonconformance:

Unknown.

Responsible Authority: Rodger Bossert

Date: 12/27/2004

Disposition:

Wires are shorter than standard, but will be acceptable.

Responsible Authority: Rodger Bossert

Date: 12/27/2004

Corrective Action to Prevent Recurrence:

None required. Future parts will be made per print. No traveler change.

Responsible Authority: Rodger Bossert

Date: 12/27/2004

Corrective Action/Disposition Verified By: John Szostak

Date: 1/18/2005

Will Configuration be affected?: ☐ YES ☑ NO

Identified problem area:

☑ Material ☐ Manpower ☐ Method ☐ Machine ☐ Measurement

Reviewed By: Bob Jensen

Date: 1/20/2005

Traveler Title:	Specification No:	Revision:	DR No:
Q2 LMQXB Cold Mass Module Assembly Traveler	5520-TR-333643	B	HGQ-0460

Step No:	Drawing No:	Routing Form No:	Serial No:	Rework ID:
15.3	369895		LMQXB05	0

Discrepancy Description:

During the coil to ground hipot after the hypertronics installation, it failed at 4732V. The error message on the hipotter said it was over current.

Originator: Steve Gould

Date: 4/23/2004

Cause of Nonconformance:

Cause unknown.

Responsible Authority: Jim Rife

Date: 4/29/2004

Disposition:

Coil to ground hipot was redone, with physicist and tech monitoring leakage current. Overcurrent did not occur. Leakage current was quite low.

Responsible Authority: Jim Rife

Date: 4/29/2004

Corrective Action to Prevent Recurrence:

No corrective action suggested. Technicians should continue to visually monitor leakage current during test and inform physicist when hipot trips.

Responsible Authority: Jim Rife

Date: 4/29/2004

Corrective Action/Disposition Verified By: John Szostak

Date: 7/7/2004

Will Configuration be affected?: ☐ YES ☑ NO

Identified problem area:

☐ Material ☐ Manpower ☐ Method ☐ Machine ☑ Measurement

Reviewed By: Bob Jensen

Date: 7/7/2004

Revision Request Control Number: 1602

Specification Number: 5520 - TR - 333643 Current Revision: B

Traveler or Document Title Q2 LMQXB Cold Mass Module Assembly Traveler

Step #/Description of Revision:

1.4 Removed Step. "All personnel performing steps in this traveler must have documented training for this traveler and associated operating procedures."
7.26 Modified Step. Modified table. Removed row to record Temperature of Building (+/- 5°). Not necessary for hipots.
7.30 Added Step. "Ensure that the MCBX Corrector Magnet (MD-390312) is against the Mount Hardware and the bolts are "snug", before leveling and rotating."
7.36 Added Step "Attach Voltage Tap Wires to Corrector Magnet (MD-390312) as per Q2 Module Assembly (ME-369895)."
10.12 Modified Step. Changed to "Hipot the Beam Tube to coil, heaters and ground. (5kV) (Max. Leakage < 0.5mA)."
11.14 Added Step. "Undo Clamps."
11.15 Added Step. "Perform a stretched wire measurement of the system to align the Cold Mass within ± .2 mR"

John Szostak	Jim Rife	1/28/2004
Originator	Responsible Authority	Date
Revision Incorporated into the Traveler:	John Szostak	4/4/2004
	Revision Incorporated By	Date
Process Engineering Final Review:	Bob Jensen	4/7/2004
	Process Engineering/Designee	Date

Instructions for the completion of the Revision Request Form

Note(s):

Multiple steps may be effected by one Revision Request Form but only one specific Traveler or Document may be effected by each Revision Request Form.

If completing this form by hand, a Revision Request Control Number must be obtained before processing.

If completing this form entirely by electronic means, the printed copy to be filed in the Process Engineering Office is to be initialed by the individual incorporating the Revision Request and the individual who reviewed the Traveler or Document.

Originator Instructions:

1) Specification Number: - Enter the Specification Number of the Traveler or Document to be revised. (Document title is inserted automatically from the spec. #)

2) Current Revision: - Enter the Revision of the Traveler or Document to be revised.

3) Step# / Description of the Revision: - Enter a description of the revision to be made and the step# it applies to, if applicable. If needed to describe the revision attach a copy of the page(s). If the revision is coming from a related document such as a Discrepancy Report or an Engineering Order attach a copy of that document to the Revision Request Form.

4) Originator: - Originator is the person generating the form. (Select Name from List)

5) Responsible Authority: - Responsible Authority is person responsible for the process in question. (Select Name from List)

Process Engineering Office Instructions:

1) Revision Incorporated into the Traveler: - Signature of the individual who incorporated the revision.

2) Process Engineering Final Review: - Review the Traveler or Document revised, sign and date the form. The original completed Revision Request Form will be retained by the Process Engineering Office in the Revision Request Binder.

Revision Request Control Number: 1659

Specification Number: 5520 - TR - 333643 Current Revision: D

Traveler or Document Title Q2 LMQXB Cold Mass Module Assembly Traveler

Step #/Description of Revision:

5.2 Modified Step. Changed + / - 2 mm to +4 / -0 per LMQXB07.
7.17 Modified Step. Added "Have Crew Chief verify setup and sign below before continuing." per Jim Rife.
8.0 Modified Electrical Inspection per Rodger Bossert.
8.2 Modified Step. Added Picture of Corrector Bus Leads. Modified Table.
10.3 Added Step. "Prepare the Beam Tube insertion area with .003" Kapton Tape."
13.0 Modified Electrical Inspection per Rodger Bossert.
13.2 Modified Step. Added Picture of Corrector Bus Leads. Modified Table.
15.0 Modified Electrical Inspection per Rodger Bossert.
15.2 Modified Step. Added Picture of Corrector Bus Leads. Modified Table.

John Szostak	Jim Rife	8/3/2004
Originator	Responsible Authority	Date
Revision Incorporated into the Traveler:	John Szostak	12/15/2004
	Revision Incorporated By	Date
Process Engineering Final Review:	Bob Jensen	12/15/2004
	Process Engineering/Designee	Date

Instructions for the completion of the Revision Request Form

Note(s):

Multiple steps may be effected by one Revision Request Form but only one specific Traveler or Document may be effected by each Revision Request Form.

If completing this form by hand, a Revision Request Control Number must be obtained before processing.

If completing this form entirely by electronic means, the printed copy to be filed in the Process Engineering Office is to be initialed by the individual incorporating the Revision Request and the individual who reviewed the Traveler or Document.

Originator Instructions:

1) Specification Number: - Enter the Specification Number of the Traveler or Document to be revised. (Document title is inserted automatically from the spec. #)

2) Current Revision: - Enter the Revision of the Traveler or Document to be revised.

3) Step# / Description of the Revision: - Enter a description of the revision to be made and the step# it applies to, if applicable. If needed to describe the revision attach a copy of the page(s). If the revision is coming from a related document such as a Discrepancy Report or an Engineering Order attach a copy of that document to the Revision Request Form.

4) Originator: - Originator is the person generating the form. (Select Name from List)

5) Responsible Authority: - Responsible Authority is person responsible for the process in question. (Select Name from List)

Process Engineering Office Instructions:

1) Revision Incorporated into the Traveler: - Signature of the individual who incorporated the revision.

2) Process Engineering Final Review: - Review the Traveler or Document revised, sign and date the form. The original completed Revision Request Form will be retained by the Process Engineering Office in the Revision Request Binder.

Revision Request Control Number: 1636

Specification Number: 5520 - TR - 333643 Current Revision: C

Traveler or Document Title Q2 LMQXB Cold Mass Module Assembly Traveler

Step #/Description of Revision:

7.23 Modified Step. Changed to "Install Warm-up Heaters (ME-369834) to the Lead Ends and Non-Lead Ends of Q2a and Q2b as per Q2 Module Assembly (ME-369895)." Per LMQXB06.
7.26 Modified Step. Changed Max Leakage Current to < .5 mA. Added "Use Droege Serial No. 910 (FNAL Part No. 51330) or equivalent." Modified Tables.
8.1 Modified Step. Added new method of measuring Ls &Q per Rodger Bossert.
8.4 Modified Step. Added Responsible Authority signoff per LMQXB06.
9.4 Removed Step. Moved to 9.1.
9.10 Removed Step. Moved to new 9.6.
11.0 Added Note. "Ensure that a protective sleeve is placed inside the bellows between the convolutions and the bracket to prevent damage to the convolutions." per DR No. HGQ-0423.
11.3 Removed Step. "Install Spider Assembly (MC-430044) to protect wires." Per LMQXB06/Rodger Bossert.
13.1 Modified Step. Added new method of measuring Ls &Q per Rodger Bossert.
13.3 Modified Step. Added "Have Crew Chief verify setup and sign below before continuing."
13.4 Modified Step. Added Responsible Authority signoff per LMQXB06.
14.2 Modified Step. Added Technician Signoff per LMQXB06.
15.1 Modified Step. Added new method of measuring Ls &Q per Rodger Bossert.
15.3 Modified Step. Modified Table.

Damon Bice	Jim Rife	5/17/2004
Originator	Responsible Authority	Date
Revision Incorporated into the Traveler:	John Szostak	7/14/2004
	Revision Incorporated By	Date
Process Engineering Final Review:	Jamie Blowers	7/14/2004
	Process Engineering/Designee	Date

Instructions for the completion of the Revision Request Form

Note(s):

Multiple steps may be effected by one Revision Request Form but only one specific Traveler or Document may be effected by each Revision Request Form.

If completing this form by hand, a Revision Request Control Number must be obtained before processing.

If completing this form entirely by electronic means, the printed copy to be filed in the Process Engineering Office is to be initialed by the individual incorporating the Revision Request and the individual who reviewed the Traveler or Document.

Originator Instructions:

1) Specification Number: - Enter the Specification Number of the Traveler or Document to be revised. (Document title is inserted automatically from the spec. #)

2) Current Revision: - Enter the Revision of the Traveler or Document to be revised.

3) Step# / Description of the Revision: - Enter a description of the revision to be made and the step# it applies to, if applicable. If needed to describe the revision attach a copy of the page(s). If the revision is coming from a related document such as a Discrepancy Report or an Engineering Order attach a copy of that document to the Revision Request Form.

4) Originator: - Originator is the person generating the form. (Select Name from List)

5) Responsible Authority: - Responsible Authority is person responsible for the process in question. (Select Name from List)

Process Engineering Office Instructions:

1) Revision Incorporated into the Traveler: - Signature of the individual who incorporated the revision.

2) Process Engineering Final Review: - Review the Traveler or Document revised, sign and date the form. The original completed Revision Request Form will be retained by the Process Engineering Office in the Revision Request Binder.

CERN
CH-1211 Geneva 23
Switzerland

the **Large Hadron Collider** project

LHC Project Document No.
LHC-QITES-QA-0041

CERN Div./Group or Supplier/Contractor Document No.
AT-ACR-IN/NV

EDMS Document No.
412013

Certificate of Conformity

for CERN supplied components

1. ***Part description***	2. ***CERN Part ID*** *(19 chars)*		5. ***Other identification***
	3. ***Part No.*** *(10 chars)*	4. ***Serial No.*** *(8 chars)*	
Cryogenic Thermometer	HCQITESCXT-CR024560		CX_LS_X19146
Cryogenic Thermometer	HCQITESCXT-CR024570		CX_LS_X19147
Cryogenic Thermometer	HCQITESCXT-CR024580		CX_LS_X19148

6. ***Recipient contractor:***	FNAL
7. ***Contract / Order No:***	USA-CERN Collaboration Agreement - P005
8. ***Responsible person at CERN:***	Nicolas VAUTHIER — ***Tel.*** 00 41 22 767 42 66 — ***E-mail.*** Nicolas.vauthier@cern.ch
9. ***Reference specification:***	LHC-QIT-AP-0002: Installation Guide for LHC Cryogenic Thermometer
10. ***Reference drawings:***	
11. ***Part manufactured by:***	Lake Shore® / Anco SA / CERN
12. ***Acceptance test refs:***	See Attached Cryogenic Thermometer Travellers
13. ***Acceptance test results:***	Conform to Technical Specification
14. ***Comments:***	Cryogenic Thermometer is provided in a protecting box, traveller. Paper and electronic versions of traveller must be filled and returned to CERN.

CERN certifies that the supplied material is conform to the reference specification.

Date:	***Name:***	***Signature:***
05-Nov-2003	N. Vauthier	

CERN
CH-1211 Geneva 23
Switzerland

the **Large Hadron Collider** project

LHC Project Document No.
LHC-QITES-QA-0041

CERN Div./Group or Supplier/Contractor Document No.
AT-ACR-IN/NV

EDMS Document No.
412013

Certificate of Conformity

for CERN supplied components

1. ***Part description***	2. ***CERN Part ID*** *(19 chars)*		5. ***Other identification***
[redacted]	3. ***Part No.*** *(10 chars)*	4. ***Serial No.*** *(8 chars)*	
Cryogenic Thermometer	HCQITESCXT-CR024560		CX_LS_X19146
Cryogenic Thermometer	HCQITESCXT-CR024570		CX_LS_X19147
Cryogenic Thermometer	HCQITESCXT-CR024580		CX_LS_X19148

6. ***Recipient contractor:***	FNAL
7. ***Contract / Order No:***	USA-CERN Collaboration Agreement - P005
8. ***Responsible person at CERN:***	Nicolas VAUTHIER — ***Tel.*** 00 41 22 767 42 66 — ***E-mail.*** Nicolas.vauthier@cern.ch
9. ***Reference specification:***	LHC-QIT-AP-0002: Installation Guide for LHC Cryogenic Thermometer
10. ***Reference drawings:***	
11. ***Part manufactured by:***	Lake Shore® / Anco SA / CERN
12. ***Acceptance test refs:***	See Attached Cryogenic Thermometer Travellers
13. ***Acceptance test results:***	Conform to Technical Specification
14. ***Comments:***	Cryogenic Thermometer is provided in a protecting box, traveller. Paper and electronic versions of traveller must be filled and returned to CERN.

CERN certifies that the supplied material is conform to the reference specification.

Date:	***Name:***	***Signature:***
05-Nov-2003	N. Vauthier	Vauthier

CERN
CH-1211 Geneva 23
Switzerland

the **Large Hadron Collider** project

LHC Project Document No.
LHC-QITES-QA-0041

CERN Div./Group or Supplier/Contractor Document No.
AT-ACR-IN/NV

EDMS Document No.
412013

Certificate of Conformity

for CERN supplied components

1. ***Part description***	2. ***CERN Part ID*** *(19 chars)*			5. ***Other identification***
	3. ***Part No.*** *(10 chars)*	-	4. ***Serial No.*** *(8 chars)*	
Cryogenic Thermometer	HCQITESCXT-CR024560			CX_LS_X19146
Cryogenic Thermometer	HCQITESCXT-CR024570			CX_LS_X19147
Cryogenic Thermometer	HCQITESCXT-CR024580			CX_LS_X19148

6. ***Recipient contractor:***	FNAL		
7. ***Contract / Order No:***	USA-CERN Collaboration Agreement - P005		
8. ***Responsible person at CERN:***	Nicolas VAUTHIER	***Tel.***	00 41 22 767 42 66
		E-mail.	Nicolas.vauthier@cern.ch
9. ***Reference specification:***	LHC-QIT-AP-0002: Installation Guide for LHC Cryogenic Thermometer		
10. ***Reference drawings:***			
11. ***Part manufactured by:***	Lake Shore® / Anco SA / CERN		
12. ***Acceptance test refs:***	See Attached Cryogenic Thermometer Travellers		
13. ***Acceptance test results:***	Conform to Technical Specification		
14. ***Comments:***	Cryogenic Thermometer is provided in a protecting box, traveller. Paper and electronic versions of traveller must be filled and returned to CERN.		

CERN certifies that the supplied material is conform to the reference specification.

Date:	***Name:***	***Signature:***
05-Nov-2003	N. Vauthier	

CERN
CH-1211 Geneva 23
Switzerland

LHC ICP Document No.
LHC-MCBX-FR-0001 rev. **1.0**

EDMS Document No.
---

the **Large Hadron Collider** project

Certificate of Conformity

Part name:	MCBX Inner Triplet Dipole Corrector		
LHC Identification No.:	HCMCBX_001-SI000012	Serial No.:	HCMCBX_001-SI000012
Shipped To:	CERN	***Shipment No:***	***12***
		Shipment	***30/09/03***
Manufacturer:	SIGMAPHI	Contract No.:	F375/LHC/LHC
Related tech. Specification:	LHC-MCBX-CI-0001 and addenda		
Related drawings:	LHCMCBX_0012 (1525-CN-1001)		
Responsible person at CERN:	Mikko Karppinen	***Tel.***	+41 22 767 4305
		E-mail.	Mikko.Karppinen@cern.ch
Responsible person at SIGMAPHI:	Damien Neuvéglise	***Tel.***	+33 2 97 01 08 80
		E-mail.	dneuveglise@sigmaphi.fr

SIGMAPHI certifies that the delivered material conforms to the technical specification mentioned above:

Date: 30/09/03	***Name: D.Neuvéglise***	***Signature: D.Neuvéglise***

Acceptance test results

		MCBXV (Inner)	***MCBXH (Outer)***	***Remarks:***
RT dc resistance (Ω):	***SIGMAPHI:***	***17.6***	***21.6***	
	CERN:	***17.5***	***21.4***	
HP3457A →	***CMA[1]:***	17.5478 Ω	21.3855 Ω	FERMI (S. GOULD)
Inductance @1 kHz/100 Hz (mH)	***SIGMAPHI:***	***66 / 112.68***	***68.04 / 161.04***	
	CERN	***62.98 / 84.38***	***58.38 / 97.84***	
	CMA:	62.91 / 2.149	58.32 / 1.536	Q 4.4 ; 14.5 / Q 2.4 ; 9.8
R.T. leakage current to ground @ 1.5 kV (μA):	***SIGMAPHI:***	***0.5***	***0.5***	
	CERN:	***0.004***	***0.007***	
	CMA:	.002 μA	.002 μA	D. Gould 1/29/04

	Cold Mass Assembler
Visual inspection	
Name / Signature	
Date	10 / 11 / 2003

Accepted: ☒

Rejected: ☐

Comments (SigmaPhi):	
	Stainless steel shim 0.05mm thick around lamination assembly

Comments (CERN):	***The magnetic axis of this assembly has not been measured at warm.***
	The scribe line is made using the dowel pin holes on the connection plate as the reference.
	During the combined powering field was rotated 0-360 deg at the nominal current @ 1.9 K.

Comments (CMA):	

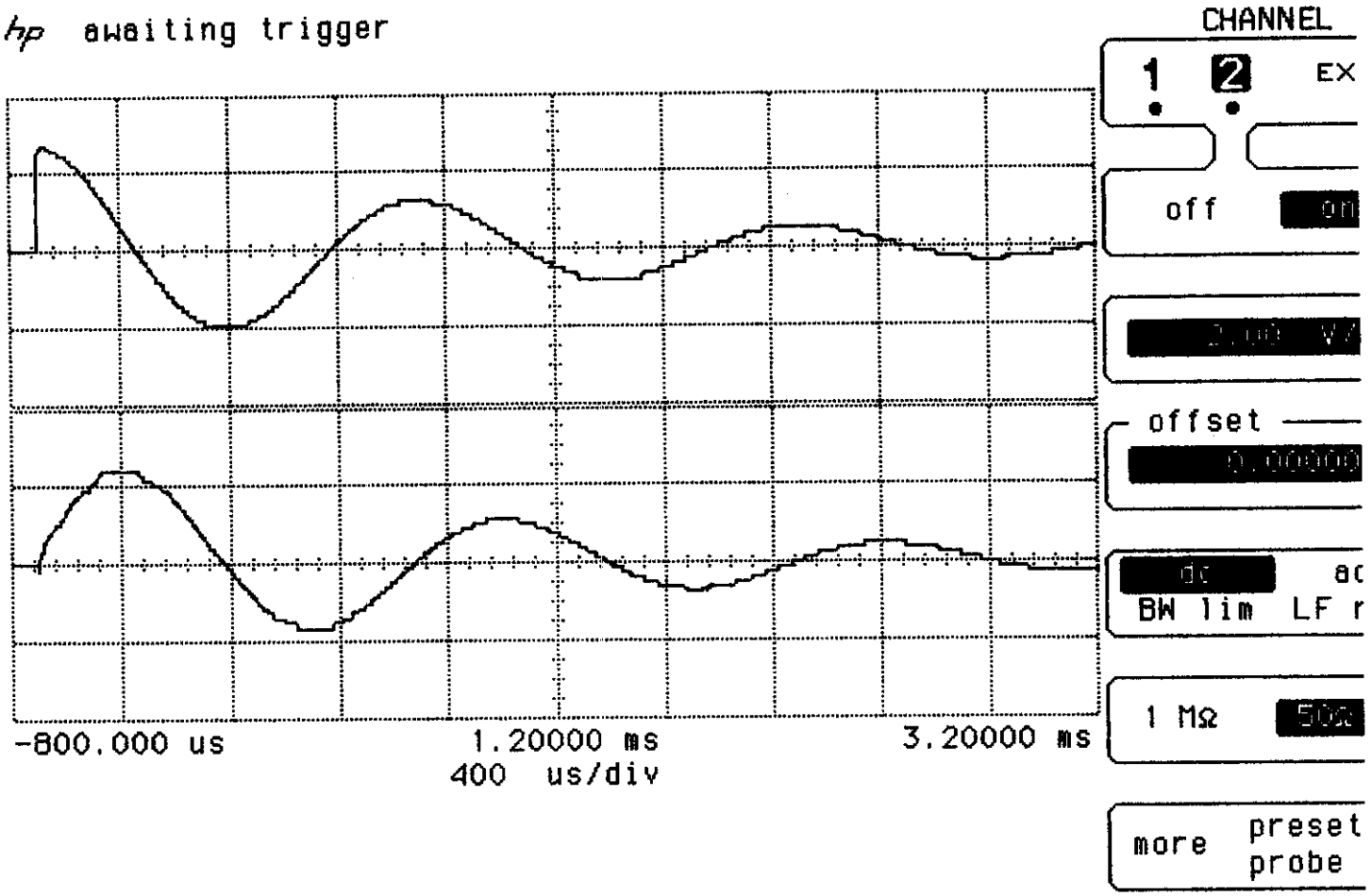

	Sensitivity	Offset	Probe	Coupling
Channel 1	350 mV/div	0.00000 V	1.000 :1	dc (1M ohm)
Channel 2	2.00 V/div	0.00000 V	1.000 :1	dc (50 ohm)

Trigger mode : Edge
On Negative Edge Of Chan2
Trigger Level
Chan2 = 125.000 mV (noise reject ON)
Holdoff = 40.000 ns

LMQXB05

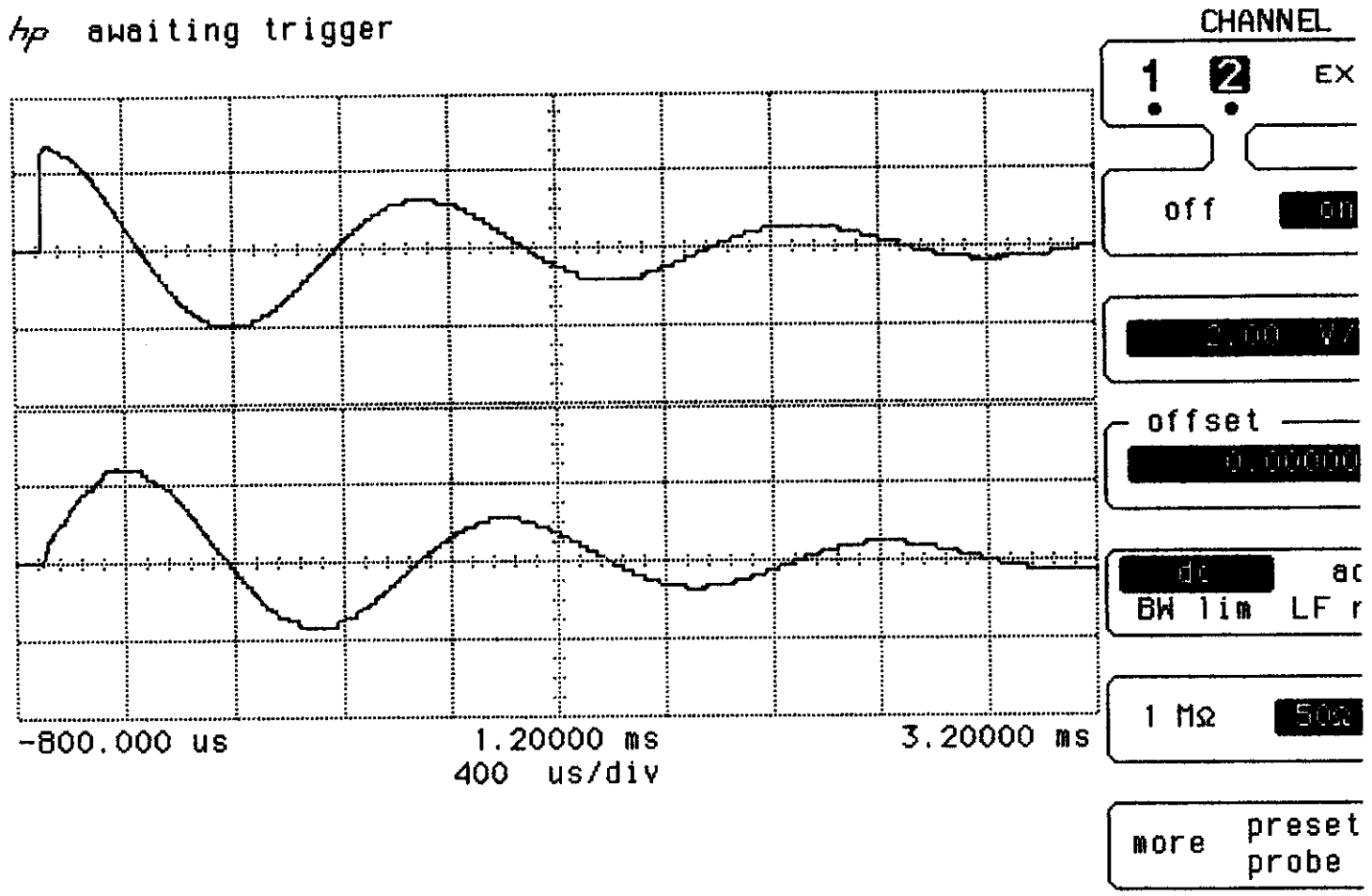

	Sensitivity	Offset	Probe	Coupling
Channel 1	350 mV/div	0.00000 V	1.000 :1	dc (1M ohm)
Channel 2	2.00 V/div	0.00000 V	1.000 :1	dc (50 ohm)

Trigger mode : Edge
On Negative Edge Of Chan2
Trigger Level
Chan2 = 125.000 mV (noise reject ON)
Holdoff = 40.000 ns

1st 500V Q1 14:30 3/00/04 MQXB05

2 LMQXB05

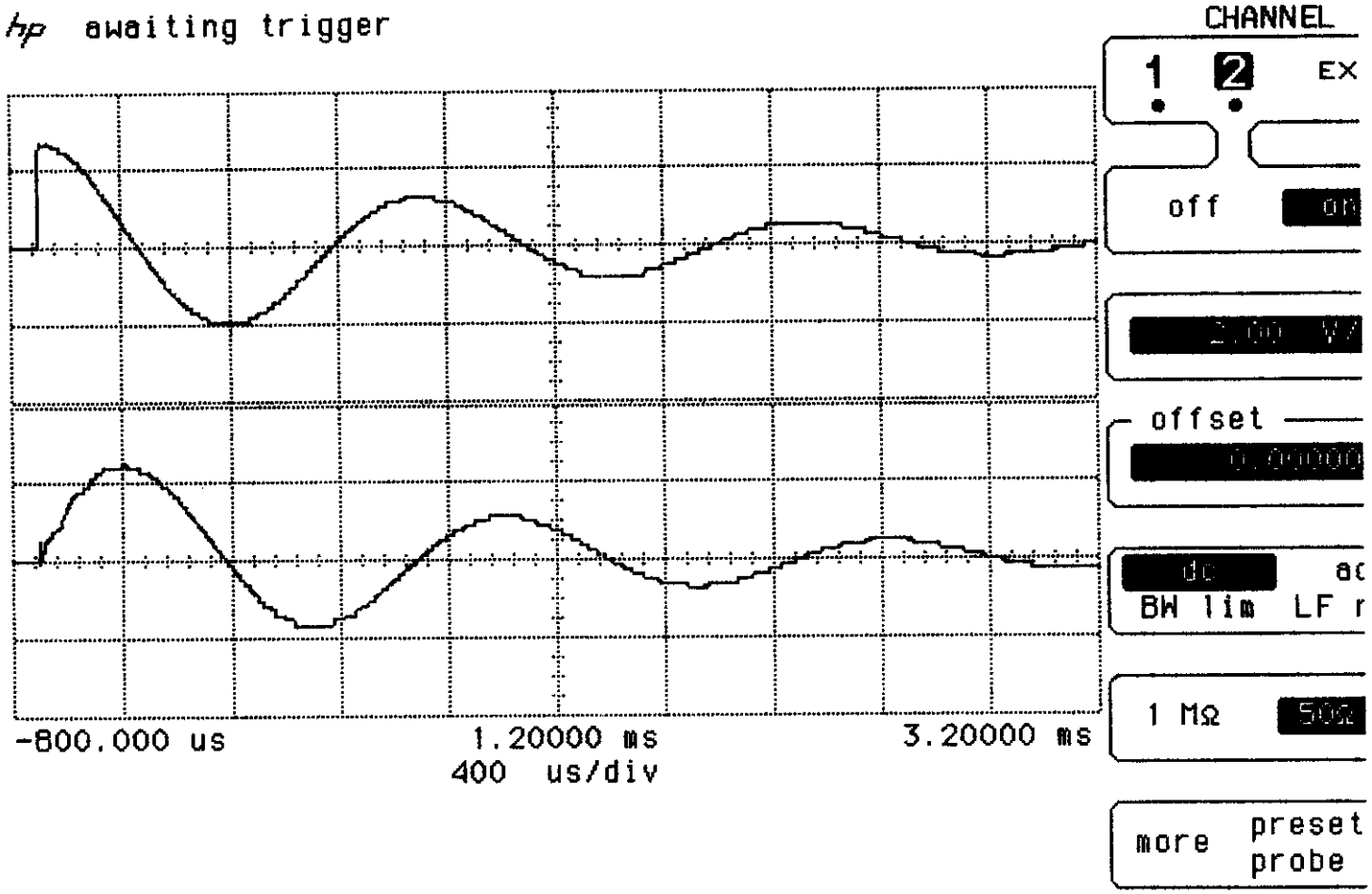

	Sensitivity	Offset	Probe	Coupling
Channel 1	350 mV/div	0.00000 V	1.000 :1	dc (1M ohm)
Channel 2	2.00 V/div	0.00000 V	1.000 :1	dc (50 ohm)

Trigger mode : Edge
On Negative Edge Of Chan2
Trigger Level
Chan2 = 125.000 mV (noise reject ON)
Holdoff = 40.000 ns

2nd ,00 02 14:25 3/09/04 MQXB08

3 LMQXB05

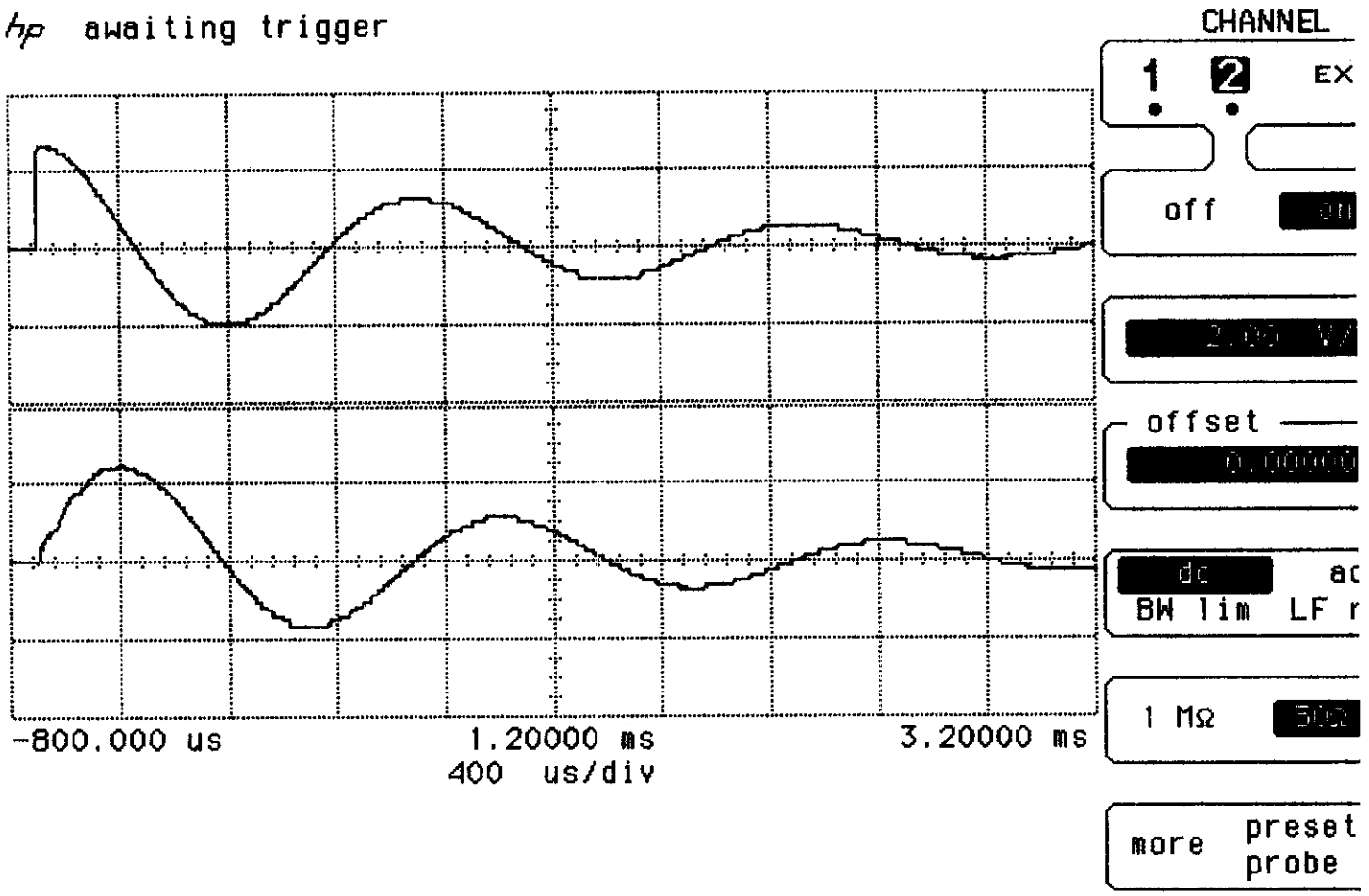

	Sensitivity	Offset	Probe	Coupling
Channel 1	350 mV/div	0.00000 V	1.000 :1	dc (1M ohm)
Channel 2	2.00 V/div	0.00000 V	1.000 :1	dc (50 ohm)

Trigger mode : Edge
On Negative Edge Of Chan2
Trigger Level
Chan2 = 125.000 mV (noise reject ON)
Holdoff = 40.000 ns

1st 500 V Q2 14:23 3/08/04 MQX808

4 LMQXB05

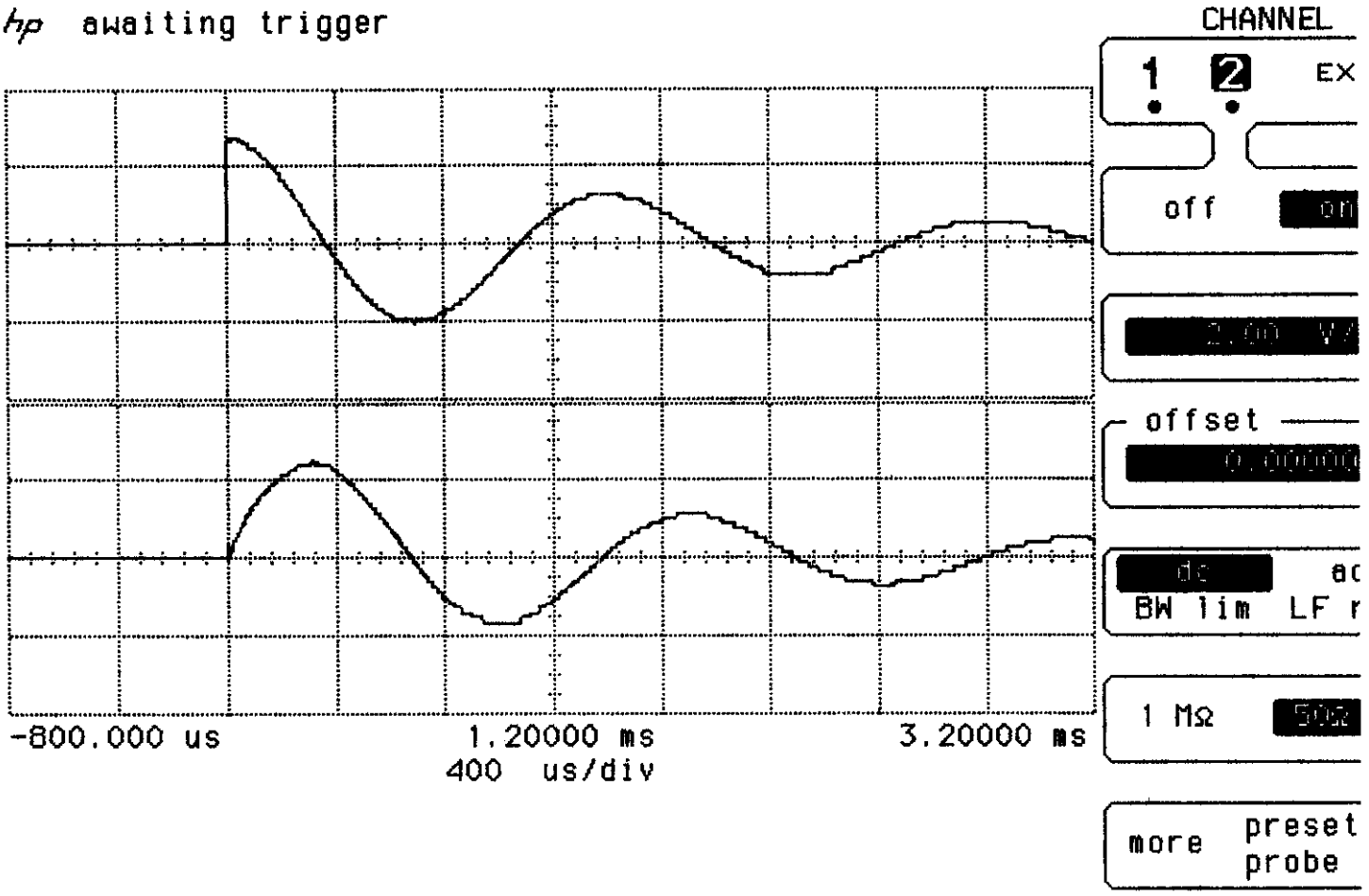

	Sensitivity	Offset	Probe	Coupling
Channel 1	350 mV/div	0.00000 V	1.000 :1	dc (1M ohm)
Channel 2	2.00 V/div	0.00000 V	1.000 :1	dc (50 ohm)

Trigger mode : Edge
On Negative Edge Of Chan2
Trigger Level
Chan2 = 125.000 mV (noise reject ON)
Holdoff = 40.000 ns

1st 50V Q3 14:16 3/03/04 MQX B08

5 LMQXB05

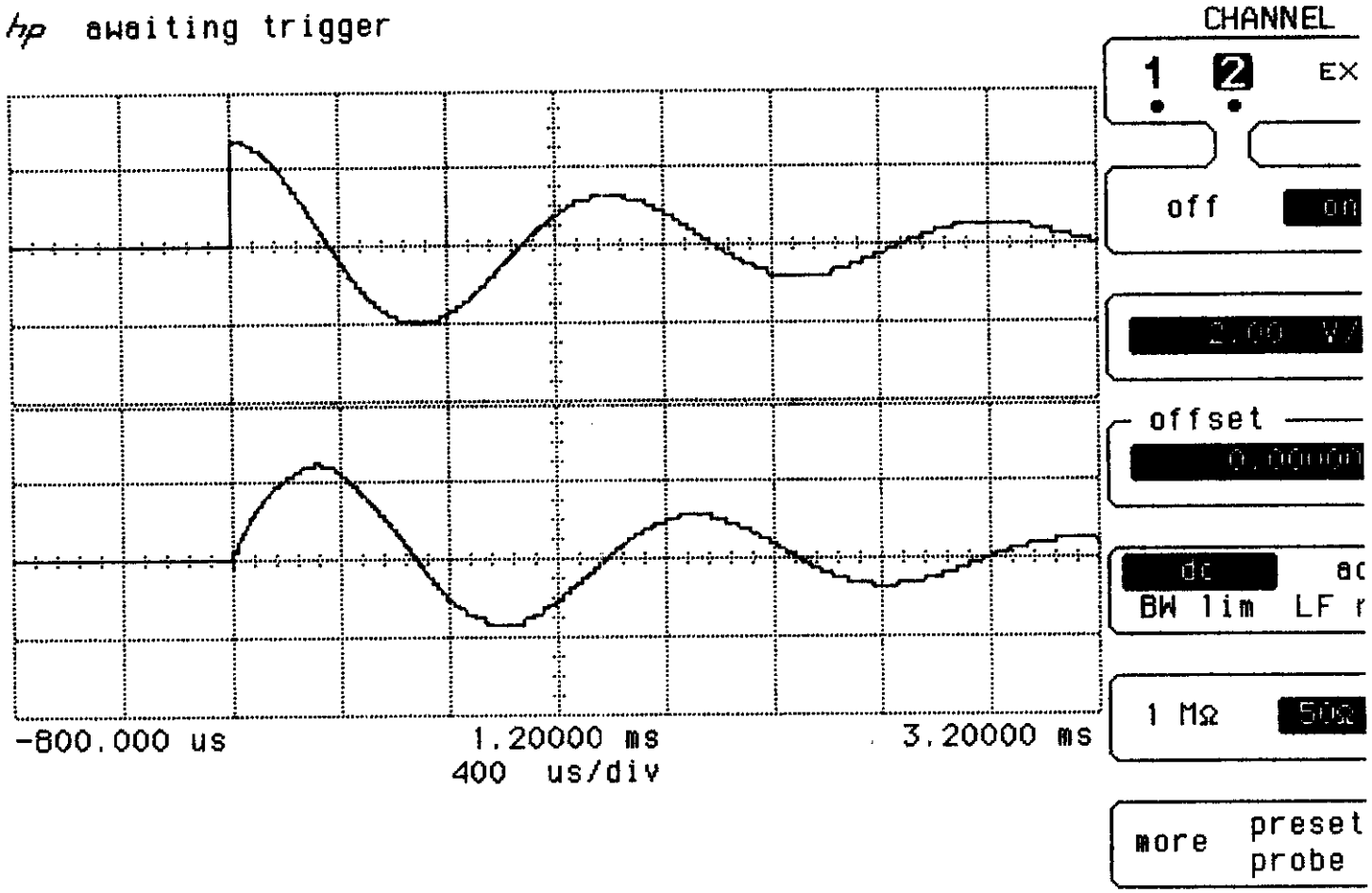

	Sensitivity	Offset	Probe	Coupling
Channel 1	350 mV/div	0.00000 V	1.000 :1	dc (1M ohm)
Channel 2	2.00 V/div	0.00000 V	1.000 :1	dc (50 ohm)

Trigger mode : Edge
On Negative Edge Of Chan2
Trigger Level
Chan2 = 125.000 mV (noise reject ON)
Holdoff = 40.000 ns

2nd 500V Q5 14:20 3/09/04 MQXBOR

6 LMQXB05

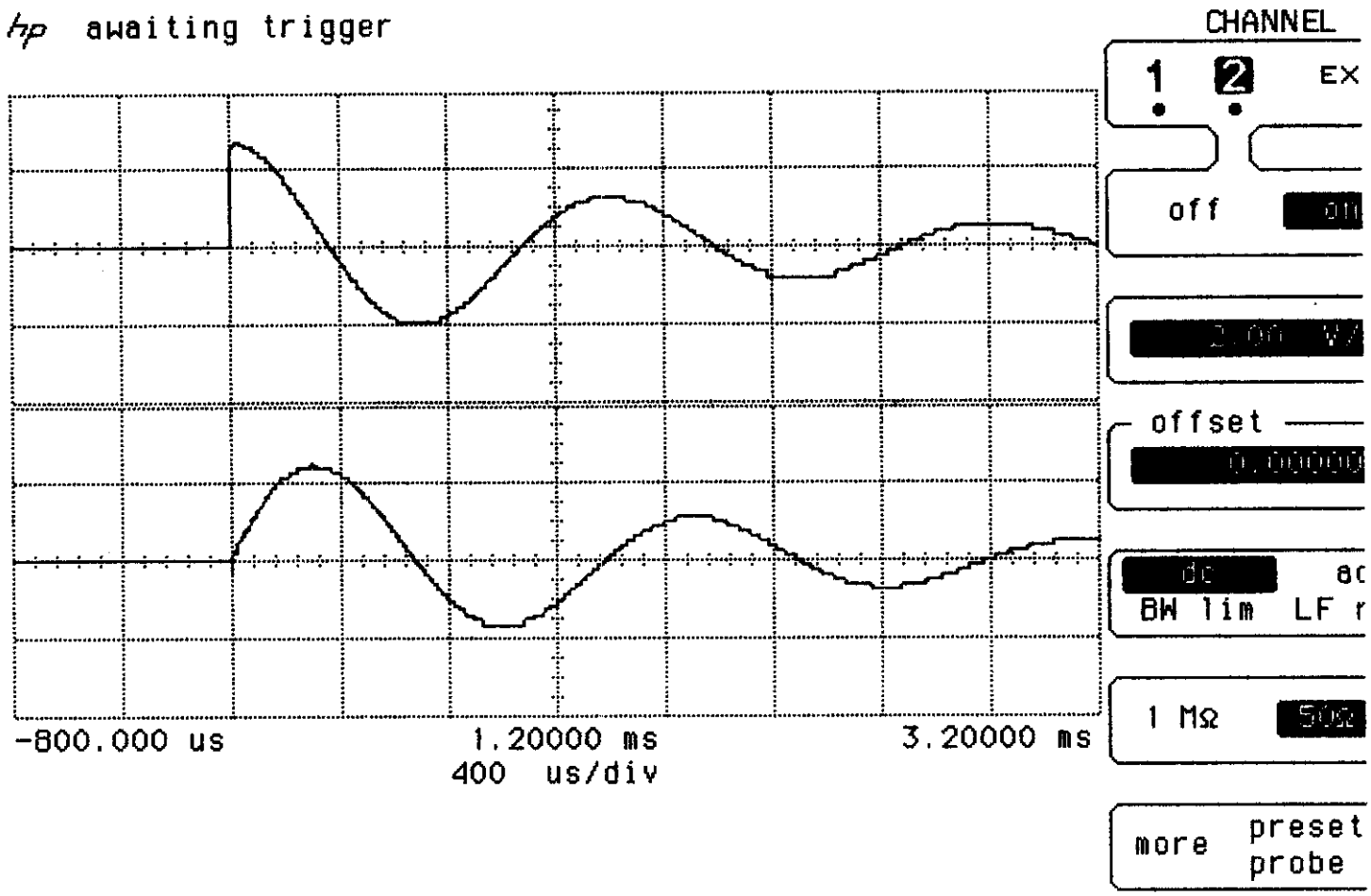

	Sensitivity	Offset	Probe	Coupling
Channel 1	350 mV/div	0.00000 V	1.000 :1	dc (1M ohm)
Channel 2	2.00 V/div	0.00000 V	1.000 :1	dc (50 ohm)

Trigger mode : Edge
On Negative Edge Of Chan2
Trigger Level
Chan2 = 125.000 mV (noise reject ON)
Holdoff = 40.000 ns

1st 500V Q4 14:14 3/03/04 MQXBOX

7 LMQXB05

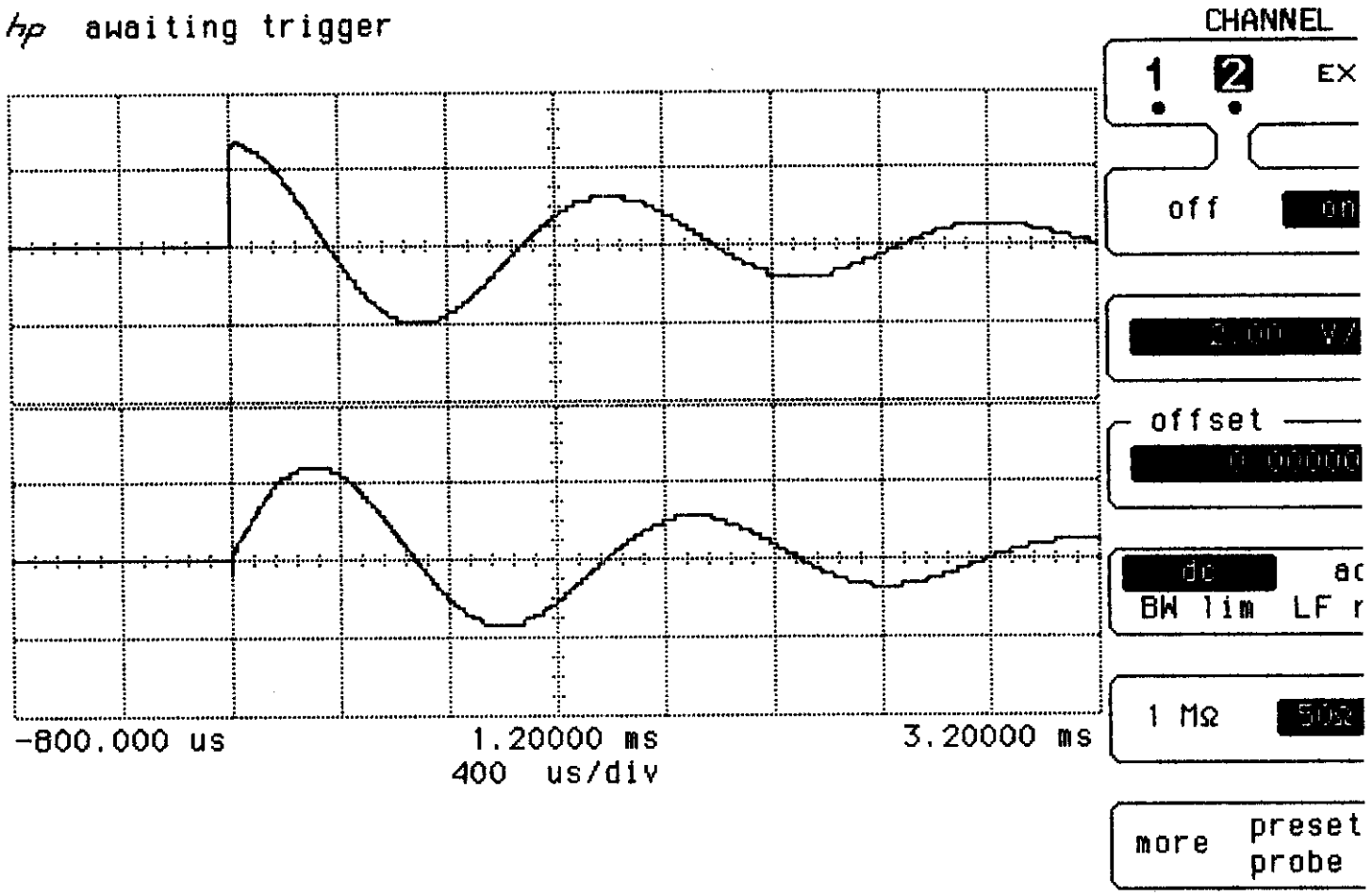

	Sensitivity	Offset	Probe	Coupling
Channel 1	350 mV/div	0.00000 V	1.000 :1	dc (1M ohm)
Channel 2	2.00 V/div	0.00000 V	1.000 :1	dc (50 ohm)

Trigger mode : Edge
On Negative Edge Of Chan2
Trigger Level
Chan2 = 125.000 mV (noise reject ON)
Holdoff = 40.000 ns

2nd 500V Q4 14:15 3/09/04 MUX BOX

8 LMQXB05

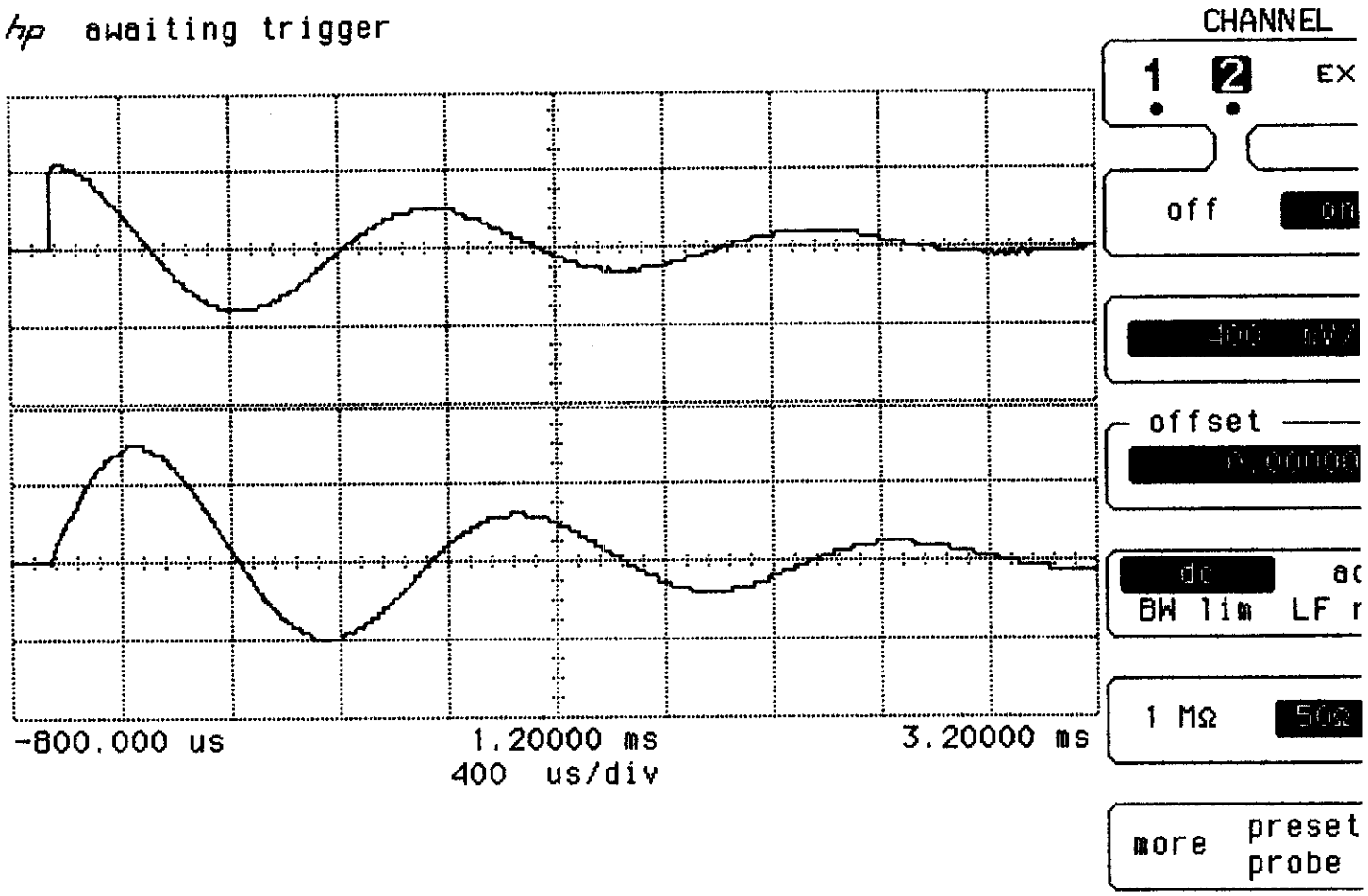

	Sensitivity	Offset	Probe	Coupling
Channel 1	100 mV/div	0.00000 V	1.000 :1	dc (1M ohm)
Channel 2	400 mV/div	0.00000 V	1.000 :1	dc (50 ohm)

Trigger mode : Edge
On Negative Edge Of Chan2
Trigger Level
Chan2 = 125.000 mV (noise reject ON)
Holdoff = 40.000 ns

1st POV Q4 14:09 3/09/04 MQXB08

9 LMQXB05

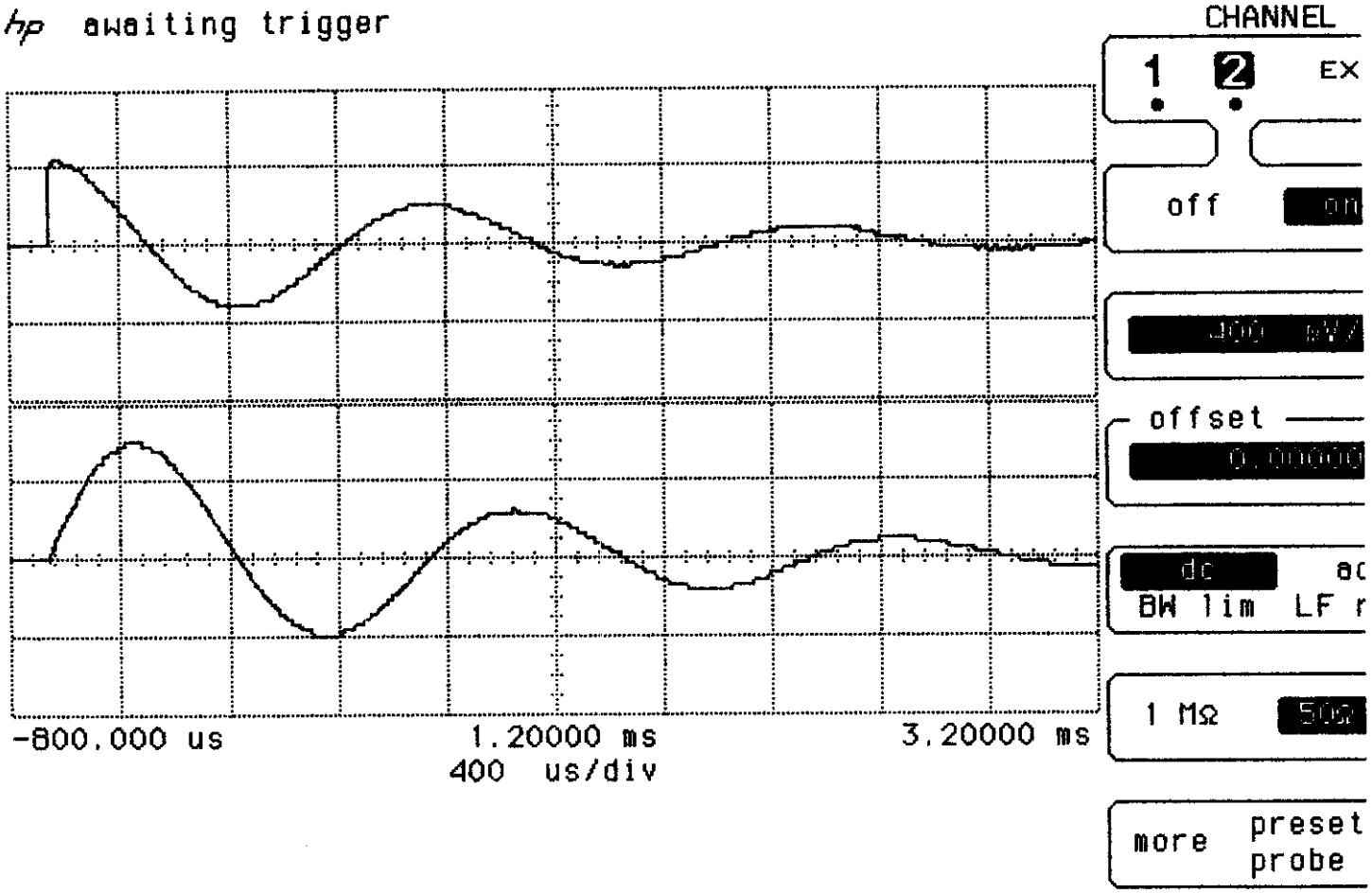

	Sensitivity	Offset	Probe	Coupling
Channel 1	100 mV/div	0.00000 V	1.000 :1	dc (1M ohm)
Channel 2	400 mV/div	0.00000 V	1.000 :1	dc (50 ohm)

Trigger mode : Edge
On Negative Edge Of Chan2
Trigger Level
Chan2 = 125.000 mV (noise reject ON)
Holdoff = 40.000 ns

2nd 100V Q4 14:11 3/03/04 MQXB08

10 LMQXB05

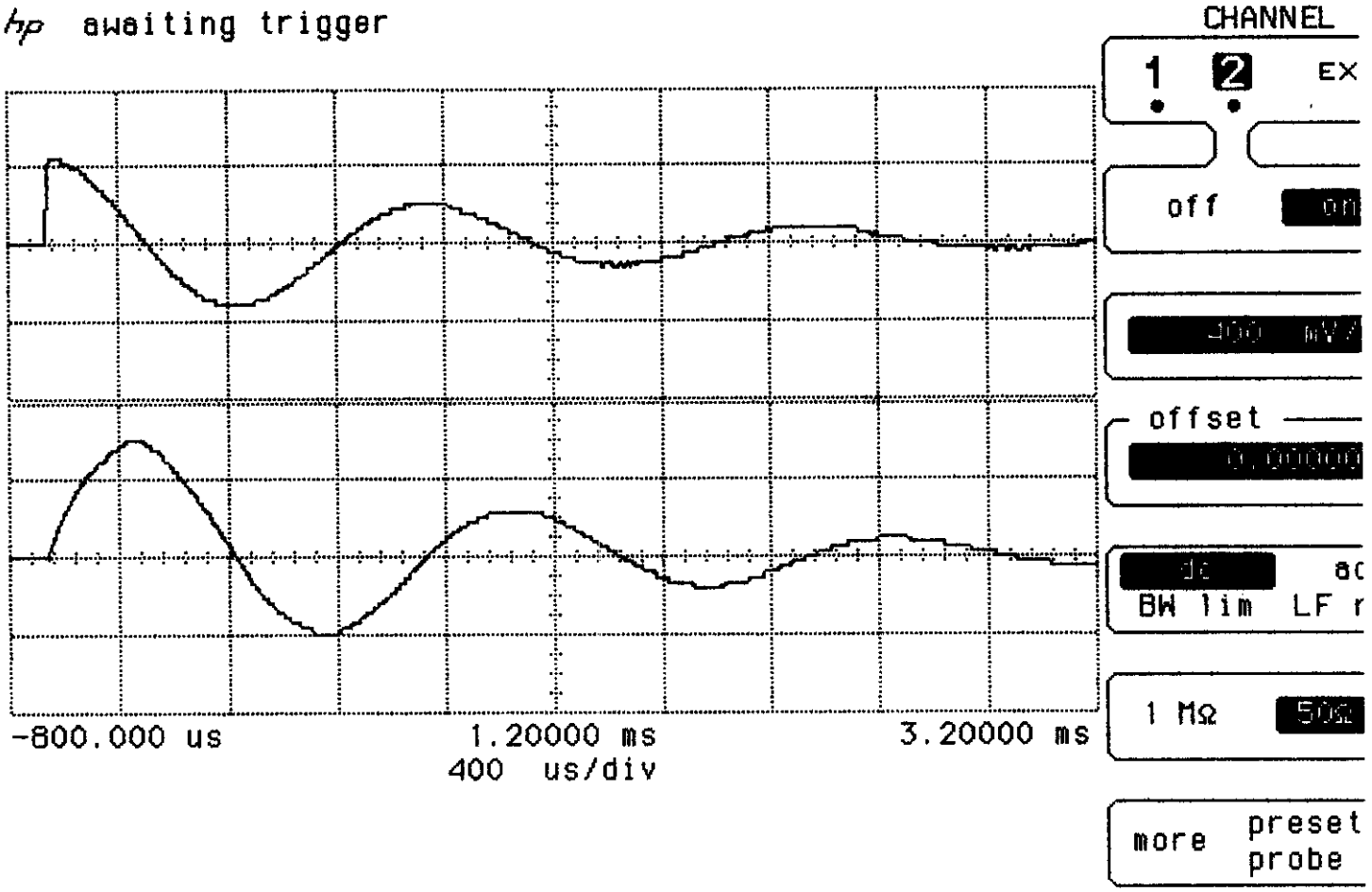

	Sensitivity	Offset	Probe	Coupling
Channel 1	100 mV/div	0.00000 V	1.000 :1	dc (1M ohm)
Channel 2	400 mV/div	0.00000 V	1.000 :1	dc (50 ohm)

Trigger mode : Edge
On Negative Edge Of Chan2
Trigger Level
Chan2 = 125.000 mV (noise reject ON)
Holdoff = 40.000 ns

1st Q3 100V 14:04 3/09/04 MQXP02

11 LMQXB05

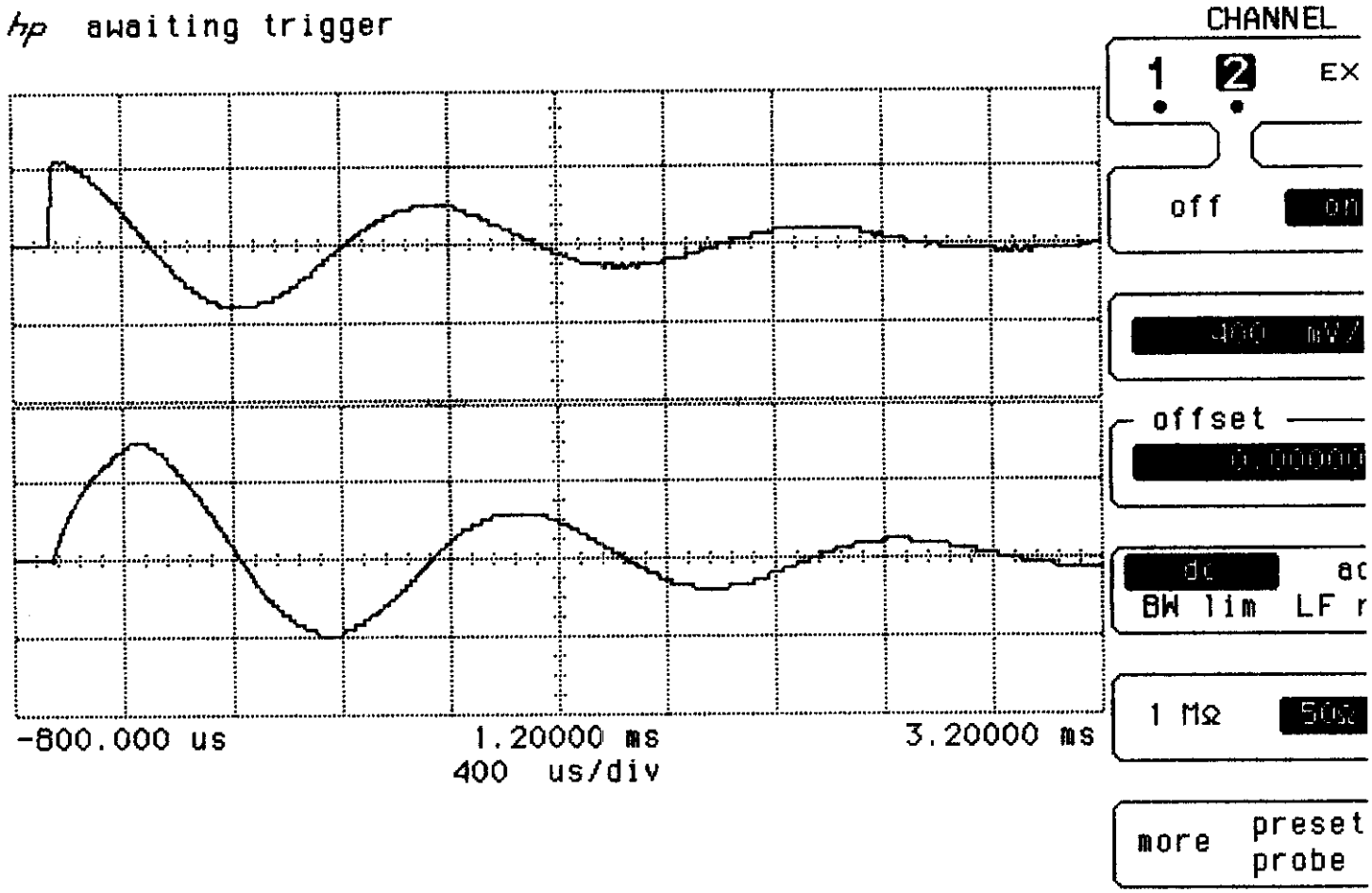

	Sensitivity	Offset	Probe	Coupling
Channel 1	100 mV/div	0.00000 V	1.000 :1	dc (1M ohm)
Channel 2	400 mV/div	0.00000 V	1.000 :1	dc (50 ohm)

Trigger mode : Edge
On Negative Edge Of Chan2
Trigger Level
Chan2 = 125.000 mV (noise reject ON)
Holdoff = 40.000 ns

2nd Q3 100V 14:06 3/09/04 MQX B08

12 LMQXB05

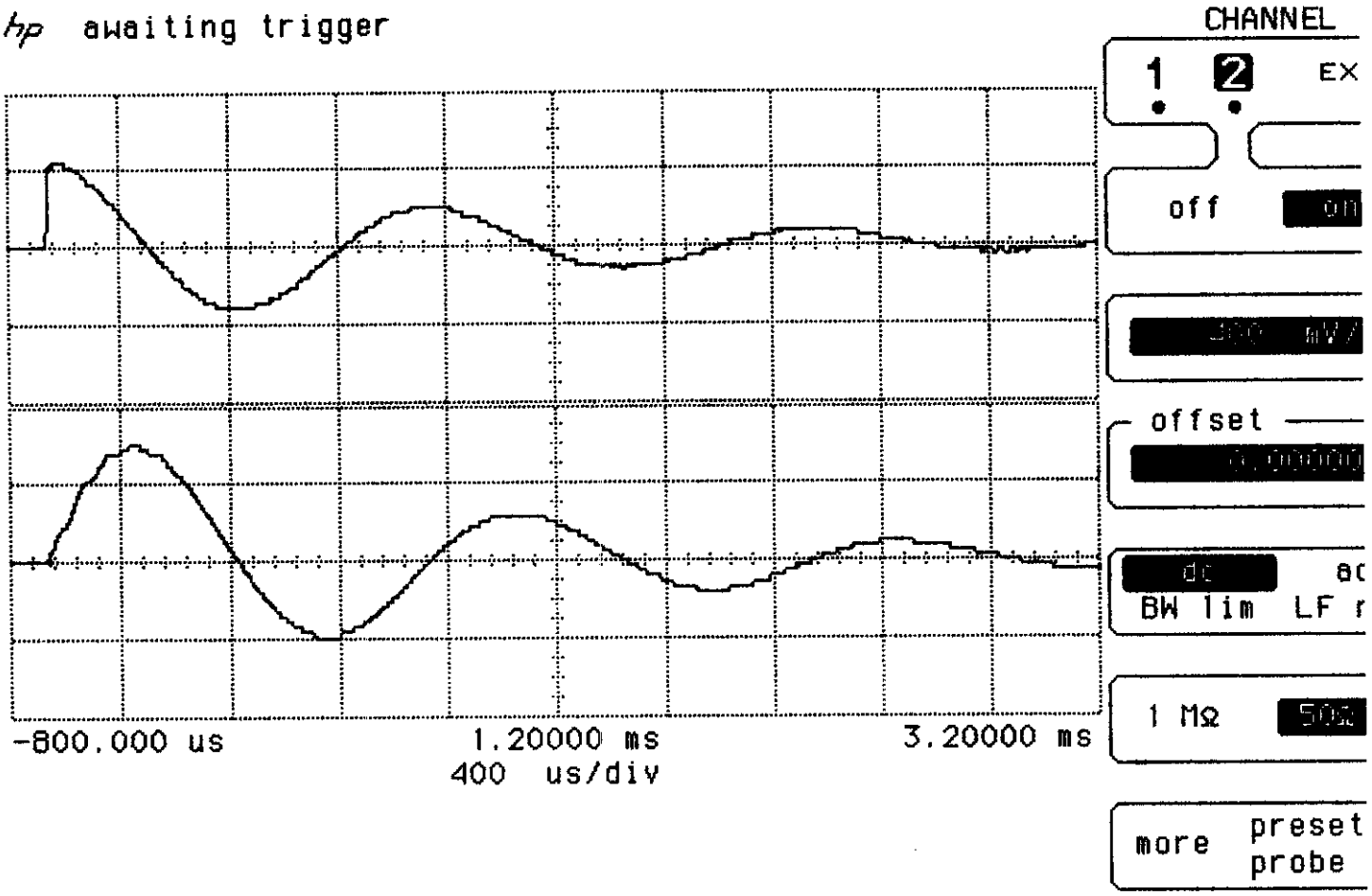

	Sensitivity	Offset	Probe	Coupling
Channel 1	100 mV/div	0.00000 V	1.000 :1	dc (1M ohm)
Channel 2	400 mV/div	0.00000 V	1.000 :1	dc (50 ohm)

Trigger mode : Edge
On Negative Edge Of Chan2
Trigger Level
Chan2 = 125.000 mV (noise reject ON)
Holdoff = 40.000 ns

1st Q2 100V 15:53 3/09/04 MQXB08

13 LMQXB05

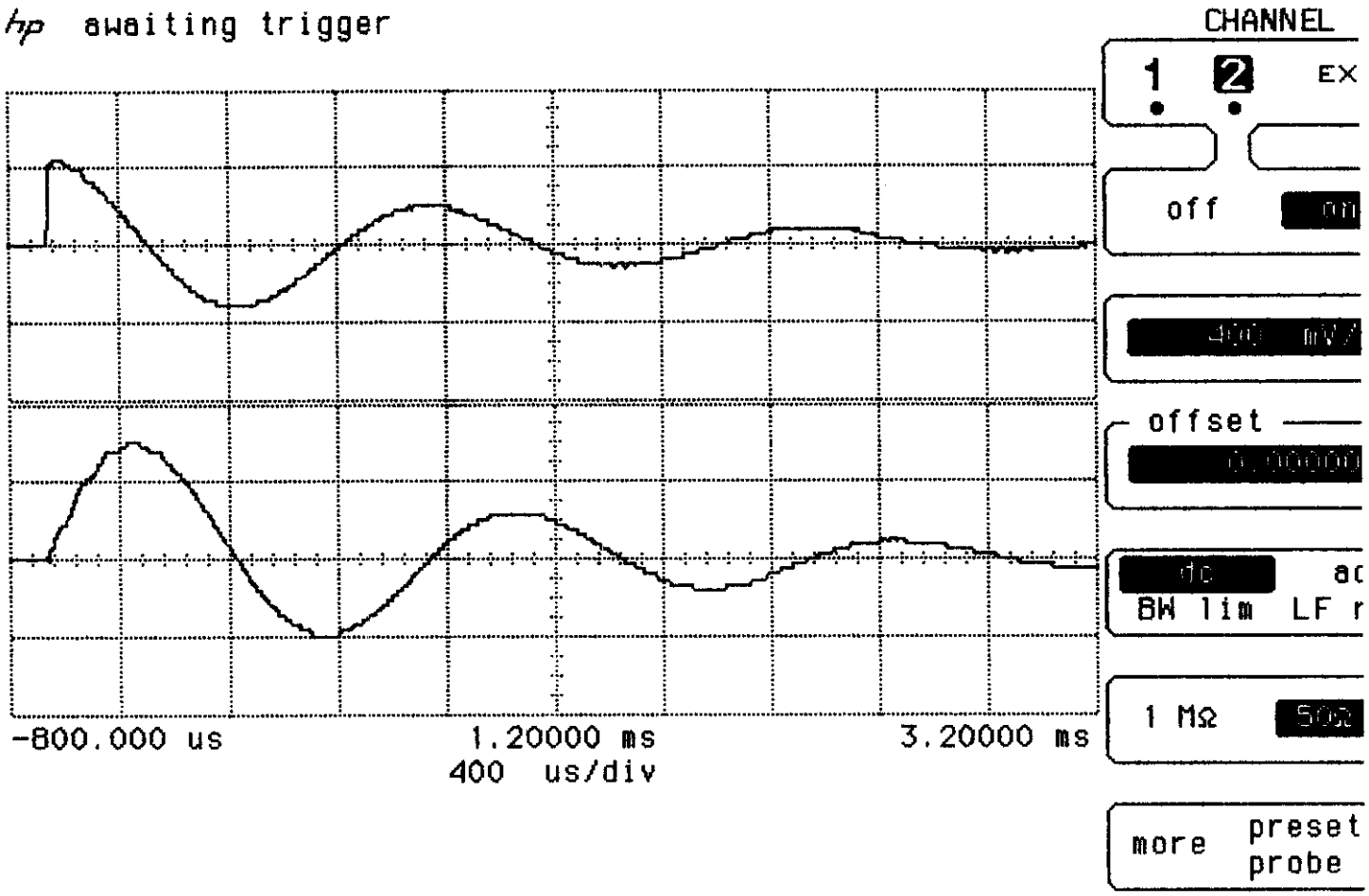

	Sensitivity	Offset	Probe	Coupling
Channel 1	100 mV/div	0.00000 V	1.000 :1	dc (1M ohm)
Channel 2	400 mV/div	0.00000 V	1.000 :1	dc (50 ohm)

Trigger mode : Edge
On Negative Edge Of Chan2
Trigger Level
Chan2 = 125.000 mV (noise reject ON)
Holdoff = 40.000 ns

2nd Q2 100V 14.02 3/09/04 MQXB08

LMQXB05

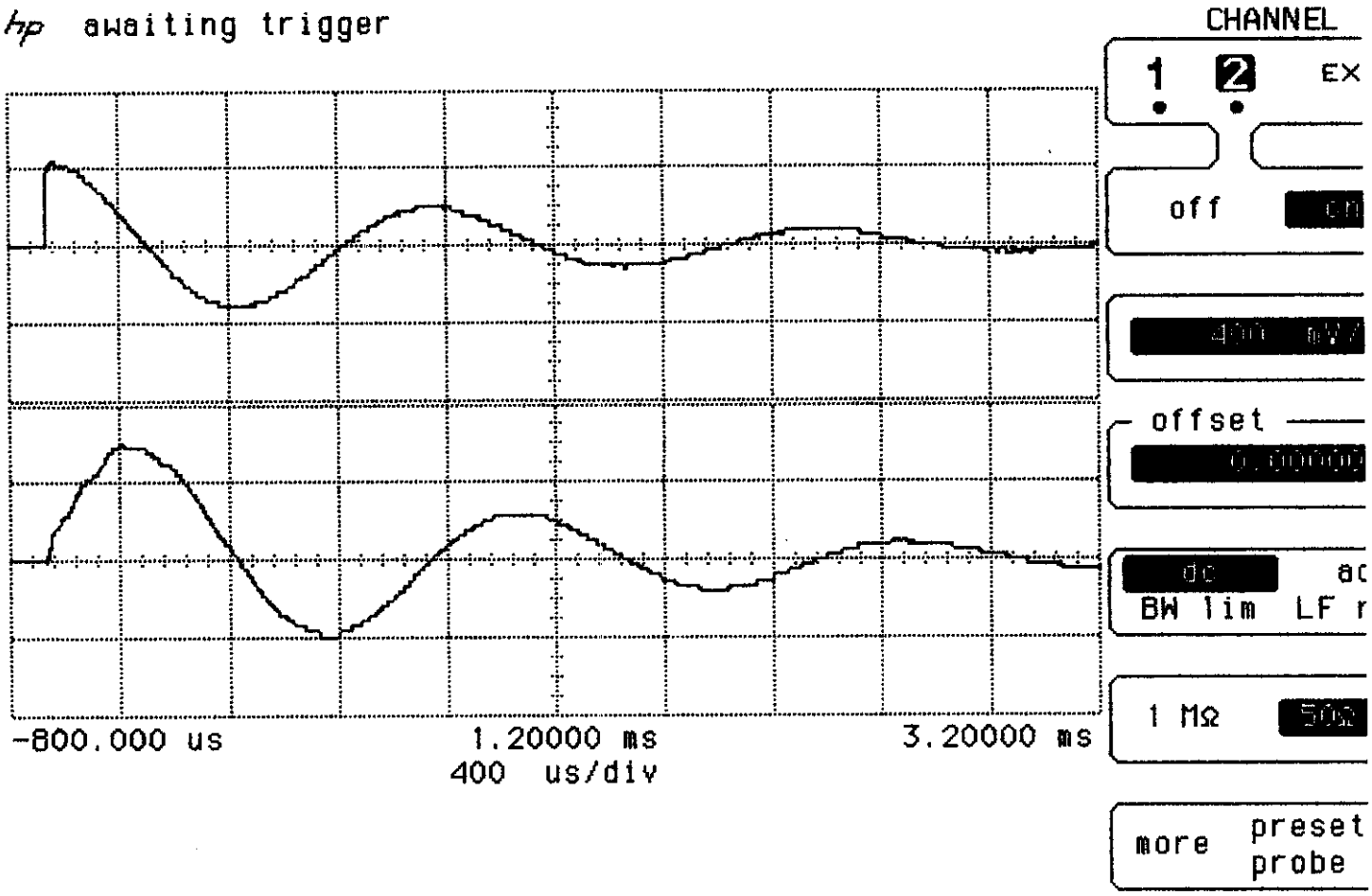

	Sensitivity	Offset	Probe	Coupling
Channel 1	100 mV/div	0.00000 V	1.000 :1	dc (1M ohm)
Channel 2	400 mV/div	0.00000 V	1.000 :1	dc (50 ohm)

Trigger mode : Edge
On Negative Edge Of Chan2
Trigger Level
Chan2 = 125.000 mV (noise reject ON)
Holdoff = 40.000 ns

1st Q1 100V 13:55 3/09/01 MQXB08

15 LMQXB05

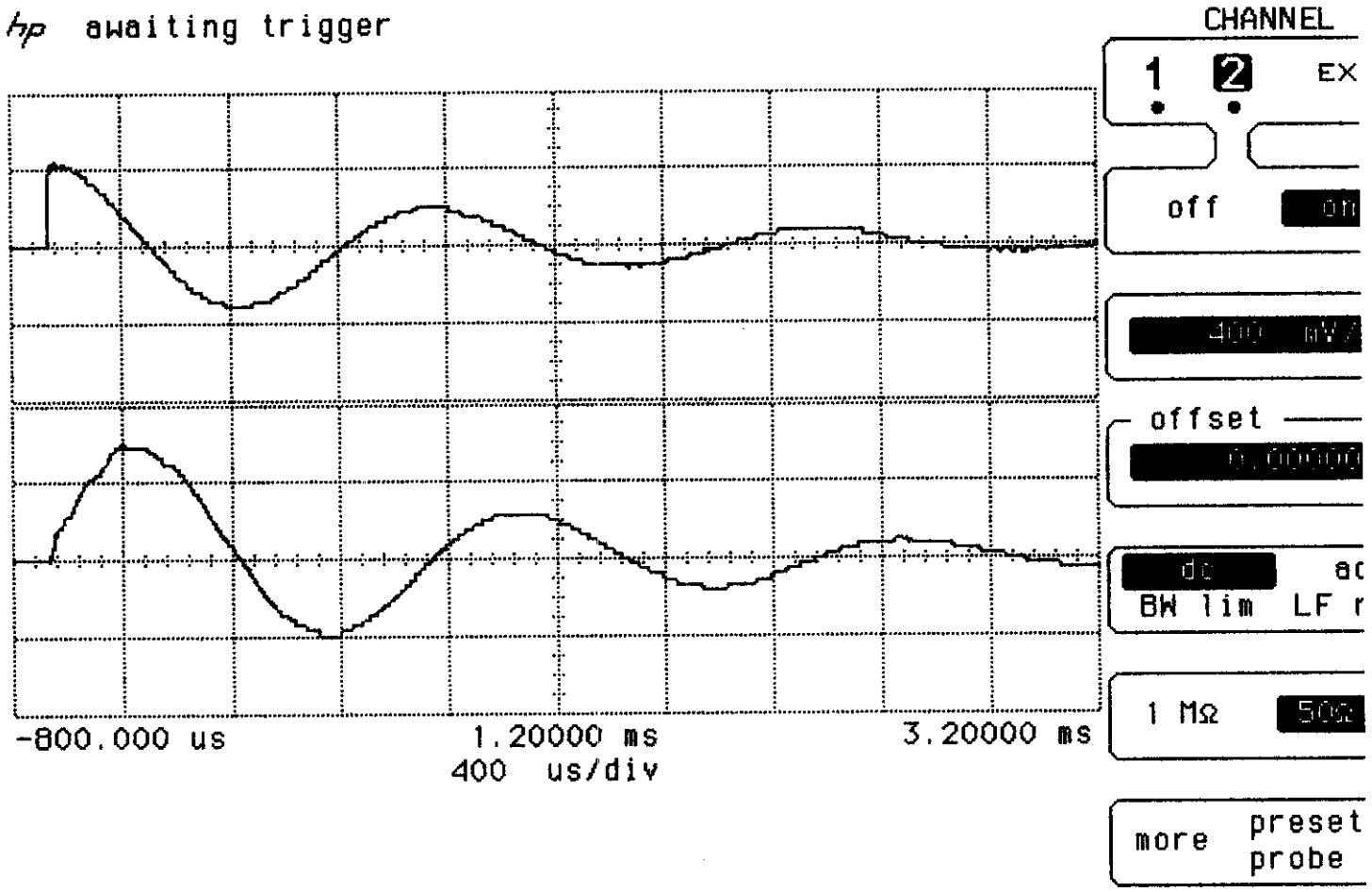

	Sensitivity	Offset	Probe	Coupling
Channel 1	100 mV/div	0.00000 V	1.000 :1	dc (1M ohm)
Channel 2	400 mV/div	0.00000 V	1.000 :1	dc (50 ohm)

Trigger mode : Edge
On Negative Edge Of Chan2
Trigger Level
Chan2 = 125.000 mV (noise reject ON)
Holdoff = 40.000 ns

2nd Q1 100V 13:58 3/09/04 MQXB08

LMQXB05

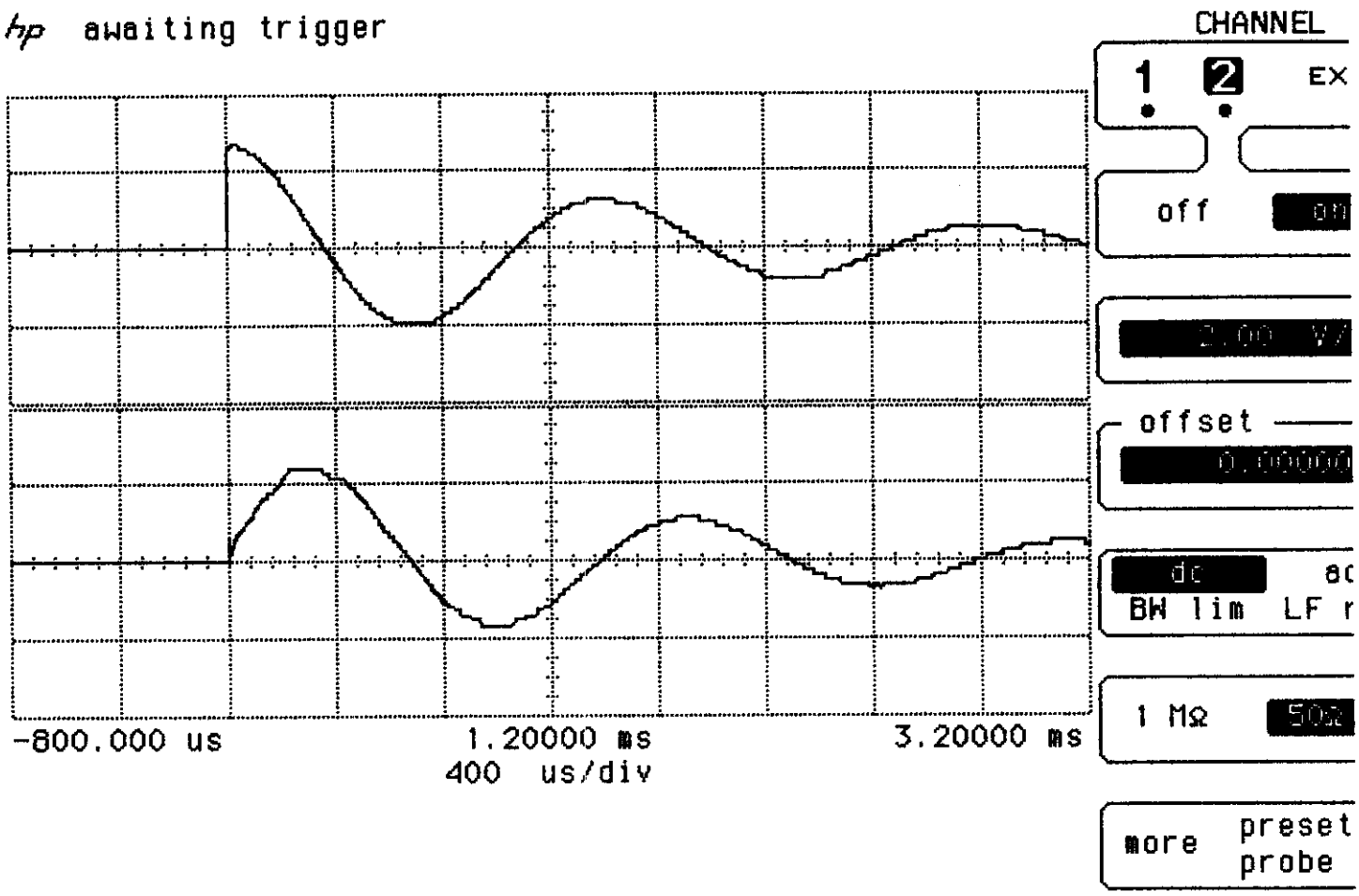

	Sensitivity	Offset	Probe	Coupling
Channel 1	350 mV/div	0.00000 V	1.000 :1	dc (1M ohm)
Channel 2	2.00 V/div	0.00000 V	1.000 :1	dc (50 ohm)

Trigger mode : Edge
On Negative Edge Of Chan2
Trigger Level
Chan2 = 125.000 mV (noise reject ON)
Holdoff = 40.000 ns

Q1 2nd 500V, 15:40 3/10/04 MQXB 11

17 LMQXB05

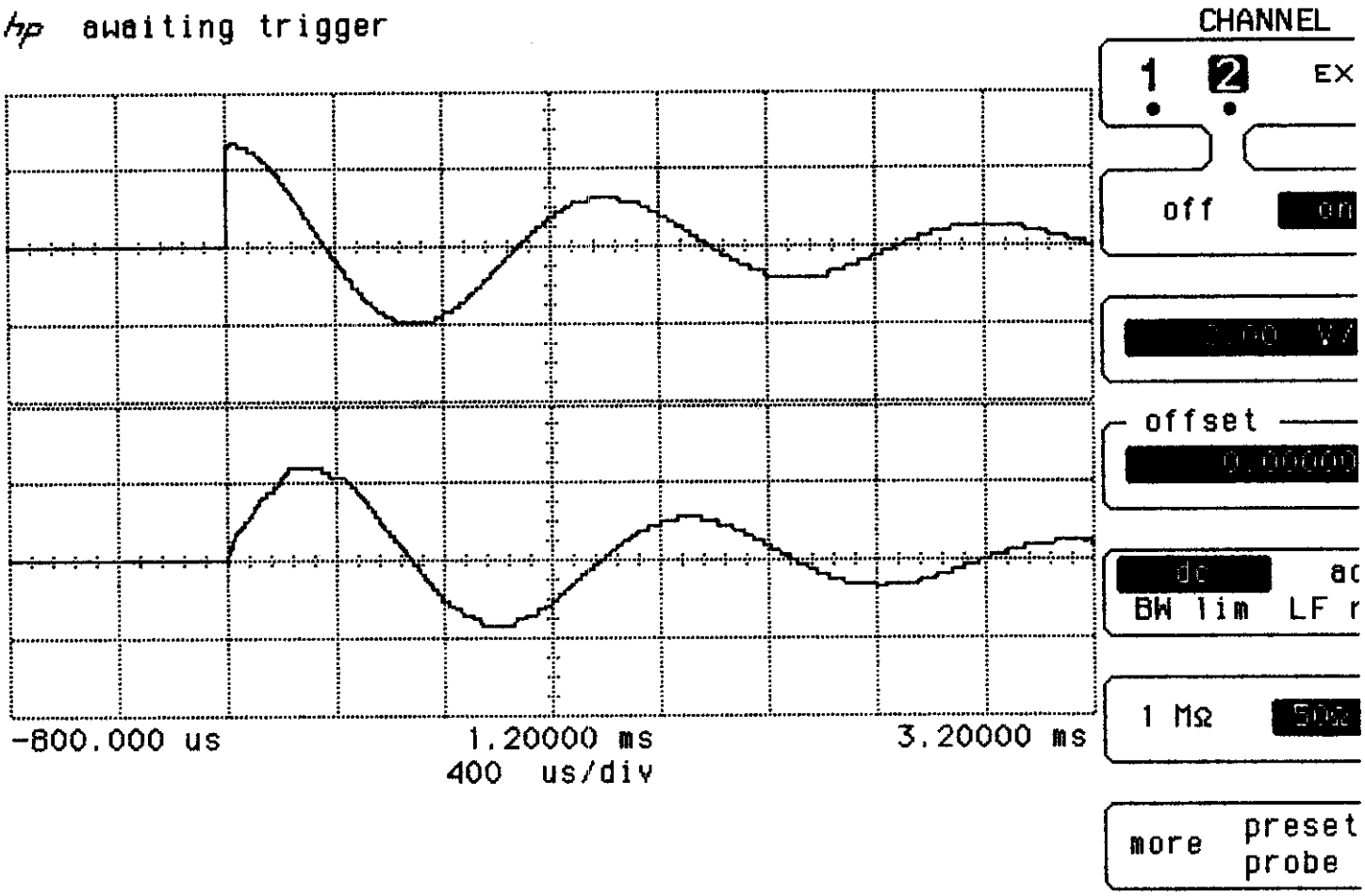

	Sensitivity	Offset	Probe	Coupling
Channel 1	350 mV/div	0.00000 V	1.000 :1	dc (1M ohm)
Channel 2	2.00 V/div	0.00000 V	1.000 :1	dc (50 ohm)

Trigger mode : Edge
On Negative Edge Of Chan2
Trigger Level
Chan2 = 125.000 mV (noise reject ON)
Holdoff = 40.000 ns

Q1 1st 500V, 15:37 3/10/04 MQXB11

18 LMQXB05

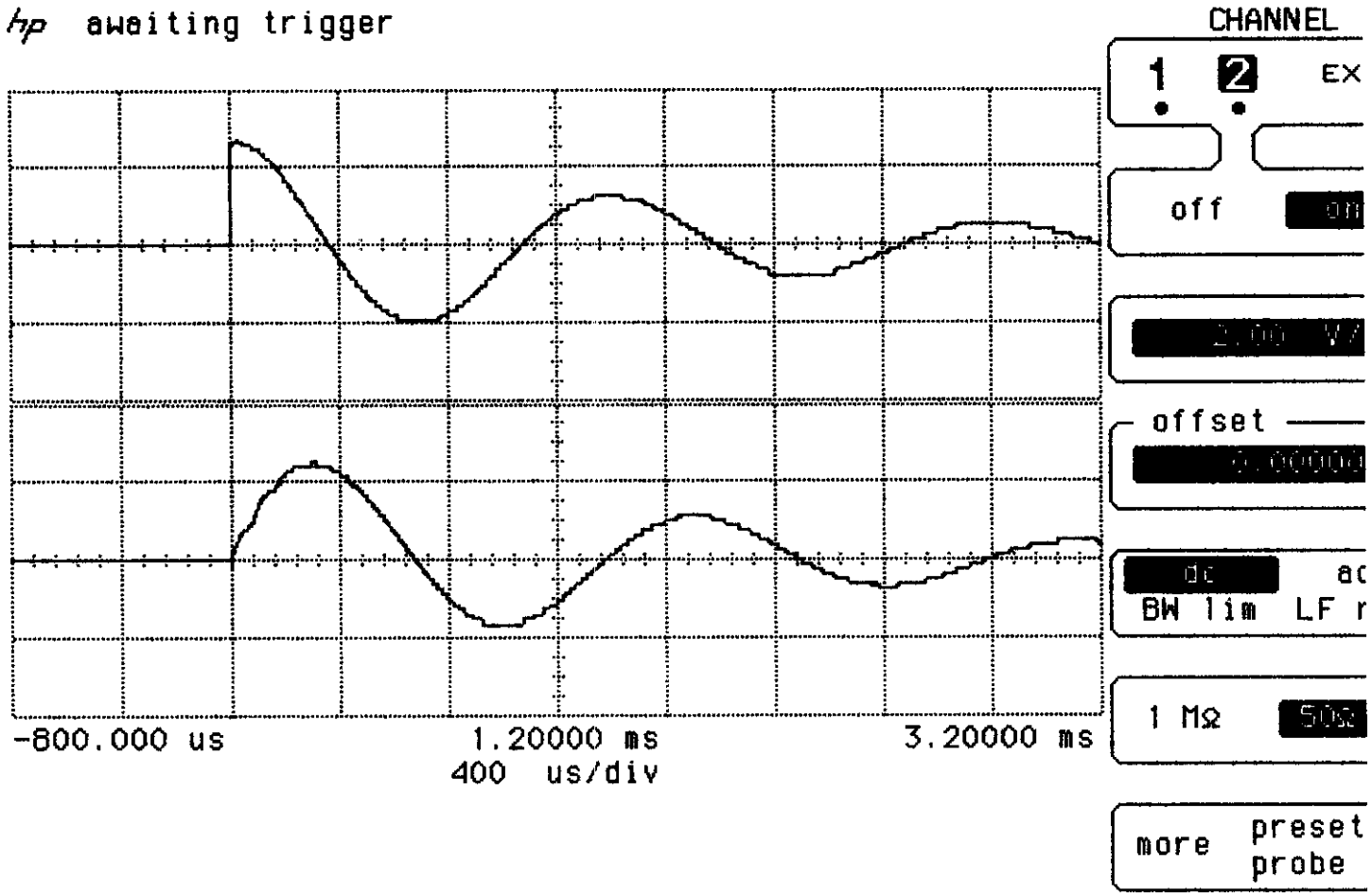

	Sensitivity	Offset	Probe	Coupling
Channel 1	350 mV/div	0.00000 V	1.000 :1	dc (1M ohm)
Channel 2	2.00 V/div	0.00000 V	1.000 :1	dc (50 ohm)

Trigger mode : Edge
On Negative Edge Of Chan2
Trigger Level
Chan2 = 125.000 mV (noise reject ON)
Holdoff = 40.000 ns

Q2 1st 500V, 15:33 3/10/04 MQXB 11

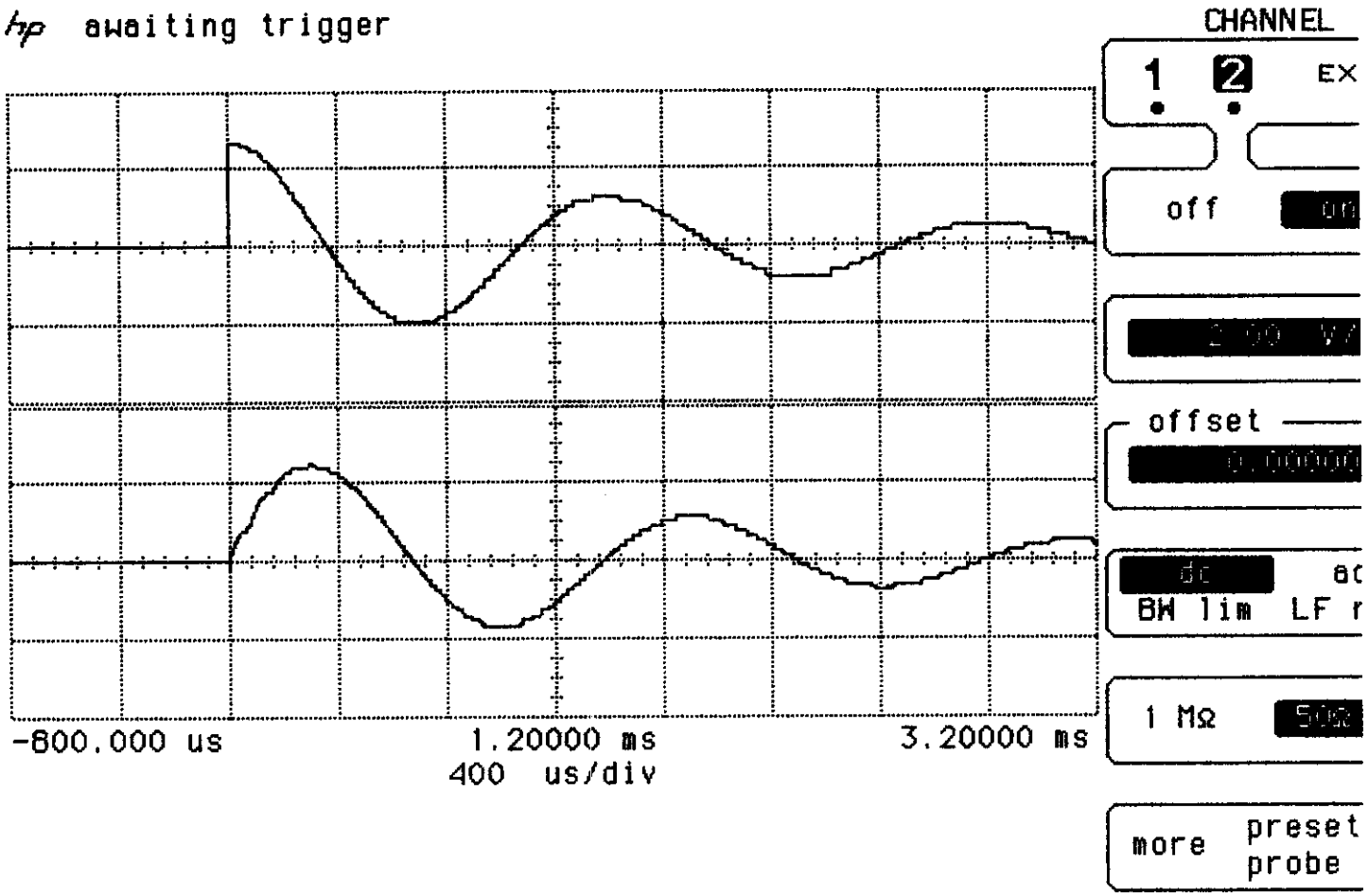

	Sensitivity	Offset	Probe	Coupling
Channel 1	350 mV/div	0.00000 V	1.000 :1	dc (1M ohm)
Channel 2	2.00 V/div	0.00000 V	1.000 :1	dc (50 ohm)

Trigger mode : Edge
On Negative Edge Of Chan2
Trigger Level
Chan2 = 125.000 mV (noise reject ON)
Holdoff = 40.000 ns

Q2 2nd 500V, 15:35 3/10/04 MQXB11

20 LMQXB05

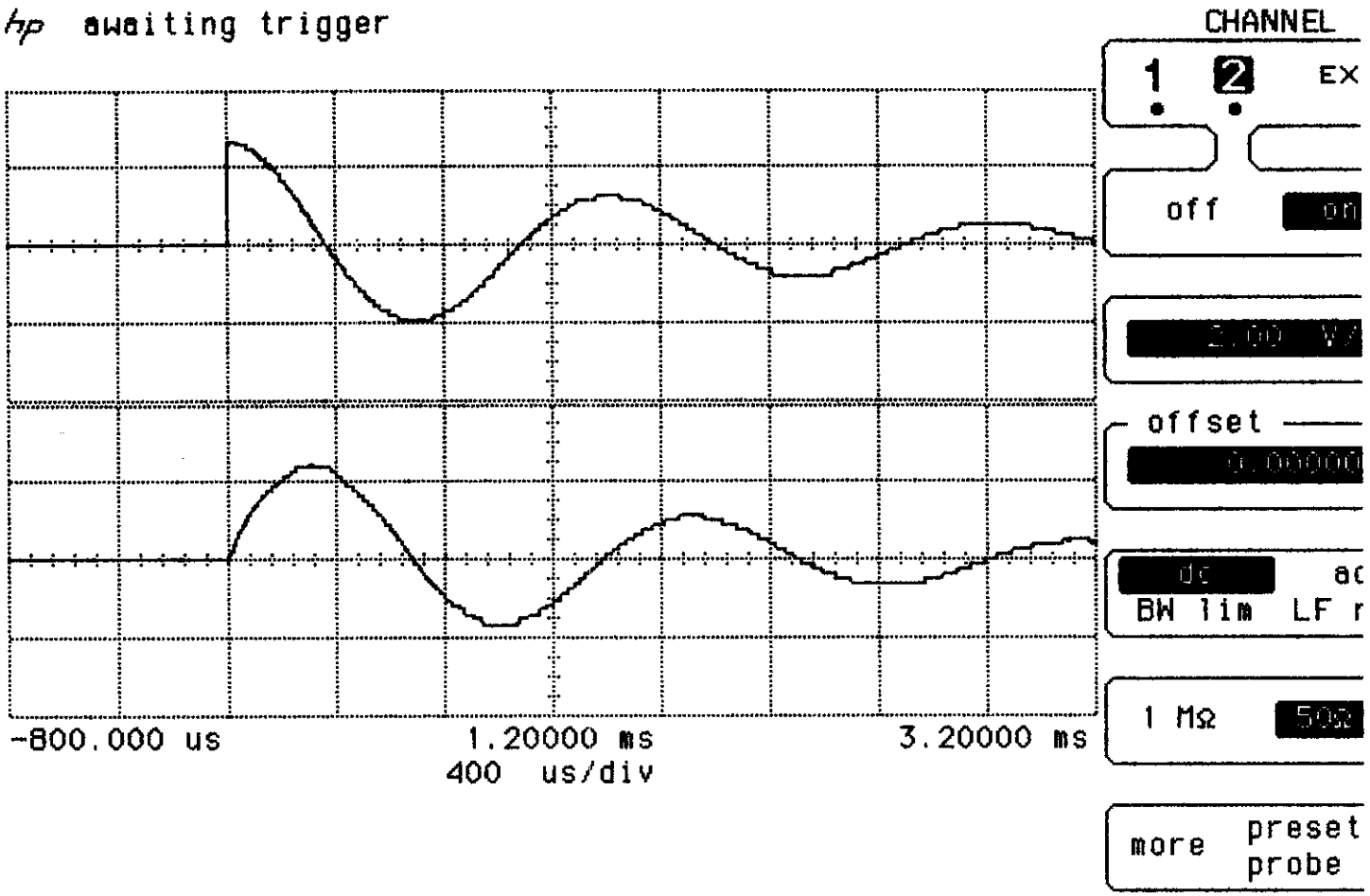

	Sensitivity	Offset	Probe	Coupling
Channel 1	350 mV/div	0.00000 V	1.000 :1	dc (1M ohm)
Channel 2	2.00 V/div	0.00000 V	1.000 :1	dc (50 ohm)

Trigger mode : Edge
On Negative Edge Of Chan2
Trigger Level
Chan2 = 125.000 mV (noise reject ON)
Holdoff = 40.000 ns

Q3 2nd 500V, 15:31 3/10/04

21 LMQXB05

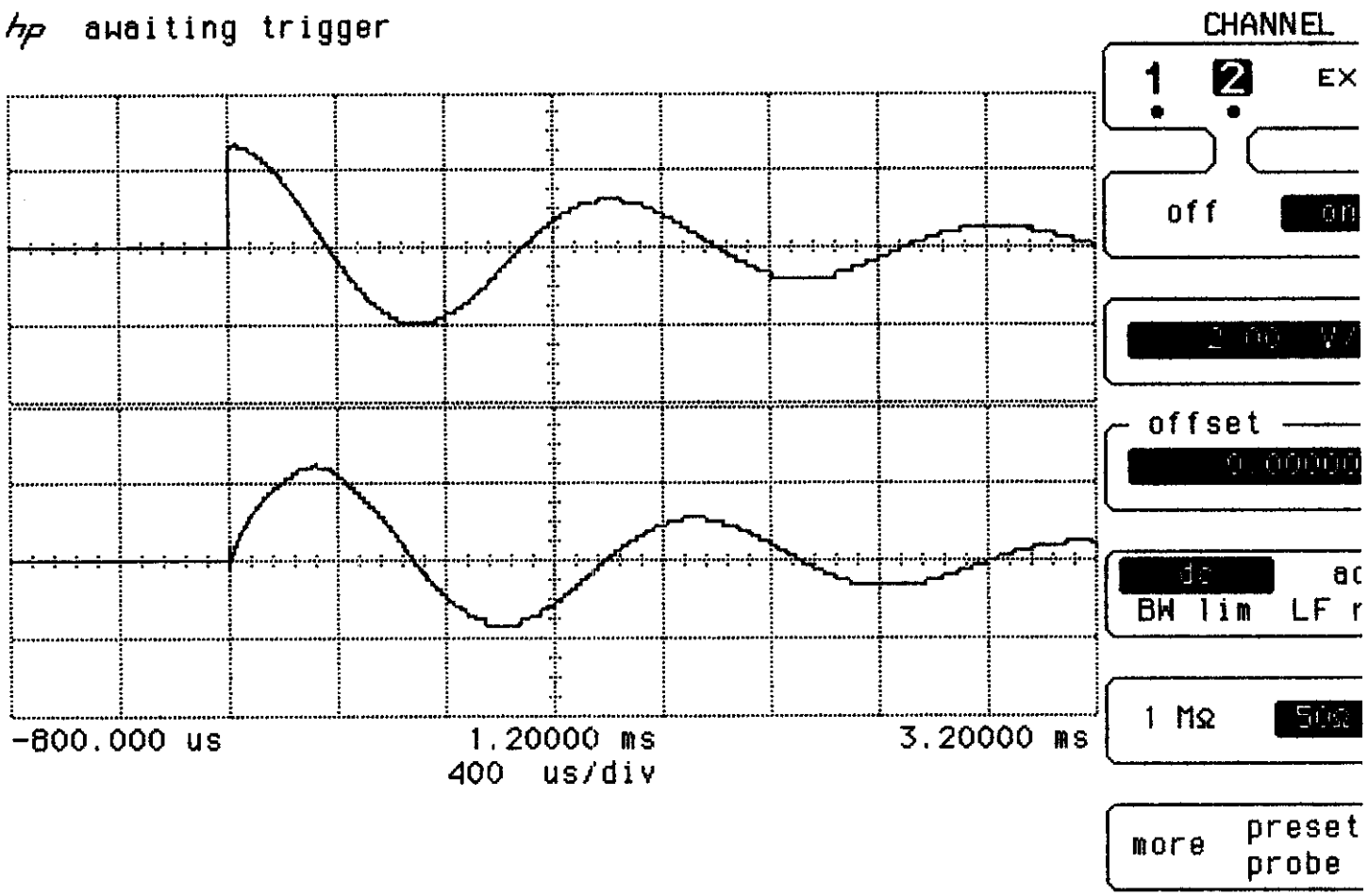

	Sensitivity	Offset	Probe	Coupling
Channel 1	350 mV/div	0.00000 V	1.000 :1	dc (1M ohm)
Channel 2	2.00 V/div	0.00000 V	1.000 :1	dc (50 ohm)

Trigger mode : Edge
On Negative Edge Of Chan2
Trigger Level
Chan2 = 125.000 mV (noise reject ON)
Holdoff = 40.000 ns

Q3 1st 500V, 15:29 3/10/04 MQx B11

22 LMQXB05

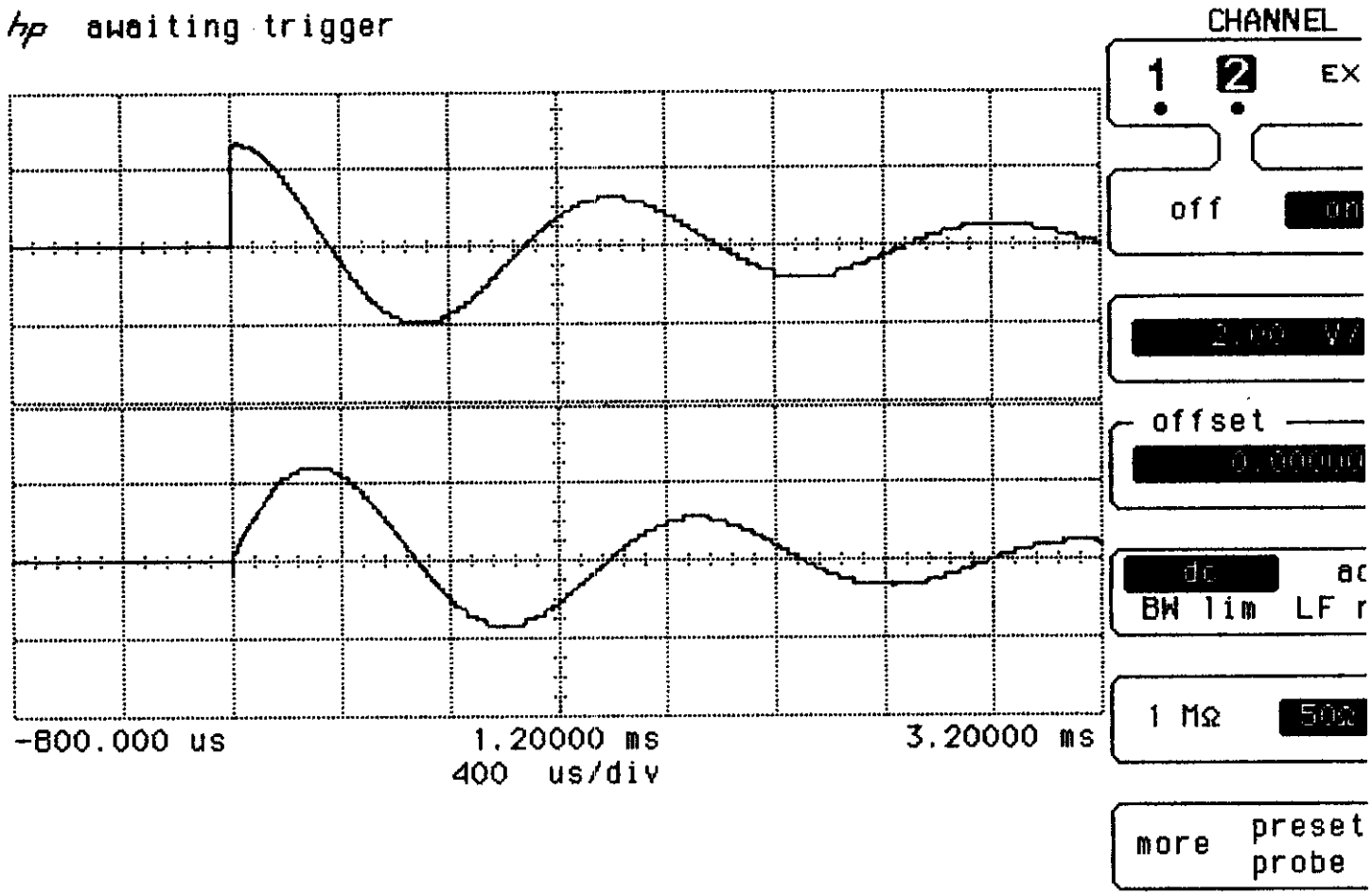

	Sensitivity	Offset	Probe	Coupling
Channel 1	350 mV/div	0.00000 V	1.000 :1	dc (1M ohm)
Channel 2	2.00 V/div	0.00000 V	1.000 :1	dc (50 ohm)

Trigger mode : Edge
On Negative Edge Of Chan2
Trigger Level
Chan2 = 125.000 mV (noise reject ON)
Holdoff = 40.000 ns

Q4 2nd 500V, 15:27 3/10/04 MQXB11

23 LMQXB05

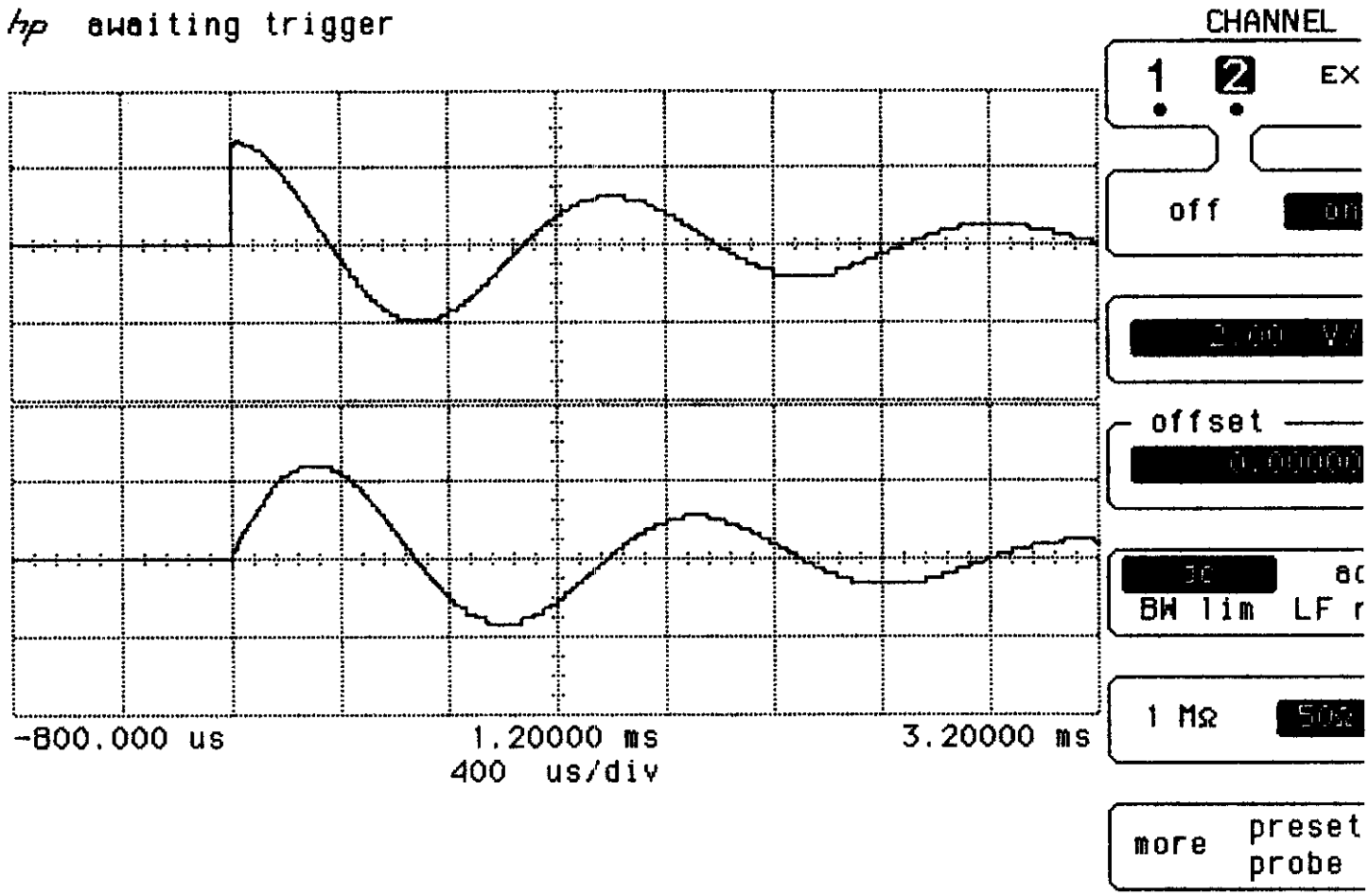

	Sensitivity	Offset	Probe	Coupling
Channel 1	350 mV/div	0.00000 V	1.000 :1	dc (1M ohm)
Channel 2	2.00 V/div	0.00000 V	1.000 :1	dc (50 ohm)

Trigger mode : Edge
On Negative Edge Of Chan2
Trigger Level
Chan2 = 125.000 mV (noise reject ON)
Holdoff = 40.000 ns

Q4 18T 500V, 15:25 3/10/04 MQXB11

24 LMQXB05

hp awaiting trigger

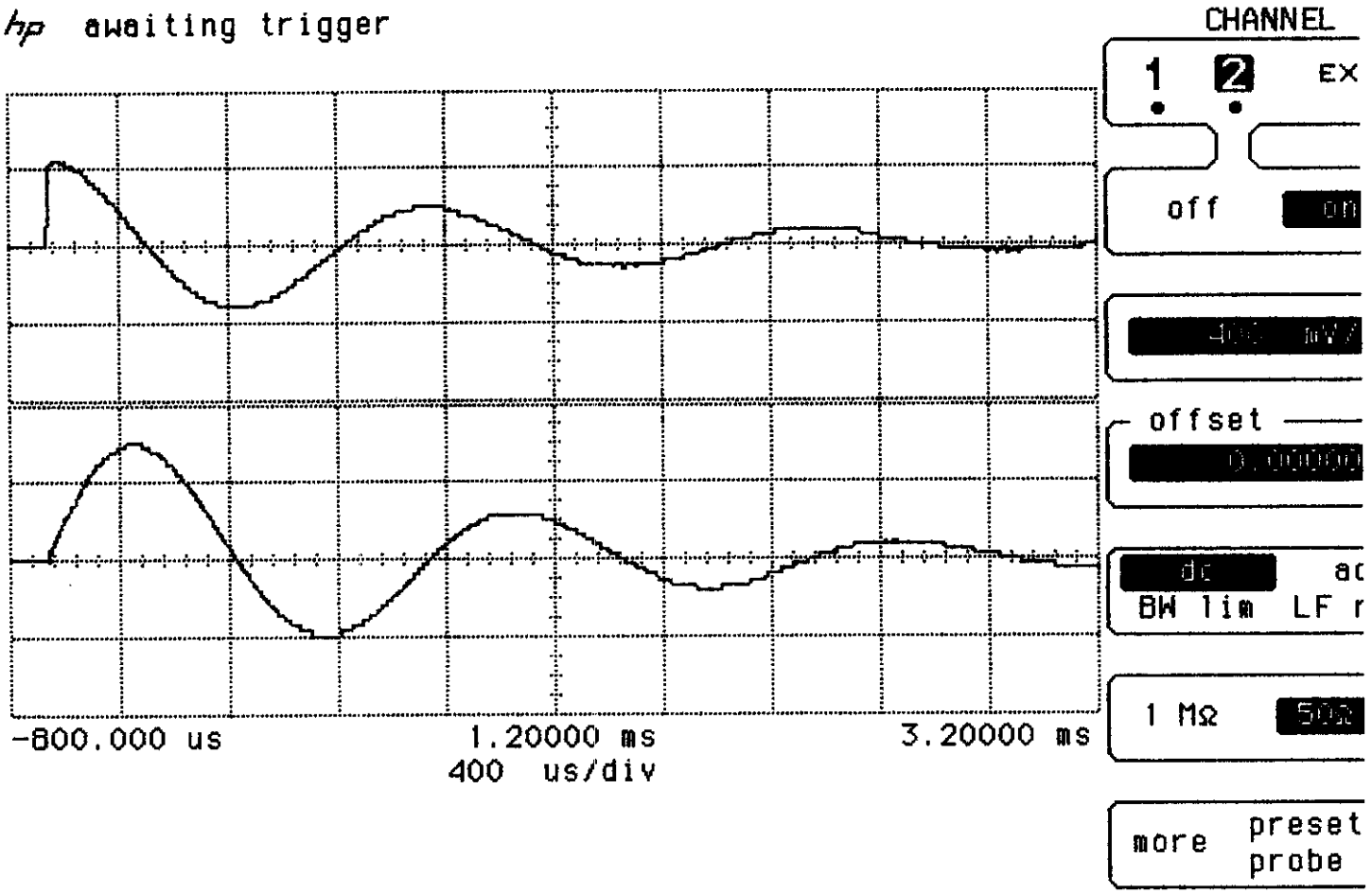

	Sensitivity	Offset	Probe	Coupling
Channel 1	100 mV/div	0.00000 V	1.000 :1	dc (1M ohm)
Channel 2	400 mV/div	0.00000 V	1.000 :1	dc (50 ohm)

Trigger mode : Edge
On Negative Edge Of Chan2
Trigger Level
Chan2 = 125.000 mV (noise reject ON)
Holdoff = 40.000 ns

Q4 2nd 100V, 15:21 3/10/04 MQXB11

25 LMQXB05

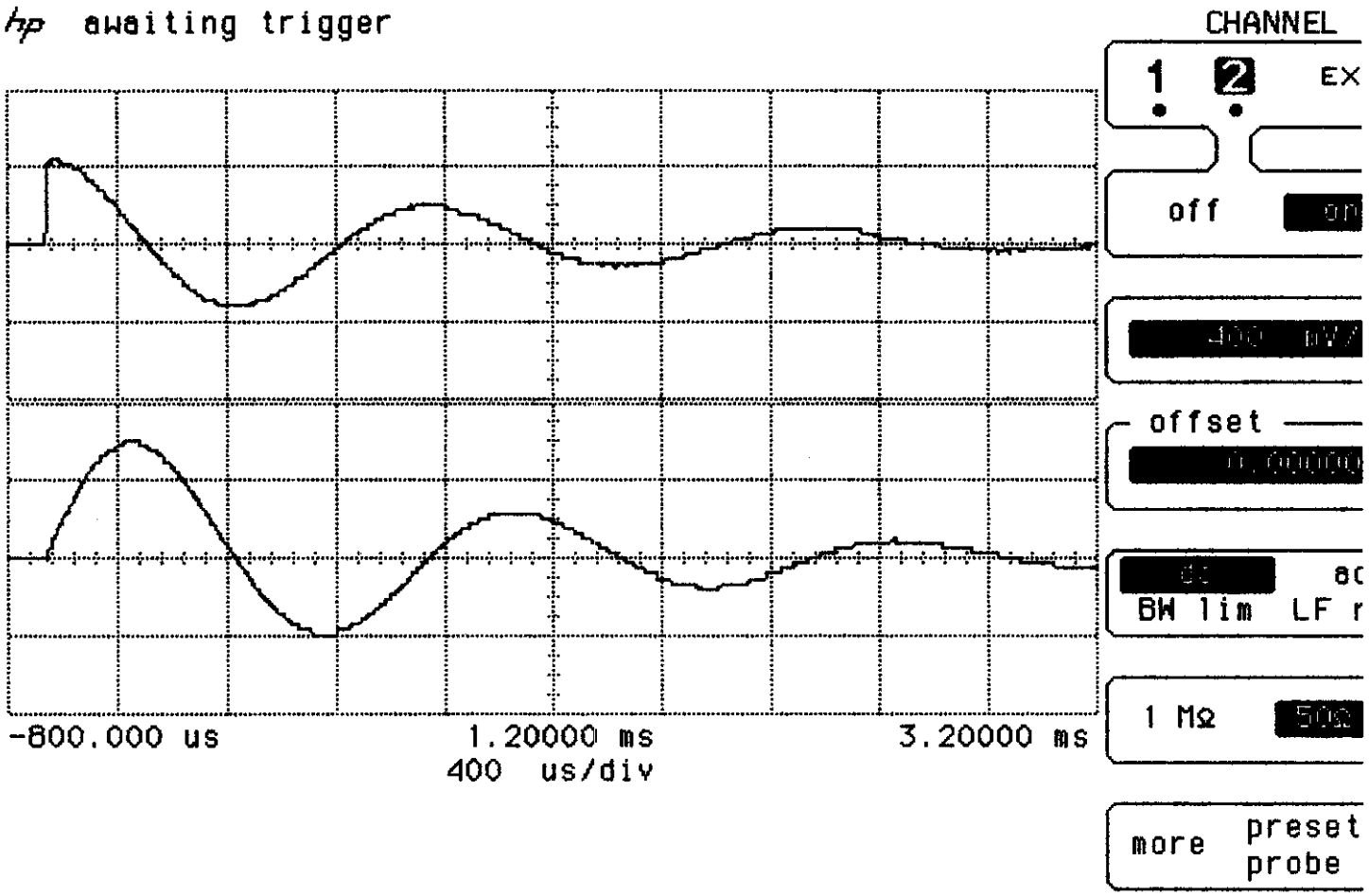

	Sensitivity	Offset	Probe	Coupling
Channel 1	100 mV/div	0.00000 V	1.000 :1	dc (1M ohm)
Channel 2	400 mV/div	0.00000 V	1.000 :1	dc (50 ohm)

Trigger mode : Edge
On Negative Edge Of Chan2
Trigger Level
Chan2 = 125.000 mV (noise reject ON)
Holdoff = 40.000 ns

Q4 1st 100V, 15:20 3/10/04 MQXB11

26 LMQXB05

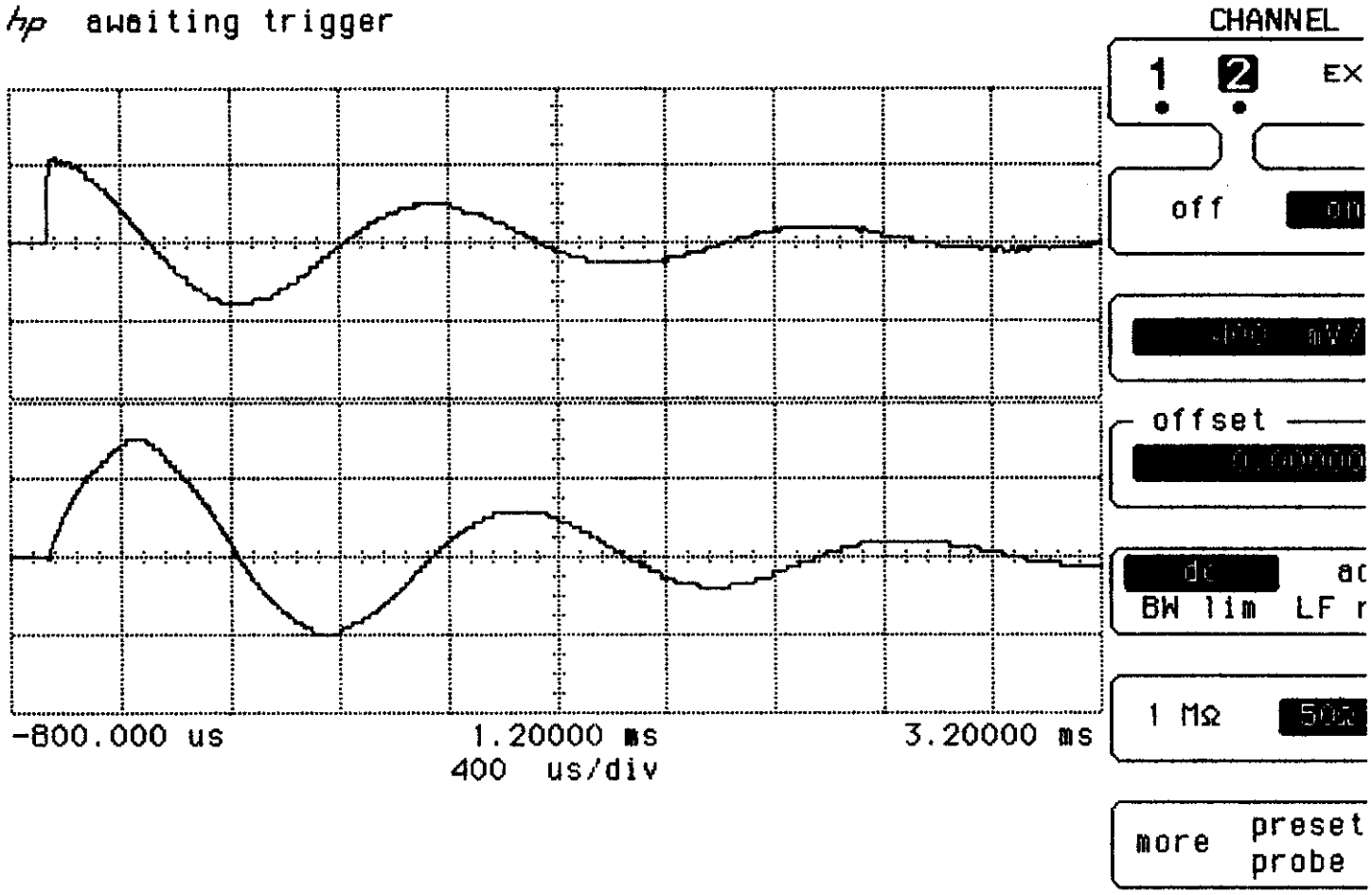

	Sensitivity	Offset	Probe	Coupling
Channel 1	100 mV/div	0.00000 V	1.000 :1	dc (1M ohm)
Channel 2	400 mV/div	0.00000 V	1.000 :1	dc (50 ohm)

Trigger mode : Edge
On Negative Edge Of Chan2
Trigger Level
Chan2 = 125.000 mV (noise reject ON)
Holdoff = 40.000 ns

Q3 2nd 100V, 15:16 3/10/04 MQXB11

27 LMQXBØ5

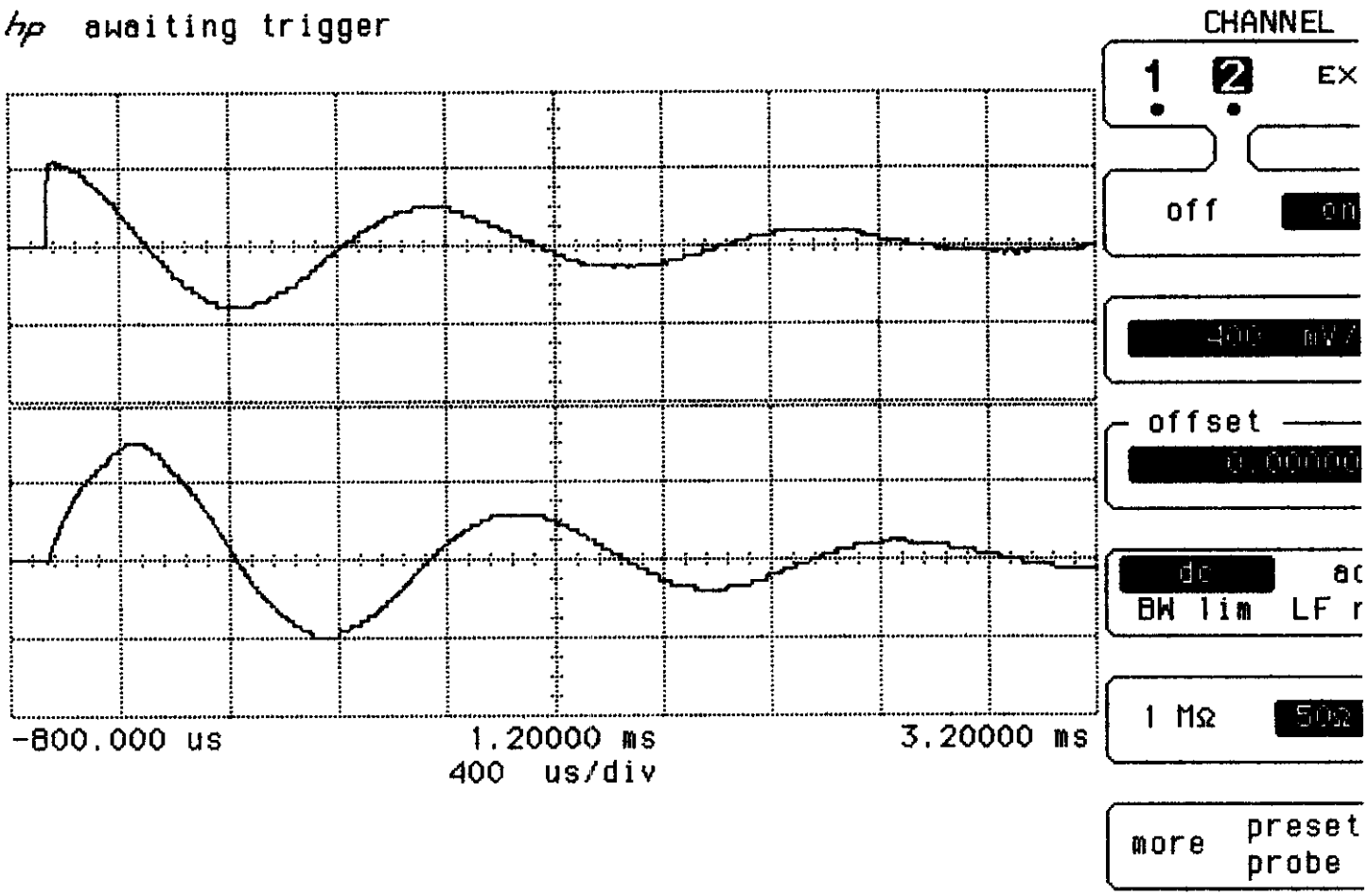

	Sensitivity	Offset	Probe	Coupling
Channel 1	100 mV/div	0.00000 V	1.000 :1	dc (1M ohm)
Channel 2	400 mV/div	0.00000 V	1.000 :1	dc (50 ohm)

Trigger mode : Edge
On Negative Edge Of Chan2
Trigger Level
Chan2 = 125.000 mV (noise reject ON)
Holdoff = 40.000 ns

Q3 1st 100V, 15:15 3/10/03 MQxB11

LMQXB05

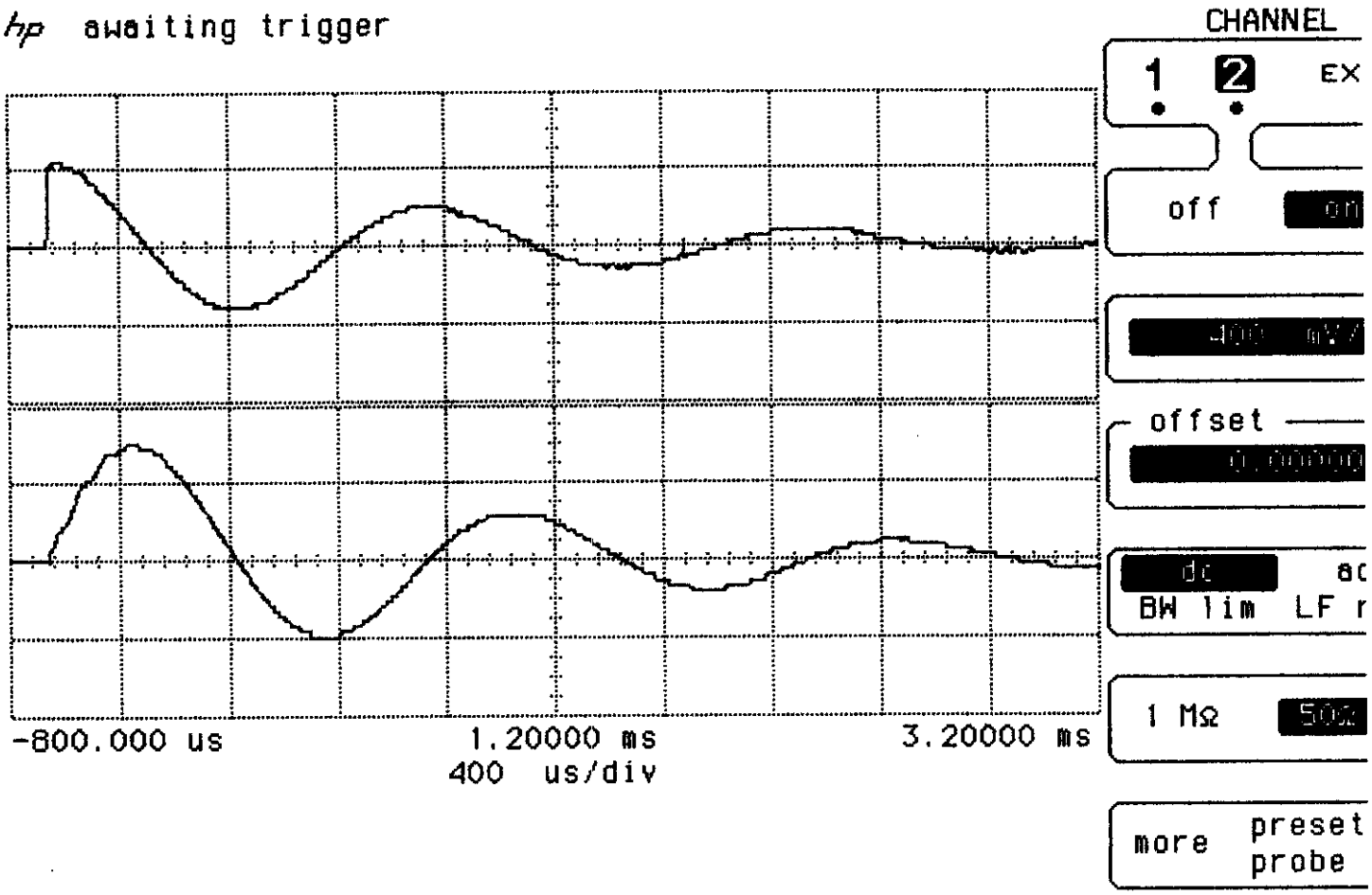

	Sensitivity	Offset	Probe	Coupling
Channel 1	100 mV/div	0.00000 V	1.000 :1	dc (1M ohm)
Channel 2	400 mV/div	0.00000 V	1.000 :1	dc (50 ohm)

Trigger mode : Edge
On Negative Edge Of Chan2
Trigger Level
Chan2 = 125.000 mV (noise reject ON)
Holdoff = 40.000 ns

Q2 2nd 100V, 15:12 3/10/03 MQXB11

29 LMQXB05

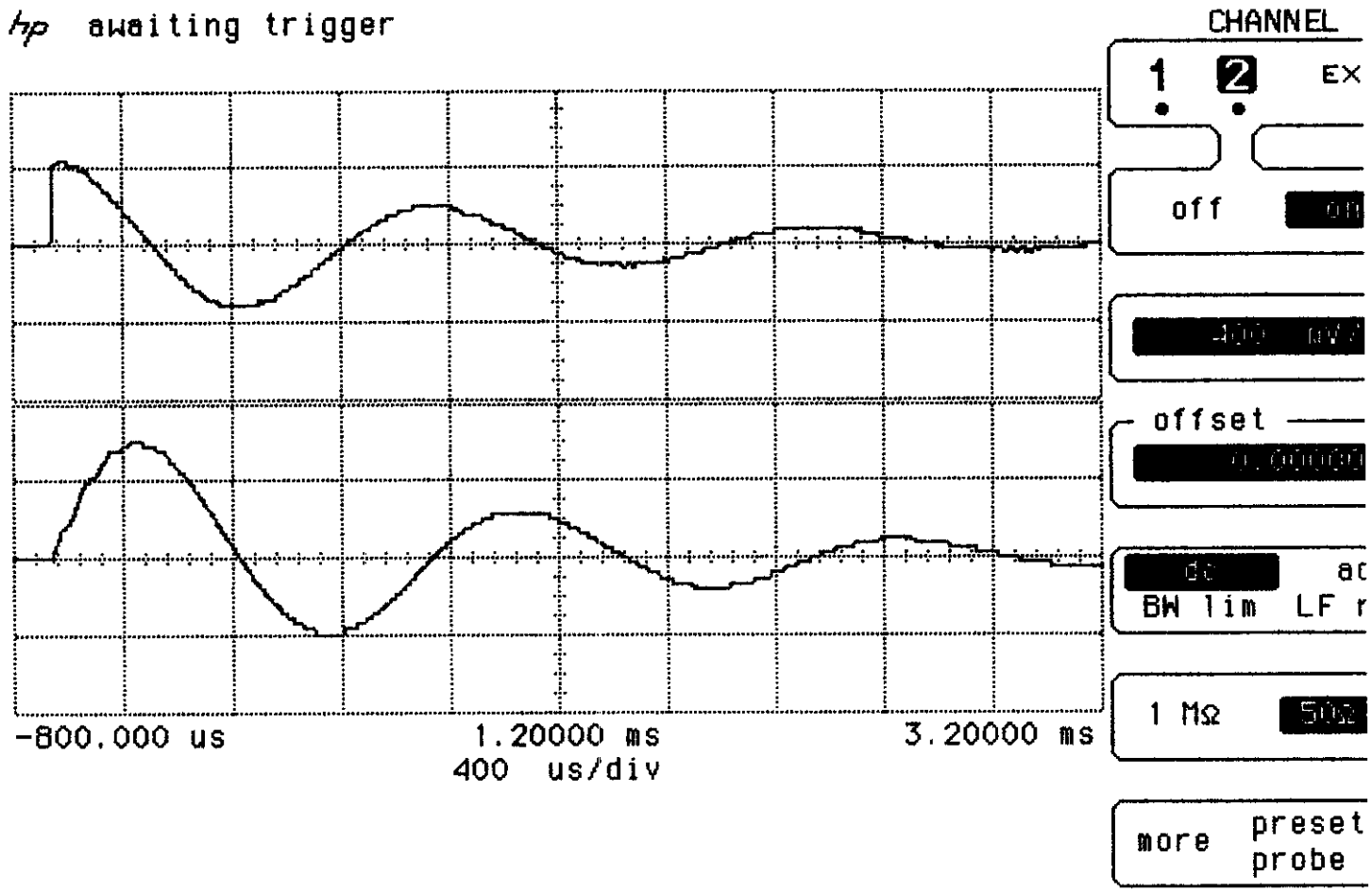

	Sensitivity	Offset	Probe	Coupling
Channel 1	100 mV/div	0.00000 V	1.000 :1	dc (1M ohm)
Channel 2	400 mV/div	0.00000 V	1.000 :1	dc (50 ohm)

Trigger mode : Edge
On Negative Edge Of Chan2
Trigger Level
Chan2 = 125.000 mV (noise reject ON)
Holdoff = 40.000 ns

Q2 1st 100V, 15:11 3/10/03 MQxB11

30 LMQXBØ5

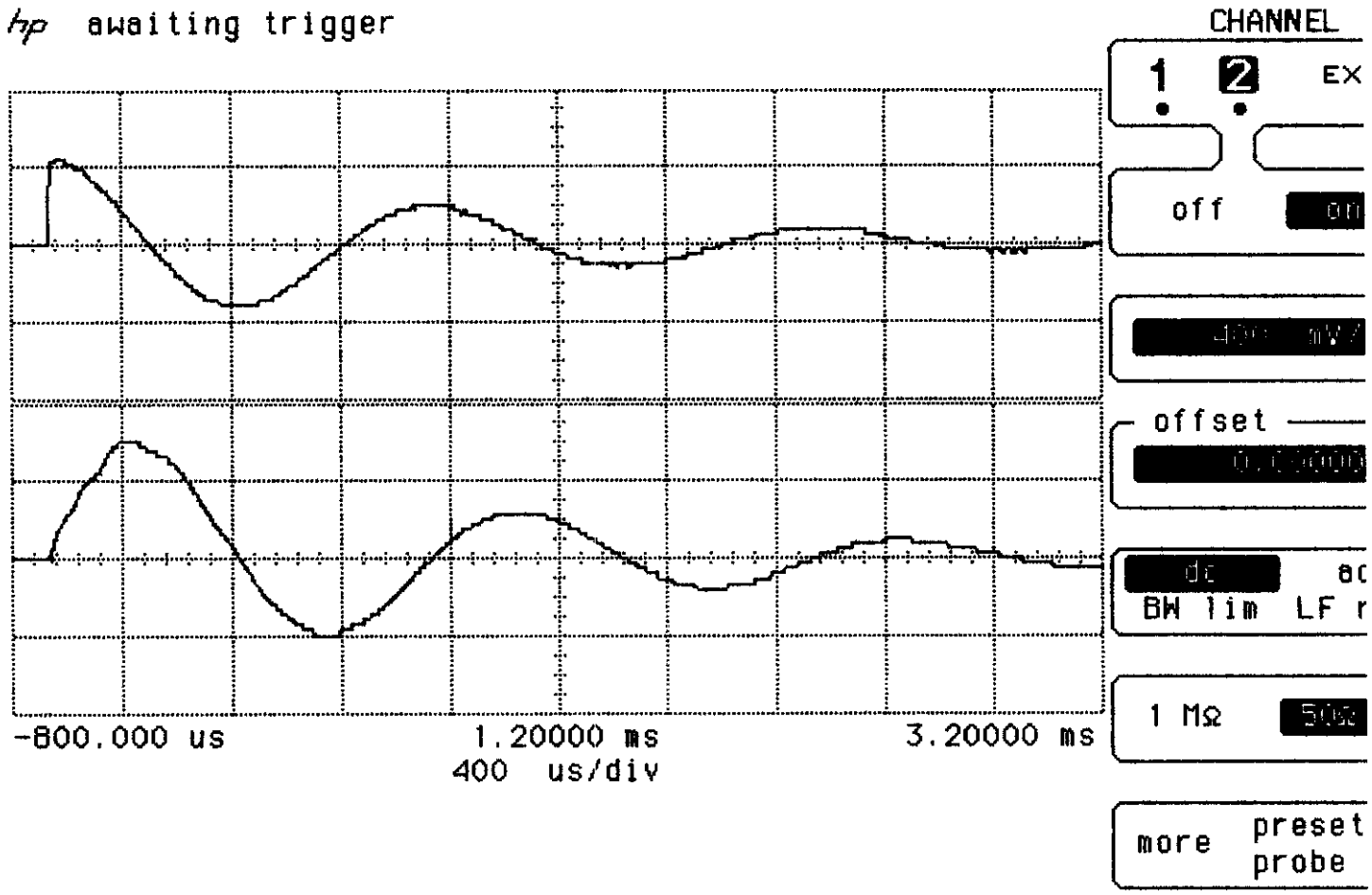

	Sensitivity	Offset	Probe	Coupling
Channel 1	100 mV/div	0.00000 V	1.000 :1	dc (1M ohm)
Channel 2	400 mV/div	0.00000 V	1.000 :1	dc (50 ohm)

Trigger mode : Edge
On Negative Edge Of Chan2
Trigger Level
Chan2 = 125.000 mV (noise reject ON)
Holdoff = 40.000 ns

Q1 1M 100V, 15:06 3/10/03 MQXB11

31 LMQXB05

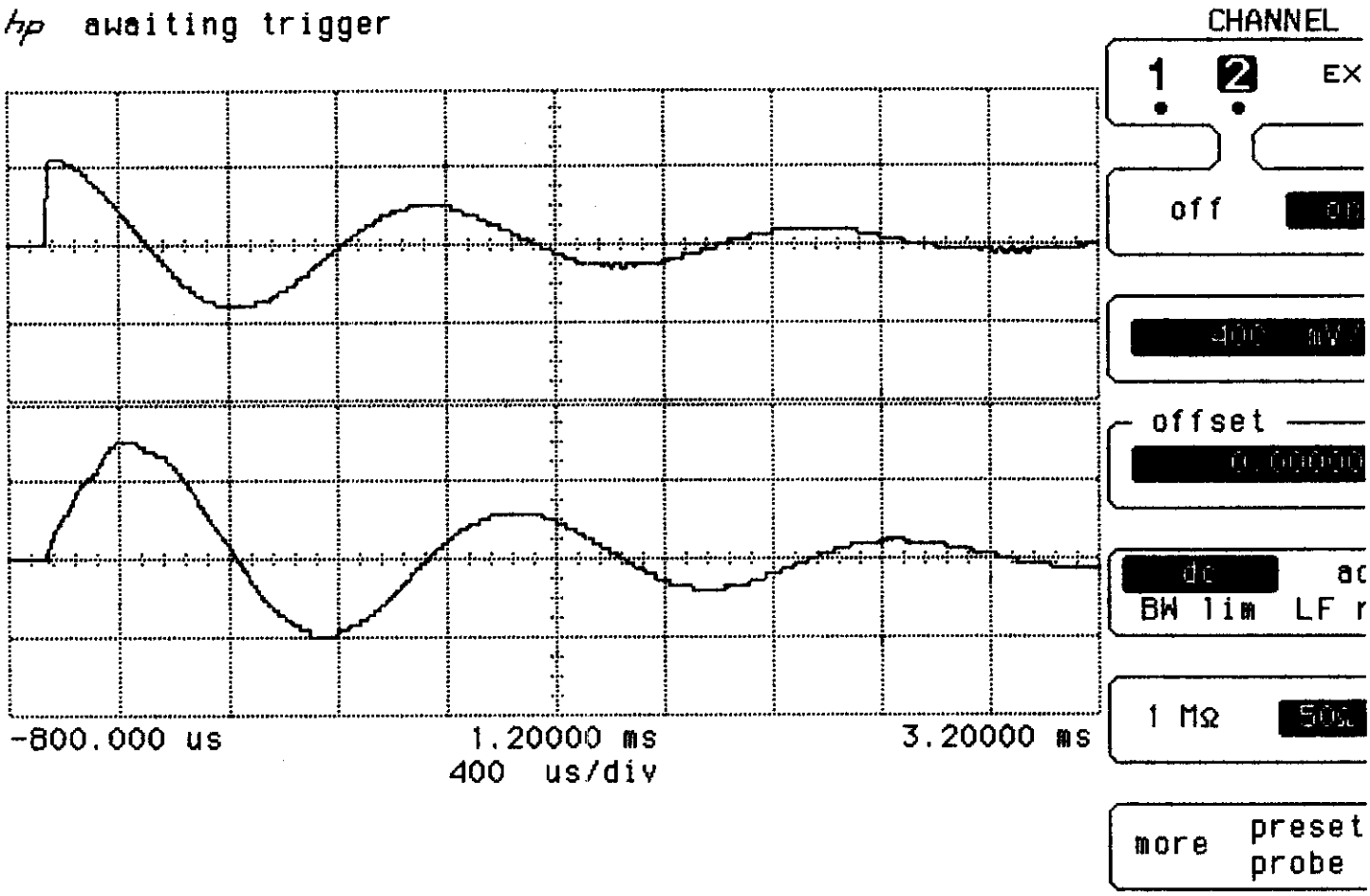

	Sensitivity	Offset	Probe	Coupling
Channel 1	100 mV/div	0.00000 V	1.000 :1	dc (1M ohm)
Channel 2	400 mV/div	0.00000 V	1.000 :1	dc (50 ohm)

Trigger mode : Edge
On Negative Edge Of Chan2
Trigger Level
Chan2 = 125.000 mV (noise reject ON)
Holdoff = 40.000 ns

Q1 2nd 100V, 15:07 3/10/03 MQXB11

32 LMQXB05

Traveler Title:	Specification No:	Revision:	DR No:
Q2 LMQXB Cold Mass Module Assembly Traveler	5520-TR-333643	B	HGQ-0448

Step No:	Drawing No:	Routing Form No:	Serial No:	Rework ID:
13.3	ME-390309		LMQXB05	0

Discrepancy Description:

Coils to heaters and ground hipot failure. Failure occurred at 1200V, 100uA leakage.

JAN 20 2005

Originator: Damon Bice

Date: 2/17/2004

Cause of Nonconformance:

This failure was due to electrical current spikes during ramp to 5000 V. This is not a real Hipot failure.

Responsible Authority: Rodger Bossert

Date: 12/27/2004

Disposition:

Lower ramp rate to 3V/sec, and remeasure.

Responsible Authority: Rodger Bossert

Date: 12/27/2004

Corrective Action to Prevent Recurrence:

Continue hipotting using lower ramp rate of 3V/sec. No traveler change.

Responsible Authority: Rodger Bossert

Date: 12/27/2004

Corrective Action/Disposition Verified By: John Szostak

Date: 1/18/2005

Will Configuration be affected?: ☐ YES ☑ NO

Identified problem area:

☐ Material ☐ Manpower ☑ Method ☐ Machine ☐ Measurement

Reviewed By: Bob Jensen

Date: 1/20/2005

1.0 Electrical Inspection

1.1 Perform an electrical inspection on each of the Individual Quadrants and the Cold Masses. Refer to the Valhalla and Leader Free Standing Coil Measurement Procedure (ES-292306).

To measure the resistance of a bussed Q2:

1. Use Valhalla Scientific 4300B digital micro-ohmmeter.
2. Set Test Current to 1 amp.
3. Set Scale to 2V full scale.
4. Turn temperature compensation on.
5. Turn test current off.
6. Put jumper between Q2a Q3 inner power lead and 5 KA bus as shown in figure.
7. Connect I_{HI} to the 5KA bus (Q2a Q3 inner power lead) as shown in figure.
8. Connect I_{LO} to the Q2b Q3 inner power lead as shown in figure.
9. Turn test current on.
10. Connect V_{HI} and V_{LO} buttons to voltage taps as shown below.
11. Read resistance and record in traveler.

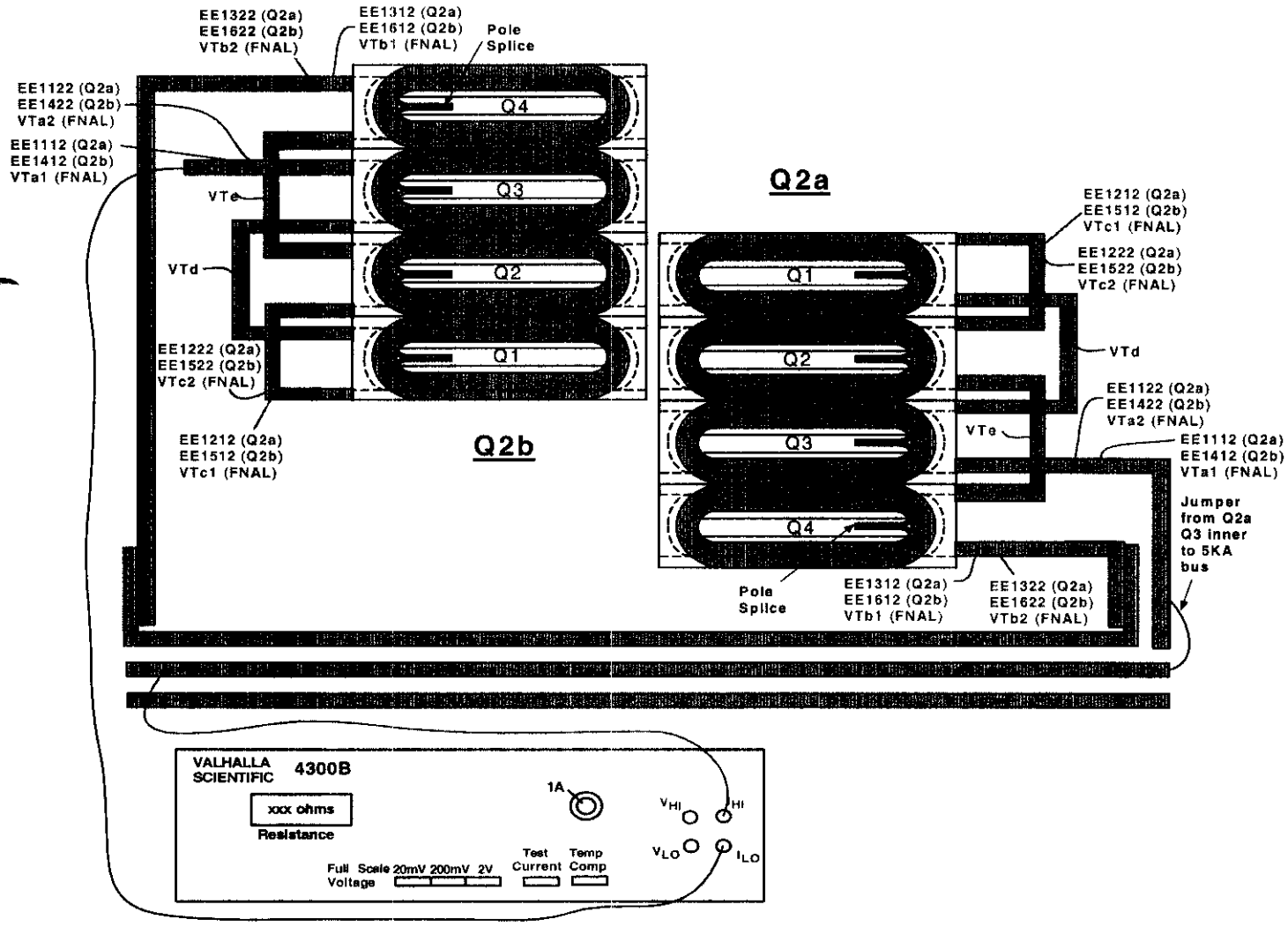

(Q2a) Resistance				Nominal ~ 560 to 585 mΩ
Voltage Tap Serial Numbers				Quadrant Total Resistance
Connect	Fermi	CERN	Quadrant	
V_{HI}	VTdQ2a	EMPTY	Quadrant 1	570.6 mΩ
V_{LO}	VTc1Q2a	EE1212		
V_{HI}	VTc1Q2a	EE1212	Quadrant 2	570.5 mΩ
V_{LO}	VTeQ2a	EMPTY		
V_{HI}	VTa1Q2a	EE1112	Quadrant 3	568.5 mΩ
V_{LO}	VTdQ2a	EMPTY		
V_{HI}	VTeQ2a	EMPTY	Quadrant 4	567.3 mΩ
V_{LO}	VTb1Q2a	EE1312		

V_{HI}	VTa1Q2a	EE1112	Total Cold Mass	Nominal ~ 2.305 Ω
V_{LO}	VTb1Q2a	EE1312		2.278 Ω

Technician(s) _____ Date 3/8/04

Check resistance of Redundant Voltage Taps.

Q2a Redundant Voltage Taps			
Connect	Fermi	CERN	Resistance
V_{HI}	VTa2Q2a	EE1122	1138.7 Ω
V_{LO}	VTc2Q2a	EE1222	
V_{HI}	VTc2Q2a	EE1222	1137.2 Ω
V_{LO}	VTb2Q2a	EE1322	

Technician(s) _____ Date 3/8/04

To measure Ls and Q of a Bussed Q2:

1. Use Hewlett Packard HP4284A digital LCR meter.
2. Turn line switch to on. The words "Measurement Display" should now be highlighted in the upper left corner of the display screen.
3. Use cursor buttons (shown in figure with arrows) to toggle down until "function" is highlighted near the upper left corner of the display screen.
4. Push the lowest of the five buttons to the right of display 3 times. (this button is shaded gray in the figure) The line in the display screen next to the second button down should now read "Ls-Q" and "function" near the upper left corner of the display should have the option "Ls-Q" chosen.
5. Scroll to "integer" using the cursor buttons. "Integer" will have the option "medium" chosen.
6. Press the 3rd button of five. The word "medium" should change to "long".
7. Connect H_{cur} to the 5KA bus (Q2a/Q3 inner power lead as shown in figure).
8. Connect L_{cur} to Q2b/Q3 inner power lead as shown in figure.
9. Connect H_{pot} and L_{pot} buttons to voltage taps as shown below.
10. Read Ls and Q from display and record in traveler.

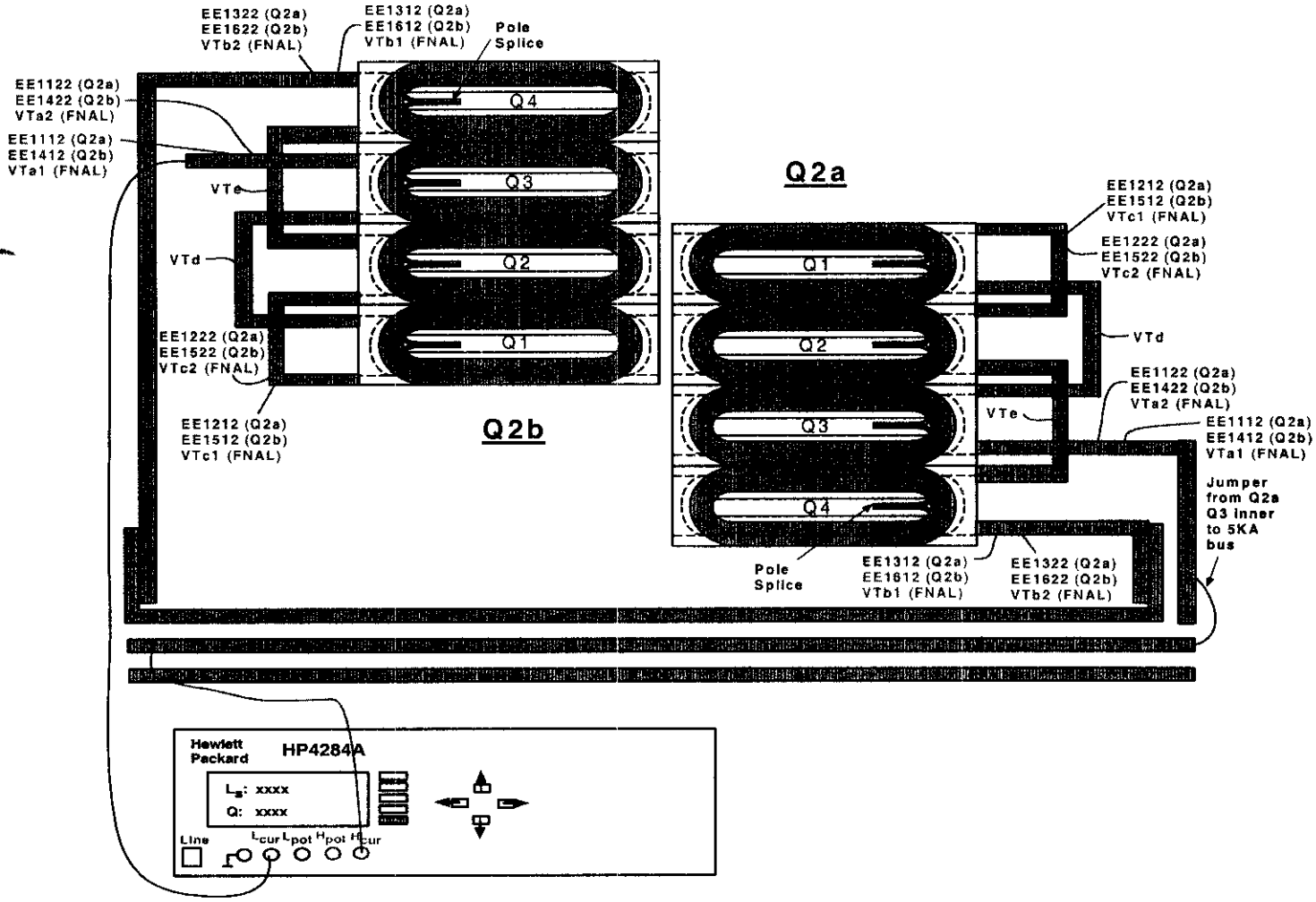

(Q2a) Inductance				Nominal ~ 2.880 to 2.935 mH
Voltage Tap Serial Numbers				Quadrant Total Inductance
Connect	Fermi	CERN	Quadrant	
H_{POT}	VTdQ2a	EMPTY	Quadrant 1	3.3502 mH
L_{POT}	VTc1Q2a	EE1212		
H_{POT}	VTc1Q2a	EE1212	Quadrant 2	3.3269 mH
L_{POT}	VTeQ2a	EMPTY		
H_{POT}	VTdQ2a	EMPTY	Quadrant 3	3.2989 mH
L_{POT}	VTa1Q2a	EE1112		
H_{POT}	VTeQ2a	EMPTY	Quadrant 4	3.3447 mH
L_{POT}	VTb1Q2a	EE1312		

H_{POT}	VTa1Q2a	EE1112	Total Cold Mass	Nominal ~ 13.3376 mH
L_{POT}	VTb1Q2a	EE1312		13.307 mH

(Q2a) Q-Factor				Nominal ~ 4.5 to 5.2
Voltage Tap Serial Numbers				Quadrant Total Q
Connect	Fermi	CERN	Quadrant	
H_{POT}	VTdQ2a	EMPTY	Quadrant 1	4.9
L_{POT}	VTc1Q2a	EE1212		
H_{POT}	VTc1Q2a	EE1212	Quadrant 2	5.0
L_{POT}	VTeQ2a	EMPTY		
H_{POT}	VTa1Q2a	EE1112	Quadrant 3	5.1
L_{POT}	VTdQ2a	EMPTY		
H_{POT}	VTeQ2a	EMPTY	Quadrant 4	4.9
L_{POT}	VTb1Q2a	EE1312		

H_{POT}	VTa1Q2a	EE1112	Total Cold Mass	Nominal ~ 5.036
L_{POT}	VTb1Q2a	EE1312		5.0

Technician(s) _____ Date 3/8/04

To measure the resistance of a bussed Q2:

1. Use Valhalla Scientific 4300B digital micro-ohmmeter.
2. Set Test Current to 1 amp.
3. Set Scale to 2V full scale.
4. Turn temperature compensation on.
5. Turn test current off.
6. Put jumper between Q2a Q3 inner power lead and 5 KA bus as shown in figure.
7. Connect I_{HI} to the 5KA bus (Q2a Q3 inner power lead) as shown in figure.
8. Connect I_{LO} to the Q2b Q3 inner power lead as shown in figure.
9. Turn test current on.
10. Connect V_{HI} and V_{LO} buttons to voltage taps as shown below.
11. Read resistance and record in traveler.

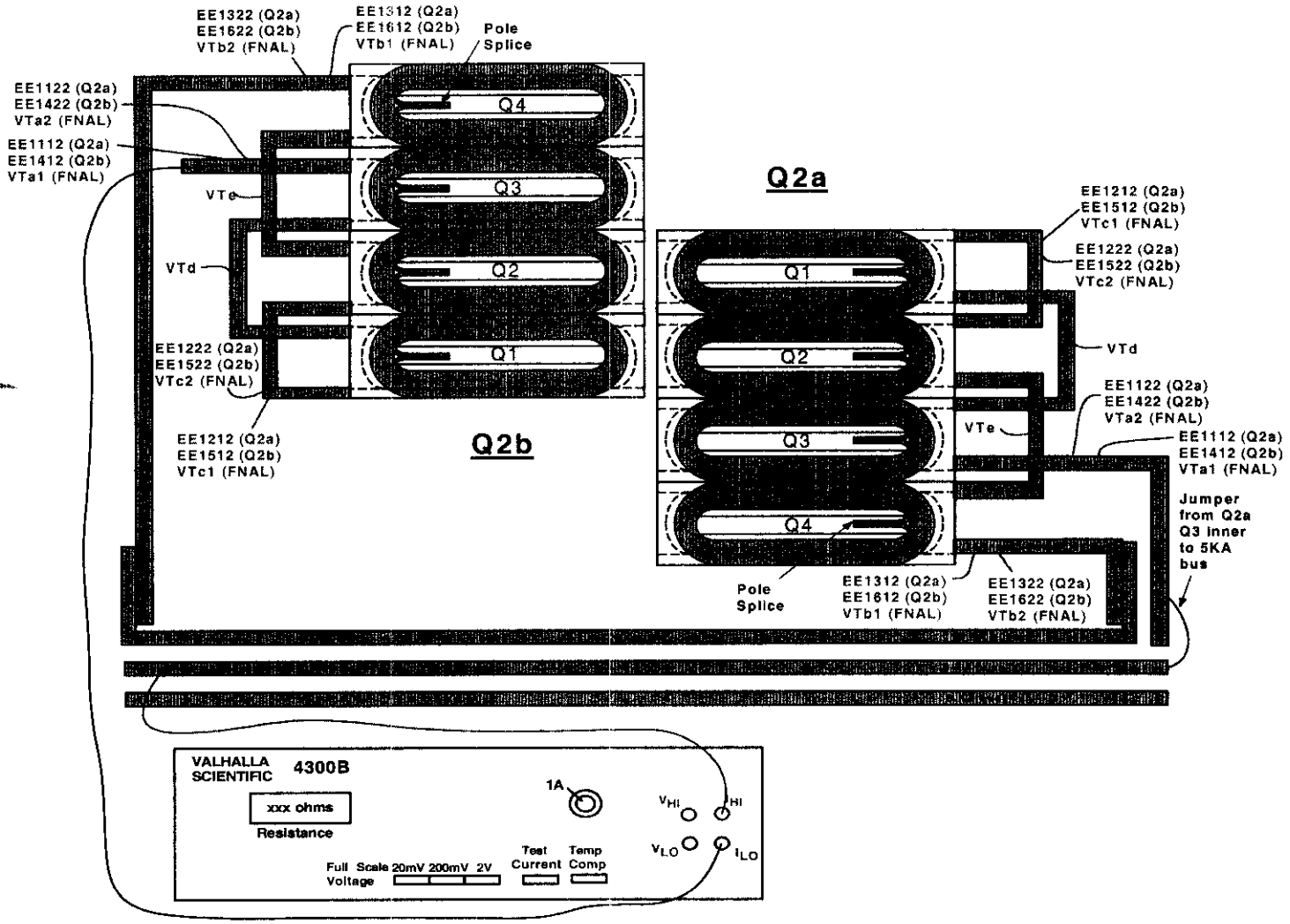

(Q2b) Resistance				Nominal ~ 560 to 585 mΩ
Voltage Tap Serial Numbers				Quadrant Total Resistance
Connect	Fermi	CERN	Quadrant	
V_{HI}	VTc1Q2b	EE1512	Quadrant 1	572.5 mΩ
V_{LO}	VTdQ2b	EMPTY		
V_{HI}	VTeQ2b	EMPTY	Quadrant 2	571.8 mΩ
V_{LO}	VTc1Q2b	EE1512		
V_{HI}	VTdQ2b	EMPTY	Quadrant 3	572.4 mΩ
V_{LO}	VTa1Q2b	EE1412		
V_{HI}	VTb1Q2b	EE1612	Quadrant 4	572.5 mΩ
V_{LO}	VTeQ2b	EMPTY		

V_{HI}	VTb1Q2b	EE1612	Total Cold Mass	Nominal ~ 2.305 Ω
V_{LO}	VTa1Q2b	EE1412		2.290 Ω

Technician(s) _____ Date 3/8/04

Check the resistance of the Redundant Voltage Taps.

Q2b Redundant Voltage Taps			
Connect	Fermi	CERN	Resistance
V_{HI}	VTc2Q2b	EE1522	1144.5 Ω
V_{LO}	VTa2Q2b	EE1422	
V_{HI}	VTb2Q2b	EE1622	1143.6 Ω
V_{LO}	VTc2Q2b	EE1522	

Technician(s) _____ Date 3/8/04

To measure Ls and Q of a Bussed Q2:

1. Use Hewlett Packard HP4284A digital LCR meter.
2. Turn line switch to on. The words "Measurement Display" should now be highlighted in the upper left corner of the display screen.
3. Use cursor buttons (shown in figure with arrows) to toggle down until "function" is highlighted near the upper left corner of the display screen.
4. Push the lowest of the five buttons to the right of display 3 times. (this button is shaded gray in the figure) The line in the display screen next to the second button down should now read "Ls-Q" and "function" near the upper left corner of the display should have the option "Ls-Q" chosen.
5. Scroll to "integer" using the cursor buttons. "Integer" will have the option "medium" chosen.
6. Press the 3rd button of five. The word "medium" should change to "long".
7. Connect H_{cur} to the 5KA bus (Q2a/Q3 inner power lead as shown in figure).
8. Connect L_{cur} to Q2b/Q3 inner power lead as shown in figure.
9. Connect H_{pot} and L_{pot} buttons to voltage taps as shown below.
10. Read Ls and Q from display and record in traveler.

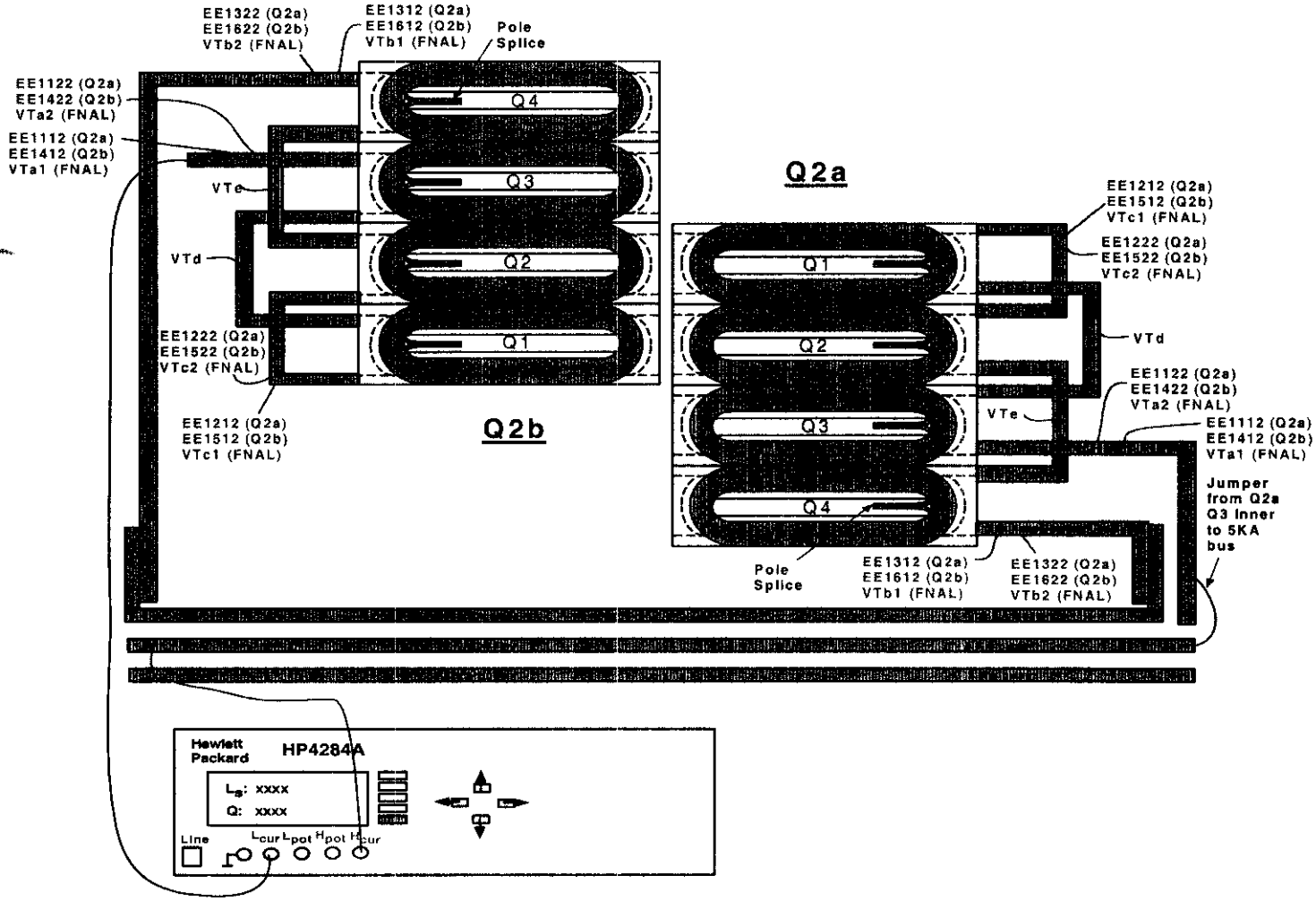

(Q2b) Inductance				Nominal ~ 2.880 to 2.935 mH
Voltage Tap Serial Numbers				Quadrant Total Inductance
Connect	Fermi	CERN	Quadrant	
H_{POT}	VTc1Q2b	EE1512	Quadrant 1	3.3363 mH
L_{POT}	VTdQ2b	EMPTY		
H_{POT}	VTeQ2b	EMPTY	Quadrant 2	3.3446 mH
L_{POT}	VTc1Q2b	EE1512		
H_{POT}	VTdQ2b	EMPTY	Quadrant 3	3.3422 mH
L_{POT}	VTa1Q2b	EE1412		
H_{POT}	VTb1Q2b	EE1612	Quadrant 4	3.3007 mH
L_{POT}	VTeQ2b	EMPTY		

H_{POT}	VTb1Q2b	EE1612	Total Cold Mass	Nominal ~ 13.3376 mH
L_{POT}	VTa1Q2b	EE1412		13.325 mH

(Q2b) Q-Factor				Nominal ~ 4.5 to 5.2
Voltage Tap Serial Numbers				Quadrant Total Q
Connect	Fermi	CERN	Quadrant	
H_{POT}	VTc1Q2b	EE1512	Quadrant 1	5.0
L_{POT}	VTdQ2b	EMPTY		
H_{POT}	VTeQ2b	EMPTY	Quadrant 2	4.9
L_{POT}	VTc1Q2b	EE1512		
H_{POT}	VTdQ2b	EMPTY	Quadrant 3	5.0
L_{POT}	VTa1Q2b	EE1412		
H_{POT}	VTb1Q2b	EE1612	Quadrant 4	5.1
L_{POT}	VTeQ2b	EMPTY		

H_{POT}	VTb1Q2b	EE1612	Total Cold Mass	Nominal ~ 5.036
L_{POT}	VTa1Q2b	EE1412		5.0

Technician(s) _____ Date 3/8/04

To measure the resistance of a Thermometer (RTD):

1. Use Hewlett Packard HP3457A digital multimeter.
2. Record temperature of building within +/- 5 degrees.
3. Press line button to turn line on.
4. Connect wires as shown in Figure below.
   U+ (Black) to Sense HI
   I+ (Yellow) to Input HI
   U- (Red) to Sense LO
   I- (Green) to Input LO
5. Push blue button (function key) once.
6. Push OHMF button.
7. Verify arrow in readout is above the 4W□ (meaning a 4 wire resistance measurement).
8. Read resistance in ohms and record in traveler.

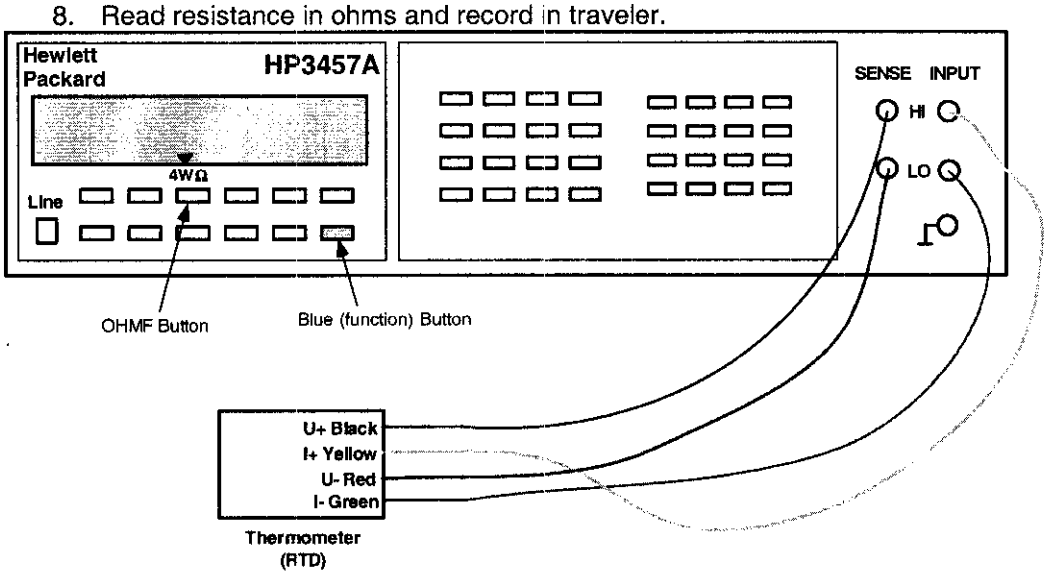

To measure the resistance of a Cryogenic (Warm-up) Heater

1. Use Hewlett Packard HP3457A digital multimeter.
2. Record temperature of building within +/- 5 degrees.
3. Press line button to turn line on.
4. Connect wires as shown in Figure below.
5. Push blue button (function key) once.
6. Push OHMF button.
7. Verify arrow in readout is above the 4W□ (meaning a 4 wire resistance measurement).
   Note: Although this is technically a 4 wire measurement, it is effectively a 2 wire measurement, since there are only 2 wires connected to each heater.
8. Read resistance in ohms and record in traveler.

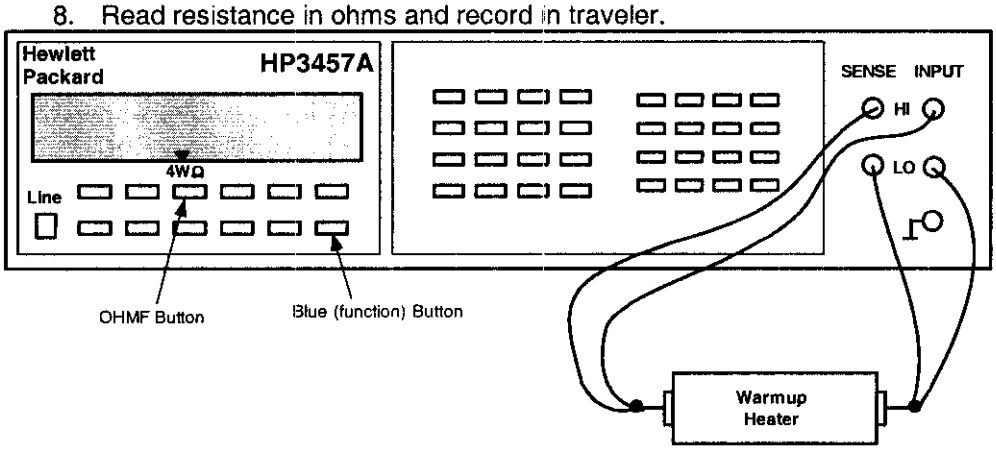

Q2a - RTD's and Cryogenic (warm-up) Heaters			
Temperature of Building (+/- 5°): 70			
Component	**Fermi**	**CERN**	**Resistance**
Q2a RTD, primary	TaQ2a	TT8312	58.447 Ω
Q2a RTD, redundant	TbQ2a	TT8322	60.158 Ω
Q2A Cryogenic (warm-up) Heater (LE) - wire toward cold mass end plate (CERN #1 I+)	W1aQ2A	EH8312+	17.22 Ω
Q2A Cryogenic (warm-up) Heater (LE) - wire toward cold mass mag center (CERN #1 I-)	W2aQ2A	EH8312-	
Q2A Cryogenic (warm-up) Heater (Non-LE) - wire toward cold mass end plate (CERN #2 I+)	W1bQ2A	EH8322+	17.50 Ω
Q2A Cryogenic (warm-up) Heater (Non-LE) - wire toward cold mass mag center (CERN #2 I-)	W2bQ2A	EH8322-	

Technician(s) _____ Date 3/8/04

Q2b - RTD's and Cryogenic (warm-up) Heaters			
Temperature of Building (+/- 5°): 70			
Component	**Fermi**	**CERN**	**Resistance**
Q2b RTD, primary	TaQ2b	TT8332	68.619 Ω
Q2b RTD, redundant	TbQ2b	TT8342	61.705 Ω
Q2B Cryogenic (warm-up) Heater (LE) - wire toward cold mass end plate (CERN #1 I+)	W1aQ2B	EH8332+	17.51 Ω
Q2B Cryogenic (warm-up) Heater (LE) - wire toward cold mass mag center (CERN #1 I-)	W2aQ2B	EH8332-	
Q2B Cryogenic (warm-up) Heater (Non-LE) - wire toward cold mass end plate (CERN #2 I+)	W1bQ2B	EH8342+	16.42 Ω
Q2B Cryogenic (warm-up) Heater (Non-LE) - wire toward cold mass mag center (CERN #2 I-)	W2bQ2B	EH8342-	

Technician(s) _____ Date 3/8/04

Using the Hewlett Packard HP3457A digital multimeter, measure the Strip Heater Resistance for Q2a and Q2b.

Q2a Strip Heater Resistance				
Fermi	CERN	Description	Limit	Resistance
H1aQ2a	YT1112+	Circuit A	18.20 to 21 Ω	18.60 Ω
H2aQ2a	YT1112-			
H1bQ2a	YT1122+	Circuit B	18.20 to 21 Ω	18.45 Ω
H2bQ2a	YT1122-			

Technician(s) _____ Date 3/8/04

Q2b Strip Heater Resistance				
Fermi	CERN	Description	Limit	Resistance
H1aQ2b	YT1132+	Circuit A	18.20 to 21 Ω	19.08 Ω
H2aQ2b	YT1132-			
H1bQ2b	YT1142+	Circuit B	18.20 to 21 Ω	19.12 Ω
H2bQ2b	YT1142-			

Technician(s) _____ Date 3/8/04

1.2 Using the HP3457A, connect power thru the connector Power Leads (HA2 and HB2 to measure Q2-H2 or VA2 and VB2 to measure Q2-V2). Connect the Sense Leads as shown in table below and record resistance.

(Magnet Bus Leads)

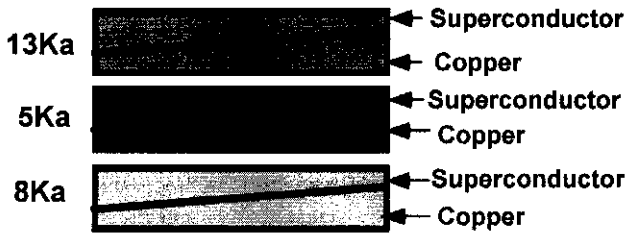

(Corrector Bus Leads)

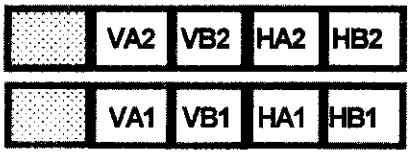

(View Looking into Q2b)

MCBX Corrector Coil Taps			
Component	**FermiLab Label**	**CERN Label**	**Resistance**
Q2-H2	**VTH2**	**EE8122**	2.2304 Ω
	HA2	**N/A**	
Q2-V2	**VTV2**	**EE8112**	2.0596 ~~2.2304~~ Ω
	VA2	**N/A**	

Technician(s) _____ Date 3/8/04

XXX 1.3 Hipot according to table below. Hipot to 5kV. Maximum leakage is 3μA.

Hipot Heaters to Coil and Ground.

High Potential	Grounded	Floating	Leakage
All Strip Heaters	Coils, Yoke, Q1 Instrumentation Bus, Lead and Corrector Coil Busses, RTD's and Warm-up Heaters	Nothing	

Hipot Coil to Heaters and Ground.

High Potential	Grounded	Floating	Leakage
All Coils	Strip Heaters, Yoke, Q1 Instrumentation Bus, 8kA and 5kA Lead Busses and Corrector Coil Busses, RTD's and Warm-up Heaters	Nothing	

Technician(s) N/A _____ Date _____

Responsible Authority/Physicist N/A _____ Date _____

1.4 Check Q1 Instrumentation Bus Wires for Continuity.

Module	Pin	Fermi	CERN	KEK	Description	Done
M2	1	VTa1Q1	EE1111	a1	Q1 Lead Voltage Tap "a", primary	
M2	2	VTa2Q1	EE1121	a2	Q1 Lead Voltage Tap "a", redundant	
M2	3	VTc1Q1	EE1211	c1	Q1 Center Voltage Tap "c", primary	
M2	4	VTc2Q1	EE1221	c2	Q1 Center Voltage Tap "c", redundant	
M2	5	VTb1Q1	EE1311	b1	Q1 Lead Voltage Tap "b", primary	
M3	5	VTb2Q1	EE1321	b2	Q1 Lead Voltage Tap "b", redundant	
M5	1	VTH1	EE8121		Corrector voltage tap Q1-H1 (skew dipole) (on MCBX, MCBXH, A+ lead)	
M5	2	VTV1	EE8111		Corrector voltage tap Q1-V1 (normal dipole) (on MCBX, MCBXV A+ lead)	
M7	1	W1aQ1	EH8311+		Q1 Cryogenic Heater lead end - wire at top (CERN #1 I+)	
M7	2	W2aQ1	EH8311-		Q1 Cryogenic Heater lead end - wire at bottom (CERN #1 I-)	
M7	3	W1bQ1	EH8321+		Q1 Cryogenic Heater non-lead end - wire at top (CERN #2 I+)	
M7	4	W2bQ1	EH8321-		Q1 Cryogenic Heater non-lead end - wire at bottom (CERN #2 I-)	
M9	1	H1aQ1	YT1111+	HA1	Q1 Protection (Strip) Heater, ("a" circuit) (CERN lead #1+)	
M9	3	H2aQ1	YT1111-	HA2	Q1Protection (Strip) Heater, ("a" circuit) (CERN lead #1-)	
M9	5	H1bQ1	YT1121+	HB1	Q1 Protection (Strip) Heater, ("b" circuit) (CERN lead #2+)	
M10	4	H2bQ1	YT1121-	HB2	Q1 Protection (Strip) Heater, ("b" circuit) (CERN lead #2-)	
M12	1	TaQ1_I+	TT8311 I+		Q1 RTD, primary Wire color: Yellow	
M12	2	TaQ1_I-	TT8311 I-		Q1 RTD, primary Wire color: Green	
M12	3	TaQ1_V+	TT8311 U+		Q1 RTD, primary Wire color: Black	
M12	4	TaQ1_V-	TT8311 U-		Q1 RTD, primary Wire color: Red	
M12	5	TbQ1_I+	TT8321 I+		Q1 RTD, primary Wire color: Yellow	
M12	6	TbQ1_I-	TT8321 I-		Q1 RTD, primary Wire color: Green	
M12	11	TbQ1_V+	TT8321 U+		Q1 RTD, primary Wire color: Black	
M12	10	TbQ1_V-	TT8321 U-		Q1 RTD, primary Wire color: Red	

N/A
Technician(s)

Date

10.0 Beam Tube Insertion

10.1 Inspect the Beam Tube (MD-369802) for damage. Clean Beam Tube using lint free Heavy Duty Wipers (Fermi stock 1660-0150) and Isopropyl Alcohol (Fermi stock 1920-0300) as per Insulated Beam Tube Assembly for Q2a/Q2b (MD-369802).

Technician(s) _____ Date 3/16/04

XXX 10.2 Verify Alignment of Q2a, Q2b and Corrector Magnet (MD-390312) as per Q2 Cold Mass Welded Assembly (ME-390309).

Responsible Authority/Physicist N/A Date 3/16/04

10.3 Using Insertion Tooling, insert the Beam Tube (MD-369802) into the Magnet Assembly as per Beam Tube Insertion Tooling (MD-369789).

Technician(s) _____ Date 3/16/04

10.4 Center the Beam Tube (MD-369802) between the Cold Masses by leaving equal amounts of insulated Beam Tube protruding from the End Plates. Measure from the face of the End Plate to the End of the Kapton Wrap on the Beam Tube.

Technician(s) _____ Date 3/16/04

10.5 Measure the Beam Tube length and record this measurement below.

10.5.1 Beam Tube Length: 14298

10.5.2 Subtract 12,610 mm (± 2mm) from the Beam Tube Length, and record here: 1688

10.5.3 Divide the Number recorded in step 10.5.2 by 2 and record here: ~~1344~~ ~~694~~ 844

13455
12610
845 mm
Cut From NWIP

The measurement recorded in step 10.5.3 is the amount to be cut off from each end.

Technician(s) _____ Date 3-18-04

10.6 Measure from one end of the Beam Tube and place a mark at the distance from step 10.5.3.

Technician(s) _____ Date 3-18-04

10.7 Verify the placement of the Mark, measured in Step 10.6 is correct.

Crew Chief _____ Date 3-18-04

10.8 Using the Wachs Cutter, cut the Beam Tube at the Mark from Step 10.6.

Technician(s) _____ Date 3-18-04

10.9 Measure from one end of the Beam Tube and place a mark at the distance from step 10.5.3.

3455

Technician(s) _____ Date 3-18-04

10.10 Verify the placement of the Mark, measured in Step 10.9 is correct. Measuring from the End Plate, this mark should be equal to the 'End Plate to Beam Tube' distance at the other end.

Crew Chief _____ Date 3-18-04

12608mm END LENGTH

10.11 Using the Wachs Cutter, cut the Beam Tube at the Mark from Step 10.9.

Technician(s) _____ Date 3-18-04

TO 5KV

XXX 10.12 Hipot the Beam Tube to coil, heaters and ground. (Max. Leakage < 0.5μA)

Hipot	Leakage or Failure Voltage	Pass	Fail
Beam Tube to coil, heaters and ground	.547 uA	✓	

Technician(s) _____ Date 3/16/04

Responsible Authority/Physicist _____ Date 3/16/04

HIPOT COILS TO EVERYTHING AS PER J. KERBY
5 KV
LEAKAGE
.316

TECH.(S)
D Bice, A Gould

DATE 3/17/04

11.0 Dome Installation

11.1 Reposition the IP End Dome as shown in Q2 Cold Mass Welded Assembly (ME-390309) using the Horizontal Witness Line from step 9.5.

Technician(s) _____ Date 3-19-04

11.2 Feed the Electrical wires/Bus through the proper ports as the IP End Dome (MD-390197) is brought into position against the End Plate.

Technician(s) _____ Date 3-19-04

XXX 11.3 Install Spider Assembly (MC-430044) to protect wires.

Technician(s) N/A _____ Date _____

Responsible Authority/Physicist N/A _____ Date _____

11.4 Tack weld the IP End Dome in place at approximately 6-8 places around the Dome per (ME-390309).

Weldor(s) _____ Date 3/19/04

11.5 Weld the IP End Dome, skip weld around to minimize distortion per (ME-390309).

Weldor(s) _____ Date 3-20-04

11.6 Reposition the Non-IP End Dome as shown in Q2 Cold Mass Welded Assembly (ME-390309) using the Horizontal Witness Line from step 9.11.

Technician(s) _____ Date 3-19-04

11.7 Feed the Electrical wires/Bus through the proper ports as the Non-IP End Dome is brought into position against the End Plate.

Technician(s) _____ Date 3-19-04

11.8 Tack weld the Non-IP End Dome in place at approximately 6-8 places around the Dome as per (ME-390309).

Weldor(s) _____ Date 3-20-04

11.9 Weld the Non-IP End Dome, skip weld around to minimize distortion as per (ME-390309).

Weldor(s) _____ Date 3-20-04

X 11.10 Tack weld the corrector mounting hardware in place as per Q2 Coldmass welded assembly (ME-390309).

Weldor(s) N/A Date

11.11 If needed, perform a stretched wire measurement of the system, noting the relative position and roll of the three magnetic elements to each other.

Performed Stretch Wire Measurement?

Yes ☐ No ☒ (No Signature necessary, if 'No' box is checked)

N/A 99A
Technician(s) Date

11.12 Mount and adjust the Shipping restraint screws.

Note(s):
Weld to corrector if necessary.

N/A
Technician(s) Date

11.13 Weld the Center Body Tube (MC-390112) as per Q2 Cold Mass Welded Assembly (ME-390309).

N/A
Weldor(s) Date

12.0 Cold Bore

12.1 Flare both ends of the Beam Tube using Flaring Tool (MC-390416) per Q2 Cold Mass Welded Assembly (MB-390309).

Technician(s) _____ Date 3-18-07

12.2 Position Cold Bore Flange (MC-390300) over the Beam Tube and onto IP End Dome (Q2a) per Q2 Cold Mass Welded Assembly (MB-390309).

Technician(s) _____ Date 4/14/04

12.3 Weld the Beam Tube to the Flange at IP End as per Q2 Cold Mass Welded Assembly (ME-390309).

Weldor(s) _____ Date 4/14/04

12.4 Add Spacer between Beam Tube Flange and End Dome, if necessary.

Spacer Added? Yes ☒ No ☐

Technician(s) _____ Date 4/14/04

12.5 Position the Cold Bore Flange (MC-390300) over the Beam Tube and onto the Non-IP End Dome (Q2b) per Q2 Cold Mass Welded Assembly (MB-390309).

Technician(s) _____ Date 4/14/04

Busy

12.6 Weld Beam Tube to Flange at NON-IP End as per Q2 Cold Mass Welded Assembly (ME-390309).

Weldor(s) _____ Date 4/14/04

12.7 Align Beam Tube and the Flange at IP End per Q2 Cold Mass Welded Assembly (MB-390309).

Technician(s) _____ Date 4/14/04

12.8 Weld the Flange to the IP End Dome as per Q2 Cold Mass Welded Assembly (ME-390309).

Weldor(s) _____ Date 4-19-04

12.9 Align Beam Tube and Flange at NON-IP End per Q2 Cold Mass Welded Assembly (MB-390309).

Technician(s) _____ Date 4/14/04

12.10 Weld the Flange to the Non-IP End Dome as per Q2 Cold Mass Welded Assembly (ME-390309).

Weldor(s) _____ Date 4-14-04

13.0 Electrical Inspection

13.1 Perform an electrical inspection on each of the Individual Quadrants and the Cold Masses. Refer to the Valhalla and Leader Free Standing Coil Measurement Procedure (ES-292306).

To measure the resistance of a bussed Q2:

1. Use Valhalla Scientific 4300B digital micro-ohmmeter.
2. Set Test Current to 1 amp.
3. Set Scale to 2V full scale.
4. Turn temperature compensation on.
5. Turn test current off.
6. Put jumper between Q2a Q3 inner power lead and 5 KA bus as shown in figure.
7. Connect I_{HI} to the 5KA bus (Q2a Q3 inner power lead) as shown in figure.
8. Connect I_{LO} to the Q2b Q3 inner power lead as shown in figure.
9. Turn test current on.
10. Connect V_{HI} and V_{LO} buttons to voltage taps as shown below.
11. Read resistance and record in traveler.

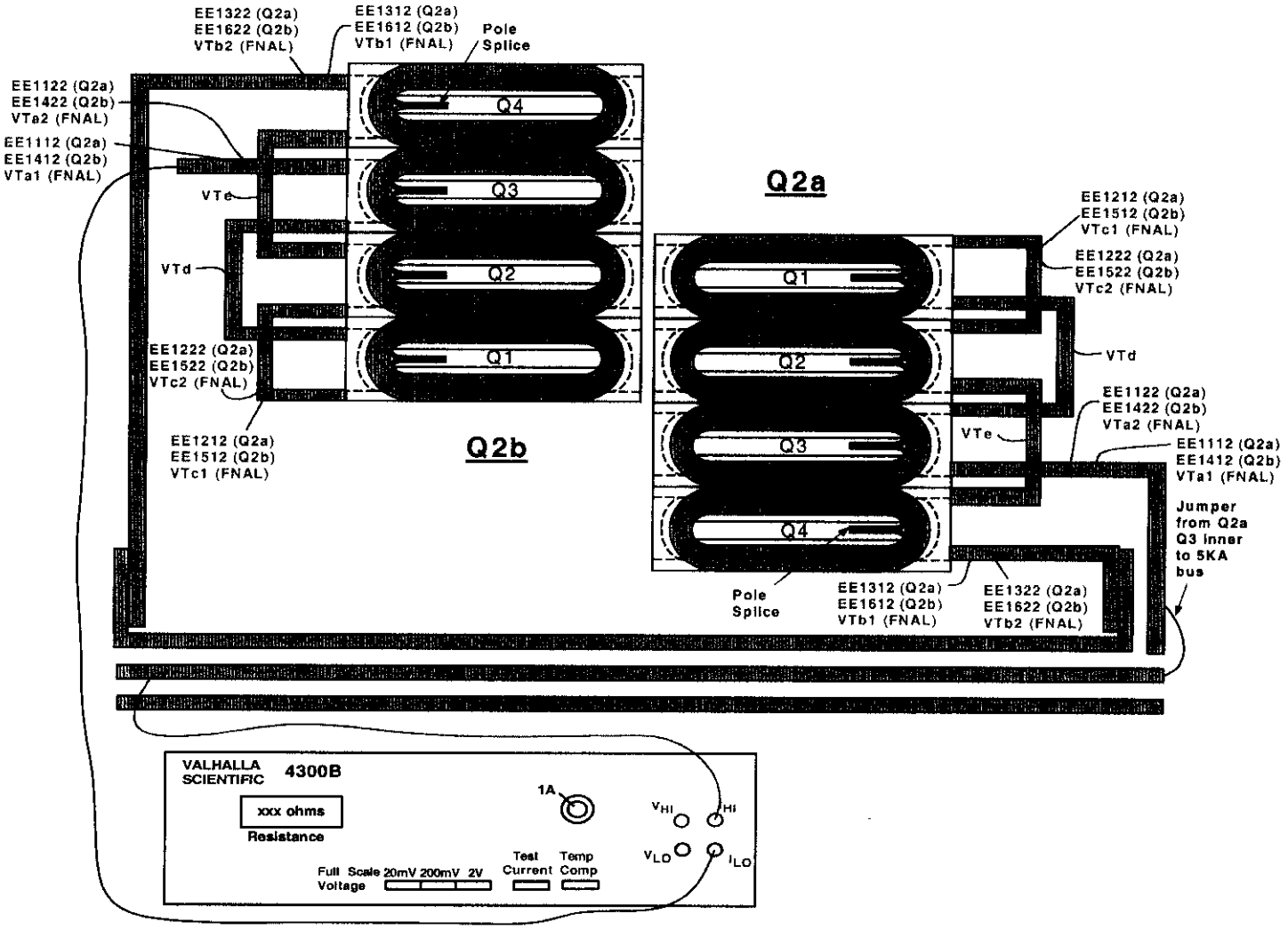

(Q2a) Resistance				Nominal ~ 560 to 585 mΩ
Voltage Tap Serial Numbers				Quadrant Total Resistance
Connect	Fermi	CERN	Quadrant	
V_{HI}	VTdQ2a	EMPTY	Quadrant 1	578.8 mΩ
V_{LO}	VTc1Q2a	EE1212		
V_{HI}	VTc1Q2a	EE1212	Quadrant 2	578.7 mΩ
V_{LO}	VTeQ2a	EMPTY		
V_{HI}	VTa1Q2a	EE1112	Quadrant 3	576.5 mΩ
V_{LO}	VTdQ2a	EMPTY		
V_{HI}	VTeQ2a	EMPTY	Quadrant 4	575.3 mΩ
V_{LO}	VTb1Q2a	EE1312		

V_{HI}	VTa1Q2a	EE1112	Total Cold Mass	Nominal ~ 2.305 Ω
V_{LO}	VTb1Q2a	EE1312		2.310 Ω

Technician(s) 4/19/04 Date

Check resistance of Redundant Voltage Taps.

Q2a Redundant Voltage Taps			
Connect	Fermi	CERN	Resistance
V_{HI}	VTa2Q2a	EE1122	1155.2 mΩ
V_{LO}	VTc2Q2a	EE1222	
V_{HI}	VTc2Q2a	EE1222	1153.6 mΩ
V_{LO}	VTb2Q2a	EE1322	

Technician(s) 4/19/04 Date

To measure Ls and Q of a Bussed Q2:

1. Use Hewlett Packard HP4284A digital LCR meter.
2. Turn line switch to on. The words "Measurement Display" should now be highlighted in the upper left corner of the display screen.
3. Use cursor buttons (shown in figure with arrows) to toggle down until "function" is highlighted near the upper left corner of the display screen.
4. Push the lowest of the five buttons to the right of display 3 times. (this button is shaded gray in the figure) The line in the display screen next to the second button down should now read "Ls-Q" and "function" near the upper left corner of the display should have the option "Ls-Q" chosen.
5. Scroll to "integer" using the cursor buttons. "Integer" will have the option "medium" chosen.
6. Press the 3rd button of five. The word "medium" should change to "long".
7. Connect H_{cur} to the 5KA bus (Q2a/Q3 inner power lead as shown in figure).
8. Connect L_{cur} to Q2b/Q3 inner power lead as shown in figure.
9. Connect H_{pot} and L_{pot} buttons to voltage taps as shown below.
10. Read Ls and Q from display and record in traveler.

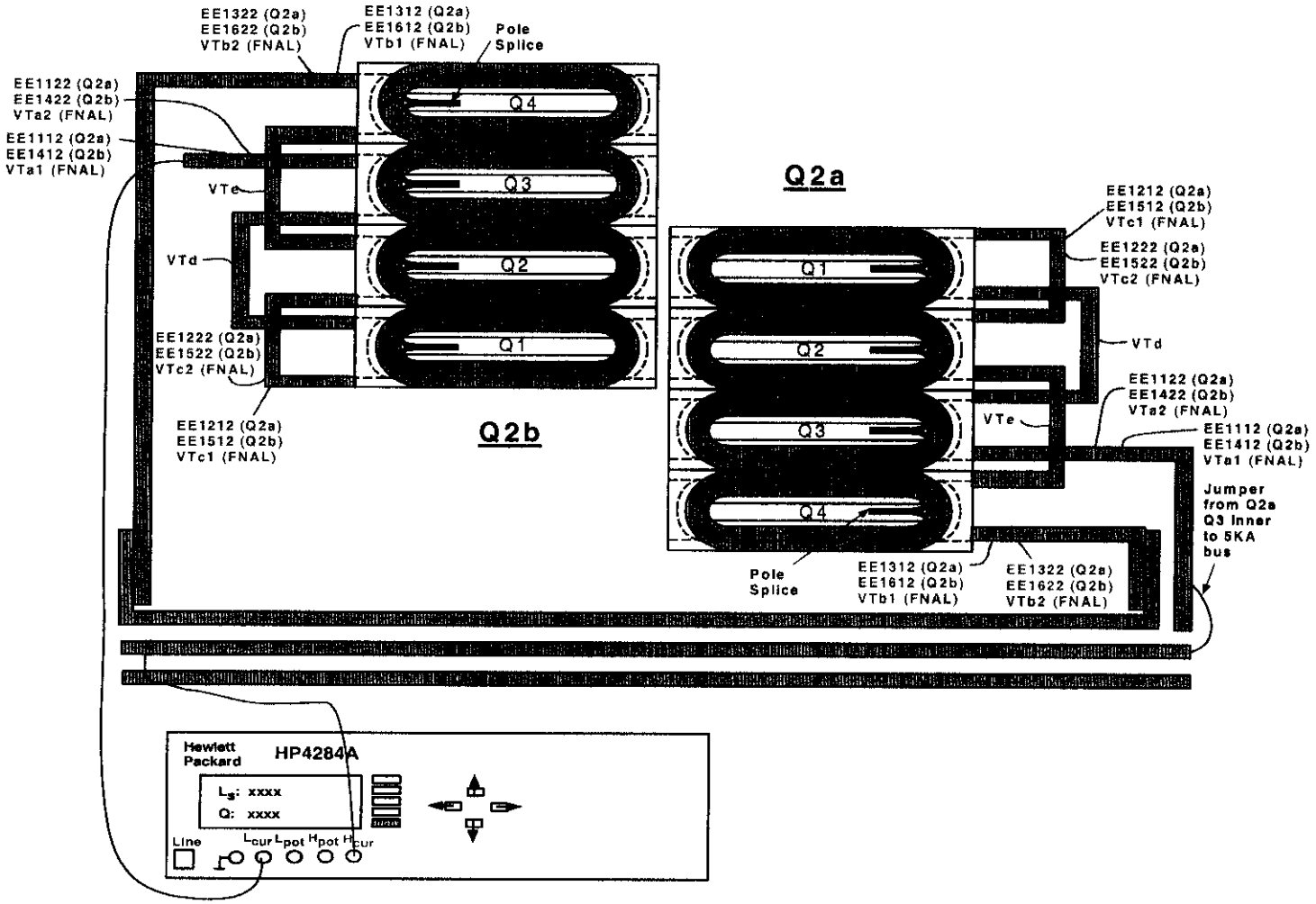

TRR# 1636 CHANGE

(Q2a) Inductance				Nominal ~ 2.880 to 2.935 mH
Voltage Tap Serial Numbers				Quadrant Total Inductance
Connect	Fermi	CERN	Quadrant	
H_{POT}	VTdQ2a	EMPTY	Quadrant 1	3.306 mH
L_{POT}	VTc1Q2a	EE1212		
H_{POT}	VTc1Q2a	EE1212	Quadrant 2	3.2854 mH
L_{POT}	VTeQ2a	EMPTY		
H_{POT}	VTdQ2a	EMPTY	Quadrant 3	3.2542 mH
L_{POT}	VTa1Q2a	EE1112		
H_{POT}	VTeQ2a	EMPTY	Quadrant 4	3.3029 mH
L_{POT}	VTb1Q2a	EE1312		

H_{POT}	VTa1Q2a	EE1112	Total Cold Mass	Nominal ~ 13.3376 mH
L_{POT}	VTb1Q2a	EE1312		13.141 mH

TRR# 1636 CHANGE

(Q2a) Q-Factor				Nominal ~ 4.5 to 5.2
Voltage Tap Serial Numbers				Quadrant Total Q
Connect	Fermi	CERN	Quadrant	
H_{POT}	VTdQ2a	EMPTY	Quadrant 1	3.9
L_{POT}	VTc1Q2a	EE1212		
H_{POT}	VTc1Q2a	EE1212	Quadrant 2	3.9
L_{POT}	VTeQ2a	EMPTY		
H_{POT}	VTa1Q2a	EE1112	Quadrant 3	3.9
L_{POT}	VTdQ2a	EMPTY		
H_{POT}	VTeQ2a	EMPTY	Quadrant 4	3.9
L_{POT}	VTb1Q2a	EE1312		

H_{POT}	VTa1Q2a	EE1112	Total Cold Mass	Nominal ~ 5.036
L_{POT}	VTb1Q2a	EE1312		3.9

Technician(s)

4/19/04
Date

To measure the resistance of a bussed Q2:

1. Use Valhalla Scientific 4300B digital micro-ohmmeter.
2. Set Test Current to 1 amp.
3. Set Scale to 2V full scale.
4. Turn temperature compensation on.
5. Turn test current off.
6. Put jumper between Q2a Q3 inner power lead and 5 KA bus as shown in figure.
7. Connect I_{HI} to the 5KA bus (Q2a Q3 inner power lead) as shown in figure.
8. Connect I_{LO} to the Q2b Q3 inner power lead as shown in figure.
9. Turn test current on.
10. Connect V_{HI} and V_{LO} buttons to voltage taps as shown below.
11. Read resistance and record in traveler.

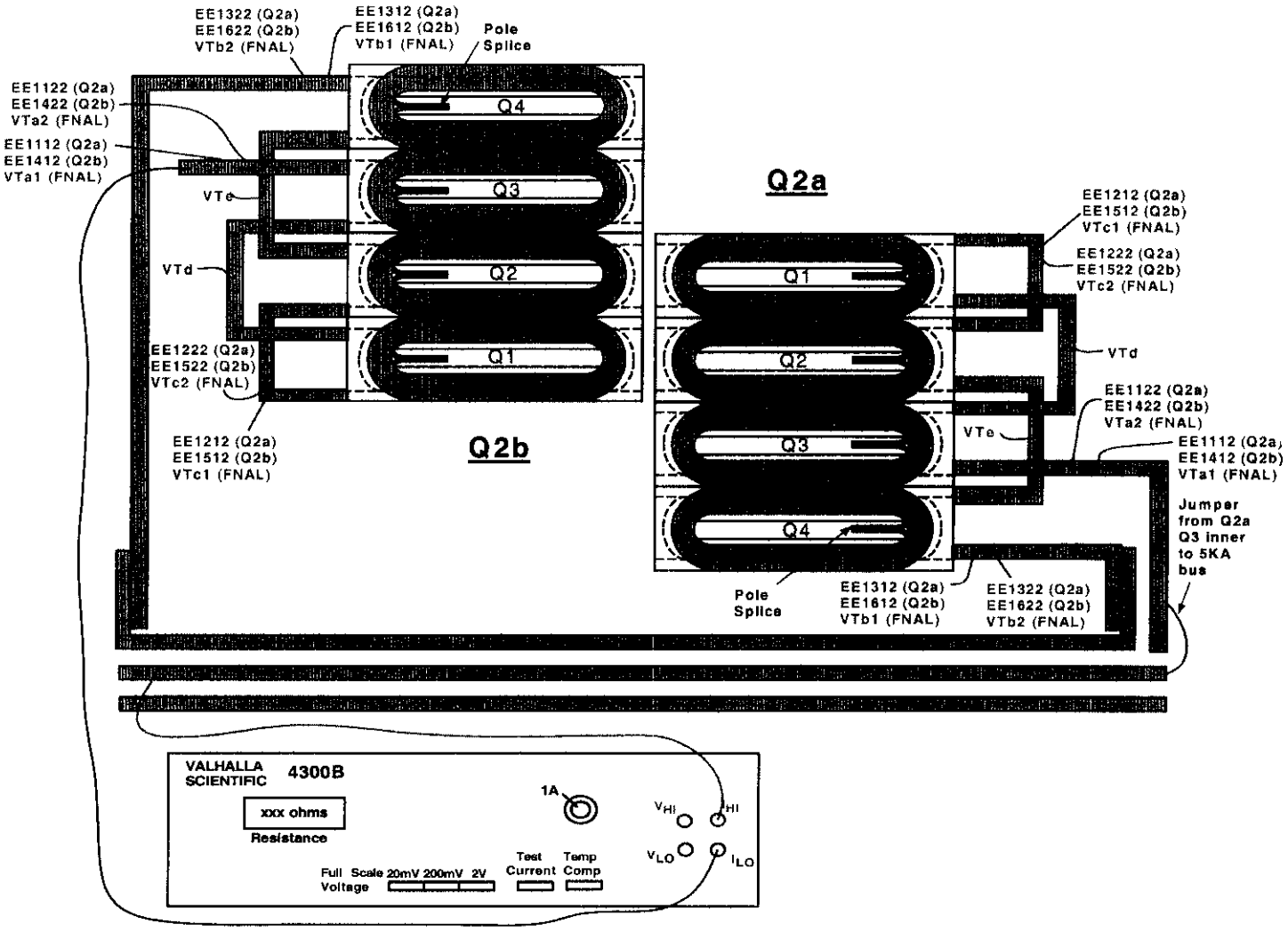

(Q2b) Resistance				Nominal ~ 560 to 585 mΩ
Voltage Tap Serial Numbers				Quadrant Total Resistance
Connect	Fermi	CERN	Quadrant	
V_{HI}	VTc1Q2b	EE1512	Quadrant 1	579.7 mΩ
V_{LO}	VTdQ2b	EMPTY		
V_{HI}	VTeQ2b	EMPTY	Quadrant 2	578.9 mΩ
V_{LO}	VTc1Q2b	EE1512		
V_{HI}	VTdQ2b	EMPTY	Quadrant 3	579.2 mΩ
V_{LO}	VTa1Q2b	EE1412		
V_{HI}	VTb1Q2b	EE1612	Quadrant 4	579.5 mΩ
V_{LO}	VTeQ2b	EMPTY		

V_{HI}	VTb1Q2b	EE1612	Total Cold Mass	Nominal ~ 2.305 Ω
V_{LO}	VTa1Q2b	EE1412		2.318 Ω

Technician(s) _____ Date 4/19/04

Check the resistance of the Redundant Voltage Taps.

Q2b Redundant Voltage Taps			
Connect	Fermi	CERN	Resistance
V_{HI}	VTc2Q2b	EE1522	1158.1 Ω
V_{LO}	VTa2Q2b	EE1422	
V_{HI}	VTb2Q2b	EE1622	1157.8 Ω
V_{LO}	VTc2Q2b	EE1522	

Technician(s) _____ Date 4/19/04

To measure Ls and Q of a Bussed Q2:

1. Use Hewlett Packard HP4284A digital LCR meter.
2. Turn line switch to on. The words "Measurement Display" should now be highlighted in the upper left corner of the display screen.
3. Use cursor buttons (shown in figure with arrows) to toggle down until "function" is highlighted near the upper left corner of the display screen.
4. Push the lowest of the five buttons to the right of display 3 times. (this button is shaded gray in the figure) The line in the display screen next to the second button down should now read "Ls-Q" and "function" near the upper left corner of the display should have the option "Ls-Q" chosen.
5. Scroll to "integer" using the cursor buttons. "Integer" will have the option "medium" chosen.
6. Press the 3rd button of five. The word "medium" should change to "long".
7. Connect H_{cur} to the 5KA bus (Q2a/Q3 inner power lead as shown in figure).
8. Connect L_{cur} to Q2b/Q3 inner power lead as shown in figure.
9. Connect H_{pot} and L_{pot} buttons to voltage taps as shown below.
10. Read Ls and Q from display and record in traveler.

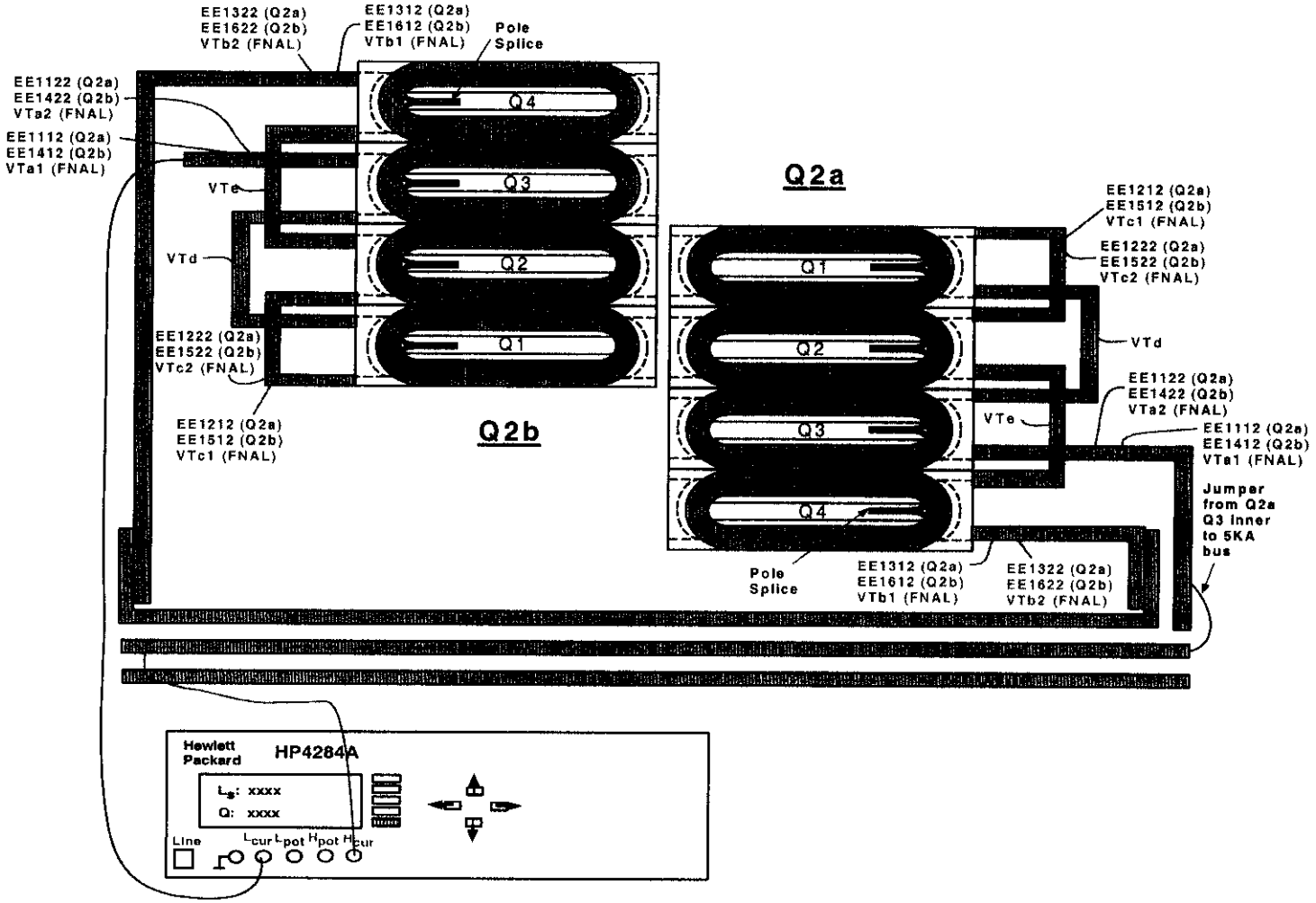

(Q2b) Inductance				Nominal ~ 2.880 to 2.935 mH
Voltage Tap Serial Numbers				Quadrant Total Inductance
Connect	Fermi	CERN	Quadrant	
H_{POT}	VTc1Q2b	EE1512	Quadrant 1	3.2955 mH
L_{POT}	VTdQ2b	EMPTY		
H_{POT}	VTeQ2b	EMPTY	Quadrant 2	3.3036 mH
L_{POT}	VTc1Q2b	EE1512		
H_{POT}	VTdQ2b	EMPTY	Quadrant 3	3.3010 mH
L_{POT}	VTa1Q2b	EE1412		
H_{POT}	VTb1Q2b	EE1612	Quadrant 4	3.2593 mH
L_{POT}	VTeQ2b	EMPTY		

H_{POT}	VTb1Q2b	EE1612	Total Cold Mass	Nominal ~ 13.3376 mH
L_{POT}	VTa1Q2b	EE1412		13.161 mH

(Q2b) Q-Factor				Nominal ~ 4.5 to 5.2
Voltage Tap Serial Numbers				Quadrant Total Q
Connect	Fermi	CERN	Quadrant	
H_{POT}	VTc1Q2b	EE1512	Quadrant 1	3.9
L_{POT}	VTdQ2b	EMPTY		
H_{POT}	VTeQ2b	EMPTY	Quadrant 2	3.9
L_{POT}	VTc1Q2b	EE1512		
H_{POT}	VTdQ2b	EMPTY	Quadrant 3	3.9
L_{POT}	VTa1Q2b	EE1412		
H_{POT}	VTb1Q2b	EE1612	Quadrant 4	4.0
L_{POT}	VTeQ2b	EMPTY		

H_{POT}	VTb1Q2b	EE1612	Total Cold Mass	Nominal ~ 5.036
L_{POT}	VTa1Q2b	EE1412		3.9

A Gould
Technician(s)

4/19/04
Date

To measure the resistance of a Thermometer (RTD):

1. Use Hewlett Packard HP3457A digital multimeter.
2. Record temperature of building within +/- 5 degrees.
3. Press line button to turn line on.
4. Connect wires as shown in Figure below.
   U+ (Black) to Sense HI
   I+ (Yellow) to Input HI
   U- (Red) to Sense LO
   I- (Green) to Input LO
5. Push blue button (function key) once.
6. Push OHMF button.
7. Verify arrow in readout is above the 4WΩ (meaning a 4 wire resistance measurement).
8. Read resistance in ohms and record in traveler.

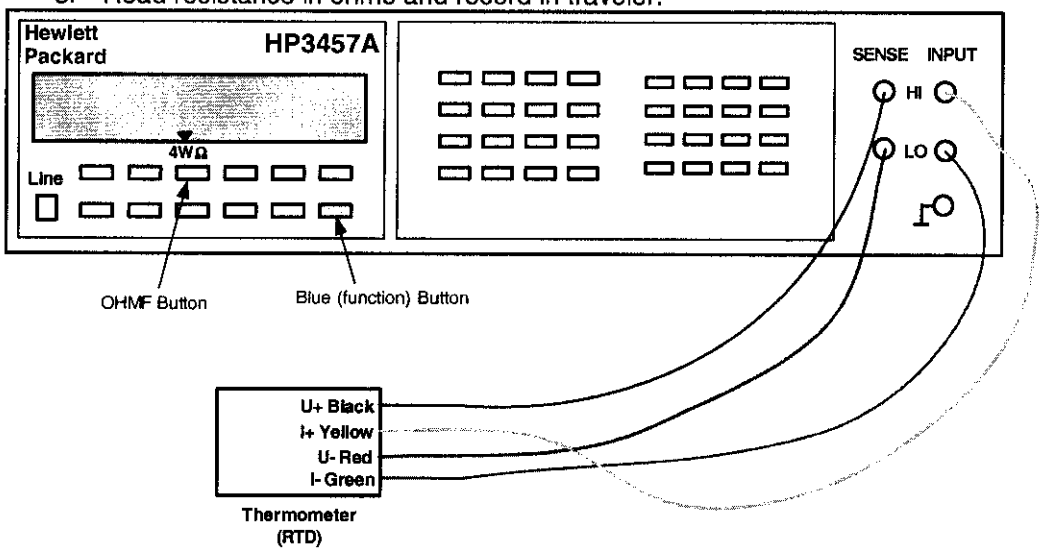

To measure the resistance of a Cryogenic (Warm-up) Heater

1. Use Hewlett Packard HP3457A digital multimeter.
2. Record temperature of building within +/- 5 degrees.
3. Press line button to turn line on.
4. Connect wires as shown in Figure below.
5. Push blue button (function key) once.
6. Push OHMF button.
7. Verify arrow in readout is above the 4WΩ (meaning a 4 wire resistance measurement).
   Note: Although this is technically a 4 wire measurement, it is effectively a 2 wire measurement, since there are only 2 wires connected to each heater.
8. Read resistance in ohms and record in traveler.

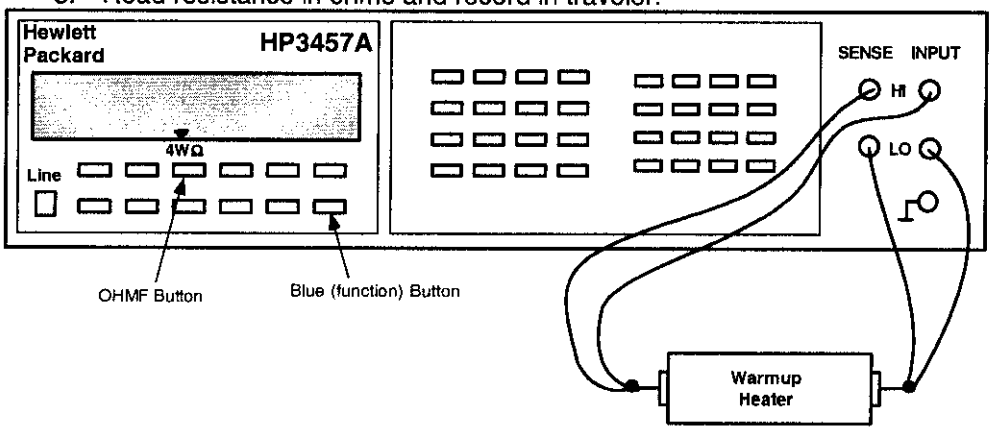

Q2a - RTD's and Cryogenic (warm-up) Heaters			
Temperature of Building (+/- 5°): 72			
Component	**Fermi**	**CERN**	**Resistance**
Q2a RTD, primary	TaQ2a	TT8312	58.02 Ω
Q2a RTD, redundant	TbQ2a	TT8322	59.82 Ω
Q2A Cryogenic (warm-up) Heater (LE) - wire toward cold mass end plate (CERN #1 I+)	W1aQ2A	EH8312+	16.8761 Ω
Q2A Cryogenic (warm-up) Heater (LE) - wire toward cold mass mag center (CERN #1 I-)	W2aQ2A	EH8312-	
Q2A Cryogenic (warm-up) Heater (Non-LE) - wire toward cold mass end plate (CERN #2 I+)	W1bQ2A	EH8322+	16.5425 Ω
Q2A Cryogenic (warm-up) Heater (Non-LE) - wire toward cold mass mag center (CERN #2 I-)	W2bQ2A	EH8322-	

Technician(s) _____ Date 4/19/04

Q2b - RTD's and Cryogenic (warm-up) Heaters			
Temperature of Building (+/- 5°): 72			
Component	**Fermi**	**CERN**	**Resistance**
Q2b RTD, primary	TaQ2b	TT8332	68.23 Ω
Q2b RTD, redundant	TbQ2b	TT8342	61.39 Ω
Q2B Cryogenic (warm-up) Heater (LE) - wire toward cold mass end plate (CERN #1 I+)	W1aQ2B	EH8332+	16.1022 Ω
Q2B Cryogenic (warm-up) Heater (LE) - wire toward cold mass mag center (CERN #1 I-)	W2aQ2B	EH8332-	
Q2B Cryogenic (warm-up) Heater (Non-LE) - wire toward cold mass end plate (CERN #2 I+)	W1bQ2B	EH8342+	16.5022 SWG Ω
Q2B Cryogenic (warm-up) Heater (Non-LE) - wire toward cold mass mag center (CERN #2 I-)	W2bQ2B	EH8342-	

Technician(s) _____ Date 4/19/04

Using the Hewlett Packard HP3457A digital multimeter, measure the Strip Heater Resistance for Q2a and Q2b.

Q2a Strip Heater Resistance				
Fermi	CERN	Description	Limit	Resistance
H1aQ2a	YT1112+	Circuit A	18.20 to 21 Ω	18.83 Ω
H2aQ2a	YT1112-			
H1bQ2a	YT1122+	Circuit B	18.20 to 21 Ω	18.69 Ω
H2bQ2a	YT1122-			

Technician(s) _____ Date 4/19/04

Q2b Strip Heater Resistance				
Fermi	CERN	Description	Limit	Resistance
H1aQ2b	YT1132+	Circuit A	18.20 to 21 Ω	19.38 Ω
H2aQ2b	YT1132-			
H1bQ2b	YT1142+	Circuit B	18.20 to 21 Ω	19.34 Ω
H2bQ2b	YT1142-			

Technician(s) _____ Date 4/19/04

13.2 Using the HP3457A, connect power thru the connector Power Leads (HA2 and HB2 to measure Q2-H2 or VA2 and VB2 to measure Q2-V2). Connect the Sense Leads as shown in table below and record resistance.

(Magnet Bus Leads)

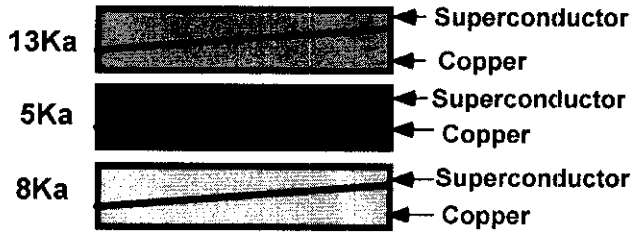

(Corrector Bus Leads)

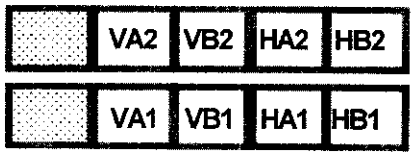

(View Looking into Q2b)

MCBX Corrector Coil Taps			
Component	**FermiLab Label**	**CERN Label**	**Resistance**
Q2-H2	**VTH2**	**EE8122**	.138 Ω
	HA2	**N/A**	
Q2-V2	**VTV2**	**EE8112**	.071 Ω
	VA2	**N/A**	

Technician(s) 4/19/04 Date

XXX 13.3 Hipot according to table below. Hipot to 5kV. Maximum leakage is 3μA.

Hipot Heaters to Coil and Ground.

High Potential	Grounded	Floating	Leakage
All Strip Heaters	Coils, Yoke, Q1 Instrumentation Bus, Lead and Corrector Coil Busses, RTD's and Warm-up Heaters	Nothing	.718 μA

Hipot Coil to Heaters and Ground.

High Potential	Grounded	Floating	Leakage
All Coils	Strip Heaters, Yoke, Q1 Instrumentation Bus, 8kA and 5kA Lead Busses and Corrector Coil Busses, RTD's and Warm-up Heaters	Nothing	.183 μA

Technician(s) 4/19/04 Date

Responsible Authority/Physicist 4-19-04 Date