Document ID: 7828

Q2 LQXB Cryostat Final Assembly Traveler

333644 / Rev. F

Job No:	**248**
E + F Project/Task No.:	**300/1.1.1.6.2**
M + S Project/Task No.:	**300/1.1.1.6.2**

Place This Side Down For Scanning!!!

LQXB06-1

Document ID:

7828

Job No.:

248

Project/Task No.

300/1.1.1.6.2

Series:

LQXB

Serial No:

LQXB06

Rework ID:

1

Specification No.:

333644

Revision:

F

LQXB06-1

Fermi National Accelerator Laboratory
Batavia, IL 60510

LARGE HADRON COLLIDER
Q2-LQXB
CRYOSTAT FINAL ASSEMBLY TRAVELER

Reference Drawing(s):
Vacuum Vessel and Cryostat Assembly
(ME-390206)

Project/Task Number: *300/1.1.1.6.2*

Released By: *John Szostak* | **Magnet/Device Series:** *LQXB*

Date Issued: *4/21/2005 6:04:04 PM* | **Scanned Pages:** 65

Prepared by: J. Szostak

Title	Signature	Date
TD / E&F Process Engineering	*Jamie Blowers* Bob Jensen / Designee	2/28/05
TD / LHC Production Supervisor	*Jim Rife* Jim Rife / Designee	2/28/05
TD / LHC Production Engineer	*Rodger Bossert* Rodger Bossert / Designee	2/28/05
TD / LHC Production Engineer Cryostat	*Tom Page* Tom Page / Designee	2/28/05
TD / LHC Project Engineer Cryostat	*Tom Nicol* Tom Nicol / Designee	2/28/05
TD / LHC Program Manager	*Jim Kerby* Jim Kerby / Designee	2/28/05

Revision Page (1 of 4)

Revision	Step No.	Revision Description	TRR No.	Date
None	N/A	Initial Release	N/A	6/17/02
A	3.1	Removed Step. Not necessary.	1485	10/2/02
	3.2	Modified Step. Changed to "Add Insertion Rails per Vacuum Vessel Assembly (ME-390129)."		
	4.1	Modified Step. Added "Suspension System Adjusting Screw, M16 x 70mm SHCS and Washer" to the Parts table.		
	4.3	Modified step. "Install the Suspension System Adjusting Screws (MB-390039), M16 Screw and washer into the Vacuum Vessel to hold the Fixed Support Assembly in place. Coat all screw heads with Molybdenum disulfide prior to installation."		
	4.6	Modified step. "Install the Suspension System Adjusting Screws (MB-390039), M16 Screw and washer into the Vacuum Vessel to hold the Sliding Support Assemblies in place. Coat all screw heads with Molybdenum disulfide prior to installation."		
	4.11	Modified Step. "Slide the Suspension System over the Cold Mass and place on tooling. The Suspension system may be disassembled during this step. Record shim sizes and locations prior to disassembly." New Step 4.13.		
	5.1	Added Step. "Place the Cold mass assembly on the insertion rail system."		
	5.3	Added Step. "Install Cold mass Insulation per Cold mass Insulation Installation (ME-390302)."		
	5.5	Added Step. "Using Pipe Supports as a template, cut the blankets around the Pipe Support Feet and slit blankets circumferentially at the Pipe Supports."		
	5.6	Added Step. "Remove Pipe Supports and blankets. Wrap blankets in plastic bag to keep clean for later use. Label blankets as they are removed for later positioning."		
	5.7	Added Step. "Install Pipe Supports to same location as in step 5.4."		
	5.16	Added Step. "Weld the Pipe Support Gussets to the Cold mass per Q2 Piping Assembly (ME-390208)."		
	6.0	Modified Steps per Tom Page.		
	7.1	Modified Steps per Tom Page.		
	7.2	Modified Steps per Tom Page.		
	7.3	Modified Steps per Tom Page.		
	7.4	Modified Steps per Tom Page.		
	7.5	Modified Steps per Tom Page.		
B	4.1	Modified Step. Changed to "Label the IP End and the Non-IP End of the Vacuum Vessel with a temporary sticker or equivalent." per Jim Rife.	1539	12/16/04
	5.0	Added Note "**Note(s): Do not use a strap wrench on the pipes.**" per **DR No. HGQ-0394.**		

Revision Page (2 of 4)

Revision	Step No.	Revision Description	TRR No.	Date
C	3.2	Added Step. "Inspect the transition area between the support sections and tube sections. Grind smooth if necessary."	1570	11/18/03
	3.3	Added Step. "Clean the Vacuum Vessel using a vacuum cleaner or equivalent."		
	3.8	Modified Step. Added "Tap out holes with M10 – 1.5 Tap. Move Vessel to Table."		
	4.9	Added Step. "Measure the distance between the Suspension Rings at the bottom of the Threaded Rods. Install Threaded Rods after measurements."		
	4.10	Modified Step. Moved "Configure the Suspension Tooling for Q2 Assembly per (ME-364604). Place Suspension Assembly on the tooling and make necessary adjusts to the tooling." to New step 4.11.		
	4.16	Modified Step. Added "Install shims between the Brass Slide Bars and the Stainless Steel Blocks on each support as needed. Record Shim size and location below." New Step 4.17.		
	5.0	Modified, rearranged and added steps from step 5.13 to 5.35, per Notes taken by Steve Gould and Tom Page on LQXB02.		
	5.8	Added Step. "Install Q2 Installation Tie Rod Assembly (MC-390635) and Tie Bar Retaining Clamp (MB-390136) as per Q2 Cryostat Assembly - Internal Piping (ME-390208)." per traveler LQXB03-0.		
	5.18	Modified Step. Changed Quantity from 2 ea to 4 ea. "...Pumping Line Pipe Stop (MB-390149), (4 ea.) and Cool Down Line Pipe Stop (MB-390150) (4 ea.)."		
	5.19	Modified Step. Changed Quantity from 2 ea to 4 ea. "...Pumping Line Pipe Stop (MB-390149), (4 ea.) and Cool Down Line Pipe Stop (MB-390150) (4 ea.)."		
	5.20	Modified Step. Changed Technician Signoff to Weldor Signoff.		
	5.21	Modified Step. Changed to "Clean the following parts fromQ2 Heat Exchanger Corrugated Tube Assembly (ME-390143)." Added Table. New step 5.35.		
	5.22	Modified Step. Moved to after Suspension System Adjusting Screws are installed. New Step 7.7		
	5.23	Modified Step. Moved to after Suspension System Adjusting Screws are installed. New Step 7.8		
	6.1	Moved Step. Moved to New Step 6.2. "Install the Cold mass MLI Blankets per (ME-390302) and in the same position as Step 5.6." Cannot Lift Cold Mass with Blankets installed.		
	6.2	Moved Step. Moved to New Step 6.1. "Lift the Cold Mass Assembly and place the Center Section (ME-390164) and End Sections (ME-390162) on the Insertion Rails. Lower the Cold mass back onto the rails ensuring the holes in the Shield Sections line up with Support Rollers."		
	7.8	Removed Step. " Install the Conflat flanges with copper gaskets on the Vacuum Vessel as per the General Assembly (ME-390000)." Conflat Flanges installed in IB#1.		

Revision Page (3 of 4)

Revision	Step No.	Revision Description	TRR No.	Date
D	Cover Page	Modified. Added signoff for Rodger Bossert for Final Electrical Steps in traveler.	1586	2/2/04
	3.1	Added Step. "Record the Vacuum Vessel Serial Number." per Jim Rife.		
	4.9	Modified Step. Moved to after Leak Checks. (New Step 5.34)		
	4.11	Modified Step. Changed ½" to 2" per Steve Gould.		
	5.8	Added Step. "Install Q2 Installation Tie Rod Assembly (MC-390635) and Tie Bar Retaining Clamp (MB-390136) as per Q2 Cryostat Assembly - Internal Piping (ME-390208)."		
	5.15	Modified Step. Changed to Technician Signoff.		
	5.21	Removed Step. "Re-install the Threaded Rods and lock into place." per TR-333644, LQXB04.		
	5.22	Removed Step. "Perform a Stretched Wire Measurement." per TR-333644, LQXB04.		
	5.23	Removed Step. "Insert the Q2 Pumping Line Tube (MB-390147) and Q2 Cool Down Line Tube (MB-390146)." Completed in step 5.10.		
	5.24	Removed Step. "Weld Pumping Line End Flange (MA-390032) to the Q2 Pumping Line Tube (MB-390147)." Completed in step 5.12.		
	5.25	Removed Step. "Weld Cool Down Line End Flange (MA-390033) to the Q2 Cool Down Line Tube (MB-390146)." Completed in step 5.12.		
	6.9	Modified Step. Added "Tap the PEM nuts prior to installing shield. Use care in tightening screws so they don't break." per DR No. **HGQ-0441**.		
	7.6	Modified Step. Added Note. "**Note(s): Ensure proper lubrication on adjusting screws. Check threads on screw and vacuum vessel prior to assembly and fix if necessary.**"		
	8.0	Added Step. Added Final Electrical Inspection per Jim Rife.		
E	1.4	Removed Step. "All personnel performing steps in this traveler must have documented training for this traveler and associated operating procedures."	1639	12/17/04
	3.2	Removed Step. "Add Insertion Rails per Vacuum Vessel Assembly (ME-390129)." Insertion rails no longer used.		
	5.14	Moved Step. "Weld the Retainer Clips (MA-390103) to the Cold Mass Outer Shell as per the Pipe Support Assembly (ME-390087) or (ME-390208)." New step 5.8 per Tom Page & Steve Gould.		
	5.29	Removed Step. "Measure the distance between the Suspension Rings at the bottom of the Threaded Rods. Install Threaded Rods (MC-390635 and MA-393227) after measurements." per Tom Page. Steps completed previously.		
	5.30	Removed Step. "Install bottom of shield (ME-390162, Qty 2) (ME-390163, Qty 2) (ME-390164)." per Tom Page.		
	5.31	Removed Step. "Install Center Retainers (MA-390086) before installing Support Bands (ME-390083). Install Aluminum Spacers (MA-390373) and screws to the End Sections before attaching the Support Bands." per Tom Page.		
	6.1	Added Step. "Tap the PEM nuts prior to installing shield. Use care in tightening screws so they don't break." Per Tom Page.		
	6.8	Modified Step. Added "The center blanket may need to be rotated 90 degrees. Tape the seams instead of using the Velcro, if necessary." **DR No. HGQ-0466.**		
	6.9	Modified Step. Moved "Tap the PEM nuts prior to installing shield. Use care in tightening screws so they don't break." to new step 6.1.		
	6.10	Modified Step. Moved to after step 5.20 per Steve Gould.		
	7.1	Modified Step. Changed "Green Putty" to "Pig Putty" per LQXB07.		
	8.0	Modified Step. Added new method of measuring Ls &Q per Rodger Bossert.		
	9.0	Added Step. "Final Preparations"		

Revision Page (4 of 4)

Revision	Step No.	Revision Description	TRR No.	Date
F	1.6	Added Step. "Protect the bellows during all stages of production." **DR No. HGQ-0500.**	1709	2/28/05
	3.4	Modified Step. Changed to "Attach Leak Check sticker for the Vacuum Vessel Assembly (ME-390003) per ES-107240." Per LQXB08.		
	4.15	Added Step. "If needed, perform a stretched wire measurement of the system, noting the relative position and roll of the three magnetic elements to each other. Perform Stretched Wire Measurement?" per LQXB08.		
	5.6	Added Step. "Starting from the North Side of IP (or East) End of Magnet, mark the East End of the 1st blanket "1E" (1 East) and "1W" (1 West) as per Figure 5.6-A below. Label the next blanket in this fashion, incrementing the numerical value for each blanket as per Figure 5.6-A. When all blankets are installed on Cold Mass, blanket designations should be placed near the "Top" of the North side of the magnet as per Figure 5.6-A." Per production request.		
	5.7	Modified Step. Removed "Label blankets as they are removed for later positioning." Per new Step 5.6.		
	5.22	Modified Step. Moved Step to before Step 5.21 (Pressure testing the Cold Mass) per LQXB08.		
	5.23	Modified Step. Moved Step to before Step 5.21 (Pressure testing the Cold Mass) per LQXB08.		
	5.24	Modified Step. Moved Step to before Step 5.21 (Pressure testing the Cold Mass) per LQXB08.		
	5.25	Added Step. "Install the Fiducial Mounting Blocks (MB-390809) per Q2 Cold Mass Welded Assembly (ME-390309)." per LHC Production Engineer.		
	5.26	Added Step. "Weld the Fiducial Mounting Blocks (MB-390809) per Q2 Cold Mass Welded Assembly (ME-390309)." per LHC Production Engineer.		
	5.27	Added Step. "Prepare Cold Mass Assembly for Pressure Test at 375 psi." per LHC Production Engineer.		
	5.28	Added Step. "Verify Cold Mass Assembly is ready for Pressure Test at 375 psi." per LHC Production Engineer.		
	5.30	Modified Step. Moved to before Assembling the Corrugated Tube Assembly. Per LQXB08. (New Step 7.7).		
	8.1	Modified Step. Reversed H_{pot} and L_{pot} Voltage Taps for Inductance and Q-factor, in table, to allow for correct values taken at Q2a end of Magnet. Per LQXB08.		
	9.4	Removed Step. "Install the Vinyl Flange Covers (MA-390491), (MA-390492), (MA-390493), (MA-390494), & the Alignment Fiducial Covers (MA-390495)." Moved to Shipping Traveler.		

Ensure appropriate memos and specific instructions are placed with the traveler before issuing the sub traveler binder to production.

1.0 General Notes

1.1 All steps that require a sign-off shall include the Technician/Inspectors first initial and full last name.

1.2 No erasures or white out will be permitted to any documentation. All incorrectly entered data shall be corrected by placing a single line through the error, initial and date the error before adding the correct data.

1.3 All Discrepancy Reports issued shall be recorded in the left margin next to the applicable step.

1.4 Personnel shall perform all tasks in accordance with current applicable ES&H guidelines and those specified within the step.

1.5 Cover the product/assembly with Green Herculite (Fermi stock 1740-0100) when not being serviced or assembled.

1.6 Protect the Bellows during all stages of production.

2.0 Parts Kit List

2.1 Attach the completed Parts Kit for this production operation to this traveler. Ensure that the serial number on the Parts Kit matches the serial number of this traveler. Verify that the Parts Kit received is complete.

J. Gostat
Process Engineering/Designee

8/18/05
Date

3.0 Vacuum Vessel Preparation and Painting

3.1 Record the Vacuum Vessel Serial Number.

Q2-8

Technician(s) Date 8/17/05

3.2 Inspect the transition area between the support sections and tube sections. Grind smooth if necessary.

Technician(s) Date 8/17/05

3.3 Clean the Vacuum Vessel using a vacuum cleaner or equivalent.

N/A

Technician(s) Date

3.4 Attach Leak Check sticker for the Vacuum Vessel Assembly (ME-390003) per ES-107240.

Part No.	DETERMINATION OF DETECTABLE LEAK						
	M.D.S. ÷ ((Response – Background) ÷ Leak value) = MDL						
OPERATOR'S LAST NAME	SCALE UNITS BEFORE HELIUM PROBE	SCALE UNITS WHILE ENCLOSURE FLOODING	MDS	Response	Background	Leak Value	MDL
						____ x E $^{-8}$	____ x E $^{-}$ ___

N/A

Technician(s) Date

3.5 Prepare the outside of the Vacuum Vessel (ME-390003) for painting by cleaning with Ethyl Alcohol (Fermi stock 1920-0550) and Kimwipes (Fermi stock 1660-2500) or equivalent.

N/A

Technician(s) Date

3.6 Mask the Stainless Steel Components of the Vacuum Vessel for painting.

N/A

Technician(s) Date

3.7 Prime the Vacuum Vessel using Rust-o-leum (Fermi stock 1825-4000).

N/A
Technician(s) Date

3.8 Verify that the Screws (MA-393036) will thread easily into the appropriate holes in the Vacuum Vessel (ME-390126). If necessary, tap out holes with M10 – 1.5 Tap. Move Vessel to Table.

N/A
Lead Person Date

3.9 Paint the Vacuum Vessel using Flambeau Red (Fermi stock 1825-3710).

Vacuum Vessel
(ME-390129)

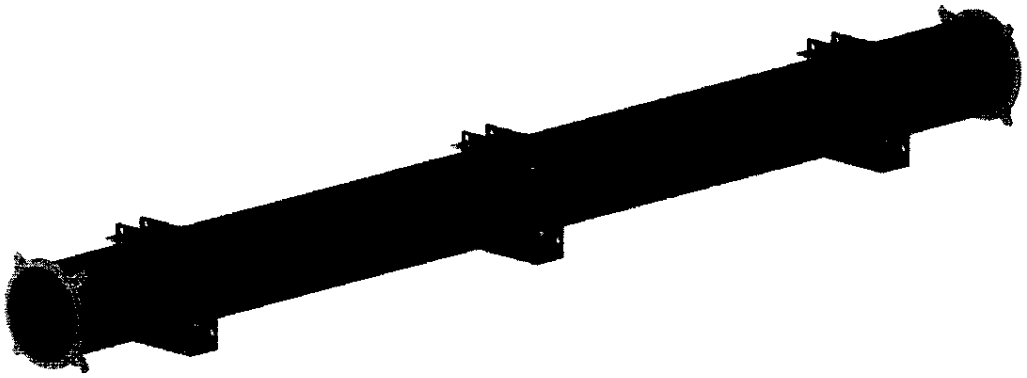

N/A
Technician(s) Date

4.0 Suspension System

4.1 Clean the Suspension System with Ethyl Alcohol (Fermi stock 1920-0550) and Kimwipes (Fermi stock 1660-2500) or equivalent.

Part Name	Part Number	Quantity	Completed
Fixed Support Assembly	**(ME-390041)**	**1**	✓
Sliding Support Assembly	**(ME-390042)**	**2**	✓
Tie Bar Assembly	**(ME-390167)**	**4**	✓
Tie Bar Shim, .250"	**(ME-390118)**	**6**	✓
Tie Bar Shim, .093"	**(ME-390119)**	**6**	✓
Tie Bar Shim, .031"	**(ME-390120)**	**6**	✓
Suspension System Adjusting Screw	**(MB-390039)**	**12**	✓
M16 x 70mm SHCS	**(MA-393021)**	**12**	✓
Washer	**(MA-390377)**	**12**	✓

Label the IP End and the Non-IP End of the Vacuum Vessel with a temporary sticker or equivalent.

N/A
Technician(s) Date

4.2 Insert the Fixed Support Assembly (ME-390041) into the vacuum vessel and position at the center support.

N/A
Technician(s) Date

4.3 Install the Suspension System Adjusting Screws (MB-390039), M16 Screw and washer into the Vacuum Vessel to hold the Fixed Support Assembly in place. Coat all screw threads with Molybdenum disulfide prior to installation.

[redacted]

N/A
Technician(s) Date

4.4 Adjust the Vertical and rotational alignment of the Supports using the Suspension System Adjusting Screws (MB-390039). Ensure all four screws are in contact with the Support and that Diametrically Opposing Support Lugs are equidistant from the Vacuum Vessel Wall.

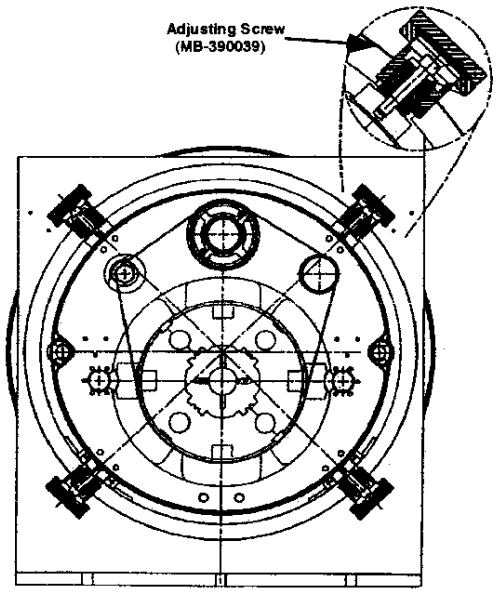

N/A
Technician(s) Date

4.5 Insert the Sliding Support Assemblies (ME-390042) in to the Vacuum Vessel and position at each of the outboard support sections.

N/A

Technician(s) Date

4.6 Install the Suspension System Adjusting Screws (MB-390039), M16 Screw and washer into the Vacuum Vessel to hold the Fixed Support Assembly in place. Coat all screw threads with Molybdenum disulfide prior to installation.

[redacted]

N/A

Technician(s) Date

4.7 Adjust the Vertical and rotational alignment of the Supports using the Suspension System Adjusting Screws (MB-390039). Ensure all four screws are in contact with the Support and that Diametrically Opposing Support Lugs are equidistant from the Vacuum Vessel Wall.

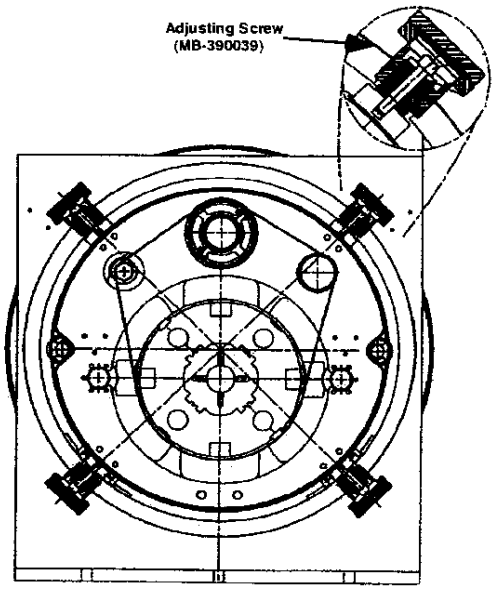

N/A

Technician(s) Date

4.8 Assemble the Suspension System using the Fixed Support Assembly (ME-390041), the Sliding Support Assemblies (ME-390042) and the Tie Bar Assemblies (MC-390167). Insert Tie Bar Shims (MC-390118),(MB-390119) and (MB-390120) between the Sliding Support Assemblies (ME-390042) and the Tie Bar Assemblies (MC-390167) as required. (Reference drawing: ME-390310)

N/A
Technician(s) _____ Date _____

4.9 Label the IP End Support and the Non-IP End Support. (Writing on the G-11 Support is acceptable).

N/A
Technician(s) _____ Date _____

4.10 Loosen each Suspension System Adjusting Screw (MB-390039) 2 turns and remove the Suspension System from the Vacuum Vessel.

N/A
Technician(s) _____ Date _____

4.11 Configure the Suspension Tooling for Q2 Assembly per (ME-364604). Place Suspension Assembly on the tooling and make necessary adjusts to the tooling.

N/A
Technician(s) _____ Date _____

4.12 Assemble the Outboard Suspension Mounting Brackets (MD-390280) to the Sliding Support Assemblies (outboard supports, ME-390042).

N/A
Technician(s) _____ Date _____

4.13 Assemble the Center Suspension Mounting Brackets (MD-390281) to the Sliding Fixed Assemblies (center support, ME-390041).

[illegible]
Technician(s) _____ Date 8/2/05

4.14 Slide the Suspension System over the Cold Mass and place on tooling. The Suspension system may be disassembled during this step. Record shim sizes and locations prior to disassembly.

Note(s):

Ensure that the Suspension System is configured properly to the Cold Mass with respect to the IP and Non-IP Ends.

Technician(s) _____ Date 8/2/05

4.15 If needed, perform a stretched wire measurement of the system, noting the relative position and roll of the three magnetic elements to each other.

Perform Stretched Wire Measurement?

Yes ☑

No ☐

_____

_____

_____

_____

_____

5 Min

Responsible Authority/Physicist _____ Date 8/8/05

4.16 Verify locking collars exist only at center support.

Lead Person _____ Date 8/3/05

4.17 Establish alignment between the Cold Mass and the Support system. Install shims between the Brass Slide Bars and the Stainless Steel Blocks on each support as needed.

Record Shim size and location below.

East-North —	**East-South** —
Center-North .054	**Center-South** .054
West-North —	**West-South** —

Technician(s) _____ Date 8-3-05

4.18 Verify the Alignment of the Cold Mass and the Support System.

Crew Chief _____ Date 8/3/05

4.19 Weld the Cold Mass to the Outboard Cold Mass Brackets as per (ME-390310).

Weldor(s) _____ Date 8-3-05

5.0 Piping Assembly

Note(s):

Do not use a Strap Wrench on the Pipes.

5.1 Place the Cold Mass Assembly on the insertion rail system.

Technician(s) _____ Date 8-12-05

5.2 Clean the Pipe Supports with Ethyl Alcohol (Fermi stock 1920-0550) and Kimwipes (Fermi stock 1660-2500) or equivalent.

Technician(s) _____ Date 8-12-05

5.3 Install Cold mass Insulation per Cold mass Insulation Installation (ME-390302).

Technician(s) _____ Date 8-12-05

5.4 Install the Pipe Supports (MD-390258)(Qty. 4) on the Cold Mass per (ME-390208).

Note(s):

A Tie Bar may be disconnected, if necessary, from the Fixed Support Assembly to install the central two pipe supports.

PIPE SUPPORT ASSEMBLY

Technician(s) _____ Date 8-12-05

5.5 Using Pipe Supports as a template, cut the blankets around the Pipe Support Feet and slit blankets circumferentially at the Pipe Supports.

N/A

Technician(s) Date

5.6 Starting from the North Side of IP (or East) End of Magnet, mark the East End of the 1st blanket "1E" (1 East) and "1W" (1 West) as per Figure 5.6-A below. Label the next blanket in this fashion, incrementing the numerical value for each blanket as per Figure 5.6-A. When all blankets are installed on Cold Mass, blanket designations should be placed near the "Top" of the North side of the magnet as per Figure 5.6-A.

INSTALLING BLANKETS

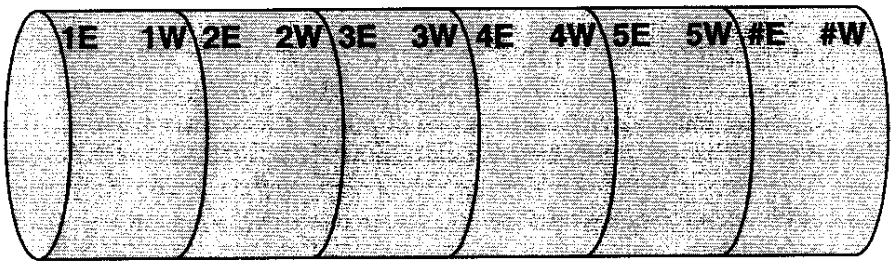

IP END **NON-IP END**

(View from "North" End of Magnet looking "South")

Figure 5.6-A

N/A

Technician(s) Date

5.7 Remove Pipe Supports and blankets. Wrap blankets in plastic bag to keep clean for later use.

N/A

Technician(s) Date

5.8 Install Pipe Supports to same location as in step 5.4.

N/A

Technician(s) Date

5.8 Weld the Retainer Clips (MA-390103) to the Cold Mass Outer Shell as per the Pipe Support Assembly (ME-390087) or (ME-390208).

N/A

Weldor(s) Date

X 5.9 Install Q2 Installation Tie Rod Assembly (MC-390635) and Tie Bar Retaining Clamp (MB-390136) as per Q2 Cryostat Assembly - Internal Piping (ME-390208).

Don Kurczyk 8/22/05

Technician(s) Date

5.10 Clean the Q2 Heat Exchanger Outer Shell (MD-390145), Q2 Pumping Line Tube (MB-390147) and the Q2 Cool Down Line Tube (MB-390146) with Ethyl Alcohol (Fermi stock 1920-0550) and Kimwipes (Fermi stock 1660-2500) or equivalent.

Technician(s) _____ Date 8/22/05

DR B4283

5.11 Slide the Q2 Heat Exchanger Outer Shell (MD-390145), Q2 Pumping Line Tube (MB-390147) and the Q2 Cool Down Line Tube (MB-390146) through all seven supports.

Note(s):

Ensure the cross over hole in the Heat Exchanger Pipe is lined up with the hole in the Cold Mass Center Tube.

Technician(s) _____ Date 8-22-05

5.12 Clean the Pumping Line Flanges (MB-390032), the Cool Down Line Flanges (MB-390033) and the Heat Exchanger Outer Shell Flanges (MB-390031) with Ethyl Alcohol (Fermi stock 1920-0550) and Kimwipes (Fermi stock 1660-2500) or equivalent.

Technician(s) _____ Date 8-22-05

5.13 Weld the Heat Exchanger Outer Shell Flanges (MB-390031), the Pumping Line Flanges (MB-390032) and the Cool Down Line Flanges (MB-390033) to the ends of the corresponding pipes.

Weldor(s) _____ Date 8/22/05

5.14 Clean the Cold Mass and the Retainer Clips (MA-390103) with Ethyl Alcohol (Fermi stock 1920-0550) and Kimwipes (Fermi stock 1660-2500) or equivalent.

Technician(s) N/A Date _____

5.15 Clean the Pipe Support Gussets with Ethyl Alcohol (Fermi stock 1920-0550) and Kimwipes (Fermi stock 1660-2500) or equivalent.

Technician(s) N/A Date _____

5.16 Weld the Pipe Support Gussets to the Cold mass per Q2 Piping Assembly (ME-390208).

Weldor(s) N/A Date _____

5.17 Clean the Heat Exchanger Connection (MC-390111) with Ethyl Alcohol (Fermi stock 1920-0550) and Kimwipes (Fermi stock 1660-2500) or equivalent.

Technician(s) _____ Date 8-22-05

5.18 Install the Connector (Heat Exchanger to Cold Mass) (MC-390111). Verify alignment and then purge Cold Mass and Q2 Heat Exchanger Outer Shell (MD-390145), with Argon Gas.

Technician(s) _____ Date 8-23-05

5.19 Weld the Connector (Heat Exchanger to Cold Mass) (MC-390111) to the Q2 Heat Exchanger Outer Shell (MD-390145) and to the Cold Mass Center Tube per (ME-390208, Section F-F).

Weldor(s) _____ Date 8/23/05

5.20 Insert 4.5k Intercept Line Pipes per (ME-390208).

Technician(s) _____ Date 8/25/05

5.21 Install the Tie Bar Retaining Clamps (Qty. 8)(MB-390136) per Q2 Internal Piping Assembly (ME-390208).

Technician(s) _____ Date 8-25-05

5.22 Clean the Pumping Line Pipe Stop (MB-390149), (4 ea.) and the Cool Down Line Pipe Stop (MB-390150) (4 ea.) with Ethyl Alcohol (Fermi stock 1920-0550) and Kimwipes (Fermi stock 1660-2500) or equivalent.

Technician(s) _____ Date 8-23-05

5.23 Weld the Pumping Line Pipe Stop (MB-390149), (4 ea.) and Cool Down Line Pipe Stop (MB-390150) (4 ea.) on the Pumping Line and Cool Down Lines.

Weldor(s) _____ Date 8/23/05

5.24 Weld the fixed collar to the 4.5k Intercept Line Tube (MB-390204) per (ME-390208).

Weldor(s) _____ Date 8/25/05

5.25 Install the Fiducial Mounting Blocks (MB-390809) per Q2 Cold Mass Welded Assembly (ME-390309).

Technician(s) _____ Date 8-24-05

5.26 Weld the Fiducial Mounting Blocks (MB-390809) per Q2 Cold Mass Welded Assembly (ME-390309).

Weldor(s) _____ Date 8/24/05

5.27 Prepare Cold Mass Assembly for Pressure Test at 375 psi.

E. Strupik — Technician(s)

8-24-05 — Date

STOP

5.28 Verify Cold Mass Assembly is ready for Pressure Test at 375 psi.

T. Peer — Responsible Authority/Physicist

8/24/05 — Date

5.29 Pressure test the Cold Mass Assembly at 375 psi Nitrogen per Section 5034 of the Fermilab ES&H Manual and UG-100 of the Code.

Warning:

The test is to be performed after normal working hours and only personnel directly involved with the test will be present.

STOP

T. Peer — Responsible Authority/Physicist

8/29/05 — Date

5.30 Leak Check the Cold Mass Assembly. (This will include the Exchanger Outer Shell).

Part No.		DETERMINATION OF DETECTABLE LEAK						
PART NO. LQXB06-1		SCALE UNITS BEFORE HELIUM PROBE	SCALE UNITS WHILE ENCLOSURE FLOODING	DETERMINATION OF MINIMUM DETECTABLE LEAK				
DATE TIME	OPERATOR'S LAST NAME			MDS ÷ ((Response - Bckgnd) ÷ Leak Value) = MDL				
9-9-05	D. GAW	34X5	34X5	10	38X5	34X5	2.85×10^{-8}	1.4×10^{-8}
10:10HRS	JARRIE WILSON							

D. Gaw — Inspector

9/9/05 — Date

5.31 Leak Check the Cool Down Line (MB-390146).

Part No. cool Down line tube	DETERMINATION OF DETECTABLE LEAK						
	M.D.S. ÷ ((Response – Background) ÷ Leak value) = MDL						
OPERATOR'S LAST NAME	SCALE UNITS BEFORE HELIUM PROBE	SCALE UNITS WHILE ENCLOSURE FLOODING	MDS	Response	Background	Leak Value	MDL
Wilson	20X1	20X1	2	55X5	20X1	3.91 xE-8	3.06 xE-10

Inspector [signature] 8-26-05 Date

5.32 Leak Check the Q2 Pumping Line Tube (MB-390147).

Part No. Pumping line tube	DETERMINATION OF DETECTABLE LEAK						
	M.D.S. ÷ ((Response – Background) ÷ Leak value) = MDL						
OPERATOR'S LAST NAME	SCALE UNITS BEFORE HELIUM PROBE	SCALE UNITS WHILE ENCLOSURE FLOODING	MDS	Response	Background	Leak Value	MDL
	20X1	20X1	2	55X5 ~~30X5~~	20X1	3.91 xE-8	3.06 xE-10

Inspector [signature] 8-26-05 Date

5.33 Leak check 4.5k Intercept Lines Tubes (MB-390204). this mag. has only 2 4.5K inter. lines ok per Simon + Tom P.

Part No. 4.5K inter. line #1	DETERMINATION OF DETECTABLE LEAK						
	M.D.S. ÷ ((Response – Background) ÷ Leak value) = MDL						
OPERATOR'S LAST NAME	SCALE UNITS BEFORE HELIUM PROBE	SCALE UNITS WHILE ENCLOSURE FLOODING	MDS	Response	Background	Leak Value	MDL
Wilson	12X1	12X1	2	56X5	12X1	3.91 xE-8	2.91 xE-10

PART NO. 4.5K inter. line #2		SCALE UNITS BEFORE HELIUM PROBE	SCALE UNITS WHILE ENCLOSURE FLOODING	DETERMINATION OF MINIMUM DETECTABLE LEAK				
DATE TIME	OPERATOR'S LAST NAME			MDS ÷ ((Response - Bckgnd) ÷ Leak Value) = MDL				
8/26/05	Wilson	22X1	22X1	2	54X5	22X1	3.91X10-8	3.12X10-10

[signature] 8-26-05

6.0 Shield Assembly

6.1 Tap the PEM nuts prior to installing shield. Use care in tightening screws so they don't break.

Technician(s) _____ Date 9/~~10~~09/05

6.2 Lift the Cold Mass Assembly and place the Center Section (ME-390164) and End Sections (ME-390162) on the Insertion Rails. Lower the Cold mass back onto the rails ensuring the holes in the Shield Sections line up with Support Rollers.

Technician(s) _____ Date 9-10-05

6.3 Insert the Mid Sections (ME-390163) and the Support Bands (MD-390083).

Technician(s) _____ Date 9-10-05

6.4 Assemble the bottom half of the shield. Leave all bolts loose. Spray all screw threads with Molybdenum.

Lower Shield Section
(ME-390082)

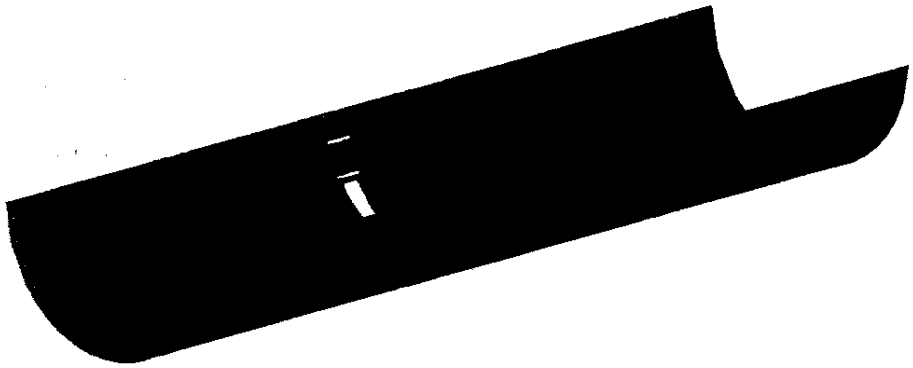

Technician(s) _____ Date 9-10-05

6.5 Assemble the Cooling Tubes (MD-390165) to the Bottom Half of the Shield.

Technician(s) _____ Date 9-10-05

6.6 Lift the Cold mass and place the Shield Inner and Outer MLI Blankets (ME-390313 & ME-390314) onto the insertion Rails in the correct orientation.

Note(s):

Place the Outer Blanket (ME-390314) on the Rails first.

Technician(s) _____ Date 9-12-05

6.7 Lower the Cold mass onto the rails. Ensure the slits in the blankets line up with Support Rollers.

Technician(s) _____ Date 9-12-05

6.8 Install the Cold Mass MLI Blankets per (ME-390302) and in the same position as Step 5.6. The center blanket may need to be rotated 90°. Tape the seams instead of using the Velcro, if necessary.

Technician(s) _____ Date 9-12-05

6.9 Cut and install the pipe MLI blankets per Q2 Piping Insulation (ME-390306).

Technician(s) _____ Date 9-12-05

6.10 Install the Upper Shield per Q2 Thermal Shield Assembly (ME-390161). Spray all screw threads with Molybdenum.

Technician(s) _____ Date 9-12-05

6.11 Install the Shield Blankets (ME-390313 & ME-390314). Cutouts will have to be made for the Upper Support Lugs.

Technician(s) _____ Date 9-12-05

7.0 Cold Mass Insertion into the Vacuum Vessel

7.1 Install Pig Putty between the Vacuum Vessel and the Insertion Rails.

Technician(s) Date 9/13/05

7.2 Install the Cold Mass/Pull-in Tooling.

Technician(s) Date 9/13/05

7.3 Mount the Pneumatic Winch to floor on the West side of the Vacuum Vessel.

Technician(s) Date 9-13-05

7.4 Connect the cable to the Pull-in Tooling.

Technician(s) Date 9-13-05

7.5 Pull the Cold mass Assembly into the Vacuum Vessel.

Technician(s) Date 9-13-05

7.6 When the Cold Mass is fully inserted, install the Suspension System Adjusting Screws (MB-390039).

Note(s):

Ensure proper lubrication on adjusting screws. Check threads on screw and vacuum vessel prior to assembly and fix if necessary.

Technician(s) Date 9-14-05

7.7 Clean the following parts fromQ2 Heat Exchanger Corrugated Tube Assembly (ME-390143).

Part Name	Part Number	Quantity	Completed
Corrugated Tube Weldment	**(ME-390394)**	**1**	✓
Corrugated Tube Support	**(MB-390028)**	**8**	✓
Corrugated Tube Restrictor	**(ME-390029)**	**2**	✓

Technician(s) Date 9-14-05

7.8 Assemble Corrugated Tube Supports (MB-390028) and Restrictors (MB-390029) to the Heat Exchanger Corrugated Tube per (ME-390143).

Technician(s) _____ Date 9-14-05

7.9 Slide the Corrugated Tube Assembly (ME-390143) into the Heat Exchanger Outer Shell per (ME-390142).

Technician(s) _____ Date 9-14-05

7.10 Adjust the Suspension System Adjusting Screw (MB-390039) as needed to center the Cold Mass in the Vacuum Vessel.

Technician(s) _____ Date 9-14-05

7.11 At the **Q2a** end, measure 1m 411.8 mm [55.58 in.] and cut the lead as per Q2 Module Assembly Q2a Lead End (ME-369895, sheet 3 of 4). Have a Weldor fuse the ends of the Superconducting Cable before shipping Magnet.

Technician(s) N/A _____ Date _____

Weldor(s) N/A _____ Date _____

7.12 At the **Q2b** end, measure 511.8 mm [20.15 in.] and cut the lead as per Q2 Module Assembly Q2b Lead End Details (ME-369895, sheet 2 of 4). Have a Weldor fuse the ends of the Superconducting Cable before shipping Magnet.

Technician(s) N/A _____ Date _____

Weldor(s) N/A _____ Date _____

8.0 Electrical Inspection

8.1 Perform an electrical inspection on each of the Individual Quadrants and the Cold Masses. Refer to the Valhalla and Leader Free Standing Coil Measurement Procedure (ES-292306).

To measure the resistance of a bussed Q2:

1. Use Valhalla Scientific 4300B digital micro-ohmmeter.
2. Set Test Current to 1 amp.
3. Set Scale to 2V full scale.
4. Turn temperature compensation on.
5. Turn test current off.
6. Put jumper between Q2a Q3 inner power lead and 5 KA bus as shown in figure.
7. Connect I_{HI} to the 5KA bus (Q2a Q3 inner power lead) as shown in figure.
8. Connect I_{LO} to the Q2b Q3 inner power lead as shown in figure.
9. Turn test current on.
10. Connect V_{HI} and V_{LO} buttons to voltage taps as shown below.
11. Read resistance and record in traveler.

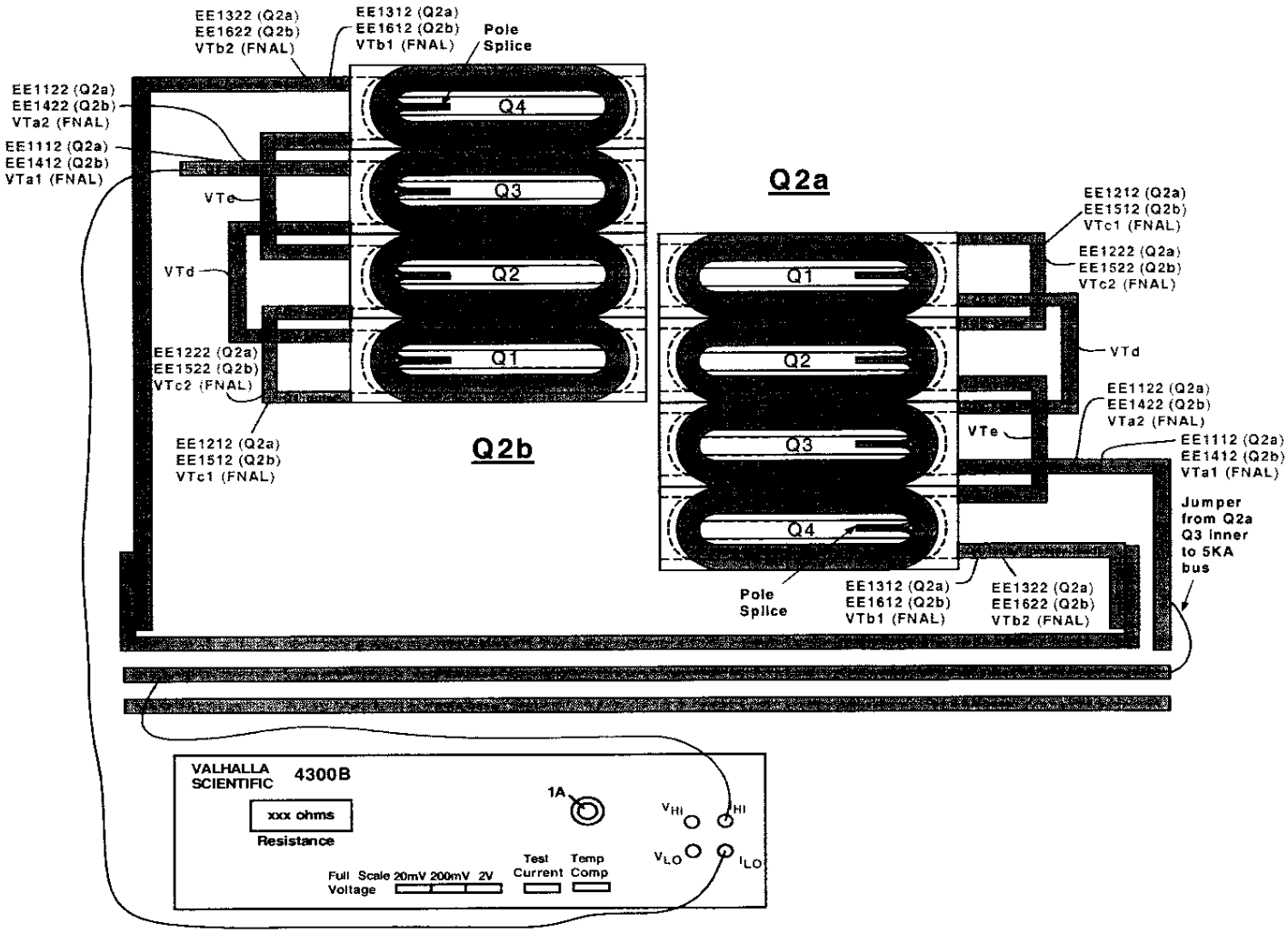

(Q2a) Resistance				Nominal ~ 560 to 585 mΩ
Voltage Tap Serial Numbers				Quadrant Total Resistance
Connect	Fermi	CERN	Quadrant	
V_{HI}	VTdQ2a	EMPTY	Quadrant 1	577.1 mΩ
V_{LO}	VTc1Q2a	EE1212		
V_{HI}	VTc1Q2a	EE1212	Quadrant 2	579.3 mΩ
V_{LO}	VTeQ2a	EMPTY		
V_{HI}	VTa1Q2a	EE1112	Quadrant 3	579.4 mΩ
V_{LO}	VTdQ2a	EMPTY		
V_{HI}	VTeQ2a	EMPTY	Quadrant 4	579.6 mΩ
V_{LO}	VTb1Q2a	EE1312		

Note: When Measuring Total Cold Mass, Set Test Current to 0.1 Amp				
V_{HI}	VTa1Q2a	EE1112	Total Cold Mass	Nominal ~ 2.305 Ω
V_{LO}	VTb1Q2a	EE1312		2.316 Ω

Technician(s) _____ Date 9-14-05

Check resistance of Redundant Voltage Taps.

Q2a Redundant Voltage Taps			
Connect	Fermi	CERN	Resistance
V_{HI}	VTa2Q2a	EE1122	1156.2 Ω
V_{LO}	VTc2Q2a	EE1222	
V_{HI}	VTc2Q2a	EE1222	1158.6 Ω
V_{LO}	VTb2Q2a	EE1322	

Technician(s) _____ Date 9-14-05

To measure Ls and Q of a Bussed Q2a:

1. Use Agilent 4263B LCR Meter.
2. Turn power on by pushing Line button. Wait 30 seconds until display screen is lit.
3. Recall program #1. To do this, push recall (Rcl), then push the #1, then push Enter.
4. Push Auto/Hold button to release hold.
5. Verify that the frequency displayed in the upper right corner of the display screen is 1000 Hz and the level recorded in the lower right corner of the display screen is 1V or 1000 mV.
6. Connect jumper between Q2a/Quadrant 3 inner power lead and 5KA bus as shown in figure.
7. Connect H_{cur} to Q2b/Quadrant 3 inner power lead as shown in figure.
8. Connect L_{cur} to 5KA bus as shown in figure.
9. Connect H_{pot} and L_{pot} buttons to voltage taps as shown below.

To measure Q2a:

- To measure Q1, connect H_{pot} to VTc1 (EE1212 for Q2a), and L_{pot} to VTd.
- To measure Q2, connect H_{pot} to VTe, and L_{pot} to VTc1 (EE1212 for Q2a).
- To measure Q3, connect H_{pot} to VTd and L_{pot} to VTa1 (EE1112 for Q2a).
- To measure Q4, connect H_{pot} to VTb1 (EE1312 for Q2a), and L_{pot} to VTe.
- To measure total, connect H_{pot} to VTb1 (EE1312 for Q2a), and L_{pot} to VTa1 (EE1112 for Q2a).

10. Read Ls and Q from display and record in traveler.

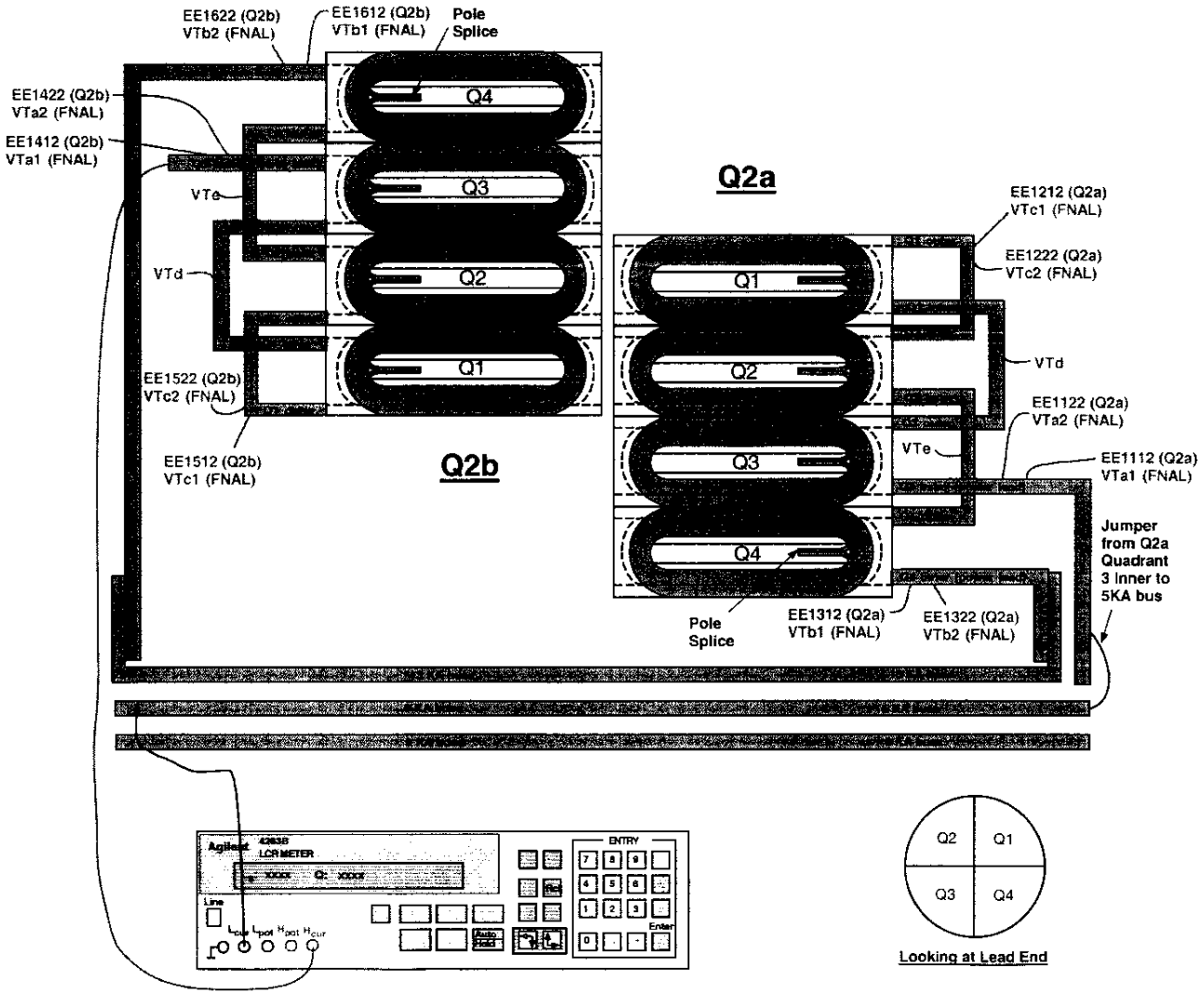

(Q2a) Inductance				Nominal ~ 3.34 to 3.48 mH
Voltage Tap Serial Numbers				Quadrant Total Inductance
Connect	Fermi	CERN	Quadrant	
H_{POT}	VTc1Q2a	EE1212	Quadrant 1	3.401 mH
L_{POT}	VTdQ2a	EMPTY		
H_{POT}	VTeQ2a	EMPTY	Quadrant 2	3.397 mH
L_{POT}	VTc1Q2a	EE1212		
H_{POT}	VTa1Q2a	EE1112	Quadrant 3	3.372 mH
L_{POT}	VTdQ2a	EMPTY		
H_{POT}	VTb1Q2a	EE1312	Quadrant 4	3.398 mH
L_{POT}	VTeQ2a	EMPTY		

H_{POT}	VTb1Q2a	EE1312	Total Cold Mass	Nominal ~ 13.28 to 13.78 mH
L_{POT}	VTa1Q2a	EE1112		mH

(Q2a) Q-Factor				Nominal ~ 3.7 to 4.0
Voltage Tap Serial Numbers				Quadrant Total Q
Connect	Fermi	CERN	Quadrant	
H_{POT}	VTc1Q2a	EE1212	Quadrant 1	3.8
L_{POT}	VTdQ2a	EMPTY		
H_{POT}	VTeQ2a	EMPTY	Quadrant 2	3.8
L_{POT}	VTc1Q2a	EE1212		
H_{POT}	VTdQ2a	EMPTY	Quadrant 3	3.8
L_{POT}	VTa1Q2a	EE1112		
H_{POT}	VTb1Q2a	EE1312	Quadrant 4	3.8
L_{POT}	VTeQ2a	EMPTY		

H_{POT}	VTb1Q2a	EE1312	Total Cold Mass	Nominal ~ 3.7 to 4.0
L_{POT}	VTa1Q2a	EE1112		

Technician(s)

9-14-05
Date

To measure the resistance of a bussed Q2:

1. Use Valhalla Scientific 4300B digital micro-ohmmeter.
2. Set Test Current to 1 amp.
3. Set Scale to 2V full scale.
4. Turn temperature compensation on.
5. Turn test current off.
6. Put jumper between Q2a Q3 inner power lead and 5 KA bus as shown in figure.
7. Connect I_{HI} to the 5KA bus (Q2a Q3 inner power lead) as shown in figure.
8. Connect I_{LO} to the Q2b Q3 inner power lead as shown in figure.
9. Turn test current on.
10. Connect V_{HI} and V_{LO} buttons to voltage taps as shown below.
11. Read resistance and record in traveler.

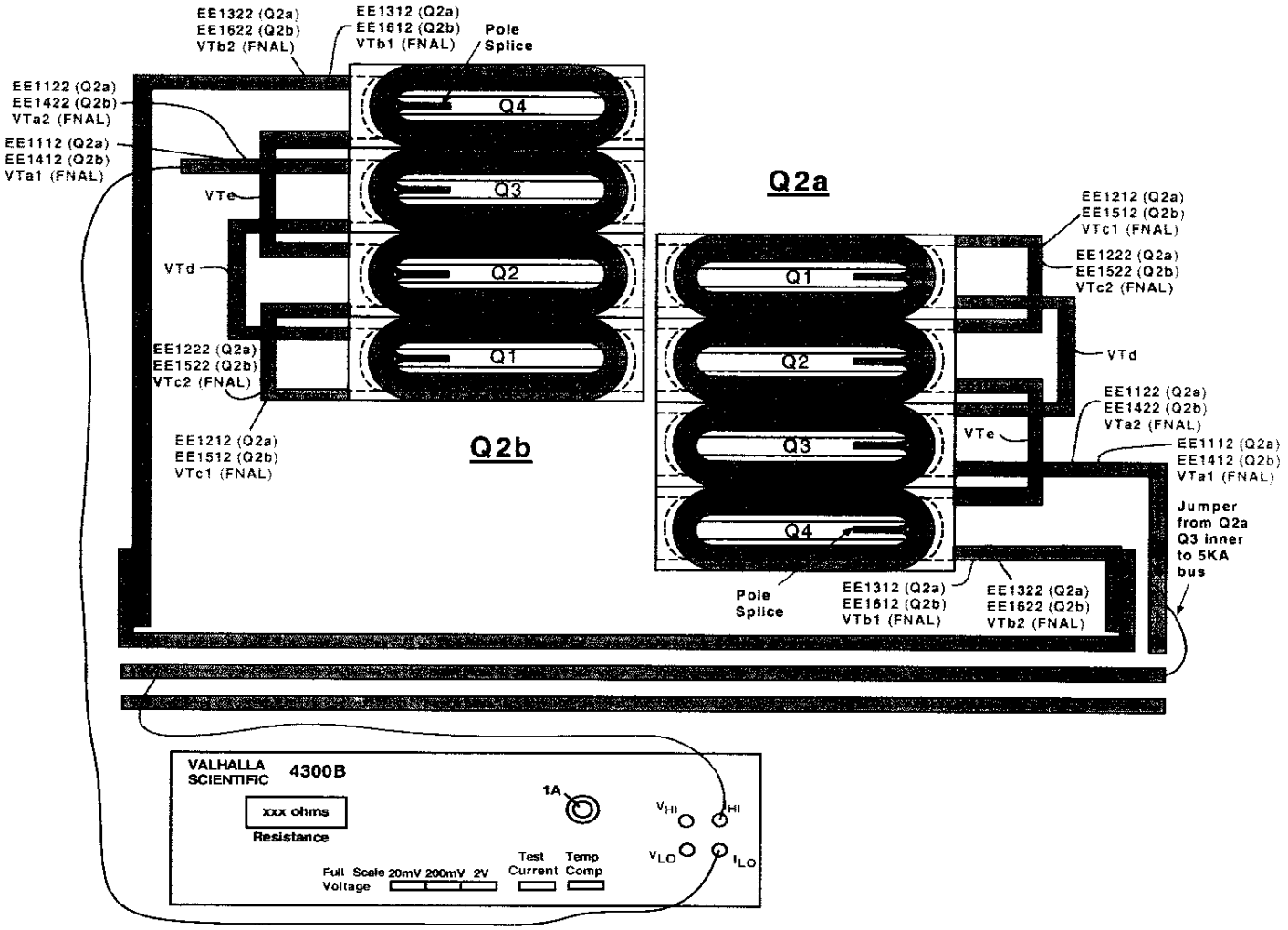

(Q2b) Resistance				Nominal ~ 560 to 585 mΩ
Voltage Tap Serial Numbers				Quadrant Total Resistance
Connect	Fermi	CERN	Quadrant	
V_{HI}	VTc1Q2b	EE1512	Quadrant 1	578.3 mΩ
V_{LO}	VTdQ2b	EMPTY		
V_{HI}	VTeQ2b	EMPTY	Quadrant 2	578.3 mΩ
V_{LO}	VTc1Q2b	EE1512		
V_{HI}	VTdQ2b	EMPTY	Quadrant 3	578.7 mΩ
V_{LO}	VTa1Q2b	EE1412		
V_{HI}	VTb1Q2b	EE1612	Quadrant 4	578.2 mΩ
V_{LO}	VTeQ2b	EMPTY		

Note: When Measuring Total Cold Mass, Set Test Current to 0.1 Amp				
V_{HI}	VTb1Q2b	EE1612	Total Cold Mass	Nominal ~ 2.305 Ω
V_{LO}	VTa1Q2b	EE1412		2.314 Ω

Technician(s) _____ Date 9-14-05

Check the resistance of the Redundant Voltage Taps.

Q2b Redundant Voltage Taps			
Connect	Fermi	CERN	Resistance
V_{HI}	VTc2Q2b	EE1522	1156.5 Ω
V_{LO}	VTa2Q2b	EE1422	
V_{HI}	VTb2Q2b	EE1622	1156.2 Ω
V_{LO}	VTc2Q2b	EE1522	

Technician(s) _____ Date 9-14-05

To measure Ls and Q of a Bussed Q2b:

1. Use Agilent 4263B LCR Meter.
2. Turn power on by pushing line button. Wait 30 seconds until display screen is lit.
3. Recall program #1. To do this, push recall (Rcl), then push #1, then push Enter.
4. Push Auto/Hold button to release hold.
5. Verify that the frequency displayed in the upper right corner of the display screen is 1000 Hz and the level recorded in the lower right corner of the display screen is 1V or 1000 mV.
6. Connect jumper between Q2a/Quadrant 3 inner power lead and 5KA bus as shown in figure.
7. Connect H_{cur} to 5KA bus as shown in figure.
8. Connect L_{cur} to Q2b/Quadrant 3 inner power lead as shown in figure.
9. Connect H_{pot} and L_{pot} buttons to voltage taps as shown below.

To measure Q2b:

- To measure Q1, connect H_{pot} to VTc1 (EE1512 for Q2b), and L_{pot} to VTd.
- To measure Q2, connect H_{pot} to VTe and L_{pot} to VTc1 (EE1512 for Q2b).
- To measure Q3, connect H_{pot} to VTd and L_{pot} to VTa1 (EE1412 for Q2b).
- To measure Q4, connect H_{pot} to VTb1 (EE1612 for Q2b) and L_{pot} to VTe.
- To measure total, connect H_{pot} to VTb1 (EE1612 for Q2b) and L_{pot} to VTa1 (EE1412 for Q2b).

10. Read Ls and Q from display and record in traveler.

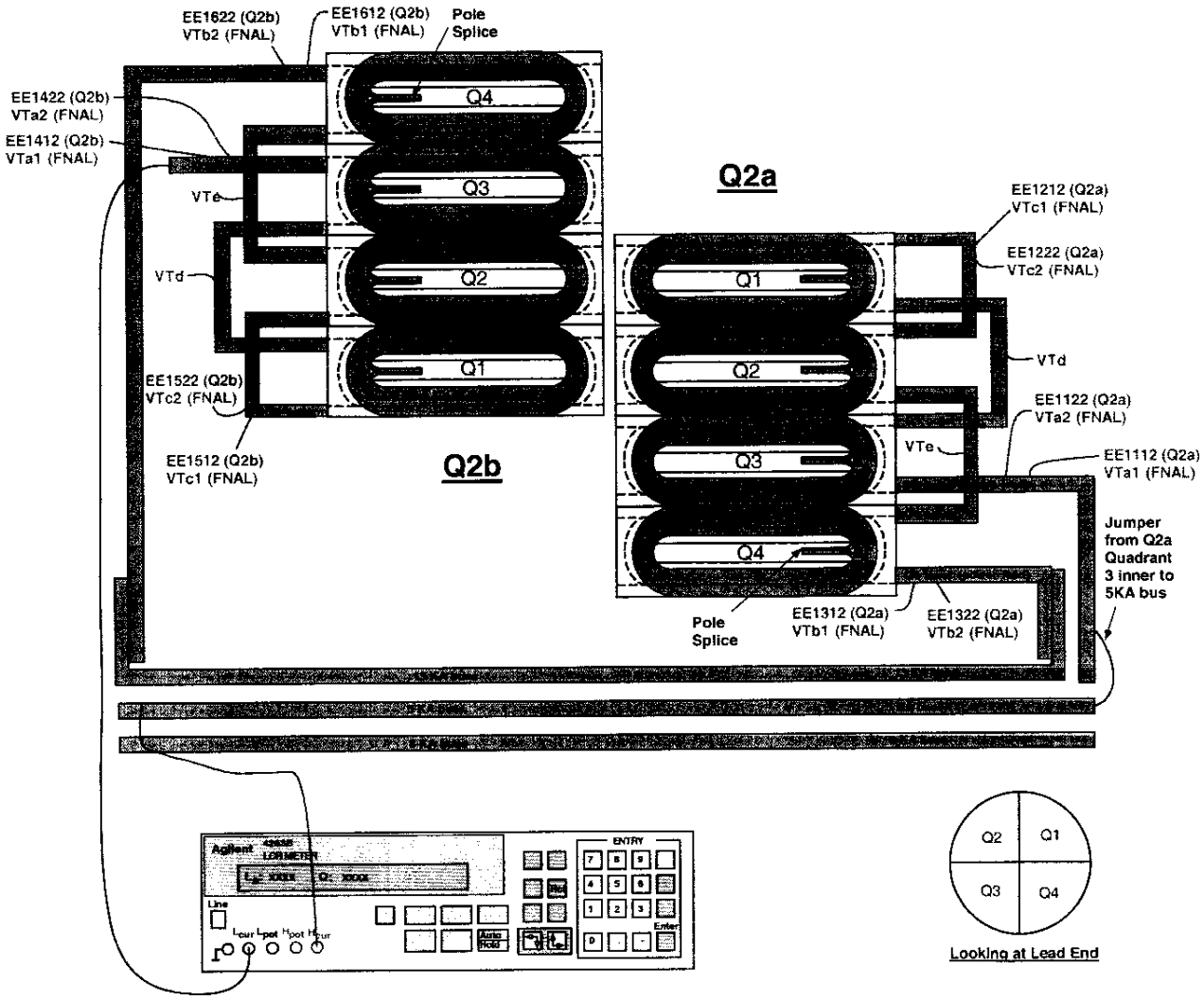

(Q2b) Inductance				Nominal ~ 3.34 to 3.48 mH
Voltage Tap Serial Numbers				Quadrant Total Inductance
Connect	Fermi	CERN	Quadrant	
H_{POT}	VTc1Q2b	EE1512	Quadrant 1	3.429 mH
L_{POT}	VTdQ2b	EMPTY		
H_{POT}	VTeQ2b	EMPTY	Quadrant 2	3.414 mH
L_{POT}	VTc1Q2b	EE1512		
H_{POT}	VTdQ2b	EMPTY	Quadrant 3	3.394 mH
L_{POT}	VTa1Q2b	EE1412		
H_{POT}	VTb1Q2b	EE1612	Quadrant 4	3.446 mH
L_{POT}	VTeQ2b	EMPTY		

H_{POT}	VTb1Q2b	EE1612	Total Cold Mass	Nominal ~ 13.28 to 13.78 mH
L_{POT}	VTa1Q2b	EE1412		13.695 mH

(Q2b) Q-Factor				Nominal ~ 3.7 to 4.0
Voltage Tap Serial Numbers				Quadrant Total Q
Connect	Fermi	CERN	Quadrant	
H_{POT}	VTc1Q2b	EE1512	Quadrant 1	3.8
L_{POT}	VTdQ2b	EMPTY		
H_{POT}	VTeQ2b	EMPTY	Quadrant 2	3.8
L_{POT}	VTc1Q2b	EE1512		
H_{POT}	VTdQ2b	EMPTY	Quadrant 3	3.9
L_{POT}	VTa1Q2b	EE1412		
H_{POT}	VTb1Q2b	EE1612	Quadrant 4	3.9
L_{POT}	VTeQ2b	EMPTY		

H_{POT}	VTb1Q2b	EE1612	Total Cold Mass	Nominal ~ 3.7 to 4.0
L_{POT}	VTa1Q2b	EE1412		3.8

Technician(s)

9-14-05
Date

To measure the resistance of a Thermometer (RTD):

1. Use Hewlett Packard HP3457A digital multimeter.
2. Record temperature of building within +/- 5 degrees.
3. Press line button to turn line on.
4. Connect wires as shown in Figure below.
   U+ (Black) to Sense HI
   I+ (Yellow) to Input HI
   U- (Red) to Sense LO
   I- (Green) to Input LO
5. Push blue button (function key) once.
6. Push OHMF button.
7. Verify arrow in readout is above the 4WΩ (meaning a 4 wire resistance measurement).
8. Read resistance in ohms and record in traveler.

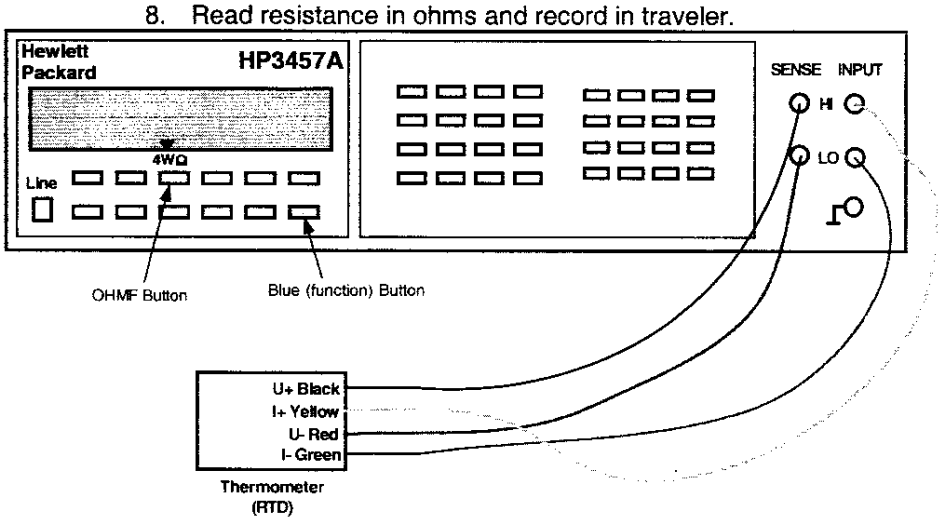

To measure the resistance of a Cryogenic (Warm-up) Heater

1. Use Hewlett Packard HP3457A digital multimeter.
2. Record temperature of building within +/- 5 degrees.
3. Press line button to turn line on.
4. Connect wires as shown in Figure below.
5. Push blue button (function key) once.
6. Push OHMF button.
7. Verify arrow in readout is above the 4WΩ (meaning a 4 wire resistance measurement).
   Note: Although this is technically a 4 wire measurement, it is effectively a 2 wire measurement, since there are only 2 wires connected to each heater.
8. Read resistance in ohms and record in traveler.

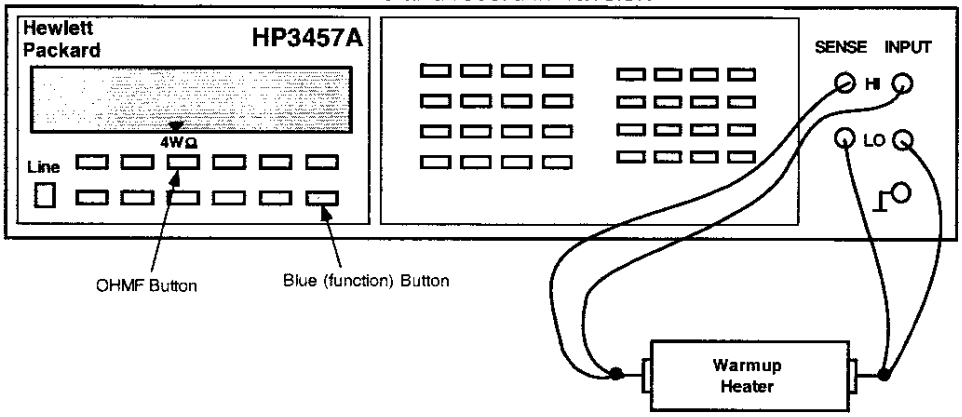

Q2a - RTD's and Cryogenic (warm-up) Heaters

Temperature of Building (+/- 5°): 75°F

Component	Fermi	CERN	Resistance	Range	Mfr. Resistance (Expedition)
Q2a RTD, primary	TaQ2a	TT8312	56.447 Ω	60 to 70 Ω	56.537 Ω
Q2a RTD, redundant	TbQ2a	TT8322	56.27 Ω	60 to 70 Ω	56.313 Ω
Q2A Cryogenic (warm-up) Heater (LE) - wire toward cold mass end plate (CERN #1 I+)	W1aQ2A	EH8312+	18.115 Ω		
Q2A Cryogenic (warm-up) Heater (LE) - wire toward cold mass mag center (CERN #1 I-)	W2aQ2A	EH8312-			
Q2A Cryogenic (warm-up) Heater (Non-LE) - wire toward cold mass end plate (CERN #2 I+)	W1bQ2A	EH8322+	17.820 Ω		
Q2A Cryogenic (warm-up) Heater (Non-LE) - wire toward cold mass mag center (CERN #2 I-)	W2bQ2A	EH8322-			

Technician(s)

9-14-05
Date

Q2b - RTD's and Cryogenic (warm-up) Heaters

Temperature of Building (+/- 5°): 75°F

Component	Fermi	CERN	Resistance	Range	Mfr. Resistance (Expedition)
Q2b RTD, primary	TaQ2b	TT8332	59.046 Ω	60 to 70 Ω	59.084 Ω
Q2b RTD, redundant	TbQ2b	TT8342	58.953 Ω	60 to 70 Ω	59.054 Ω
Q2B Cryogenic (warm-up) Heater (LE) - wire toward cold mass end plate (CERN #1 I+)	W1aQ2B	EH8332+	17.833 Ω		
Q2B Cryogenic (warm-up) Heater (LE) - wire toward cold mass mag center (CERN #1 I-)	W2aQ2B	EH8332-			
Q2B Cryogenic (warm-up) Heater (Non-LE) - wire toward cold mass end plate (CERN #2 I+)	W1bQ2B	EH8342+	17.754 Ω		
Q2B Cryogenic (warm-up) Heater (Non-LE) - wire toward cold mass mag center (CERN #2 I-)	W2bQ2B	EH8342-			

Technician(s)

9-14-05
Date

Using the Hewlett Packard HP3457A digital multimeter, measure the Strip Heater Resistance for Q2a and Q2b.

Q2a Strip Heater Resistance				
Fermi	CERN	Description	Limit	Resistance
H1aQ2a	YT1112+	Circuit A	18.20 to 21 Ω	21.341 Ω
H2aQ2a	YT1112-			
H1bQ2a	YT1122+	Circuit B	18.20 to 21 Ω	21.329 Ω
H2bQ2a	YT1122-			

Technician(s) _____ Date 9-14-05

Q2b Strip Heater Resistance				
Fermi	CERN	Description	Limit	Resistance
H1aQ2b	YT1132+	Circuit A	18.20 to 21 Ω	19.191 Ω
H2aQ2b	YT1132-			
H1bQ2b	YT1142+	Circuit B	18.20 to 21 Ω	19.420 Ω
H2bQ2b	YT1142-			

Technician(s) _____ Date 9-14-05

8.2 Using the HP3457A, connect power thru the connector Power Leads (HA2 and HB2 to measure Q2-H2 or VA2 and VB2 to measure Q2-V2). Connect the Sense Leads as shown in table below and record resistance.

REPLACE W/ ADDED PAGE 1 OF 1

Corrector Bus Leads

	V2A	V2B	H2A	H2B
	V1A	V1B	H1A	H1B

(View Looking into Q2b)

Per TRR# 1749

MCBX Corrector Coil Taps			
Component	FermiLab Label	CERN Label	Resistance
Q2-H2	VTH2	EE8122	
	HA2	N/A	Ω
Q2-V2	VTV2	EE8112	
	VA2	N/A	Ω

Technician(s) _____ Date _____

8.3 Check Q1 Instrumentation Bus Wires for Continuity.

Module	Pin	Fermi	CERN	KEK	Description	Done
M2	1	VTa1Q1	EE1111	a1	Q1 Lead Voltage Tap "a", primary	✓
M2	2	VTa2Q1	EE1121	a2	Q1 Lead Voltage Tap "a", redundant	✓
M2	3	VTc1Q1	EE1211	c1	Q1 Center Voltage Tap "c", primary	✓
M2	4	VTc2Q1	EE1221	c2	Q1 Center Voltage Tap "c", redundant	✓
M2	5	VTb1Q1	EE1311	b1	Q1 Lead Voltage Tap "b", primary	✓
M3	5	VTb2Q1	EE1321	b2	Q1 Lead Voltage Tap "b", redundant	✓
M5	1	VTH1	EE8121		Corrector voltage tap Q1-H1 (skew dipole) (on MCBX, MCBXH, A+ lead)	✓
M5	2	VTV1	EE8111		Corrector voltage tap Q1-V1 (normal dipole) (on MCBX, MCBXV A+ lead)	✓
M7	1	W1aQ1	EH8311+		Q1 Cryogenic Heater lead end - wire at top (CERN #1 I+)	✓
M7	2	W2aQ1	EH8311-		Q1 Cryogenic Heater lead end - wire at bottom (CERN #1 I-)	✓
M7	3	W1bQ1	EH8321+		Q1 Cryogenic Heater non-lead end - wire at top (CERN #2 I+)	✓
M7	4	W2bQ1	EH8321-		Q1 Cryogenic Heater non-lead end - wire at bottom (CERN #2 I-)	✓
M9	1	H1aQ1	YT1111+	HA1	Q1 Protection (Strip) Heater, ("a" circuit) (CERN lead #1+)	✓
M9	3	H2aQ1	YT1111-	HA2	Q1Protection (Strip) Heater, ("a" circuit) (CERN lead #1-)	✓
M9	5	H1bQ1	YT1121+	HB1	Q1 Protection (Strip) Heater, ("b" circuit) (CERN lead #2+)	✓
M10	4	H2bQ1	YT1121-	HB2	Q1 Protection (Strip) Heater, ("b" circuit) (CERN lead #2-)	✓
M12	1	TaQ1_I+	TT8311 I+		Q1 RTD, primary Wire color: Yellow	✓
M12	2	TaQ1_I-	TT8311 I-		Q1 RTD, primary Wire color: Green	✓
M12	3	TaQ1_V+	TT8311 U+		Q1 RTD, primary Wire color: Black	✓
M12	4	TaQ1_V-	TT8311 U-		Q1 RTD, primary Wire color: Red	✓
M12	5	TbQ1_I+	TT8321 I+		Q1 RTD, primary Wire color: Yellow	✓
M12	6	TbQ1_I-	TT8321 I-		Q1 RTD, primary Wire color: Green	✓
M12	11	TbQ1_V+	TT8321 U+		Q1 RTD, primary Wire color: Black	✓
M12	10	TbQ1_V-	TT8321 U-		Q1 RTD, primary Wire color: Red	✓

Technician(s)

9-14-05
Date

9.0 Final Preparations

9.1 Install Target Holders (Right, MD-390539), (Left, MD-390540) and (MD-390211) as per Q2 Cryostat General Assembly (ME-390127).

N/A

Technician(s) _____ Date _____

9.2 Install Reference Socket Cup (MA-390426) as per Q2 Cryostat General Assembly (ME-390127).

N/A

Technician(s) _____ Date _____

9.3 Drill Holes for Spring Pins (MA-393360) in each of the three types of Target Holders (Right, MD-390539, Left, MD-390540, & MD-390211). Ensure that the holes are centered in a straight line as well as equidistant between the two corresponding bolt holes.

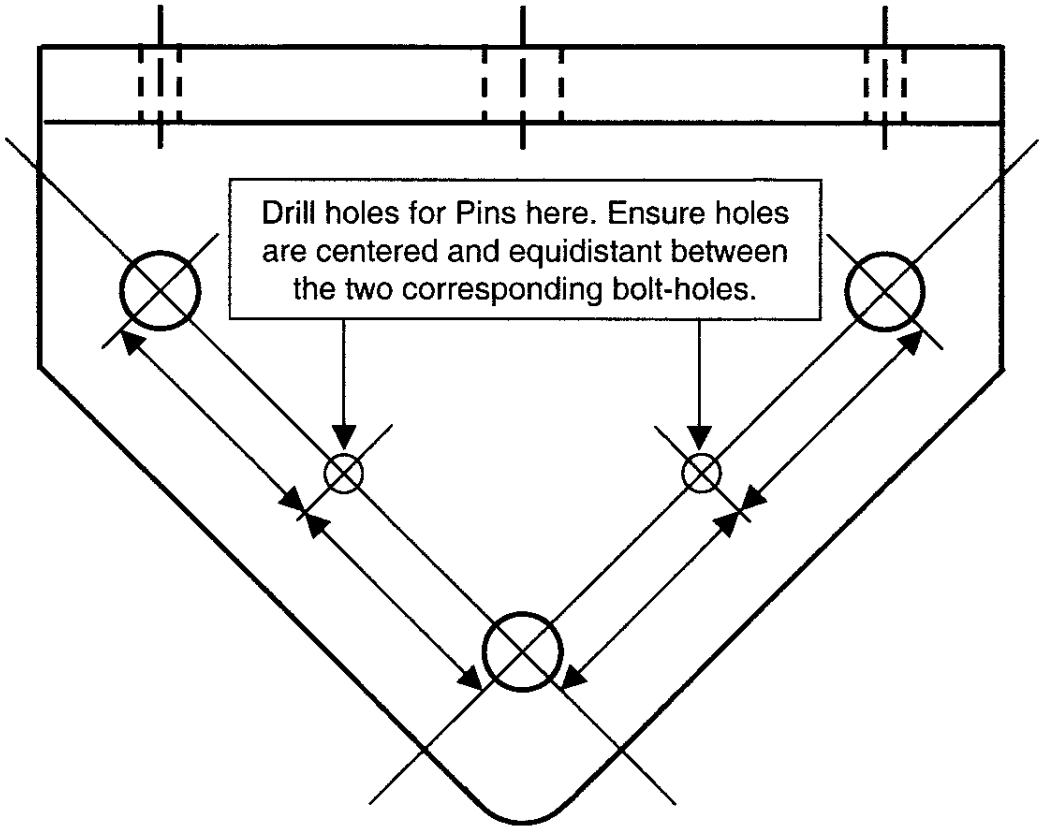

Target Holder

(Right and Left Target Holder will differ in appearance from the above, but holes will be made the same way.)

Technician(s) _____ Date _____

9.4 Install the Vinyl Flange Covers (MA-390491), (MA-390492), (MA-390493), (MA-390494), & the Alignment Fiducial Covers (MA-390495).

Technician(s) _____ Date _____

10.0 Production Complete

10.1 Process Engineering: verify that the LHC Cryostat Assembly Traveler (5520-TR-333644) is accurate and complete. This shall include a review of all steps to ensure that all operations have been completed and signed off. Ensure that all Discrepancy Reports, Nonconformance Reports, Repair/Rework Forms, Deviation Index and dispositions have been reviewed by the Responsible Authority for conformance before being approved.

Comments:

Process Engineering/Designee

Date 1/11/06

8.2 Using the HP3457A, connect power thru the connector Power Leads (H2A and H2B to measure Q2-H2 or V2A and V2B to measure Q2-V2). Connect the Sense Leads as shown in table below and record resistance.

Corrector Bus Leads

	V2A	V2B	H2A	H2B
	V1A	V1B	H1A	H1B

(View Looking into Q2b)

Readout Labels		Power Labels	Resistance
V2A	EE8112	V2A, V2B	.03 Ω
EE8112	V2B		17.734 Ω
V2A	V2B		17.732 Ω
H2A	EE8122	H2A, H2B	.04 Ω
EE8122	H2B		21.698 Ω
H2A	H2B		21.740 Ω

E. [illegible]
Technician(s)

9-14-05
Date

TD - Engineering Fabri[illegible]ion Component Kit List

ORIGINAL

Process Engineering

Component Serial No. LQXB06-1

Kit submitted by: JOHN SZOSTAK Ext. 2003

Fermi ID No. 02943C

Date submitted: 4-Aug-05

Need date: 9-Aug-05

Deliver to: ICB

Use with Traveler No. 333644

Job No. 248

M&S task number: 300 1.1.1.3.4

Drawing Title: Q2 CRYOSTAT ASSEMBLY (GENERAL)

Drawing No. ME-390206 Rev. D

Material Control

Parts available

Verified by: Marsha Schmidt

Fermi ID No. 04223N

Date submitted to stockroom: 8/8/2005

RECEIVED AUG 08 2005 MATERIAL CONTROL /IB4

Issued by:

Fermi ID No. 12792

Date issued: 8-10-05

Parts received by E&F:

Fermi ID No. 02943C

Date received by E&F: 8/10/05

	Description	Dwg Size	Number	Rev	Unit	Quantity Required	Location	Quantity Issued	E&F Verified	Routing Form Number	Spares Number / Comment
1	ADJUSTING SCREW	MB	390039	C	EA	6	IB4 Bin	6		81148	19 pcs.
2	VACUUM VESSEL ASSEMBLY	ME	390129	E	EA	1	ICB HAS				
3	TARGET HOLDER	MD	390211	B	EA	6	ICB HAS				
4	BLANK, NON ROTATABLE CONFLAT FLANGE, 4.62" OD	MA	390374	*	EA	12	ICB HAS				
5	COPPER GASKET	MA	390375	*	EA	12	IB4 Bin	12		83138	81 pcs.
6	BOLT SET, HEX HEAD 5/16 - 24 x 1.25 LG.	MA	390376	*	EA	120	ICB HAS				
7	WASHER, 0.656" ID x 1.38" OD x 0.13 THK., S.S.	MA	390377	*	EA	12	ICB HAS				
8	TAYLOR HOBSON SOCKET CUP	MA	390426	*	EA	12	ICB HAS				
9	75MM DIA. FLANGE COVER	MA	390491	*	EA	6	ICB HAS				
10	114MM DIA. FLANGE COVER	MA	390492	*	EA	4	ICB HAS				

TD - Engineering Fabrication Component Kit List

ORIGINAL

	Description	Dwg Size	Number	Rev	Unit	Quantity Required	Location	Quantity Issued	E&F Verified	Routing Form Number	Spares Number / Comment
11	134MM DIA. FLANGE COVER	MA	390493	*	EA	8	ICB HAS				
12	201MM DIA. FLANGE COVER	MA	390494	*	EA	2	ICB HAS				
13	ALIGNMENT FIDUCIAL COVER	MA	390495	*	EA	12	ICB HAS				
14	TARGET HOLDER, RIGHT	MD	390539	*	EA	3	ICB HAS				
15	TARGET HOLDER, LEFT	MD	390540	*	EA	3	ICB HAS				
16	COLD MASS FIDUCIAL MOUNTING BLOCK	MB	390809	*	EA	2	R1,1,3	2	[illegible]	82261	8 pcs.
17	ADJUSTING SCREW VERSION 2 (BRONZE)	MC	390878	*	EA	6	R7,1,2	6	[illegible]	83342	50 pcs.
18	M16-2 x 70mm HEX SHSC, S.S.	MA	393021	*	EA	12	ICB HAS				
19	M6 FLAT WASHER 18-8 S.S.	MA	393024	*	EA	48	ICB HAS				
20	SPRING PIN, 8 x 26	MA	393031	*	EA	12	ICB HAS				
21	M10-1.5 x 25mm HEX SHSC, S.S.	MA	393036	*	EA	36	ICB HAS				
22	M6-1.0 x 35mm HEX SHCS 18-8 S.S.	MA	393045	*	EA	24	ICB HAS				
23	M8 x 30mm SPRING PIN 18-8 S.S.	MA	393048	*	EA	12	ICB HAS				
24	M10 LOCK WASHER 18-8 S.S.	MA	393220	*	EA	36	ICB HAS				
25	M4 SPRING PIN SLOTTED, PLAIN STEEL	MA	393360	*	EA	24	ICB HAS				
Q2 INSULATED SHIELD & PIPING ASSEMBLY		ME	390207	*	EA	1	ICB HAS				
26	Q2 SHIELD MLI INNER BLANKET	ME	390313	*	EA	1	ICB HAS				
27	Q2 SHIELD MLI OUTER BLANKET	ME	390314	*	EA	1	ICB HAS				

TD - Engineering Fabrication Component Kit List

ORIGINAL

	Description	Dwg Size	Number	Rev	Unit	Quantity Required	Location	Quantity Issued	E&F Verified	Routing Form Number	Spares Number / Comment
Q2 THERMAL SHIELD ASSEMBLY		ME	390161	C	EA	1	ICB HAS				
28	SUPPORT BAND	ME	390083	A	EA	8	ICB HAS				
29	RETAINER	MA	390086	*	EA	16	ICB HAS				
30	END SECTION	ME	390162	*	EA	4	ICB HAS				
31	MID SECTION	ME	390163	*	EA	4	ICB HAS				
32	CENTER SECTION	ME	390164	*	EA	2	ICB HAS				
33	COOLING TUBE WELDMENT	MD	390165	*	EA	2	ICB HAS				
34	ALUMINUM SPACER	MA	390373	*	EA	64	ICB HAS				
35	RETAINING WASHER	MA	390378	*	EA	394	IB4 Bin	394	QA	79002	1333 pcs.
36	THERMAL SHIELD BRACKET	MD	390783	*	EA	4	ICB HAS				
37	M5 x 16mm BUTTON HEAD CAP SCREW (Need 135 more)	MA	393028	*	EA	394	IB4 Bin	259	QA	79003	1117 pcs.
Q2 CRYOSTAT ASSEMBLY INTERNAL PIPING		ME	390208	E	EA	1					
38	HEAT EXCHANGER OUTER SHELL END FLANGE	MC	390031	B	EA	2	IB4 Bin	2	QA	77209	45 pcs.
39	PUMPING LINE END FLANGE	MC	390032	B	EA	2	IB4 Bin	2	QA	77210	47 pcs.
40	COOL DOWN LINE END FLANGE	MB	390033	B	EA	2	IB4 Bin	2	QA	7708	28 pcs.
41	RETAINING CLIP	MA	390103	*	EA	16	IB4 Bin	16	QA	76785	103 pcs.
42	HEAT EXCHANGER TO COLD MASS CONNECTOR	MC	390111	A	EA	1	R1,2,2	1	QA	83156	3 pcs.
43	TIE BAR RETAINING CLAMP	MB	390136	*	EA	8	ICB HAS				

ORIGINAL

TD - Engineering Fabric 'on Component Kit List

	Description	Dwg Size	Number	Rev	Unit	Quantity Required	Location	Quantity Issued	E&F Verified	Routing Form Number	Spares Number / Comment
44	PUMPING LINE PIPE STOP	MB	390149	*	EA	4	IB4 Bin	4	[illegible]	77133	36 pcs.
45	COOL DOWN LINE PIPE STOP	MB	390150	*	EA	4	IB4 Bin	4	[illegible]	77134	36 pcs.
46	Q2 4.5K INTERCEPT LINE TUBE	MB	390204	*	EA	2	P/N	2	[illegible]	N/A	7 pcs.
47	Q2 PIPE SUPPORT ASSEMBLY	MD	390258	A	EA	4	ICB HAS				
48	INTERCEPT LINE PIPE STOP	MA	390379	A	EA	6	IB4 Bin	6	[illegible]	78894	97 pcs.
49	PIPE SUPPORT BRACE	MB	390452	A	EA	4	ICB HAS				
50	M6 x 45mm HEX SHCS, S.S.	MA	393017	*	EA	8	ICB HAS				
51	M6 HEX NUT, S.S.	MA	393022	A	EA	8	ICB HAS				
52	M6 FLAT WASHER, S.S.	MA	393024	*	EA	8	ICB HAS				
53	M6 LOCK WASHER, S.S.	MA	393026	*	EA	8	ICB HAS				
54	Q2 COOLDOWN LINE REBUILD WELDMENT	MD	390887	*	EA	1					
55	TUBE EXTENSION WELD FITTING	MC	390881	*	EA	2	ICB HAS				
56	COOLDOWN LINE STD. 20 FT LONG TUBE	MD	390885	*	EA	2	ICB HAS				
57	CENTER TUBE	MD	390886	*	EA	1	ICB HAS				
58	Q2 PUMPING LINE REBUILD WELDMENT	MD	390890	*	EA	1					
59	PUMPING LINE PIPE EXTENSION WELD FITTING	MC	390883	*	EA	2	ICB HAS				
60	PUMPING LINE 20 FT LONG PIPE	MD	390888	*	EA	2	ICB HAS				
61	PUMPING LINE CENTER PIPE	MD	390889	*	EA	1	ICB HAS				

ORIGINAL

TD - Engineering Fabrication Component Kit List

	Description	Dwg Size	Number	Rev	Unit	Quantity Required	Location	Quantity Issued	E&F Verified	Routing Form Number	Spares Number / Comment
	Q2 HEAT EXHANGER REBUILD ASSEMBLY	ME	390884	*	EA	1					
	CORRUGATED TUBE ASSEMBLY	ME	390143	A	EA	1					
62	HEAT EXCHANGER CORRUGATED TUBE SUPPORT	MD	390028	*	EA	8	ICB HAS				
63	HEAT EXCHANGER CORRUGATED TUBE RESTRICTOR	MD	390029	A	EA	2	ICB HAS				
64	Q2 HEAT EXCHANGER CORRUGATED TUBE WELDMENT	ME	390394	*	EA	1	ICB HAS				
65	OUTER SHELL 20 FT. LONG PIPE	MD	390882	*	EA	2	ICB HAS				
66	OUTER SHELL CENTER PIPE	MD	390880	*	EA	1	ICB HAS				
67	OUTER SHELL EXTENSION WELD FITTING	MD	390879	*	EA	2	ICB HAS				
	Q2 PIPING INSULATION	ME	390306	A	EA	1					
68	COLD MASS MLI CENTER BLANKET	ME	390305	*	EA	1	ICB HAS				
69	PIPING MLI END BLANKET	ME	390307	*	EA	2	ICB HAS				
70	PIPING MLI MID BLANKET	ME	390308	*	EA	2	ICB HAS				
	Q2 SUSPENSION SYSTEM INSTALLATION ASSEMBLY	ME	390310	*	EA	1					
71	TIE BAR SHIM, 6.4mm	MB	390118	*	EA	6	ICB HAS				
72	TIE BAR SHIM, 2.4mm	MB	390119	*	EA	6	ICB HAS				
73	TIE BAR SHIM, 0.6mm	MB	390120	*	EA	6	ICB HAS				
74	Q2 TIE BAR ASSEMBLY	MC	390167	*	EA	4	ICB HAS				
75	OUTBOARD SUSPENSION MOUNTING BRACKET	MD	390280	*	EA	4	ICB HAS				

TD - Engineering Fabrication Component Kit List

ORIGINAL

	Description	Dwg Size	Number	Rev	Unit	Quantity Required	Location	Quantity Issued	E&F Verified	Routing Form Number	Spares Number / Comment
76	MIDDLE SUSPENSION MTG BRACKET	MD	390281	*	EA	2	ICB HAS				
77	Q2 COLD MASS WELDED ASSEMBLY	ME	390309	B	EA	1	ICB HAS				
78	M8 x 50mm SHCS, S.S.	MA	393020	*	EA	18	ICB HAS				
79	M8 HEX NUT, S.S.	MA	393023	*	EA	18	ICB HAS				
80	M8 FLAT WASHER, S.S.	MA	393025	*	EA	18	ICB HAS				
81	M8 LOCK WASHER, S.S.	MA	393027	*	EA	18	ICB HAS				
	FIXED SUPPORT ASSEMBLY	ME	390041	D	EA	1	ICB HAS				
82	RING ASSEMBLY	ME	390043	B	EA	1	ICB HAS				
83	SUPPORT PIN	MB	390047	B	EA	2	ICB HAS				
84	1.0 mm THK SHIM	MA	390275	A	EA	8	ICB HAS				
85	0.5 mm THK SHIM	MA	390276	*	EA	8	ICB HAS				
86	M16 x 40.0 mm LG SHOULDER SCREW, 18-8 S.S.	MA	390277	*	EA	8	ICB HAS				
87	TWO-PIECE CLAMP-ON COLLAR	MA	390321	A	EA	4	ICB HAS				
88	0.13 mm THK SHIM	MA	390480	*	EA	8	ICB HAS				
89	0.25 mm THK SHIM	MA	390481	*	EA	12	ICB HAS				
	SLIDING SUPPORT ASSEMBLY	ME	390042	C	EA	2	ICB HAS				
90	RING ASSEMBLY	ME	390043	B	EA	2	ICB HAS				
91	SUPPORT PIN	MB	390047	B	EA	4	ICB HAS				

TD - Engineering Fabrication Component Kit List

ORIGINAL

	Description	Dwg Size	Number	Rev	Unit	Quantity Required	Location	Quantity Issued	E&F Verified	Routing Form Number	Spares Number / Comment
92	1.0 mm THK SHIM	MA	390275	A	EA	16	ICB HAS				
93	0.5 mm THK SHIM	MA	390276	*	EA	16	ICB HAS				
94	M16 x 40.0 mm LG SHOULDER SCREW, 18-8 S.S.	MA	390277	*	EA	16	ICB HAS				
95	0.13 mm THK SHIM	MA	390480	*	EA	16	ICB HAS				
96	0.25 mm THK SHIM	MA	390481	*	EA	24	ICB HAS				
	Q2 INSULATION INSTALLATION ASSEMBLY	ME	390302	A	EA	1	ICB HAS				
97	MLI END BLANKET	ME	390303	*	EA	2	ICB HAS				
98	MLI MID BLANKET	ME	390304	*	EA	2	ICB HAS				
99	MOUNTING LUG BLANKET	MC	390496	*	EA	8	ICB HAS				
	Q2 INSTALLATION TIE-ROD ASSEMBLY	MC	390637	*	EA	4	ICB HAS				
100	SHORT END THREAD ROD	MA	390635	*	EA	4	ICB HAS				
101	JAM NUT (LH)	MA	393046	*	EA	8	ICB HAS				
102	JAM NUT (RH)	MA	393225	*	EA	16	ICB HAS				
103	COUPLING NUT (RH / LH)	MA	393226	*	EA	8	ICB HAS				
104	THREAD ROD (RH) 6 FT. LONG	MA	393227	*	EA	4	ICB HAS				
105	THREAD ROD (LH) 3 FT. LONG	MA	393228	*	EA	4	ICB HAS				

ADDITIONAL PARTS REQUEST

ADDITIONAL PARTS REQUEST FORM SHALL BE USED TO ACCESS ALL ITEMS FROM INVENTORY WITH THE EXCEPTION OF PARTS KITS.

THIS FORM MUST BE SIGNED BY AN ACQUISITIONER BEFORE BRINGING TO THE STOCKROOM

MAGNET OR COIL # *LQXB06-1*

REQUESTED BY *Jim Rife*

DATE REQUESTED *8/19/05*

DELIVER TO *Jim Rife*

BUDGET CODE *LQB 300.1.1.1.3.3*

NEED BY DATE *8/19/05*

JOB TICKET # _____

MMR # _____

MACHINE SHOP REQ. # _____

PO # _____

PURCHASE RELEASE # _____

OTHER _____

PARTS STATUS (CHECK ONE)

☐ DEFECTIVE PARTS ISSUED ☐ PARTS SCRAPPED ☐ A/R ITEMS

☐ DEFECTIVE ASSEMBLY ☐ MISSING FROM KIT ALREADY ISSUED

☒ INDIVIDUAL PARTS ☐ CONSUMABLES ☐ PARTS LOST

ACQUISITIONER SIGNATURE M Schmidt CA **ID#** 4223 **DATE** 8/19/05

PLEASE INDICATE REVISION REQUIRED

	LOCATION	PART #	REV	QTY	UOM	DESCRIPTION	RF #	SIR #
6	*R1.3,2*	*MC-390879*	*0*	*2*	*Each*	*Heat Exchanger Weld Fitting*	83545	
6	*R1.3,3*	*MC-390881*	*0*	*2*	*Each*	*Cooldown Line Weld Fitting*	83546	
6	~~LCB~~ ? *R1,3,3*	*MC-390883*	*0*	*2*	*Each*	*Pumping Line Extension Weld Fitting*	83457	

STOCKROOM SIGNATURE [illegible] **ID#** 11938 **DATE** 19 August 2005

PARTS DELETED FROM DATABASE _____ **ID#** _____ **DATE** _____

A COPY OF THIS FORM IS TO BE INCLUDED IN WITH THE TRAVELER

PARTS RECEIVED BY [illegible] **ID#** 4895 **DATE** 8/19/05

Subject: Q2 4.5K lines
From: Tom Page <tpage@fnal.gov>
Date: Fri, 26 Aug 2005 08:48:30 -0500
To: Rife Jim <jrife@fnal.gov>, Damon Bice <dbice@fnal.gov>, Gould Steve <sgould@fnal.gov>
CC: tpage@fnal.gov, Nicol Tom <tnicol@fnal.gov>, Jim Kerby <kerby@fnal.gov>, Pfund Phil <pfund@fnal.gov>

All,

Use only two 4.5 K lines in the Q2-6 rebuild. These tubes will go in the center two holes.

Thanks.

-Tom

--
Thomas Page
Fermi National Accelerator Laboratory
TD/Engineering & Fabrication
P.O. Box 500, MS 316
Batavia, IL 60510
phone: 630.840.8019
fax: 630.840.8036
http://tdserver1.fnal.gov/page/thomas

Cryogenic Thermometer Traveller

DESCRIPTION

Part description:	Cryogenic thermometer	**Top Assembly Identification:**	~~TT8332~~ LQXB-Q6-1 Q2B Inst. Bus side
Part Identification:	HCQITESCXT-CR000870		
Serial Number:	CX_LS_X13879	**Manufactured By:**	

CABLING

Connector Tag Name TT8332

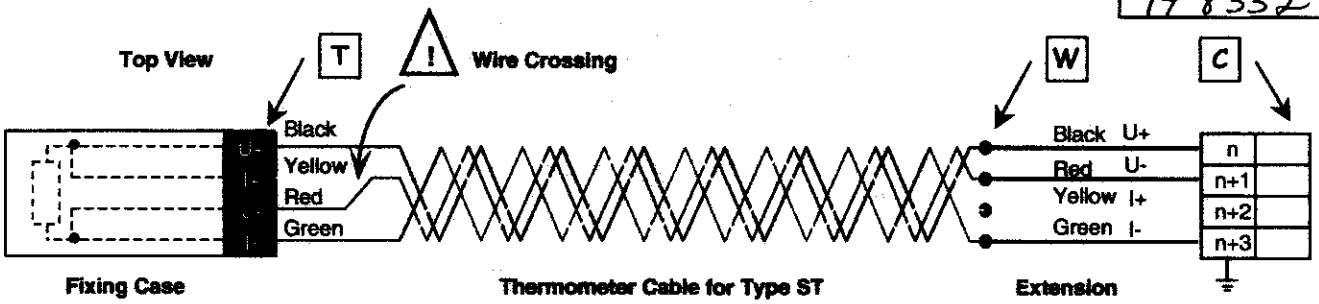

Fixing Case

Thread ☐
Hole ☐
Stud ☐

Thermometer Cable for Type ST

ρ (300 K) = 0.32 Ohm/m
Copper AWG 30
Length = ☐ m

Extension

ρ (300 K) = 0.07 Ohm/m
Copper AWG 24
Length: 0.8 m

CHECKS

Intervention	Date/ DD-MMM-YYYY	Check Point	R(U+,U-,I+,I-) [Ohm] 4W	R(U-,I-) [Ohm] 2W	R(U+,I+) [Ohm] 2W	R(U+,GND) [Ohm] 2W	Temperature [K]	Firm/Laboratory	Checked by
Calibration	*07-May-2001*	T	*60.1*	*0.18*	*0.18*	*OVL*	*Ambient*	*IPN*	*Joly*
Expedition	*15-Oct-2002*	T	*59.31*	*0.18*	*0.18*	*OVL*	*295*	*CERN*	*Vauthier*
Reception	7-15-05	T W C	59.084				79°	Fermi	LISA
		T W C							
		T W C							
		T W C							
		T W C							
		T W C							
		T W C							
		T W C							
		T W C							
		T W C							
		T W C							
		T W C							
		T W C							
		T W C							
		T W C							
		T W C							
		T W C							
		T W C							
		T W C							
		T W C							
		T W C							
		T W C							
		T W C							
		T W C							
		T W C							

Cryogenic Thermometer Traveller

DESCRIPTION

Part description:	Cryogenic thermometer	**Top Assembly Identification:**	~~TT8342~~ LQXB 16-1 Q2b NON-Bus side
Part Identification:	HCQITESCXT-CR000850	**Manufactured By:**	
Serial Number:	CX_LS_X13876		

CABLING

Connector Tag Name TT8342

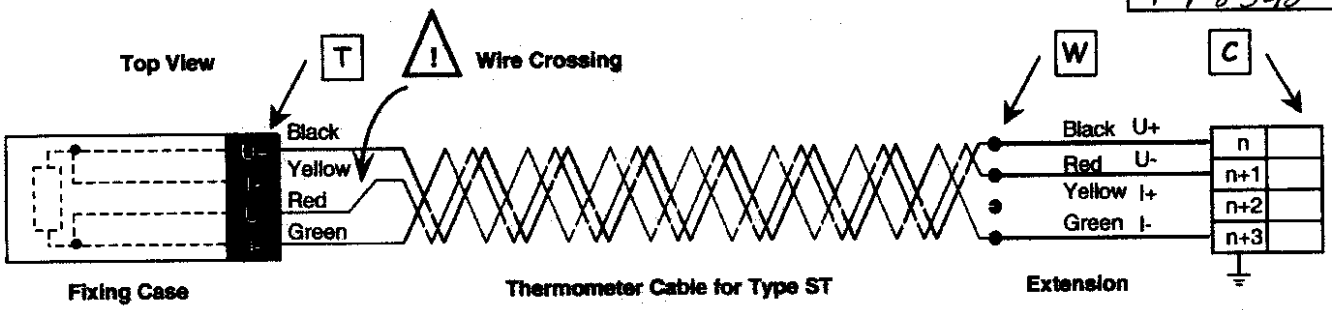

Fixing Case

Thread ☐
Hole ☐
Stud ☐

Thermometer Cable for Type ST

ρ (300 K) = 0.32 Ohm/m
Copper AWG 30
Length = ☐ m

Extension

ρ (300 K) = 0.07 Ohm/m
Copper AWG 24
Length: 0.8 m

CHECKS

Intervention	Date/ DD-MMM-YYYY	Check Point	R(U+,U-,I+,I-) [Ohm] 4W	R(U-,I-) [Ohm] 2W	R(U+,I+) [Ohm] 2W	R(U+,GND) [Ohm] 2W	Temperature [K]	Firm/Laboratory	Checked by
Calibration	*07-May-2001*	T	*60.00*	*0.18*	*0.18*	*OVL*	*Ambient*	*IPN*	*Joly*
Expedition	*15-Oct-2002*	T	*59.49*	*0.18*	*0.18*	*OVL*	*295*	*CERN*	*Vauthier*
Reception		T W C	59.054				79°	Fermi	LSA
		T W C							
		T W C							
		T W C							
		T W C							
		T W C							
		T W C							
		T W C							
		T W C							
		T W C							
		T W C							
		T W C							
		T W C							
		T W C							
		T W C							
		T W C							
		T W C							
		T W C							
		T W C							
		T W C							
		T W C							
		T W C							
		T W C							
		T W C							

Cryogenic Thermometer Traveller

DESCRIPTION

Part description:	Cryogenic thermometer	**Top Assembly Identification:**	LQXB Q6-1 Q2A Inst. Bus Side
Part Identification:	HCQITESCXT-CR000860		
Serial Number:	CX_LS_X13878	**Manufactured By:**	

CABLING

Connector Tag Name TT8312

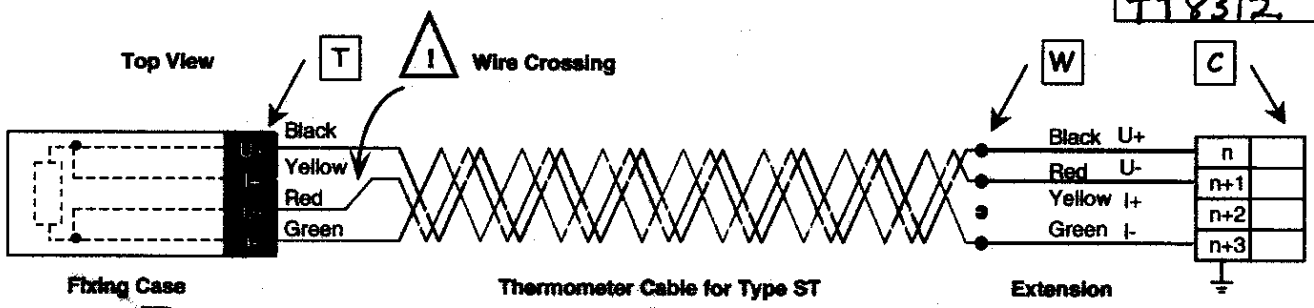

Fixing Case
Thread ☐
Hole ☐
Stud ☐

Thermometer Cable for Type ST
ρ (300 K) = 0.32 Ohm/m
Copper AWG 30
Length = ☐ m

Extension
ρ (300 K) = 0.07 Ohm/m
Copper AWG 24
Length: 0.8 m

CHECKS

Intervention	Date/ DD-MMM-YYYY	Check Point	R(U+,U-,I+,I-) [Ohm] 4W	R(U-,I-) [Ohm] 2W	R(U+,I+) [Ohm] 2W	R(U+,GND) [Ohm] 2W	Temperature [K]	Firm/Laboratory	Checked by
Calibration	*07-May-2001*	T	*57.50*	*0.18*	*0.18*	*OVL*	*Ambient*	*IPN*	*Joly*
Expedition	*15-Oct-2002*	T	*56.86*	*0.18*	*0.18*	*OVL*	*295*	*CERN*	*Vauthier*
Reception	7-15-05	T W C	56.537				79°	Fermi	L.SA
		T W C							
		T W C							
		T W C							
		T W C							
		T W C							
		T W C							
		T W C							
		T W C							
		T W C							
		T W C							
		T W C							
		T W C							
		T W C							
		T W C							
		T W C							
		T W C							
		T W C							
		T W C							
		T W C							
		T W C							
		T W C							
		T W C							
		T W C							

Cryogenic Thermometer Traveller

DESCRIPTION

Part description:	Cryogenic thermometer	**Top Assembly Identification:**	LQXB - Ø6 - 1 Q2A NON - Bus side
Part Identification:	HCQITESCXT-CR000880		
Serial Number:	CX_LS_X13881	**Manufactured By:**	

CABLING

Connector Tag Name FT 8322

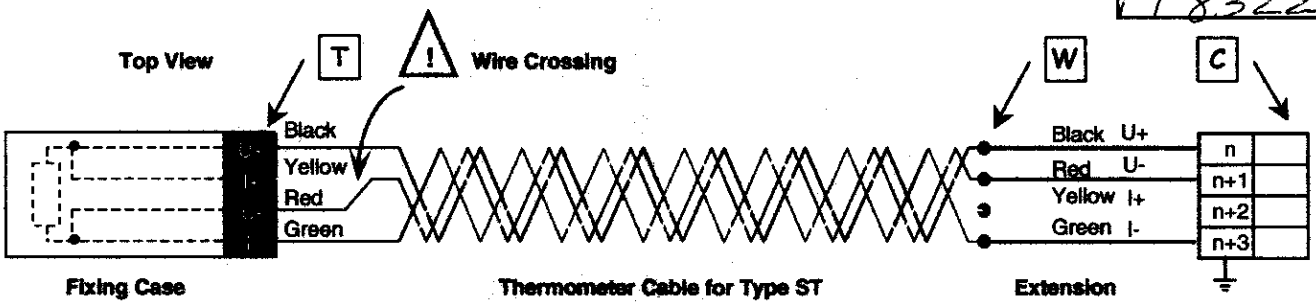

Fixing Case
- Thread ☐
- Hole ☐
- Stud ☐

Thermometer Cable for Type ST
ρ (300 K) = 0.32 Ohm/m
Copper AWG 30
Length = ☐ m

Extension
ρ (300 K) = 0.07 Ohm/m
Copper AWG 24
Length: 0.8 m

CHECKS

Intervention	Date/ DD-MMM-YYYY	Check Point	R(U+,U-,I+,I-) [Ohm] 4W	R(U-,I-) [Ohm] 2W	R(U+,I+) [Ohm] 2W	R(U+,GND) [Ohm] 2W	Temperature [K]	Firm/Laboratory	Checked by
Calibration	*07-May-2001*	T	*57.1*	*0.18*	*0.18*	*OVL*	*Ambient*	*IPN*	*Joly*
Expedition	*15-Oct-2002*	T	*56.48*	*0.18*	*0.18*	*OVL*	*295*	*CERN*	*Vauthier*
Reception	7-15-05	T W C	56.313				79°	Fermi	LSA
		T W C							
		T W C							
		T W C							
		T W C							
		T W C							
		T W C							
		T W C							
		T W C							
		T W C							
		T W C							
		T W C							
		T W C							
		T W C							
		T W C							
		T W C							
		T W C							
		T W C							
		T W C							
		T W C							
		T W C							
		T W C							
		T W C							
		T W C							
		T W C							

Traveler Title:	Specification No:	Revision:	DR No:
LHC Q2 LQXB Cryostat Shipping Traveler	333732	B	4231

Step No:	Drawing No:	Routing Form No:	Serial No:	Rework ID:
7.0	ME-390710		LQXB06	0

Discrepancy Description:

An open strip heater was found on the Q2A cold mass. It is on the non-lead end of MQXB07 and between quadrants 1-4. The heater strip is completely torn off on the quadrant 4 side on the jumper.

Originator: Steve Gould

Date: 4/20/2005

Cause of Nonconformance:

Thermal cycling during a firing of the heater caused the end of the heater strip to detach at a point where it had been weakened by folding.

Responsible Authority: Andy Hocker

Date: 4/21/2005

Disposition:

The G-10 collet surrounding the heater strip will be hollowed out, exposing unfolded bare sections of heater strip for quadrants 1 and 4 to which a new jumper wire will be soldered. Excess heater strip will be cut off and the hollowed-out sections will be filled with green putty. All subsequent 5 kV heater hipots for this magnet should be limited to 2 kV. (Re-issue Yoke & Skinning - 333497, Final Cold Mass Assembly - 333498, Q2 Module Assembly - 333643 and Q2 Cryostat Final Assembly - 333644. - John Szostak 4/21/05) The following was added on 6/21/05 by Rodger Bossert: Subsequently, the heater in question shorted to ground within the magnet. The shorted leg of the heater should be removed from the system (jumpered), grounded, and replaced with another single strip. This strip will be cut from a full length, regular quench heater and inserted into a full length G-11 tube (identical, except in length, to the Q1/Q3 instrumentation tube assemblies). The tube will be inserted into one of the rectangular holes in the yoke. Two inches are to be cut from each end of the replacement strip, and a 20 ga. wire is to be soldered longitudinally to the remainder of the exposed copper pad at each end as in sketch #1. Slide a G-11 protective cover assembly over the end, with the slot over the strip heater and the 20 ga wire through the hole as shown in sketch #2. Pack the slots on both ends with green putty, but not the hole. The G-11 tube should be terminated at the outside surface of the end plate on each end, with each end inserted into a stainless sleeve that has been welded to the end plate (the same way it is done on Q1's and Q3's). Glue the G-11 tube into the stainless sleeve on the non-lead end and let it freely slide within the sleeve on the lead end. The exterior end of the G-11 protective cover should be positioned longitudinally about one inch inside the exterior surface of the end plate on the lead end. The wire from the strip can then be attached to the instrumentation bundle as it exits the end plate. Make sure there is enough slack in the wire for thermal expansion. On the non-

Responsible Authority: Andy Hocker

Date: 4/21/2005

Corrective Action to Prevent Recurrence:

All heater strip connections made subsequent to the discovery of this failure mode were/will be fashioned according to the above disposition, as well as the remaining three heater strip connections on MQXB07.
Disposition verify notes: (TRR No. 1708)

Responsible Authority: Andy Hocker

Date: 4/21/2005

Corrective Action/Disposition Verified By: John Szostak

Date: 7/27/2005 10:48:33 AM

Will Configuration be affected?: ☐ YES ☑ NO

Identified problem area:

☐ Material ☐ Manpower ☑ Method ☐ Machine ☐ Measurement

Reviewed By: Bob Jensen

Date: 8/2/2005

Traveler Title:	Specification No:	Revision:	DR No:
Q2 LQXB Cryostat Final Assembly Traveler	5520-TR-333644	F	4283

Step No:	Drawing No:	Routing Form No:	Serial No:	Rework ID:
5.11	333644	N/A	LQXB06	1

Discrepancy Description:

During the welding of the heat exchanger extension pipe the gap and weld prep between the pipes was questioned and determined to be insufficient. Approximately 5 inches of weld has been applied.

Originator: Jim Rife

Date: 8/19/2005 1:48:00 PM

Cause of Nonconformance:

Tubes did not have proper weld prep. The backing strips moved during tack welding and the tubes butted together.

Responsible Authority: Thomas Page

Date: 8/19/2005 2:14:46 PM

Disposition:

Unweld the heat exchanger tube sections. Add a beveled weld prep to the ends of the tube sections to be welded together. Tack weld the backing strips in place to prevent movement when tacking the tube sections together.

Responsible Authority: Thomas Page

Date: 8/19/2005 2:14:46 PM

Corrective Action to Prevent Recurrence:

Prior to assembling the tube sections on a Q2 rebuild, ensure the weld prep is on the tubes. If there is no weld prep, add a weld prep to the tubes. Also, tack weld the backing strips in place prior to tack welding the tubes. Add these steps to the rebuild travelers.
Closeout notes: TRR1799 Bob Jensen 1/11/06

Responsible Authority: Thomas Page

Date: 8/19/2005 2:14:46 PM

Corrective Action/Disposition Verified By: Jim Rife

Date: 11/9/2005 10:15:19 AM

Will Configuration be affected?: ☐ YES ☑ NO

Identified problem area:

☐ Material ☐ Manpower ☑ Method ☐ Machine ☐ Measurement

Reviewed By: Bob Jensen

Date: 1/11/2006 3:18:10 PM

Revision Request Control Number: 1799

Specification Number: 5520 - TR - 333644 Current Revision: H

Traveler or Document Title Q2 LQXB Cryostat Final Assembly Traveler

Step #/Description of Revision:

Prior to assembling the tube sections on a Q2 rebuild, ensure the weld prep is on the tubes. If there is no weld prep, add a weld prep to the tubes. Also, tack weld the backing strips in place prior to tack welding the tubes. Add these steps to the rebuild travelers.

Bob Jensen	Bob Jensen	1/11/2006
Originator	Responsible Authority	Date
Revision Incorporated into the Traveler:		
	Revision Incorporated By	Date
Process Engineering Final Review:		
	Process Engineering/Designee	Date

Instructions for the completion of the Revision Request Form

Note(s):

Multiple steps may be effected by one Revision Request Form but only one specific Traveler or Document may be effected by each Revision Request Form.

If completing this form by hand, a Revision Request Control Number must be obtained before processing.

If completing this form entirely by electronic means, the printed copy to be filed in the Process Engineering Office is to be initialed by the individual incorporating the Revision Request and the individual who reviewed the Traveler or Document.

Originator Instructions:

1) Specification Number: - Enter the Specification Number of the Traveler or Document to be revised. (Document title is inserted automatically from the spec. #)

2) Current Revision: - Enter the Revision of the Traveler or Document to be revised.

3) Step# / Description of the Revision: - Enter a description of the revision to be made and the step# it applies to, if applicable. If needed to describe the revision attach a copy of the page(s). If the revision is coming from a related document such as a Discrepancy Report or an Engineering Order attach a copy of that document to the Revision Request Form.

4) Originator: - Originator is the person generating the form. (Select Name from List)

5) Responsible Authority: - Responsible Authority is person responsible for the process in question. (Select Name from List)

Process Engineering Office Instructions:

1) Revision Incorporated into the Traveler: - Signature of the individual who incorporated the revision.

2) Process Engineering Final Review: - Review the Traveler or Document revised, sign and date the form. The original completed Revision Request Form will be retained by the Process Engineering Office in the Revision Request Binder.

Revision Request Control Number: 1749

Specification Number: 5520 - TR - 333644 Current Revision: G

Traveler or Document Title Q2 LQXB Cryostat Final Assembly Traveler

Step #/Description of Revision:

4.3 Modified Step. Changed to "Install the "Top" Suspension System Adjusting Screws (MB-390039) and the "Bottom" (C936 Bearing Bronze) Suspension System Adjusting Screws (MB-390878), M16 Screw and washer into the Vacuum Vessel to hold the Fixed Support Assembly in place. Coat all screw threads with Molybdenum disulfide prior to installation." Per DR No. 4214.

4.17 Modified Step. Changed to "Establish alignment between the Cold Mass and the Support system per Q2 Cryostat Assembly Internal Piping (ME-390208)." per LQXB09.

7.11 Modified Step. Changed to "At the Q2a end, measure and mark 1m 411.8 mm [55.58 in.] of the lead as per Q2 Module Assembly Q2a Lead End (ME-369895, sheet 3 of 4). Have Crew Chief verify the length and sign below." Per DR No. 4165

7.12 Added Step. "At the Q2a end, measure 1m 411.8 mm [55.58 in.] and cut the lead at the mark as per Q2 Module Assembly Q2a Lead End (ME-369895, sheet 3 of 4). Have a Weldor fuse the ends of the Superconducting Cable before shipping Magnet." Per DR No. 4165

7.13 Modified Step. Changed to "At the Q2b end, measure and mark 511.8 mm [20.15 in.] of the lead as per Q2 Module Assembly Q2b Lead End Details (ME-369895, sheet 2 of 4). Have Crew Chief verify the length and sign below." Per DR No. 4165

7.14 Added Step. "At the Q2b end, measure 511.8 mm [20.15 in.] and cut the lead at the mark as per Q2 Module Assembly Q2b Lead End Details (ME-369895, sheet 2 of 4). Have a Weldor fuse the ends of the Superconducting Cable before shipping Magnet." Per DR No. 4165.

8.0 Modified Steps. Added Step Numbers and instructions to each individual signoff.

8.2 Modified Step. Changed Table per LQXB09. (New Step 8.13).

John Szostak	Jim Rife	6/14/2005
Originator	Responsible Authority	Date
Revision Incorporated into the Traveler:	John Szostak	10/24/2005
	Revision Incorporated By	Date
Process Engineering Final Review:	Bob Jensen	10/24/2005
	Process Engineering/Designee	Date

Instructions for the completion of the Revision Request Form

Note(s):

Multiple steps may be effected by one Revision Request Form but only one specific Traveler or Document may be effected by each Revision Request Form.

If completing this form by hand, a Revision Request Control Number must be obtained before processing.

If completing this form entirely by electronic means, the printed copy to be filed in the Process Engineering Office is to be initialed by the individual incorporating the Revision Request and the individual who reviewed the Traveler or Document.

Originator Instructions:

1) Specification Number: - Enter the Specification Number of the Traveler or Document to be revised. (Document title is inserted automatically from the spec. #)

2) Current Revision: - Enter the Revision of the Traveler or Document to be revised.

3) Step# / Description of the Revision: - Enter a description of the revision to be made and the step# it applies to, if applicable. If needed to describe the revision attach a copy of the page(s). If the revision is coming from a related document such as a Discrepancy Report or an Engineering Order attach a copy of that document to the Revision Request Form.

4) Originator: - Originator is the person generating the form. (Select Name from List)

5) Responsible Authority: - Responsible Authority is person responsible for the process in question. (Select Name from List)

Process Engineering Office Instructions:

1) Revision Incorporated into the Traveler: - Signature of the individual who incorporated the revision.

2) Process Engineering Final Review: - Review the Traveler or Document revised, sign and date the form. The original completed Revision Request Form will be retained by the Process Engineering Office in the Revision Request Binder.

Document ID: 7828

Q2 LQXB Cryostat Final Assembly Traveler

333644 / Rev. F

Job No:	**248**
E + F Project/Task No.:	**300/1.1.1.6.2**
M + S Project/Task No.:	**300/1.1.1.6.2**

Place This Side Down For Scanning!!!

LQXB06-1

Document ID:

7828

Job No.:

248

Project/Task No.

300/1.1.1.6.2

Series:

LQXB

Serial No:

LQXB06

Rework ID:

1

Specification No.:

333644

Revision:

F

LQXB06-1

Fermi National Accelerator Laboratory
Batavia, IL 60510

LARGE HADRON COLLIDER
Q2-LQXB
CRYOSTAT FINAL ASSEMBLY TRAVELER

Reference Drawing(s):
Vacuum Vessel and Cryostat Assembly
(ME-390206)

Project/Task Number: *300/1.1.1.6.2*

Released By: *John Szostak* | **Magnet/Device Series:** *LQXB*

Date Issued: *4/21/2005 6:04:04 PM* | **Scanned Pages:** 65

Prepared by: J. Szostak

Title	Signature	Date
TD / E&F Process Engineering	*Jamie Blowers* Bob Jensen / Designee	2/28/05
TD / LHC Production Supervisor	*Jim Rife* Jim Rife / Designee	2/28/05
TD / LHC Production Engineer	*Rodger Bossert* Rodger Bossert / Designee	2/28/05
TD / LHC Production Engineer Cryostat	*Tom Page* Tom Page / Designee	2/28/05
TD / LHC Project Engineer Cryostat	*Tom Nicol* Tom Nicol / Designee	2/28/05
TD / LHC Program Manager	*Jim Kerby* Jim Kerby / Designee	2/28/05

Revision Page (1 of 4)

Revision	Step No.	Revision Description	TRR No.	Date
None	N/A	Initial Release	N/A	6/17/02
A	3.1	Removed Step. Not necessary.	1485	10/2/02
	3.2	Modified Step. Changed to "Add Insertion Rails per Vacuum Vessel Assembly (ME-390129)."		
	4.1	Modified Step. Added "Suspension System Adjusting Screw, M16 x 70mm SHCS and Washer" to the Parts table.		
	4.3	Modified step. "Install the Suspension System Adjusting Screws (MB-390039), M16 Screw and washer into the Vacuum Vessel to hold the Fixed Support Assembly in place. Coat all screw heads with Molybdenum disulfide prior to installation."		
	4.6	Modified step. "Install the Suspension System Adjusting Screws (MB-390039), M16 Screw and washer into the Vacuum Vessel to hold the Sliding Support Assemblies in place. Coat all screw heads with Molybdenum disulfide prior to installation."		
	4.11	Modified Step. "Slide the Suspension System over the Cold Mass and place on tooling. The Suspension system may be disassembled during this step. Record shim sizes and locations prior to disassembly." New Step 4.13.		
	5.1	Added Step. "Place the Cold mass assembly on the insertion rail system."		
	5.3	Added Step. "Install Cold mass Insulation per Cold mass Insulation Installation (ME-390302)."		
	5.5	Added Step. "Using Pipe Supports as a template, cut the blankets around the Pipe Support Feet and slit blankets circumferentially at the Pipe Supports."		
	5.6	Added Step. "Remove Pipe Supports and blankets. Wrap blankets in plastic bag to keep clean for later use. Label blankets as they are removed for later positioning."		
	5.7	Added Step. "Install Pipe Supports to same location as in step 5.4."		
	5.16	Added Step. "Weld the Pipe Support Gussets to the Cold mass per Q2 Piping Assembly (ME-390208)."		
	6.0	Modified Steps per Tom Page.		
	7.1	Modified Steps per Tom Page.		
	7.2	Modified Steps per Tom Page.		
	7.3	Modified Steps per Tom Page.		
	7.4	Modified Steps per Tom Page.		
	7.5	Modified Steps per Tom Page.		
B	4.1	Modified Step. Changed to "Label the IP End and the Non-IP End of the Vacuum Vessel with a temporary sticker or equivalent." per Jim Rife.	1539	12/16/04
	5.0	Added Note "**Note(s): Do not use a strap wrench on the pipes.**" per **DR No. HGQ-0394.**		

Revision Page (2 of 4)

Revision	Step No.	Revision Description	TRR No.	Date
C	3.2	Added Step. "Inspect the transition area between the support sections and tube sections. Grind smooth if necessary."	1570	11/18/03
	3.3	Added Step. "Clean the Vacuum Vessel using a vacuum cleaner or equivalent."		
	3.8	Modified Step. Added "Tap out holes with M10 – 1.5 Tap. Move Vessel to Table."		
	4.9	Added Step. "Measure the distance between the Suspension Rings at the bottom of the Threaded Rods. Install Threaded Rods after measurements."		
	4.10	Modified Step. Moved "Configure the Suspension Tooling for Q2 Assembly per (ME-364604). Place Suspension Assembly on the tooling and make necessary adjusts to the tooling." to New step 4.11.		
	4.16	Modified Step. Added "Install shims between the Brass Slide Bars and the Stainless Steel Blocks on each support as needed. Record Shim size and location below." New Step 4.17.		
	5.0	Modified, rearranged and added steps from step 5.13 to 5.35, per Notes taken by Steve Gould and Tom Page on LQXB02.		
	5.8	Added Step. "Install Q2 Installation Tie Rod Assembly (MC-390635) and Tie Bar Retaining Clamp (MB-390136) as per Q2 Cryostat Assembly - Internal Piping (ME-390208)." per traveler LQXB03-0.		
	5.18	Modified Step. Changed Quantity from 2 ea to 4 ea. "...Pumping Line Pipe Stop (MB-390149), (4 ea.) and Cool Down Line Pipe Stop (MB-390150) (4 ea.)."		
	5.19	Modified Step. Changed Quantity from 2 ea to 4 ea. "...Pumping Line Pipe Stop (MB-390149), (4 ea.) and Cool Down Line Pipe Stop (MB-390150) (4 ea.)."		
	5.20	Modified Step. Changed Technician Signoff to Weldor Signoff.		
	5.21	Modified Step. Changed to "Clean the following parts fromQ2 Heat Exchanger Corrugated Tube Assembly (ME-390143)." Added Table. New step 5.35.		
	5.22	Modified Step. Moved to after Suspension System Adjusting Screws are installed. New Step 7.7		
	5.23	Modified Step. Moved to after Suspension System Adjusting Screws are installed. New Step 7.8		
	6.1	Moved Step. Moved to New Step 6.2. "Install the Cold mass MLI Blankets per (ME-390302) and in the same position as Step 5.6." Cannot Lift Cold Mass with Blankets installed.		
	6.2	Moved Step. Moved to New Step 6.1. "Lift the Cold Mass Assembly and place the Center Section (ME-390164) and End Sections (ME-390162) on the Insertion Rails. Lower the Cold mass back onto the rails ensuring the holes in the Shield Sections line up with Support Rollers."		
	7.8	Removed Step. " Install the Conflat flanges with copper gaskets on the Vacuum Vessel as per the General Assembly (ME-390000)." Conflat Flanges installed in IB#1.		

Revision Page (3 of 4)

Revision	Step No.	Revision Description	TRR No.	Date
D	Cover Page	Modified. Added signoff for Rodger Bossert for Final Electrical Steps in traveler.	1586	2/2/04
	3.1	Added Step. "Record the Vacuum Vessel Serial Number." per Jim Rife.		
	4.9	Modified Step. Moved to after Leak Checks. (New Step 5.34)		
	4.11	Modified Step. Changed ½" to 2" per Steve Gould.		
	5.8	Added Step. "Install Q2 Installation Tie Rod Assembly (MC-390635) and Tie Bar Retaining Clamp (MB-390136) as per Q2 Cryostat Assembly - Internal Piping (ME-390208)."		
	5.15	Modified Step. Changed to Technician Signoff.		
	5.21	Removed Step. "Re-install the Threaded Rods and lock into place." per TR-333644, LQXB04.		
	5.22	Removed Step. "Perform a Stretched Wire Measurement." per TR-333644, LQXB04.		
	5.23	Removed Step. "Insert the Q2 Pumping Line Tube (MB-390147) and Q2 Cool Down Line Tube (MB-390146)." Completed in step 5.10.		
	5.24	Removed Step. "Weld Pumping Line End Flange (MA-390032) to the Q2 Pumping Line Tube (MB-390147)." Completed in step 5.12.		
	5.25	Removed Step. "Weld Cool Down Line End Flange (MA-390033) to the Q2 Cool Down Line Tube (MB-390146)." Completed in step 5.12.		
	6.9	Modified Step. Added "Tap the PEM nuts prior to installing shield. Use care in tightening screws so they don't break." per DR No. **HGQ-0441**.		
	7.6	Modified Step. Added Note. "**Note(s): Ensure proper lubrication on adjusting screws. Check threads on screw and vacuum vessel prior to assembly and fix if necessary.**"		
	8.0	Added Step. Added Final Electrical Inspection per Jim Rife.		
E	1.4	Removed Step. "All personnel performing steps in this traveler must have documented training for this traveler and associated operating procedures."	1639	12/17/04
	3.2	Removed Step. "Add Insertion Rails per Vacuum Vessel Assembly (ME-390129)." Insertion rails no longer used.		
	5.14	Moved Step. "Weld the Retainer Clips (MA-390103) to the Cold Mass Outer Shell as per the Pipe Support Assembly (ME-390087) or (ME-390208)." New step 5.8 per Tom Page & Steve Gould.		
	5.29	Removed Step. "Measure the distance between the Suspension Rings at the bottom of the Threaded Rods. Install Threaded Rods (MC-390635 and MA-393227) after measurements." per Tom Page. Steps completed previously.		
	5.30	Removed Step. "Install bottom of shield (ME-390162, Qty 2) (ME-390163, Qty 2) (ME-390164)." per Tom Page.		
	5.31	Removed Step. "Install Center Retainers (MA-390086) before installing Support Bands (ME-390083). Install Aluminum Spacers (MA-390373) and screws to the End Sections before attaching the Support Bands." per Tom Page.		
	6.1	Added Step. "Tap the PEM nuts prior to installing shield. Use care in tightening screws so they don't break." Per Tom Page.		
	6.8	Modified Step. Added "The center blanket may need to be rotated 90 degrees. Tape the seams instead of using the Velcro, if necessary." **DR No. HGQ-0466.**		
	6.9	Modified Step. Moved "Tap the PEM nuts prior to installing shield. Use care in tightening screws so they don't break." to new step 6.1.		
	6.10	Modified Step. Moved to after step 5.20 per Steve Gould.		
	7.1	Modified Step. Changed "Green Putty" to "Pig Putty" per LQXB07.		
	8.0	Modified Step. Added new method of measuring Ls &Q per Rodger Bossert.		
	9.0	Added Step. "Final Preparations"		

Revision Page (4 of 4)

Revision	Step No.	Revision Description	TRR No.	Date
F	1.6	Added Step. "Protect the bellows during all stages of production." **DR No. HGQ-0500.**	1709	2/28/05
	3.4	Modified Step. Changed to "Attach Leak Check sticker for the Vacuum Vessel Assembly (ME-390003) per ES-107240." Per LQXB08.		
	4.15	Added Step. "If needed, perform a stretched wire measurement of the system, noting the relative position and roll of the three magnetic elements to each other. Perform Stretched Wire Measurement?" per LQXB08.		
	5.6	Added Step. "Starting from the North Side of IP (or East) End of Magnet, mark the East End of the 1st blanket "1E" (1 East) and "1W" (1 West) as per Figure 5.6-A below. Label the next blanket in this fashion, incrementing the numerical value for each blanket as per Figure 5.6-A. When all blankets are installed on Cold Mass, blanket designations should be placed near the "Top" of the North side of the magnet as per Figure 5.6-A." Per production request.		
	5.7	Modified Step. Removed "Label blankets as they are removed for later positioning." Per new Step 5.6.		
	5.22	Modified Step. Moved Step to before Step 5.21 (Pressure testing the Cold Mass) per LQXB08.		
	5.23	Modified Step. Moved Step to before Step 5.21 (Pressure testing the Cold Mass) per LQXB08.		
	5.24	Modified Step. Moved Step to before Step 5.21 (Pressure testing the Cold Mass) per LQXB08.		
	5.25	Added Step. "Install the Fiducial Mounting Blocks (MB-390809) per Q2 Cold Mass Welded Assembly (ME-390309)." per LHC Production Engineer.		
	5.26	Added Step. "Weld the Fiducial Mounting Blocks (MB-390809) per Q2 Cold Mass Welded Assembly (ME-390309)." per LHC Production Engineer.		
	5.27	Added Step. "Prepare Cold Mass Assembly for Pressure Test at 375 psi." per LHC Production Engineer.		
	5.28	Added Step. "Verify Cold Mass Assembly is ready for Pressure Test at 375 psi." per LHC Production Engineer.		
	5.30	Modified Step. Moved to before Assembling the Corrugated Tube Assembly. Per LQXB08. (New Step 7.7).		
	8.1	Modified Step. Reversed H_{pot} and L_{pot} Voltage Taps for Inductance and Q-factor, in table, to allow for correct values taken at Q2a end of Magnet. Per LQXB08.		
	9.4	Removed Step. "Install the Vinyl Flange Covers (MA-390491), (MA-390492), (MA-390493), (MA-390494), & the Alignment Fiducial Covers (MA-390495)." Moved to Shipping Traveler.		

Ensure appropriate memos and specific instructions are placed with the traveler before issuing the sub traveler binder to production.

1.0 General Notes

1.1 All steps that require a sign-off shall include the Technician/Inspectors first initial and full last name.

1.2 No erasures or white out will be permitted to any documentation. All incorrectly entered data shall be corrected by placing a single line through the error, initial and date the error before adding the correct data.

1.3 All Discrepancy Reports issued shall be recorded in the left margin next to the applicable step.

1.4 Personnel shall perform all tasks in accordance with current applicable ES&H guidelines and those specified within the step.

1.5 Cover the product/assembly with Green Herculite (Fermi stock 1740-0100) when not being serviced or assembled.

1.6 Protect the Bellows during all stages of production.

2.0 Parts Kit List

2.1 Attach the completed Parts Kit for this production operation to this traveler. Ensure that the serial number on the Parts Kit matches the serial number of this traveler. Verify that the Parts Kit received is complete.

J. Hostler
Process Engineering/Designee

8/10/05
Date

3.0 Vacuum Vessel Preparation and Painting

3.1 Record the Vacuum Vessel Serial Number.

Q2-8

Technician(s) Date 8/17/05

3.2 Inspect the transition area between the support sections and tube sections. Grind smooth if necessary.

Technician(s) Date 8/17/05

3.3 Clean the Vacuum Vessel using a vacuum cleaner or equivalent.

N/A

Technician(s) Date

3.4 Attach Leak Check sticker for the Vacuum Vessel Assembly (ME-390003) per ES-107240.

Part No.	DETERMINATION OF DETECTABLE LEAK						
	M.D.S. ÷ ((Response – Background) ÷ Leak value) = MDL						
OPERATOR'S LAST NAME	SCALE UNITS BEFORE HELIUM PROBE	SCALE UNITS WHILE ENCLOSURE FLOODING	MDS	Response	Background	Leak Value	MDL
						____ x E $^{-8}$	____ x E $^{-}$ ___

N/A

Technician(s) Date

3.5 Prepare the outside of the Vacuum Vessel (ME-390003) for painting by cleaning with Ethyl Alcohol (Fermi stock 1920-0550) and Kimwipes (Fermi stock 1660-2500) or equivalent.

N/A

Technician(s) Date

3.6 Mask the Stainless Steel Components of the Vacuum Vessel for painting.

N/A

Technician(s) Date

3.7 Prime the Vacuum Vessel using Rust-o-leum (Fermi stock 1825-4000).

N/A

Technician(s) _____ Date _____

3.8 Verify that the Screws (MA-393036) will thread easily into the appropriate holes in the Vacuum Vessel (ME-390126). If necessary, tap out holes with M10 – 1.5 Tap. Move Vessel to Table.

N/A

Lead Person _____ Date _____

3.9 Paint the Vacuum Vessel using Flambeau Red (Fermi stock 1825-3710).

Vacuum Vessel
(ME-390129)

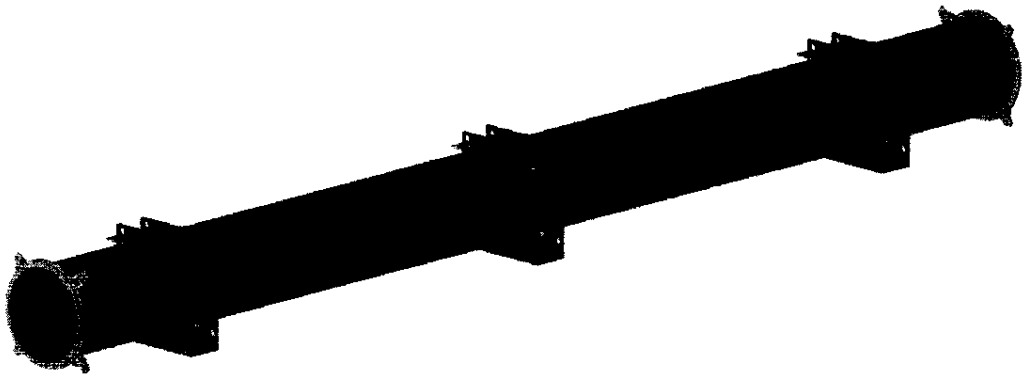

N/A

Technician(s) _____ Date _____

4.0 Suspension System

4.1 Clean the Suspension System with Ethyl Alcohol (Fermi stock 1920-0550) and Kimwipes (Fermi stock 1660-2500) or equivalent.

Part Name	Part Number	Quantity	Completed
Fixed Support Assembly	**(ME-390041)**	**1**	✓
Sliding Support Assembly	**(ME-390042)**	**2**	✓
Tie Bar Assembly	**(ME-390167)**	**4**	✓
Tie Bar Shim, .250"	**(ME-390118)**	**6**	✓
Tie Bar Shim, .093"	**(ME-390119)**	**6**	✓
Tie Bar Shim, .031"	**(ME-390120)**	**6**	✓
Suspension System Adjusting Screw	**(MB-390039)**	**12**	✓
M16 x 70mm SHCS	**(MA-393021)**	**12**	✓
Washer	**(MA-390377)**	**12**	✓

Label the IP End and the Non-IP End of the Vacuum Vessel with a temporary sticker or equivalent.

N/A
Technician(s) Date

4.2 Insert the Fixed Support Assembly (ME-390041) into the vacuum vessel and position at the center support.

N/A

Technician(s) Date

4.3 Install the Suspension System Adjusting Screws (MB-390039), M16 Screw and washer into the Vacuum Vessel to hold the Fixed Support Assembly in place. Coat all screw threads with Molybdenum disulfide prior to installation.

[redacted]

N/A

Technician(s) Date

4.4 Adjust the Vertical and rotational alignment of the Supports using the Suspension System Adjusting Screws (MB-390039). Ensure all four screws are in contact with the Support and that Diametrically Opposing Support Lugs are equidistant from the Vacuum Vessel Wall.

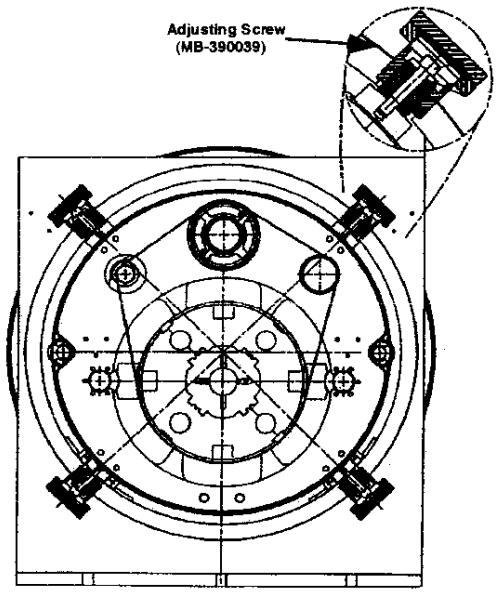

N/A

Technician(s) Date

4.5 Insert the Sliding Support Assemblies (ME-390042) in to the Vacuum Vessel and position at each of the outboard support sections.

N/A

Technician(s) Date

4.6 Install the Suspension System Adjusting Screws (MB-390039), M16 Screw and washer into the Vacuum Vessel to hold the Fixed Support Assembly in place. Coat all screw threads with Molybdenum disulfide prior to installation.

[redacted]

N/A

Technician(s) Date

4.7 Adjust the Vertical and rotational alignment of the Supports using the Suspension System Adjusting Screws (MB-390039). Ensure all four screws are in contact with the Support and that Diametrically Opposing Support Lugs are equidistant from the Vacuum Vessel Wall.

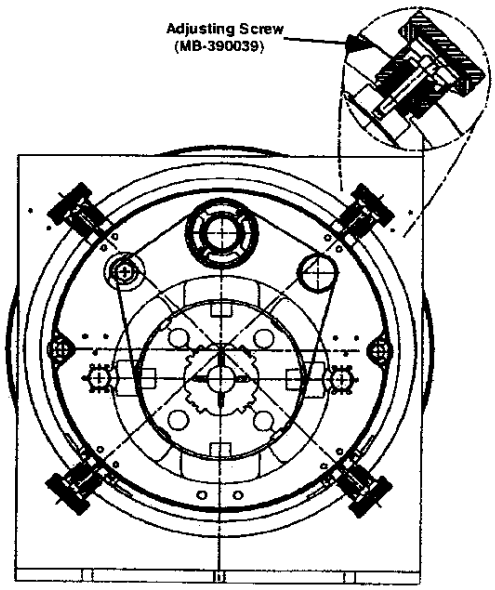

N/A

Technician(s) Date

4.8 Assemble the Suspension System using the Fixed Support Assembly (ME-390041), the Sliding Support Assemblies (ME-390042) and the Tie Bar Assemblies (MC-390167). Insert Tie Bar Shims (MC-390118),(MB-390119) and (MB-390120) between the Sliding Support Assemblies (ME-390042) and the Tie Bar Assemblies (MC-390167) as required. (Reference drawing: ME-390310)

N/A
Technician(s) _____ Date _____

4.9 Label the IP End Support and the Non-IP End Support. (Writing on the G-11 Support is acceptable).

N/A
Technician(s) _____ Date _____

4.10 Loosen each Suspension System Adjusting Screw (MB-390039) 2 turns and remove the Suspension System from the Vacuum Vessel.

N/A
Technician(s) _____ Date _____

4.11 Configure the Suspension Tooling for Q2 Assembly per (ME-364604). Place Suspension Assembly on the tooling and make necessary adjusts to the tooling.

N/A
Technician(s) _____ Date _____

4.12 Assemble the Outboard Suspension Mounting Brackets (MD-390280) to the Sliding Support Assemblies (outboard supports, ME-390042).

N/A
Technician(s) _____ Date _____

4.13 Assemble the Center Suspension Mounting Brackets (MD-390281) to the Sliding Fixed Assemblies (center support, ME-390041).

[illegible]
Technician(s) _____ Date 8/2/05

4.14 Slide the Suspension System over the Cold Mass and place on tooling. The Suspension system may be disassembled during this step. Record shim sizes and locations prior to disassembly.

Note(s):

Ensure that the Suspension System is configured properly to the Cold Mass with respect to the IP and Non-IP Ends.

Technician(s) _____ Date 8/2/05

4.15 If needed, perform a stretched wire measurement of the system, noting the relative position and roll of the three magnetic elements to each other.

Perform Stretched Wire Measurement?

Yes ☑

No ☐

STOP

5 Dim. 4

Responsible Authority/Physicist _____ Date 8/8/05

4.16 Verify locking collars exist only at center support.

STOP

Lead Person _____ Date 8/3/05

4.17 Establish alignment between the Cold Mass and the Support system. Install shims between the Brass Slide Bars and the Stainless Steel Blocks on each support as needed.

Record Shim size and location below.

East-North —	**East-South** —
Center-North .054	**Center-South** .054
West-North —	**West-South** —

Technician(s) _____ Date 8-3-05

4.18 Verify the Alignment of the Cold Mass and the Support System.

Crew Chief _____ Date 8/3/05

4.19 Weld the Cold Mass to the Outboard Cold Mass Brackets as per (ME-390310).

Weldor(s) _____ Date 8-3-05

5.0 Piping Assembly

Note(s):

Do not use a Strap Wrench on the Pipes.

5.1 Place the Cold Mass Assembly on the insertion rail system.

Technician(s) _____ Date 8-12-05

5.2 Clean the Pipe Supports with Ethyl Alcohol (Fermi stock 1920-0550) and Kimwipes (Fermi stock 1660-2500) or equivalent.

Technician(s) _____ Date 8-12-05

5.3 Install Cold mass Insulation per Cold mass Insulation Installation (ME-390302).

Technician(s) _____ Date 8-12-05

5.4 Install the Pipe Supports (MD-390258)(Qty. 4) on the Cold Mass per (ME-390208).

Note(s):

A Tie Bar may be disconnected, if necessary, from the Fixed Support Assembly to install the central two pipe supports.

PIPE SUPPORT ASSEMBLY

Technician(s) _____ Date 8-12-05

5.5 Using Pipe Supports as a template, cut the blankets around the Pipe Support Feet and slit blankets circumferentially at the Pipe Supports.

N/A

Technician(s) Date

5.6 Starting from the North Side of IP (or East) End of Magnet, mark the East End of the 1st blanket "1E" (1 East) and "1W" (1 West) as per Figure 5.6-A below. Label the next blanket in this fashion, incrementing the numerical value for each blanket as per Figure 5.6-A. When all blankets are installed on Cold Mass, blanket designations should be placed near the "Top" of the North side of the magnet as per Figure 5.6-A.

INSTALLING BLANKETS

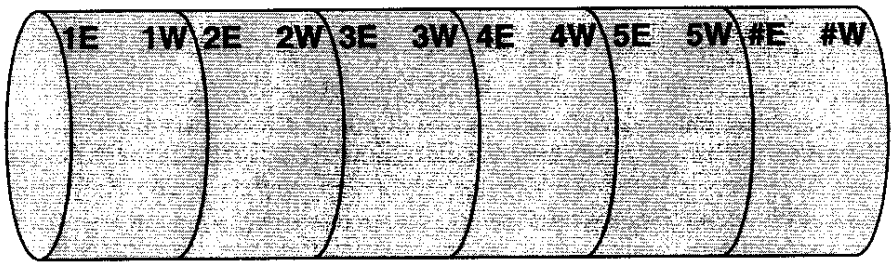

IP END **NON-IP END**

(View from "North" End of Magnet looking "South")

Figure 5.6-A

N/A

Technician(s) Date

5.7 Remove Pipe Supports and blankets. Wrap blankets in plastic bag to keep clean for later use.

N/A

Technician(s) Date

5.8 Install Pipe Supports to same location as in step 5.4.

N/A

Technician(s) Date

5.8 Weld the Retainer Clips (MA-390103) to the Cold Mass Outer Shell as per the Pipe Support Assembly (ME-390087) or (ME-390208).

N/A

Weldor(s) Date

X 5.9 Install Q2 Installation Tie Rod Assembly (MC-390635) and Tie Bar Retaining Clamp (MB-390136) as per Q2 Cryostat Assembly - Internal Piping (ME-390208).

Don Pinczyk 8/22/05

Technician(s) Date

5.10 Clean the Q2 Heat Exchanger Outer Shell (MD-390145), Q2 Pumping Line Tube (MB-390147) and the Q2 Cool Down Line Tube (MB-390146) with Ethyl Alcohol (Fermi stock 1920-0550) and Kimwipes (Fermi stock 1660-2500) or equivalent.

Technician(s) _____ Date 8/22/05

DR B4783

5.11 Slide the Q2 Heat Exchanger Outer Shell (MD-390145), Q2 Pumping Line Tube (MB-390147) and the Q2 Cool Down Line Tube (MB-390146) through all seven supports.

Note(s):

Ensure the cross over hole in the Heat Exchanger Pipe is lined up with the hole in the Cold Mass Center Tube.

Technician(s) _____ Date _____

5.12 Clean the Pumping Line Flanges (MB-390032), the Cool Down Line Flanges (MB-390033) and the Heat Exchanger Outer Shell Flanges (MB-390031) with Ethyl Alcohol (Fermi stock 1920-0550) and Kimwipes (Fermi stock 1660-2500) or equivalent.

Technician(s) _____ Date _____

5.13 Weld the Heat Exchanger Outer Shell Flanges (MB-390031), the Pumping Line Flanges (MB-390032) and the Cool Down Line Flanges (MB-390033) to the ends of the corresponding pipes.

Weldor(s) _____ Date 8/22/05

5.14 Clean the Cold Mass and the Retainer Clips (MA-390103) with Ethyl Alcohol (Fermi stock 1920-0550) and Kimwipes (Fermi stock 1660-2500) or equivalent.

Technician(s) N/A Date _____

5.15 Clean the Pipe Support Gussets with Ethyl Alcohol (Fermi stock 1920-0550) and Kimwipes (Fermi stock 1660-2500) or equivalent.

Technician(s) N/A Date _____

5.16 Weld the Pipe Support Gussets to the Cold mass per Q2 Piping Assembly (ME-390208).

Weldor(s) N/A Date _____

5.17 Clean the Heat Exchanger Connection (MC-390111) with Ethyl Alcohol (Fermi stock 1920-0550) and Kimwipes (Fermi stock 1660-2500) or equivalent.

Technician(s) _____ Date _____

5.18 Install the Connector (Heat Exchanger to Cold Mass) (MC-390111). Verify alignment and then purge Cold Mass and Q2 Heat Exchanger Outer Shell (MD-390145), with Argon Gas.

Technician(s) _____ Date 8-23-05

5.19 Weld the Connector (Heat Exchanger to Cold Mass) (MC-390111) to the Q2 Heat Exchanger Outer Shell (MD-390145) and to the Cold Mass Center Tube per (ME-390208, Section F-F).

Weldor(s) _____ Date 8/23/05

5.20 Insert 4.5k Intercept Line Pipes per (ME-390208).

Technician(s) _____ Date 8/25/05

5.21 Install the Tie Bar Retaining Clamps (Qty. 8)(MB-390136) per Q2 Internal Piping Assembly (ME-390208).

Technician(s) _____ Date 8-25-05

5.22 Clean the Pumping Line Pipe Stop (MB-390149), (4 ea.) and the Cool Down Line Pipe Stop (MB-390150) (4 ea.) with Ethyl Alcohol (Fermi stock 1920-0550) and Kimwipes (Fermi stock 1660-2500) or equivalent.

Technician(s) _____ Date 8-23-05

5.23 Weld the Pumping Line Pipe Stop (MB-390149), (4 ea.) and Cool Down Line Pipe Stop (MB-390150) (4 ea.) on the Pumping Line and Cool Down Lines.

Weldor(s) _____ Date 8/23/05

5.24 Weld the fixed collar to the 4.5k Intercept Line Tube (MB-390204) per (ME-390208).

Weldor(s) _____ Date 8/25/05

5.25 Install the Fiducial Mounting Blocks (MB-390809) per Q2 Cold Mass Welded Assembly (ME-390309).

Technician(s) _____ Date 8-24-05

5.26 Weld the Fiducial Mounting Blocks (MB-390809) per Q2 Cold Mass Welded Assembly (ME-390309).

Weldor(s) _____ Date 8/24/05

5.27 Prepare Cold Mass Assembly for Pressure Test at 375 psi.

E. Strupik
Technician(s)

8-24-05
Date

STOP

5.28 Verify Cold Mass Assembly is ready for Pressure Test at 375 psi.

T. Peterson
Responsible Authority/Physicist

8/24/05
Date

5.29 Pressure test the Cold Mass Assembly at 375 psi Nitrogen per Section 5034 of the Fermilab ES&H Manual and UG-100 of the Code.

Warning:

The test is to be performed after normal working hours and only personnel directly involved with the test will be present.

STOP

T. Peterson
Responsible Authority/Physicist

8/29/05
Date

5.30 Leak Check the Cold Mass Assembly. (This will include the Exchanger Outer Shell).

Part No.		DETERMINATION OF DETECTABLE LEAK						
PART NO. LQXB06-1		SCALE UNITS BEFORE HELIUM PROBE	SCALE UNITS WHILE ENCLOSURE FLOODING	DETERMINATION OF MINIMUM DETECTABLE LEAK				
DATE TIME	OPERATOR'S LAST NAME			MDS + ((Response - Bckgnd) ÷ Leak Value) = MDL				
9-9-05	D. GAW	3415	3415	10	3815	3415	0.85×10^{-8}	1.4×10^{-8}
10:10HRS	JARRIE WILSON							

Inspector

9/9/05
Date

5.31 Leak Check the Cool Down Line (MB-390146).

Part No. cool Down line tube	DETERMINATION OF DETECTABLE LEAK						
	M.D.S. ÷ ((Response – Background) ÷ Leak value) = MDL						
OPERATOR'S LAST NAME	SCALE UNITS BEFORE HELIUM PROBE	SCALE UNITS WHILE ENCLOSURE FLOODING	MDS	Response	Background	Leak Value	MDL
Wilson	20X1	20X1	2	55X5	20X1	3.91 xE-8	3.06 xE-10

Inspector

8-26-05
Date

5.32 Leak Check the Q2 Pumping Line Tube (MB-390147).

Part No. Pumping line tube	DETERMINATION OF DETECTABLE LEAK						
	M.D.S. ÷ ((Response – Background) ÷ Leak value) = MDL						
OPERATOR'S LAST NAME	SCALE UNITS BEFORE HELIUM PROBE	SCALE UNITS WHILE ENCLOSURE FLOODING	MDS	Response	Background	Leak Value	MDL
	20X1	20X1	2	55X5 ~~30X5~~	20X1	3.91 xE-8	3.06 xE-10

Inspector

8-26-05
Date

5.33 Leak check 4.5k Intercept Lines Tubes (MB-390204). this mag. has only 2 4.5K inter. lines ok per Simon + Tom P.

Part No. 4.5K inter. line #1	DETERMINATION OF DETECTABLE LEAK						
	M.D.S. ÷ ((Response – Background) ÷ Leak value) = MDL						
OPERATOR'S LAST NAME	SCALE UNITS BEFORE HELIUM PROBE	SCALE UNITS WHILE ENCLOSURE FLOODING	MDS	Response	Background	Leak Value	MDL
Wilson	12X1	12X1	2	56X5	12X1	3.91 xE-8	2.91 xE-10

PART NO. 4.5K inter. line #2		SCALE UNITS BEFORE HELIUM PROBE	SCALE UNITS WHILE ENCLOSURE FLOODING	DETERMINATION OF MINIMUM DETECTABLE LEAK				
DATE TIME	OPERATOR'S LAST NAME			MDS ÷ ((Response - Bckgnd) ÷ Leak Value) = MDL				
8/26/05	Wilson	22X1	22X1	2	54X5	22X1	3.91X10-8	3.12X10-10

8-26-05

6.0 Shield Assembly

6.1 Tap the PEM nuts prior to installing shield. Use care in tightening screws so they don't break.

Technician(s) _____ Date 9/~~10~~ 09/05

6.2 Lift the Cold Mass Assembly and place the Center Section (ME-390164) and End Sections (ME-390162) on the Insertion Rails. Lower the Cold mass back onto the rails ensuring the holes in the Shield Sections line up with Support Rollers.

Technician(s) _____ Date 9-10-05

6.3 Insert the Mid Sections (ME-390163) and the Support Bands (MD-390083).

Technician(s) _____ Date 9-10-05

6.4 Assemble the bottom half of the shield. Leave all bolts loose. Spray all screw threads with Molybdenum.

Lower Shield Section
(ME-390082)

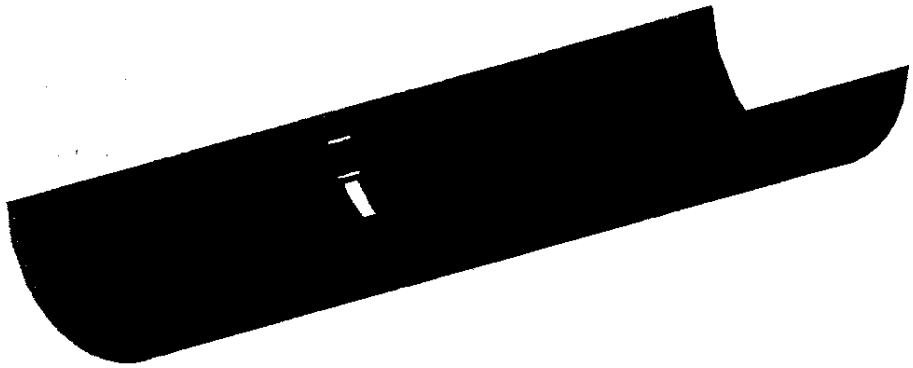

Technician(s) _____ Date 9-10-05

6.5 Assemble the Cooling Tubes (MD-390165) to the Bottom Half of the Shield.

Technician(s) _____ Date 9-10-05

6.6 Lift the Cold mass and place the Shield Inner and Outer MLI Blankets (ME-390313 & ME-390314) onto the insertion Rails in the correct orientation.

Note(s):

Place the Outer Blanket (ME-390314) on the Rails first.

Technician(s) _____ Date 9-12-05

6.7 Lower the Cold mass onto the rails. Ensure the slits in the blankets line up with Support Rollers.

Technician(s) _____ Date 9-12-05

6.8 Install the Cold Mass MLI Blankets per (ME-390302) and in the same position as Step 5.6. The center blanket may need to be rotated 90°. Tape the seams instead of using the Velcro, if necessary.

Technician(s) _____ Date 9-12-05

6.9 Cut and install the pipe MLI blankets per Q2 Piping Insulation (ME-390306).

Technician(s) _____ Date 9-12-05

6.10 Install the Upper Shield per Q2 Thermal Shield Assembly (ME-390161). Spray all screw threads with Molybdenum.

Technician(s) _____ Date 9-12-05

6.11 Install the Shield Blankets (ME-390313 & ME-390314). Cutouts will have to be made for the Upper Support Lugs.

Technician(s) _____ Date 9-12-05

7.0 Cold Mass Insertion into the Vacuum Vessel

7.1 Install Pig Putty between the Vacuum Vessel and the Insertion Rails.

Technician(s) _____ Date 9/13/05

7.2 Install the Cold Mass/Pull-in Tooling.

Technician(s) _____ Date 9/13/05

7.3 Mount the Pneumatic Winch to floor on the West side of the Vacuum Vessel.

Technician(s) _____ Date 9-13-05

7.4 Connect the cable to the Pull-in Tooling.

Technician(s) _____ Date 9-13-05

7.5 Pull the Cold mass Assembly into the Vacuum Vessel.

Technician(s) _____ Date 9-13-05

7.6 When the Cold Mass is fully inserted, install the Suspension System Adjusting Screws (MB-390039).

Note(s):

Ensure proper lubrication on adjusting screws. Check threads on screw and vacuum vessel prior to assembly and fix if necessary.

Technician(s) _____ Date 9-14-05

7.7 Clean the following parts fromQ2 Heat Exchanger Corrugated Tube Assembly (ME-390143).

Part Name	Part Number	Quantity	Completed
Corrugated Tube Weldment	**(ME-390394)**	**1**	✓
Corrugated Tube Support	**(MB-390028)**	**8**	✓
Corrugated Tube Restrictor	**(ME-390029)**	**2**	✓

Technician(s) _____ Date 9-14-05

7.8 Assemble Corrugated Tube Supports (MB-390028) and Restrictors (MB-390029) to the Heat Exchanger Corrugated Tube per (ME-390143).

Technician(s) _____ Date 9-14-05

7.9 Slide the Corrugated Tube Assembly (ME-390143) into the Heat Exchanger Outer Shell per (ME-390142).

Technician(s) _____ Date 9-14-05

7.10 Adjust the Suspension System Adjusting Screw (MB-390039) as needed to center the Cold Mass in the Vacuum Vessel.

Technician(s) _____ Date 9-14-05

7.11 At the **Q2a** end, measure 1m 411.8 mm [55.58 in.] and cut the lead as per Q2 Module Assembly Q2a Lead End (ME-369895, sheet 3 of 4). Have a Weldor fuse the ends of the Superconducting Cable before shipping Magnet.

Technician(s) N/A _____ Date _____

Weldor(s) N/A _____ Date _____

7.12 At the **Q2b** end, measure 511.8 mm [20.15 in.] and cut the lead as per Q2 Module Assembly Q2b Lead End Details (ME-369895, sheet 2 of 4). Have a Weldor fuse the ends of the Superconducting Cable before shipping Magnet.

Technician(s) N/A _____ Date _____

Weldor(s) N/A _____ Date _____

8.0 Electrical Inspection

8.1 Perform an electrical inspection on each of the Individual Quadrants and the Cold Masses. Refer to the Valhalla and Leader Free Standing Coil Measurement Procedure (ES-292306).

To measure the resistance of a bussed Q2:

1. Use Valhalla Scientific 4300B digital micro-ohmmeter.
2. Set Test Current to 1 amp.
3. Set Scale to 2V full scale.
4. Turn temperature compensation on.
5. Turn test current off.
6. Put jumper between Q2a Q3 inner power lead and 5 KA bus as shown in figure.
7. Connect I_{HI} to the 5KA bus (Q2a Q3 inner power lead) as shown in figure.
8. Connect I_{LO} to the Q2b Q3 inner power lead as shown in figure.
9. Turn test current on.
10. Connect V_{HI} and V_{LO} buttons to voltage taps as shown below.
11. Read resistance and record in traveler.

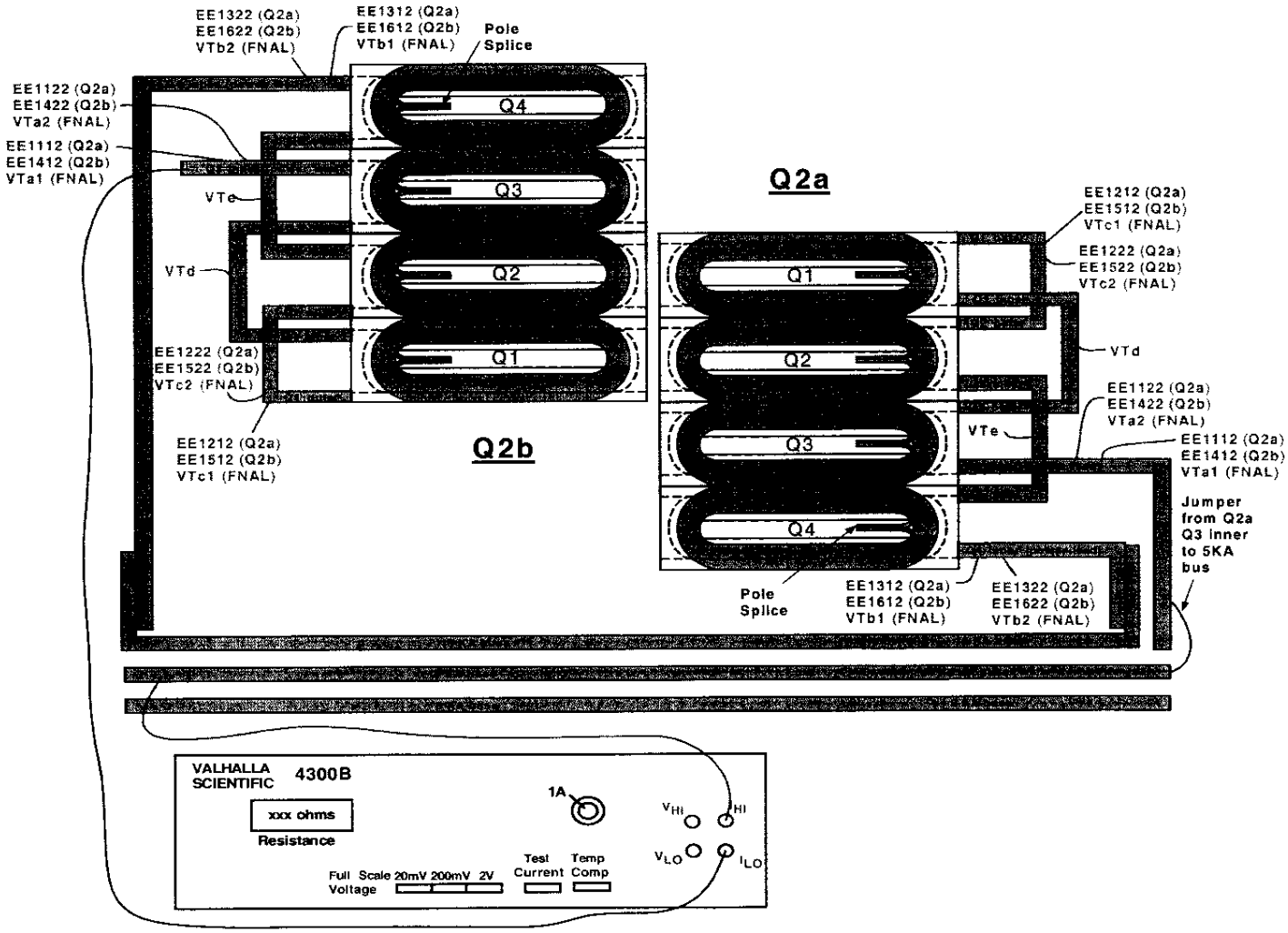

(Q2a) Resistance				Nominal ~ 560 to 585 mΩ
Voltage Tap Serial Numbers				Quadrant Total Resistance
Connect	Fermi	CERN	Quadrant	
V_{HI}	VTdQ2a	EMPTY	Quadrant 1	577.1 mΩ
V_{LO}	VTc1Q2a	EE1212		
V_{HI}	VTc1Q2a	EE1212	Quadrant 2	579.3 mΩ
V_{LO}	VTeQ2a	EMPTY		
V_{HI}	VTa1Q2a	EE1112	Quadrant 3	579.4 mΩ
V_{LO}	VTdQ2a	EMPTY		
V_{HI}	VTeQ2a	EMPTY	Quadrant 4	579.6 mΩ
V_{LO}	VTb1Q2a	EE1312		

Note: When Measuring Total Cold Mass, Set Test Current to 0.1 Amp				
V_{HI}	VTa1Q2a	EE1112	Total Cold Mass	Nominal ~ 2.305 Ω
V_{LO}	VTb1Q2a	EE1312		2.316 Ω

Technician(s) _____ Date 9-14-05

Check resistance of Redundant Voltage Taps.

Q2a Redundant Voltage Taps			
Connect	Fermi	CERN	Resistance
V_{HI}	VTa2Q2a	EE1122	1156.2 Ω
V_{LO}	VTc2Q2a	EE1222	
V_{HI}	VTc2Q2a	EE1222	1158.6 Ω
V_{LO}	VTb2Q2a	EE1322	

Technician(s) _____ Date 9-14-05

To measure Ls and Q of a Bussed Q2a:

1. Use Agilent 4263B LCR Meter.
2. Turn power on by pushing Line button. Wait 30 seconds until display screen is lit.
3. Recall program #1. To do this, push recall (Rcl), then push the #1, then push Enter.
4. Push Auto/Hold button to release hold.
5. Verify that the frequency displayed in the upper right corner of the display screen is 1000 Hz and the level recorded in the lower right corner of the display screen is 1V or 1000 mV.
6. Connect jumper between Q2a/Quadrant 3 inner power lead and 5KA bus as shown in figure.
7. Connect H_{cur} to Q2b/Quadrant 3 inner power lead as shown in figure.
8. Connect L_{cur} to 5KA bus as shown in figure.
9. Connect H_{pot} and L_{pot} buttons to voltage taps as shown below.

To measure Q2a:

- To measure Q1, connect H_{pot} to VTc1 (EE1212 for Q2a), and L_{pot} to VTd.
- To measure Q2, connect H_{pot} to VTe, and L_{pot} to VTc1 (EE1212 for Q2a).
- To measure Q3, connect H_{pot} to VTd and L_{pot} to VTa1 (EE1112 for Q2a).
- To measure Q4, connect H_{pot} to VTb1 (EE1312 for Q2a), and L_{pot} to VTe.
- To measure total, connect H_{pot} to VTb1 (EE1312 for Q2a), and L_{pot} to VTa1 (EE1112 for Q2a).

10. Read Ls and Q from display and record in traveler.

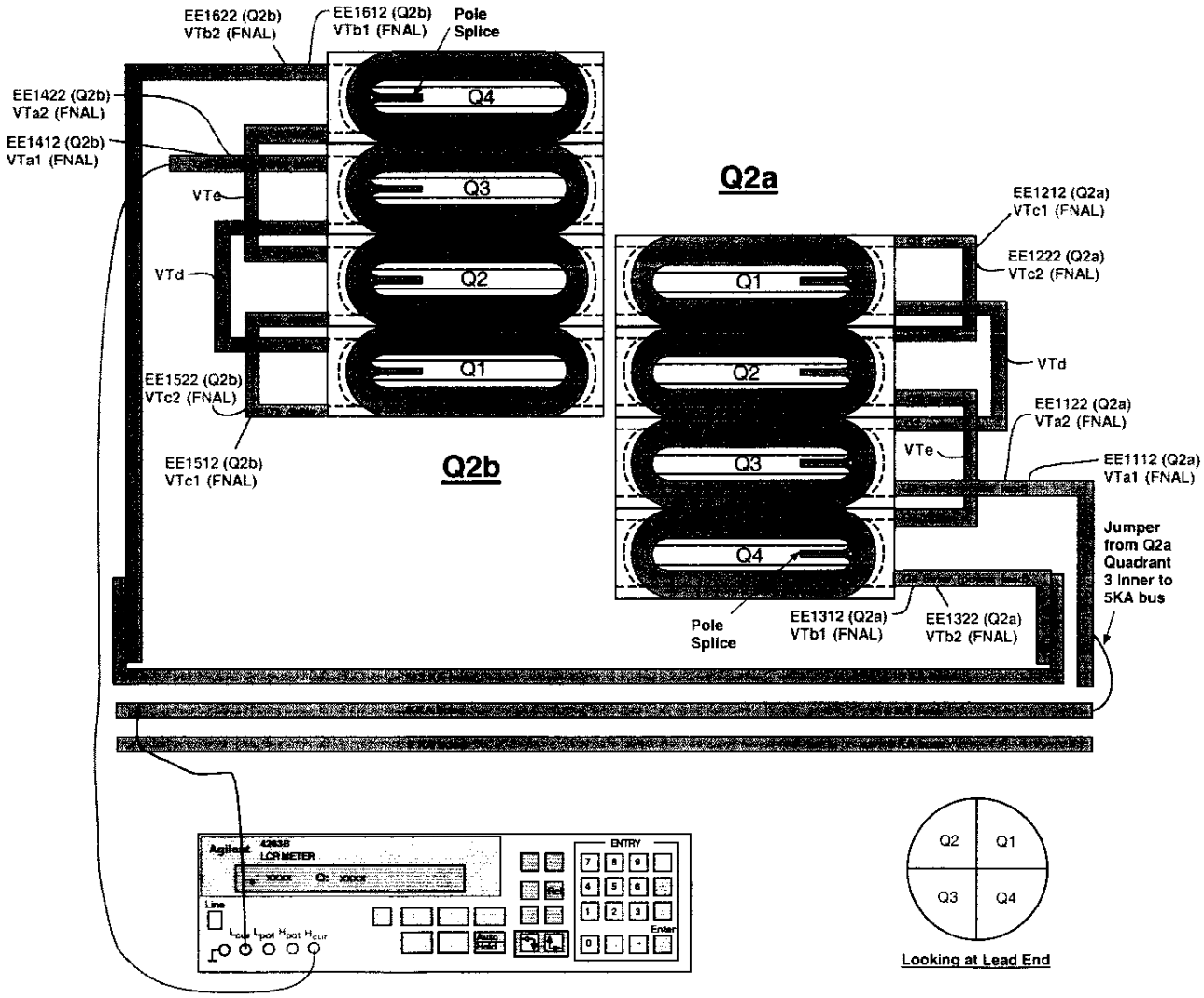

(Q2a) Inductance				Nominal ~ 3.34 to 3.48 mH
Voltage Tap Serial Numbers				Quadrant Total Inductance
Connect	Fermi	CERN	Quadrant	
H_{POT}	VTc1Q2a	EE1212	Quadrant 1	3.401 mH
L_{POT}	VTdQ2a	EMPTY		
H_{POT}	VTeQ2a	EMPTY	Quadrant 2	3.397 mH
L_{POT}	VTc1Q2a	EE1212		
H_{POT}	VTa1Q2a	EE1112	Quadrant 3	3.372 mH
L_{POT}	VTdQ2a	EMPTY		
H_{POT}	VTb1Q2a	EE1312	Quadrant 4	3.398 mH
L_{POT}	VTeQ2a	EMPTY		

H_{POT}	VTb1Q2a	EE1312	Total Cold Mass	Nominal ~ 13.28 to 13.78 mH
L_{POT}	VTa1Q2a	EE1112		mH

(Q2a) Q-Factor				Nominal ~ 3.7 to 4.0
Voltage Tap Serial Numbers				Quadrant Total Q
Connect	Fermi	CERN	Quadrant	
H_{POT}	VTc1Q2a	EE1212	Quadrant 1	3.8
L_{POT}	VTdQ2a	EMPTY		
H_{POT}	VTeQ2a	EMPTY	Quadrant 2	3.8
L_{POT}	VTc1Q2a	EE1212		
H_{POT}	VTdQ2a	EMPTY	Quadrant 3	3.8
L_{POT}	VTa1Q2a	EE1112		
H_{POT}	VTb1Q2a	EE1312	Quadrant 4	3.8
L_{POT}	VTeQ2a	EMPTY		

H_{POT}	VTb1Q2a	EE1312	Total Cold Mass	Nominal ~ 3.7 to 4.0
L_{POT}	VTa1Q2a	EE1112		

Technician(s)

9-14-05
Date

To measure the resistance of a bussed Q2:

1. Use Valhalla Scientific 4300B digital micro-ohmmeter.
2. Set Test Current to 1 amp.
3. Set Scale to 2V full scale.
4. Turn temperature compensation on.
5. Turn test current off.
6. Put jumper between Q2a Q3 inner power lead and 5 KA bus as shown in figure.
7. Connect I_{HI} to the 5KA bus (Q2a Q3 inner power lead) as shown in figure.
8. Connect I_{LO} to the Q2b Q3 inner power lead as shown in figure.
9. Turn test current on.
10. Connect V_{HI} and V_{LO} buttons to voltage taps as shown below.
11. Read resistance and record in traveler.

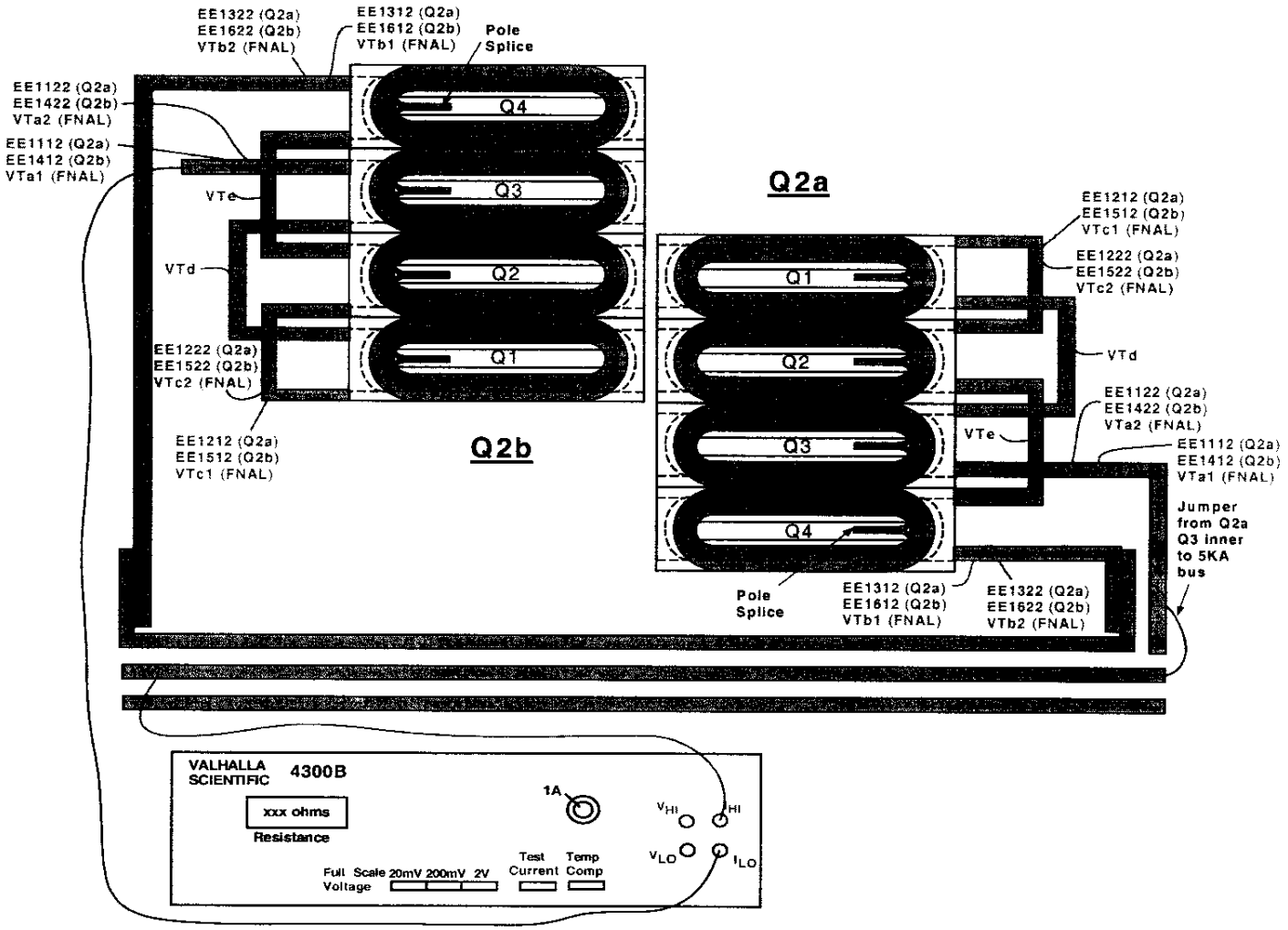

(Q2b) Resistance				Nominal ~ 560 to 585 mΩ
Voltage Tap Serial Numbers				Quadrant Total Resistance
Connect	Fermi	CERN	Quadrant	
V_{HI}	VTc1Q2b	EE1512	Quadrant 1	578.3 mΩ
V_{LO}	VTdQ2b	EMPTY		
V_{HI}	VTeQ2b	EMPTY	Quadrant 2	578.3 mΩ
V_{LO}	VTc1Q2b	EE1512		
V_{HI}	VTdQ2b	EMPTY	Quadrant 3	578.7 mΩ
V_{LO}	VTa1Q2b	EE1412		
V_{HI}	VTb1Q2b	EE1612	Quadrant 4	578.2 mΩ
V_{LO}	VTeQ2b	EMPTY		

Note: When Measuring Total Cold Mass, Set Test Current to 0.1 Amp				
V_{HI}	VTb1Q2b	EE1612	Total Cold Mass	Nominal ~ 2.305 Ω
V_{LO}	VTa1Q2b	EE1412		2.314 Ω

Technician(s) _____ Date 9-14-05

Check the resistance of the Redundant Voltage Taps.

Q2b Redundant Voltage Taps			
Connect	Fermi	CERN	Resistance
V_{HI}	VTc2Q2b	EE1522	1156.5 Ω
V_{LO}	VTa2Q2b	EE1422	
V_{HI}	VTb2Q2b	EE1622	1156.2 Ω
V_{LO}	VTc2Q2b	EE1522	

Technician(s) _____ Date 9-14-05

To measure Ls and Q of a Bussed Q2b:

1. Use Agilent 4263B LCR Meter.
2. Turn power on by pushing line button. Wait 30 seconds until display screen is lit.
3. Recall program #1. To do this, push recall (Rcl), then push #1, then push Enter.
4. Push Auto/Hold button to release hold.
5. Verify that the frequency displayed in the upper right corner of the display screen is 1000 Hz and the level recorded in the lower right corner of the display screen is 1V or 1000 mV.
6. Connect jumper between Q2a/Quadrant 3 inner power lead and 5KA bus as shown in figure.
7. Connect H_{cur} to 5KA bus as shown in figure.
8. Connect L_{cur} to Q2b/Quadrant 3 inner power lead as shown in figure.
9. Connect H_{pot} and L_{pot} buttons to voltage taps as shown below.

To measure Q2b:

- To measure Q1, connect H_{pot} to VTc1 (EE1512 for Q2b), and L_{pot} to VTd.
- To measure Q2, connect H_{pot} to VTe and L_{pot} to VTc1 (EE1512 for Q2b).
- To measure Q3, connect H_{pot} to VTd and L_{pot} to VTa1 (EE1412 for Q2b).
- To measure Q4, connect H_{pot} to VTb1 (EE1612 for Q2b) and L_{pot} to VTe.
- To measure total, connect H_{pot} to VTb1 (EE1612 for Q2b) and L_{pot} to VTa1 (EE1412 for Q2b).

10. Read Ls and Q from display and record in traveler.

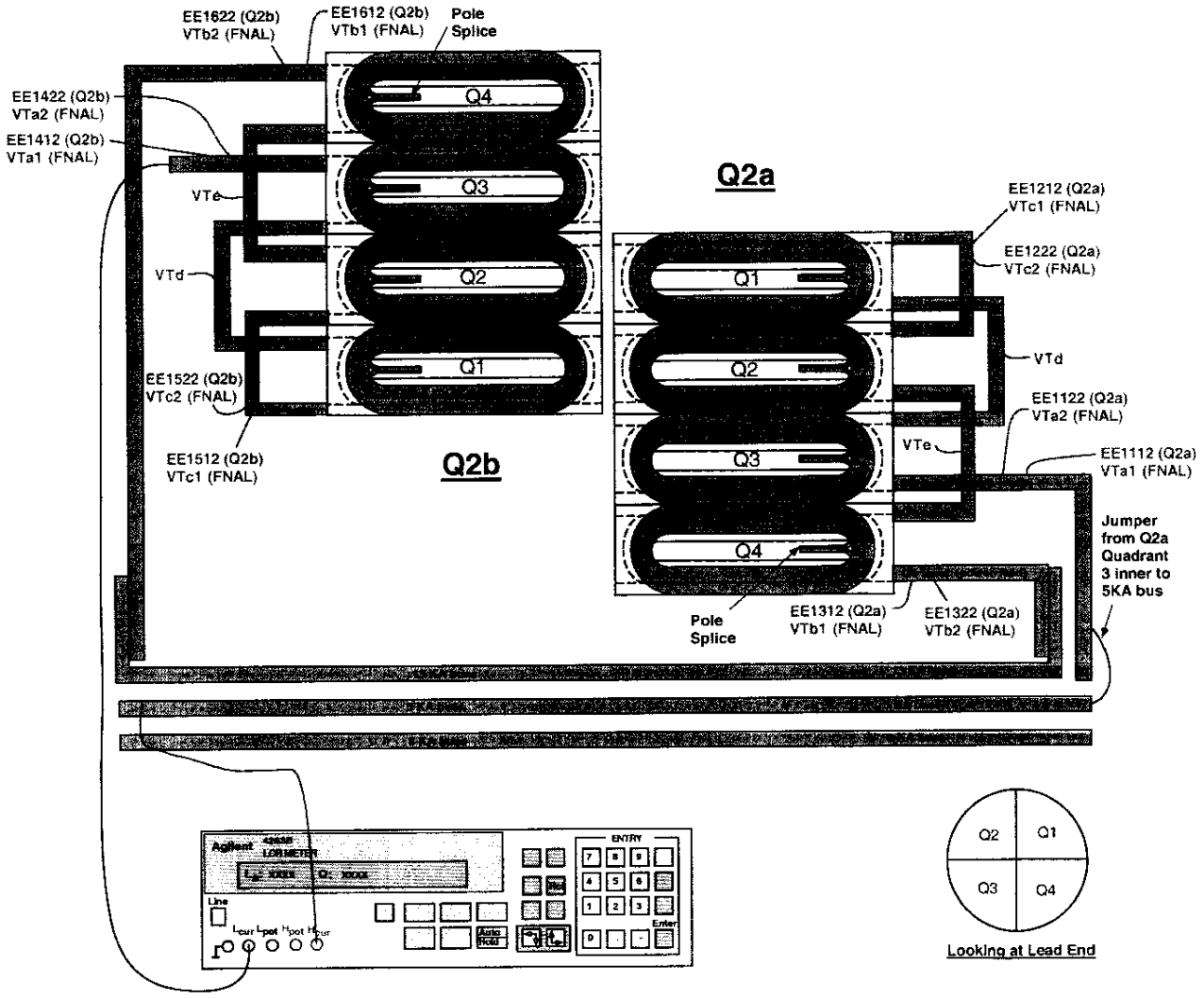

(Q2b) Inductance				Nominal ~ 3.34 to 3.48 mH
Voltage Tap Serial Numbers				Quadrant Total Inductance
Connect	Fermi	CERN	Quadrant	
H_{POT}	VTc1Q2b	EE1512	Quadrant 1	3.429 mH
L_{POT}	VTdQ2b	EMPTY		
H_{POT}	VTeQ2b	EMPTY	Quadrant 2	3.414 mH
L_{POT}	VTc1Q2b	EE1512		
H_{POT}	VTdQ2b	EMPTY	Quadrant 3	3.394 mH
L_{POT}	VTa1Q2b	EE1412		
H_{POT}	VTb1Q2b	EE1612	Quadrant 4	3.446 mH
L_{POT}	VTeQ2b	EMPTY		

H_{POT}	VTb1Q2b	EE1612	Total Cold Mass	Nominal ~ 13.28 to 13.78 mH
L_{POT}	VTa1Q2b	EE1412		13.695 mH

(Q2b) Q-Factor				Nominal ~ 3.7 to 4.0
Voltage Tap Serial Numbers				Quadrant Total Q
Connect	Fermi	CERN	Quadrant	
H_{POT}	VTc1Q2b	EE1512	Quadrant 1	3.8
L_{POT}	VTdQ2b	EMPTY		
H_{POT}	VTeQ2b	EMPTY	Quadrant 2	3.8
L_{POT}	VTc1Q2b	EE1512		
H_{POT}	VTdQ2b	EMPTY	Quadrant 3	3.9
L_{POT}	VTa1Q2b	EE1412		
H_{POT}	VTb1Q2b	EE1612	Quadrant 4	3.9
L_{POT}	VTeQ2b	EMPTY		

H_{POT}	VTb1Q2b	EE1612	Total Cold Mass	Nominal ~ 3.7 to 4.0
L_{POT}	VTa1Q2b	EE1412		3.8

Technician(s)

9-14-05
Date

To measure the resistance of a Thermometer (RTD):

1. Use Hewlett Packard HP3457A digital multimeter.
2. Record temperature of building within +/- 5 degrees.
3. Press line button to turn line on.
4. Connect wires as shown in Figure below.
   U+ (Black) to Sense HI
   I+ (Yellow) to Input HI
   U- (Red) to Sense LO
   I- (Green) to Input LO
5. Push blue button (function key) once.
6. Push OHMF button.
7. Verify arrow in readout is above the 4WΩ (meaning a 4 wire resistance measurement).
8. Read resistance in ohms and record in traveler.

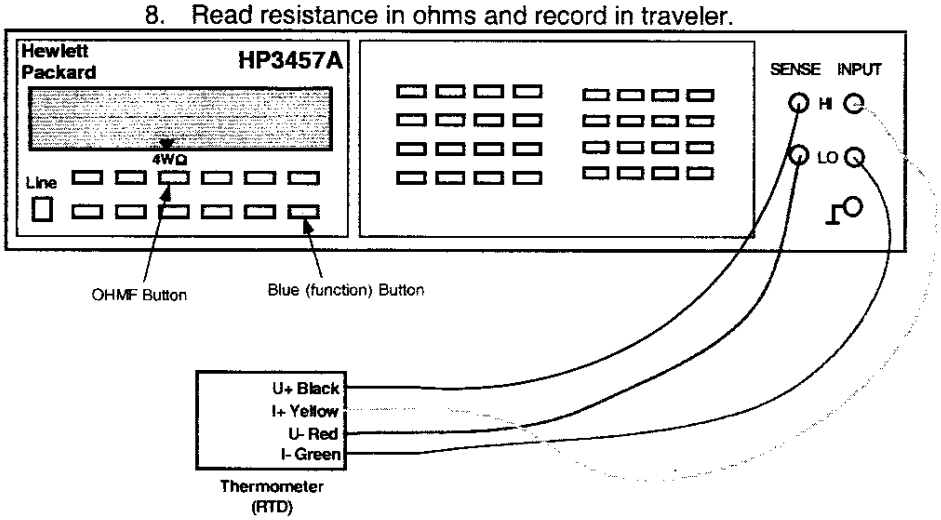

To measure the resistance of a Cryogenic (Warm-up) Heater

1. Use Hewlett Packard HP3457A digital multimeter.
2. Record temperature of building within +/- 5 degrees.
3. Press line button to turn line on.
4. Connect wires as shown in Figure below.
5. Push blue button (function key) once.
6. Push OHMF button.
7. Verify arrow in readout is above the 4WΩ (meaning a 4 wire resistance measurement).
   Note: Although this is technically a 4 wire measurement, it is effectively a 2 wire measurement, since there are only 2 wires connected to each heater.
8. Read resistance in ohms and record in traveler.

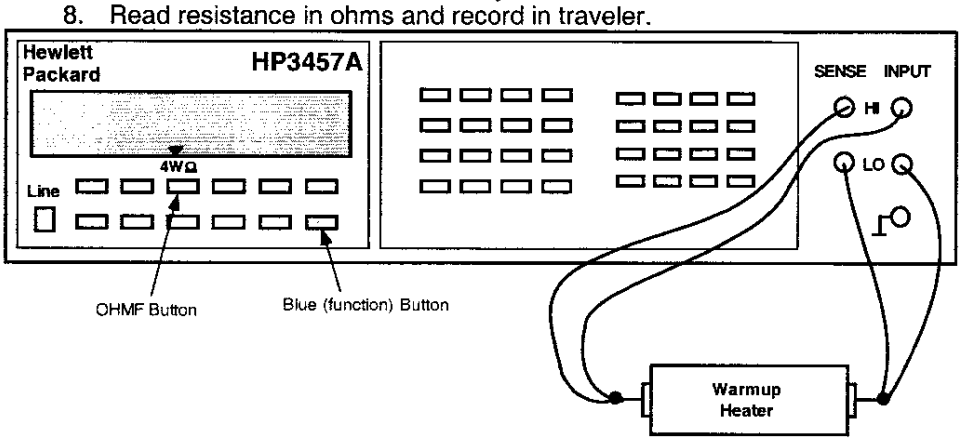

Q2a - RTD's and Cryogenic (warm-up) Heaters

Temperature of Building (+/- 5°): 75°F

Component	Fermi	CERN	Resistance	Range	Mfr. Resistance (Expedition)
Q2a RTD, primary	TaQ2a	TT8312	56.447 Ω	60 to 70 Ω	56.537 Ω
Q2a RTD, redundant	TbQ2a	TT8322	56.27 Ω	60 to 70 Ω	56.313 Ω
Q2A Cryogenic (warm-up) Heater (LE) - wire toward cold mass end plate (CERN #1 I+)	W1aQ2A	EH8312+	18.115 Ω		
Q2A Cryogenic (warm-up) Heater (LE) - wire toward cold mass mag center (CERN #1 I-)	W2aQ2A	EH8312-			
Q2A Cryogenic (warm-up) Heater (Non-LE) - wire toward cold mass end plate (CERN #2 I+)	W1bQ2A	EH8322+	17.820 Ω		
Q2A Cryogenic (warm-up) Heater (Non-LE) - wire toward cold mass mag center (CERN #2 I-)	W2bQ2A	EH8322-			

Technician(s)

9-14-05
Date

Q2b - RTD's and Cryogenic (warm-up) Heaters

Temperature of Building (+/- 5°): 75°F

Component	Fermi	CERN	Resistance	Range	Mfr. Resistance (Expedition)
Q2b RTD, primary	TaQ2b	TT8332	59.046 Ω	60 to 70 Ω	59.084 Ω
Q2b RTD, redundant	TbQ2b	TT8342	58.953 Ω	60 to 70 Ω	59.054 Ω
Q2B Cryogenic (warm-up) Heater (LE) - wire toward cold mass end plate (CERN #1 I+)	W1aQ2B	EH8332+	17.833 Ω		
Q2B Cryogenic (warm-up) Heater (LE) - wire toward cold mass mag center (CERN #1 I-)	W2aQ2B	EH8332-			
Q2B Cryogenic (warm-up) Heater (Non-LE) - wire toward cold mass end plate (CERN #2 I+)	W1bQ2B	EH8342+	17.754 Ω		
Q2B Cryogenic (warm-up) Heater (Non-LE) - wire toward cold mass mag center (CERN #2 I-)	W2bQ2B	EH8342-			

Technician(s)

9-14-05
Date

Using the Hewlett Packard HP3457A digital multimeter, measure the Strip Heater Resistance for Q2a and Q2b.

Q2a Strip Heater Resistance				
Fermi	CERN	Description	Limit	Resistance
H1aQ2a	YT1112+	Circuit A	18.20 to 21 Ω	21.341 Ω
H2aQ2a	YT1112-			
H1bQ2a	YT1122+	Circuit B	18.20 to 21 Ω	21.329 Ω
H2bQ2a	YT1122-			

Technician(s) _____ Date 9-14-05

Q2b Strip Heater Resistance				
Fermi	CERN	Description	Limit	Resistance
H1aQ2b	YT1132+	Circuit A	18.20 to 21 Ω	19.191 Ω
H2aQ2b	YT1132-			
H1bQ2b	YT1142+	Circuit B	18.20 to 21 Ω	19.420 Ω
H2bQ2b	YT1142-			

Technician(s) _____ Date 9-14-05

8.2 Using the HP3457A, connect power thru the connector Power Leads (HA2 and HB2 to measure Q2-H2 or VA2 and VB2 to measure Q2-V2). Connect the Sense Leads as shown in table below and record resistance.

REPLACE W/ ADDED PAGE 1 OF 1

Corrector Bus Leads

	V2A	V2B	H2A	H2B
	V1A	V1B	H1A	H1B

(View Looking into Q2b)

Per TRR# 1749

MCBX Corrector Coil Taps			
Component	FermiLab Label	CERN Label	Resistance
Q2-H2	VTH2	EE8122	
	HA2	N/A	Ω
Q2-V2	VTV2	EE8112	
	VA2	N/A	Ω

Technician(s) _____ Date _____

8.3 Check Q1 Instrumentation Bus Wires for Continuity.

Module	Pin	Fermi	CERN	KEK	Description	Done
M2	1	VTa1Q1	EE1111	a1	Q1 Lead Voltage Tap "a", primary	✓
M2	2	VTa2Q1	EE1121	a2	Q1 Lead Voltage Tap "a", redundant	✓
M2	3	VTc1Q1	EE1211	c1	Q1 Center Voltage Tap "c", primary	✓
M2	4	VTc2Q1	EE1221	c2	Q1 Center Voltage Tap "c", redundant	✓
M2	5	VTb1Q1	EE1311	b1	Q1 Lead Voltage Tap "b", primary	✓
M3	5	VTb2Q1	EE1321	b2	Q1 Lead Voltage Tap "b", redundant	✓
M5	1	VTH1	EE8121		Corrector voltage tap Q1-H1 (skew dipole) (on MCBX, MCBXH, A+ lead)	✓
M5	2	VTV1	EE8111		Corrector voltage tap Q1-V1 (normal dipole) (on MCBX, MCBXV A+ lead)	✓
M7	1	W1aQ1	EH8311+		Q1 Cryogenic Heater lead end - wire at top (CERN #1 I+)	✓
M7	2	W2aQ1	EH8311-		Q1 Cryogenic Heater lead end - wire at bottom (CERN #1 I-)	✓
M7	3	W1bQ1	EH8321+		Q1 Cryogenic Heater non-lead end - wire at top (CERN #2 I+)	✓
M7	4	W2bQ1	EH8321-		Q1 Cryogenic Heater non-lead end - wire at bottom (CERN #2 I-)	✓
M9	1	H1aQ1	YT1111+	HA1	Q1 Protection (Strip) Heater, ("a" circuit) (CERN lead #1+)	✓
M9	3	H2aQ1	YT1111-	HA2	Q1Protection (Strip) Heater, ("a" circuit) (CERN lead #1-)	✓
M9	5	H1bQ1	YT1121+	HB1	Q1 Protection (Strip) Heater, ("b" circuit) (CERN lead #2+)	✓
M10	4	H2bQ1	YT1121-	HB2	Q1 Protection (Strip) Heater, ("b" circuit) (CERN lead #2-)	✓
M12	1	TaQ1_I+	TT8311 I+		Q1 RTD, primary Wire color: Yellow	✓
M12	2	TaQ1_I-	TT8311 I-		Q1 RTD, primary Wire color: Green	✓
M12	3	TaQ1_V+	TT8311 U+		Q1 RTD, primary Wire color: Black	✓
M12	4	TaQ1_V-	TT8311 U-		Q1 RTD, primary Wire color: Red	✓
M12	5	TbQ1_I+	TT8321 I+		Q1 RTD, primary Wire color: Yellow	✓
M12	6	TbQ1_I-	TT8321 I-		Q1 RTD, primary Wire color: Green	✓
M12	11	TbQ1_V+	TT8321 U+		Q1 RTD, primary Wire color: Black	✓
M12	10	TbQ1_V-	TT8321 U-		Q1 RTD, primary Wire color: Red	✓

Technician(s)

9-14-05
Date

9.0 Final Preparations

9.1 Install Target Holders (Right, MD-390539), (Left, MD-390540) and (MD-390211) as per Q2 Cryostat General Assembly (ME-390127).

N/A

Technician(s) _____ Date _____

9.2 Install Reference Socket Cup (MA-390426) as per Q2 Cryostat General Assembly (ME-390127).

N/A

Technician(s) _____ Date _____

9.3 Drill Holes for Spring Pins (MA-393360) in each of the three types of Target Holders (Right, MD-390539, Left, MD-390540, & MD-390211). Ensure that the holes are centered in a straight line as well as equidistant between the two corresponding bolt holes.

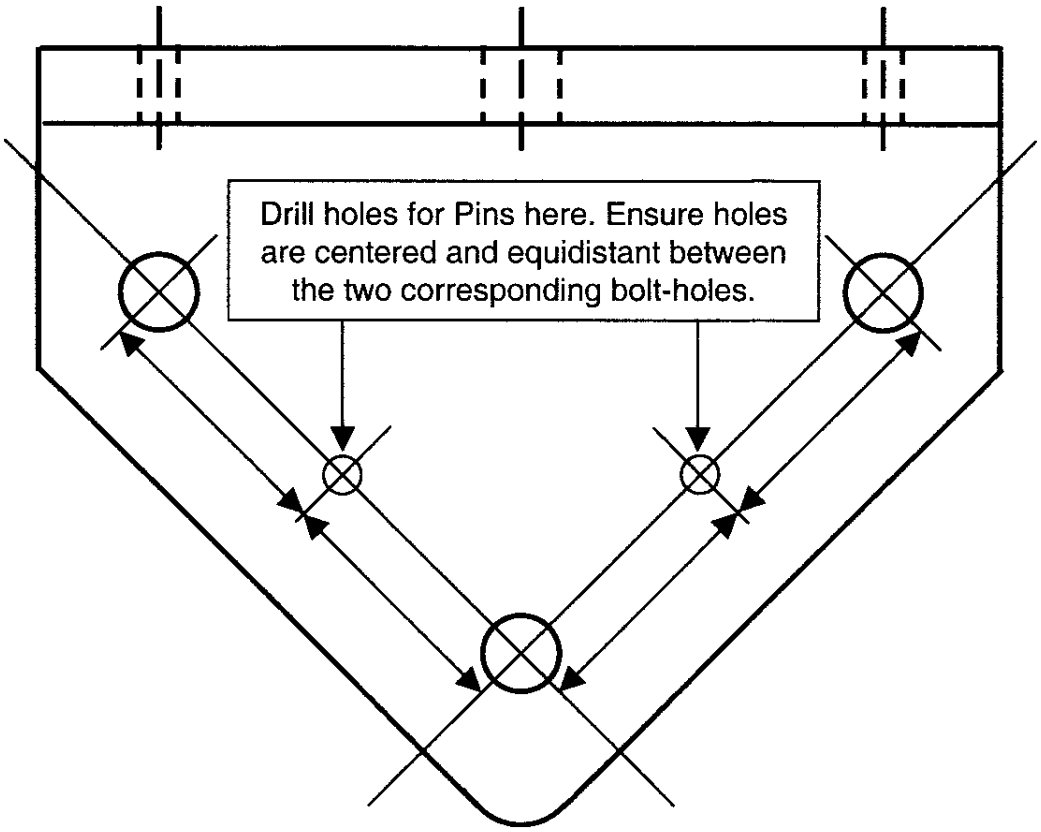

Target Holder

(Right and Left Target Holder will differ in appearance from the above, but holes will be made the same way.)

Technician(s) _____ Date _____

9.4 Install the Vinyl Flange Covers (MA-390491), (MA-390492), (MA-390493), (MA-390494), & the Alignment Fiducial Covers (MA-390495).

Technician(s) _____ Date _____

10.0 Production Complete

10.1 Process Engineering: verify that the LHC Cryostat Assembly Traveler (5520-TR-333644) is accurate and complete. This shall include a review of all steps to ensure that all operations have been completed and signed off. Ensure that all Discrepancy Reports, Nonconformance Reports, Repair/Rework Forms, Deviation Index and dispositions have been reviewed by the Responsible Authority for conformance before being approved.

Comments:

Process Engineering/Designee

Date 1/11/06

8.2 Using the HP3457A, connect power thru the connector Power Leads (H2A and H2B to measure Q2-H2 or V2A and V2B to measure Q2-V2). Connect the Sense Leads as shown in table below and record resistance.

Corrector Bus Leads

	V2A	V2B	H2A	H2B
	V1A	V1B	H1A	H1B

(View Looking into Q2b)

Readout Labels		Power Labels	Resistance
V2A	EE8112	V2A, V2B	.03 Ω
EE8112	V2B		17.734 Ω
V2A	V2B		17.732 Ω
H2A	EE8122	H2A, H2B	.04 Ω
EE8122	H2B		21.698 Ω
H2A	H2B		21.740 Ω

E. [illegible]
Technician(s)

9-14-05
Date

TD - Engineering Fabri ion Component Kit List

ORIGINAL

Process Engineering

Component Serial No. LQXB06-1

Kit submitted by: JOHN SZOSTAK Ext. 2003

Fermi ID No. 02943C

Date submitted: 4-Aug-05

Need date: 9-Aug-05

Deliver to: ICB

Use with Traveler No. 333644

Job No. 248

M&S task number: 300 1.1.1.3.4

Drawing Title: Q2 CRYOSTAT ASSEMBLY (GENERAL)

Drawing No. ME-390206 Rev. D

Material Control

Parts available

Verified by: Marsha Schmidt

Fermi ID No. 04223N

Date submitted to stockroom: 8/8/2005

RECEIVED AUG 0 8 2005 MATERIAL CONTROL /IB4

Issued by:

Fermi ID No. 12792

Date issued: 8-10-05

Parts received by E&F:

Fermi ID No. 02943C

Date received by E&F: 8/10/05

	Description	Dwg Size	Number	Rev	Unit	Quantity Required	Location	Quantity Issued	E&F Verified	Routing Form Number	Spares Number / Comment
1	ADJUSTING SCREW	MB	390039	C	EA	6	IB4 Bin	6		81148	19 pcs.
2	VACUUM VESSEL ASSEMBLY	ME	390129	E	EA	1	ICB HAS				
3	TARGET HOLDER	MD	390211	B	EA	6	ICB HAS				
4	BLANK, NON ROTATABLE CONFLAT FLANGE, 4.62" OD	MA	390374	*	EA	12	ICB HAS				
5	COPPER GASKET	MA	390375	*	EA	12	IB4 Bin	12		83138	81 pcs.
6	BOLT SET, HEX HEAD 5/16 - 24 x 1.25 LG.	MA	390376	*	EA	120	ICB HAS				
7	WASHER, 0.656" ID x 1.38" OD x 0.13 THK., S.S.	MA	390377	*	EA	12	ICB HAS				
8	TAYLOR HOBSON SOCKET CUP	MA	390426	*	EA	12	ICB HAS				
9	75MM DIA. FLANGE COVER	MA	390491	*	EA	6	ICB HAS				
10	114MM DIA. FLANGE COVER	MA	390492	*	EA	4	ICB HAS				

TD - Engineering Fabrication Component Kit List

ORIGINAL

	Description	Dwg Size	Number	Rev	Unit	Quantity Required	Location	Quantity Issued	E&F Verified	Routing Form Number	Spares Number / Comment
11	134MM DIA. FLANGE COVER	MA	390493	*	EA	8	ICB HAS				
12	201MM DIA. FLANGE COVER	MA	390494	*	EA	2	ICB HAS				
13	ALIGNMENT FIDUCIAL COVER	MA	390495	*	EA	12	ICB HAS				
14	TARGET HOLDER, RIGHT	MD	390539	*	EA	3	ICB HAS				
15	TARGET HOLDER, LEFT	MD	390540	*	EA	3	ICB HAS				
16	COLD MASS FIDUCIAL MOUNTING BLOCK	MB	390809	*	EA	2	R1,1,3	2	[illegible]	82261	8 pcs.
17	ADJUSTING SCREW VERSION 2 (BRONZE)	MC	390878	*	EA	6	R7,1,2	6	[illegible]	83342	50 pcs.
18	M16-2 x 70mm HEX SHSC, S.S.	MA	393021	*	EA	12	ICB HAS				
19	M6 FLAT WASHER 18-8 S.S.	MA	393024	*	EA	48	ICB HAS				
20	SPRING PIN, 8 x 26	MA	393031	*	EA	12	ICB HAS				
21	M10-1.5 x 25mm HEX SHSC, S.S.	MA	393036	*	EA	36	ICB HAS				
22	M6-1.0 x 35mm HEX SHCS 18-8 S.S.	MA	393045	*	EA	24	ICB HAS				
23	M8 x 30mm SPRING PIN 18-8 S.S.	MA	393048	*	EA	12	ICB HAS				
24	M10 LOCK WASHER 18-8 S.S.	MA	393220	*	EA	36	ICB HAS				
25	M4 SPRING PIN SLOTTED, PLAIN STEEL	MA	393360	*	EA	24	ICB HAS				
Q2 INSULATED SHIELD & PIPING ASSEMBLY		ME	390207	*	EA	1	ICB HAS				
26	Q2 SHIELD MLI INNER BLANKET	ME	390313	*	EA	1	ICB HAS				
27	Q2 SHIELD MLI OUTER BLANKET	ME	390314	*	EA	1	ICB HAS				

TD - Engineering Fabrication Component Kit List

ORIGINAL

	Description	Dwg Size	Number	Rev	Unit	Quantity Required	Location	Quantity Issued	E&F Verified	Routing Form Number	Spares Number / Comment
Q2 THERMAL SHIELD ASSEMBLY		ME	390161	C	EA	1	ICB HAS				
28	SUPPORT BAND	ME	390083	A	EA	8	ICB HAS				
29	RETAINER	MA	390086	*	EA	16	ICB HAS				
30	END SECTION	ME	390162	*	EA	4	ICB HAS				
31	MID SECTION	ME	390163	*	EA	4	ICB HAS				
32	CENTER SECTION	ME	390164	*	EA	2	ICB HAS				
33	COOLING TUBE WELDMENT	MD	390165	*	EA	2	ICB HAS				
34	ALUMINUM SPACER	MA	390373	*	EA	64	ICB HAS				
35	RETAINING WASHER	MA	390378	*	EA	394	IB4 Bin	394	QA	79002	1333 pcs.
36	THERMAL SHIELD BRACKET	MD	390783	*	EA	4	ICB HAS				
37	M5 x 16mm BUTTON HEAD CAP SCREW (Need 135 more)	MA	393028	*	EA	394	IB4 Bin	259	QA	79003	1117 pcs.
Q2 CRYOSTAT ASSEMBLY INTERNAL PIPING		ME	390208	E	EA	1					
38	HEAT EXCHANGER OUTER SHELL END FLANGE	MC	390031	B	EA	2	IB4 Bin	2	QA	77209	45 pcs.
39	PUMPING LINE END FLANGE	MC	390032	B	EA	2	IB4 Bin	2	QA	77210	47 pcs.
40	COOL DOWN LINE END FLANGE	MB	390033	B	EA	2	IB4 Bin	2	QA	7708	28 pcs.
41	RETAINING CLIP	MA	390103	*	EA	16	IB4 Bin	16	QA	76785	103 pcs.
42	HEAT EXCHANGER TO COLD MASS CONNECTOR	MC	390111	A	EA	1	R1,2,2	1	QA	83156	3 pcs.
43	TIE BAR RETAINING CLAMP	MB	390136	*	EA	8	ICB HAS				

ORIGINAL

TD - Engineering Fabrication Component Kit List

	Description	Dwg Size	Number	Rev	Unit	Quantity Required	Location	Quantity Issued	E&F Verified	Routing Form Number	Spares Number / Comment
44	PUMPING LINE PIPE STOP	MB	390149	*	EA	4	IB4 Bin	4	[illegible]	77133	36 pcs.
45	COOL DOWN LINE PIPE STOP	MB	390150	*	EA	4	IB4 Bin	4	[illegible]	77134	36 pcs.
46	Q2 4.5K INTERCEPT LINE TUBE	MB	390204	*	EA	2	P/N	2	[illegible]	N/A	7 pcs.
47	Q2 PIPE SUPPORT ASSEMBLY	MD	390258	A	EA	4	ICB HAS				
48	INTERCEPT LINE PIPE STOP	MA	390379	A	EA	6	IB4 Bin	6	[illegible]	78894	97 pcs.
49	PIPE SUPPORT BRACE	MB	390452	A	EA	4	ICB HAS				
50	M6 x 45mm HEX SHCS, S.S.	MA	393017	*	EA	8	ICB HAS				
51	M6 HEX NUT, S.S.	MA	393022	A	EA	8	ICB HAS				
52	M6 FLAT WASHER, S.S.	MA	393024	*	EA	8	ICB HAS				
53	M6 LOCK WASHER, S.S.	MA	393026	*	EA	8	ICB HAS				
54	Q2 COOLDOWN LINE REBUILD WELDMENT	MD	390887	*	EA	1					
55	TUBE EXTENSION WELD FITTING	MC	390881	*	EA	2	ICB HAS				
56	COOLDOWN LINE STD. 20 FT LONG TUBE	MD	390885	*	EA	2	ICB HAS				
57	CENTER TUBE	MD	390886	*	EA	1	ICB HAS				
58	Q2 PUMPING LINE REBUILD WELDMENT	MD	390890	*	EA	1					
59	PUMPING LINE PIPE EXTENSION WELD FITTING	MC	390883	*	EA	2	ICB HAS				
60	PUMPING LINE 20 FT LONG PIPE	MD	390888	*	EA	2	ICB HAS				
61	PUMPING LINE CENTER PIPE	MD	390889	*	EA	1	ICB HAS				

ORIGINAL

TD - Engineering Fabrication Component Kit List

	Description	Dwg Size	Number	Rev	Unit	Quantity Required	Location	Quantity Issued	E&F Verified	Routing Form Number	Spares Number / Comment
	Q2 HEAT EXHANGER REBUILD ASSEMBLY	ME	390884	*	EA	1					
	CORRUGATED TUBE ASSEMBLY	ME	390143	A	EA	1					
62	HEAT EXCHANGER CORRUGATED TUBE SUPPORT	MD	390028	*	EA	8	ICB HAS				
63	HEAT EXCHANGER CORRUGATED TUBE RESTRICTOR	MD	390029	A	EA	2	ICB HAS				
64	Q2 HEAT EXCHANGER CORRUGATED TUBE WELDMENT	ME	390394	*	EA	1	ICB HAS				
65	OUTER SHELL 20 FT. LONG PIPE	MD	390882	*	EA	2	ICB HAS				
66	OUTER SHELL CENTER PIPE	MD	390880	*	EA	1	ICB HAS				
67	OUTER SHELL EXTENSION WELD FITTING	MD	390879	*	EA	2	ICB HAS				
	Q2 PIPING INSULATION	ME	390306	A	EA	1					
68	COLD MASS MLI CENTER BLANKET	ME	390305	*	EA	1	ICB HAS				
69	PIPING MLI END BLANKET	ME	390307	*	EA	2	ICB HAS				
70	PIPING MLI MID BLANKET	ME	390308	*	EA	2	ICB HAS				
	Q2 SUSPENSION SYSTEM INSTALLATION ASSEMBLY	ME	390310	*	EA	1					
71	TIE BAR SHIM, 6.4mm	MB	390118	*	EA	6	ICB HAS				
72	TIE BAR SHIM, 2.4mm	MB	390119	*	EA	6	ICB HAS				
73	TIE BAR SHIM, 0.6mm	MB	390120	*	EA	6	ICB HAS				
74	Q2 TIE BAR ASSEMBLY	MC	390167	*	EA	4	ICB HAS				
75	OUTBOARD SUSPENSION MOUNTING BRACKET	MD	390280	*	EA	4	ICB HAS				

TD - Engineering Fabrication Component Kit List

ORIGINAL

	Description	Dwg Size	Number	Rev	Unit	Quantity Required	Location	Quantity Issued	E&F Verified	Routing Form Number	Spares Number / Comment
76	MIDDLE SUSPENSION MTG BRACKET	MD	390281	*	EA	2	ICB HAS				
77	Q2 COLD MASS WELDED ASSEMBLY	ME	390309	B	EA	1	ICB HAS				
78	M8 x 50mm SHCS, S.S.	MA	393020	*	EA	18	ICB HAS				
79	M8 HEX NUT, S.S.	MA	393023	*	EA	18	ICB HAS				
80	M8 FLAT WASHER, S.S.	MA	393025	*	EA	18	ICB HAS				
81	M8 LOCK WASHER, S.S.	MA	393027	*	EA	18	ICB HAS				
	FIXED SUPPORT ASSEMBLY	ME	390041	D	EA	1	ICB HAS				
82	RING ASSEMBLY	ME	390043	B	EA	1	ICB HAS				
83	SUPPORT PIN	MB	390047	B	EA	2	ICB HAS				
84	1.0 mm THK SHIM	MA	390275	A	EA	8	ICB HAS				
85	0.5 mm THK SHIM	MA	390276	*	EA	8	ICB HAS				
86	M16 x 40.0 mm LG SHOULDER SCREW, 18-8 S.S.	MA	390277	*	EA	8	ICB HAS				
87	TWO-PIECE CLAMP-ON COLLAR	MA	390321	A	EA	4	ICB HAS				
88	0.13 mm THK SHIM	MA	390480	*	EA	8	ICB HAS				
89	0.25 mm THK SHIM	MA	390481	*	EA	12	ICB HAS				
	SLIDING SUPPORT ASSEMBLY	ME	390042	C	EA	2	ICB HAS				
90	RING ASSEMBLY	ME	390043	B	EA	2	ICB HAS				
91	SUPPORT PIN	MB	390047	B	EA	4	ICB HAS				

TD - Engineering Fabrication Component Kit List

ORIGINAL

	Description	Dwg Size	Number	Rev	Unit	Quantity Required	Location	Quantity Issued	E&F Verified	Routing Form Number	Spares Number / Comment
92	1.0 mm THK SHIM	MA	390275	A	EA	16	ICB HAS				
93	0.5 mm THK SHIM	MA	390276	*	EA	16	ICB HAS				
94	M16 x 40.0 mm LG SHOULDER SCREW, 18-8 S.S.	MA	390277	*	EA	16	ICB HAS				
95	0.13 mm THK SHIM	MA	390480	*	EA	16	ICB HAS				
96	0.25 mm THK SHIM	MA	390481	*	EA	24	ICB HAS				
	Q2 INSULATION INSTALLATION ASSEMBLY	ME	390302	A	EA	1	ICB HAS				
97	MLI END BLANKET	ME	390303	*	EA	2	ICB HAS				
98	MLI MID BLANKET	ME	390304	*	EA	2	ICB HAS				
99	MOUNTING LUG BLANKET	MC	390496	*	EA	8	ICB HAS				
	Q2 INSTALLATION TIE-ROD ASSEMBLY	MC	390637	*	EA	4	ICB HAS				
100	SHORT END THREAD ROD	MA	390635	*	EA	4	ICB HAS				
101	JAM NUT (LH)	MA	393046	*	EA	8	ICB HAS				
102	JAM NUT (RH)	MA	393225	*	EA	16	ICB HAS				
103	COUPLING NUT (RH / LH)	MA	393226	*	EA	8	ICB HAS				
104	THREAD ROD (RH) 6 FT. LONG	MA	393227	*	EA	4	ICB HAS				
105	THREAD ROD (LH) 3 FT. LONG	MA	393228	*	EA	4	ICB HAS				

ADDITIONAL PARTS REQUEST

ADDITIONAL PARTS REQUEST FORM SHALL BE USED TO ACCESS ALL ITEMS FROM INVENTORY WITH THE EXCEPTION OF PARTS KITS.

THIS FORM MUST BE SIGNED BY AN ACQUISITIONER BEFORE BRINGING TO THE STOCKROOM

MAGNET OR COIL # LQXB06-1

REQUESTED BY Jim Rife

DATE REQUESTED 8/19/05

DELIVER TO Jim Rife

BUDGET CODE LQB 300.1.1.1.3.3

NEED BY DATE 8/19/05

JOB TICKET #

MMR #

MACHINE SHOP REQ. #

PO #

PURCHASE RELEASE #

OTHER

PARTS STATUS (CHECK ONE)

- ☐ DEFECTIVE PARTS ISSUED
- ☐ PARTS SCRAPPED
- ☐ A/R ITEMS
- ☐ DEFECTIVE ASSEMBLY
- ☐ MISSING FROM KIT ALREADY ISSUED
- ☒ INDIVIDUAL PARTS
- ☐ CONSUMABLES
- ☐ PARTS LOST

ACQUISITIONER SIGNATURE M Schmidt CA **ID#** 4223 **DATE** 8/19/05

PLEASE INDICATE REVISION REQUIRED

	LOCATION	PART #	REV	QTY	UOM	DESCRIPTION	RF #	SIR #
6	R1,3,2	MC-390879	0	2	Each	Heat Exchanger Weld Fitting	83545	
6	R1,3,3	MC-390881	0	2	Each	Cooldown Line Weld Fitting	83546	
6	~~LCB~~ ? R1,3,3	MC-390883	0	2	Each	Pumping Line Extension Weld Fitting	83457	

STOCKROOM SIGNATURE [illegible] **ID#** 11939 **DATE** 19 August 2005

PARTS DELETED FROM DATABASE **ID#** **DATE**

A COPY OF THIS FORM IS TO BE INCLUDED IN WITH THE TRAVELER

PARTS RECEIVED BY [illegible] **ID#** 4895 **DATE** 8/19/05

Subject: Q2 4.5K lines
From: Tom Page <tpage@fnal.gov>
Date: Fri, 26 Aug 2005 08:48:30 -0500
To: Rife Jim <jrife@fnal.gov>, Damon Bice <dbice@fnal.gov>, Gould Steve <sgould@fnal.gov>
CC: tpage@fnal.gov, Nicol Tom <tnicol@fnal.gov>, Jim Kerby <kerby@fnal.gov>, Pfund Phil <pfund@fnal.gov>

All,

Use only two 4.5 K lines in the Q2-6 rebuild. These tubes will go in the center two holes.

Thanks.

-Tom

--
Thomas Page
Fermi National Accelerator Laboratory
TD/Engineering & Fabrication
P.O. Box 500, MS 316
Batavia, IL 60510
phone: 630.840.8019
fax: 630.840.8036
http://tdserver1.fnal.gov/page/thomas

Cryogenic Thermometer Traveller

DESCRIPTION

Part description:	Cryogenic thermometer	**Top Assembly Identification:**	~~TT8332~~ LQXB-Q6-1 Q2B Inst. Bus side
Part Identification:	HCQITESCXT-CR000870		
Serial Number:	CX_LS_X13879	**Manufactured By:**	

CABLING

Connector Tag Name TT8332

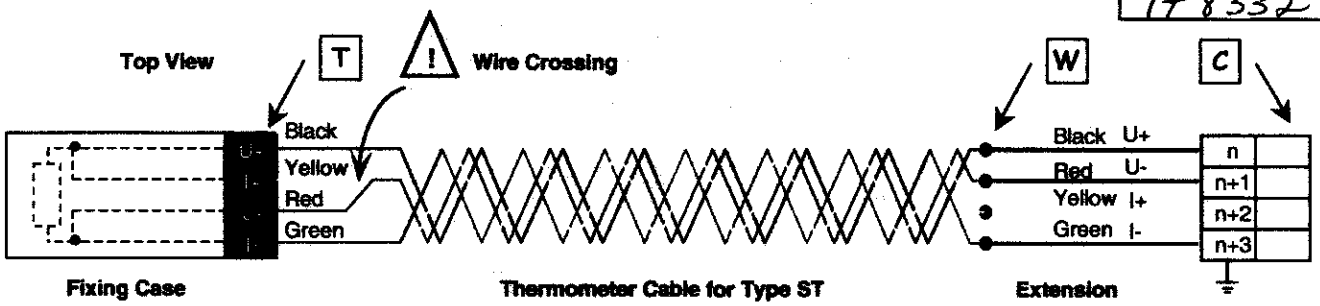

Fixing Case

Thread ☐
Hole ☐
Stud ☐

Thermometer Cable for Type ST

ρ (300 K) = 0.32 Ohm/m
Copper AWG 30
Length = ☐ m

Extension

ρ (300 K) = 0.07 Ohm/m
Copper AWG 24
Length: 0.8 m

CHECKS

Intervention	Date/ DD-MMM-YYYY	Check Point	R(U+,U-,I+,I-) [Ohm] 4W	R(U-,I-) [Ohm] 2W	R(U+,I+) [Ohm] 2W	R(U+,GND) [Ohm] 2W	Temperature [K]	Firm/Laboratory	Checked by
Calibration	*07-May-2001*	T	*60.1*	*0.18*	*0.18*	*OVL*	*Ambient*	*IPN*	*Joly*
Expedition	*15-Oct-2002*	T	*59.31*	*0.18*	*0.18*	*OVL*	*295*	*CERN*	*Vauthier*
Reception	7-15-05	T W C	59.084				79°	Fermi	LISA
		T W C							
		T W C							
		T W C							
		T W C							
		T W C							
		T W C							
		T W C							
		T W C							
		T W C							
		T W C							
		T W C							
		T W C							
		T W C							
		T W C							
		T W C							
		T W C							
		T W C							
		T W C							
		T W C							
		T W C							
		T W C							
		T W C							
		T W C							

Cryogenic Thermometer Traveller

DESCRIPTION

Part description:	Cryogenic thermometer	**Top Assembly Identification:**	~~TT8342~~ LQXB 16-1 Q2b NON-Bus Side
Part Identification:	HCQITESCXT-CR000850		
Serial Number:	CX_LS_X13876	**Manufactured By:**	

CABLING

Connector Tag Name TT8342

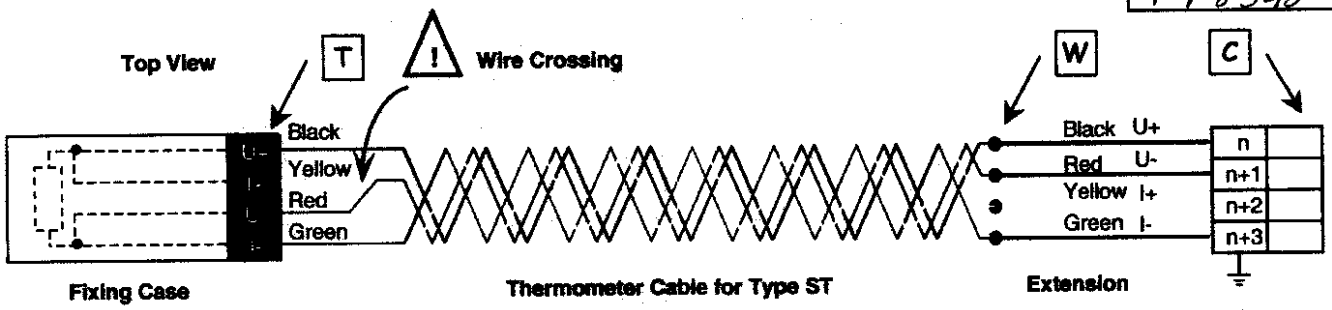

Fixing Case

Thread ☐
Hole ☐
Stud ☐

Thermometer Cable for Type ST

ρ (300 K) = 0.32 Ohm/m
Copper AWG 30
Length = ☐ m

Extension

ρ (300 K) = 0.07 Ohm/m
Copper AWG 24
Length: 0.8 m

CHECKS

Intervention	Date/ DD-MMM-YYYY	Check Point	R(U+,U-,I+,I-) [Ohm] 4W	R(U-,I-) [Ohm] 2W	R(U+,I+) [Ohm] 2W	R(U+,GND) [Ohm] 2W	Temperature [K]	Firm/Laboratory	Checked by
Calibration	*07-May-2001*	T	*60.00*	*0.18*	*0.18*	*OVL*	*Ambient*	*IPN*	*Joly*
Expedition	*15-Oct-2002*	T	*59.49*	*0.18*	*0.18*	*OVL*	*295*	*CERN*	*Vauthier*
Reception		T W C	59.054				79°	Fermi	LSA
		T W C							
		T W C							
		T W C							
		T W C							
		T W C							
		T W C							
		T W C							
		T W C							
		T W C							
		T W C							
		T W C							
		T W C							
		T W C							
		T W C							
		T W C							
		T W C							
		T W C							
		T W C							
		T W C							
		T W C							
		T W C							
		T W C							
		T W C							

Cryogenic Thermometer Traveller

DESCRIPTION

Part description:	Cryogenic thermometer	**Top Assembly Identification:**	LQXB Q6-1 Q2A Inst. Bus Side
Part Identification:	HCQITESCXT-CR000860		
Serial Number:	CX_LS_X13878	**Manufactured By:**	

CABLING

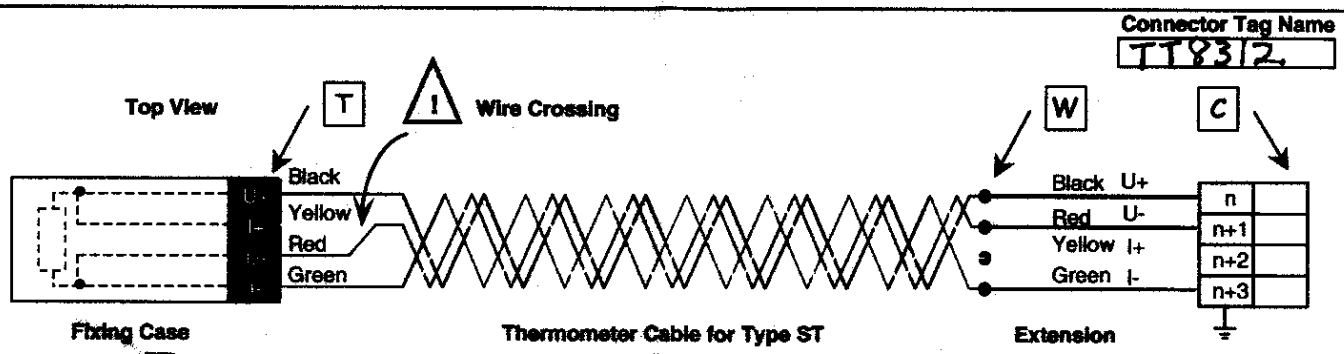

Fixing Case
Thread ☐
Hole ☐
Stud ☐

Thermometer Cable for Type ST
ρ (300 K) = 0.32 Ohm/m
Copper AWG 30
Length = ☐ m

Extension
ρ (300 K) = 0.07 Ohm/m
Copper AWG 24
Length: 0.8 m

CHECKS

Intervention	Date/ DD-MMM-YYYY	Check Point	R(U+,U-,I+,I-) [Ohm] 4W	R(U-,I-) [Ohm] 2W	R(U+,I+) [Ohm] 2W	R(U+,GND) [Ohm] 2W	Temperature [K]	Firm/Laboratory	Checked by
Calibration	*07-May-2001*	T	*57.50*	*0.18*	*0.18*	*OVL*	*Ambient*	*IPN*	*Joly*
Expedition	*15-Oct-2002*	T	*56.86*	*0.18*	*0.18*	*OVL*	*295*	*CERN*	*Vauthier*
Reception	7-15-05	T W C	56.537				79°	Fermi	L.SA
		T W C							
		T W C							
		T W C							
		T W C							
		T W C							
		T W C							
		T W C							
		T W C							
		T W C							
		T W C							
		T W C							
		T W C							
		T W C							
		T W C							
		T W C							
		T W C							
		T W C							
		T W C							
		T W C							
		T W C							
		T W C							
		T W C							
		T W C							
		T W C							

Cryogenic Thermometer Traveller

DESCRIPTION

Part description:	Cryogenic thermometer	**Top Assembly Identification:**	LQXB - Ø6 - 1 Q2A NON - Bus Side
Part Identification:	HCQITESCXT-CR000880		
Serial Number:	CX_LS_X13881	**Manufactured By:**	

CABLING

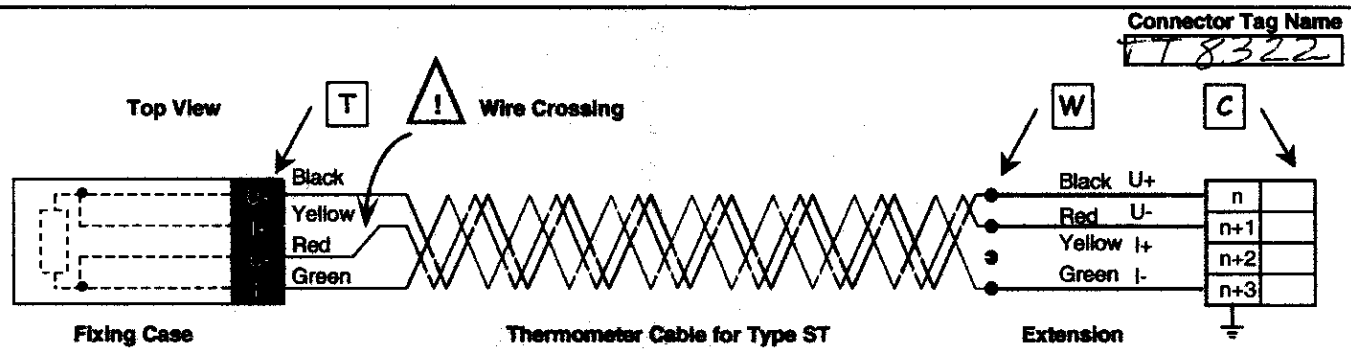

Fixing Case

Thread ☐
Hole ☐
Stud ☐

Thermometer Cable for Type ST

ρ (300 K) = 0.32 Ohm/m
Copper AWG 30
Length = ☐ m

Extension

ρ (300 K) = 0.07 Ohm/m
Copper AWG 24
Length: 0.8 m

CHECKS

Intervention	Date/ DD-MMM-YYYY	Check Point	R(U+,U-,I+,I-) [Ohm] 4W	R(U-,I-) [Ohm] 2W	R(U+,I+) [Ohm] 2W	R(U+,GND) [Ohm] 2W	Temperature [K]	Firm/Laboratory	Checked by
Calibration	*07-May-2001*	T	*57.1*	*0.18*	*0.18*	*OVL*	*Ambient*	*IPN*	*Joly*
Expedition	*15-Oct-2002*	T	*56.48*	*0.18*	*0.18*	*OVL*	*295*	*CERN*	*Vauthier*
Reception	7-15-05	T W C	56.313				79°	Fermi	LSA
		T W C							
		T W C							
		T W C							
		T W C							
		T W C							
		T W C							
		T W C							
		T W C							
		T W C							
		T W C							
		T W C							
		T W C							
		T W C							
		T W C							
		T W C							
		T W C							
		T W C							
		T W C							
		T W C							
		T W C							
		T W C							
		T W C							
		T W C							
		T W C							

Traveler Title:	Specification No:	Revision:	DR No:
LHC Q2 LQXB Cryostat Shipping Traveler	333732	B	4231

Step No:	Drawing No:	Routing Form No:	Serial No:	Rework ID:
7.0	ME-390710		LQXB06	0

Discrepancy Description:

An open strip heater was found on the Q2A cold mass. It is on the non-lead end of MQXB07 and between quadrants 1-4. The heater strip is completely torn off on the quadrant 4 side on the jumper.

Originator: Steve Gould

Date: 4/20/2005

Cause of Nonconformance:

Thermal cycling during a firing of the heater caused the end of the heater strip to detach at a point where it had been weakened by folding.

Responsible Authority: Andy Hocker

Date: 4/21/2005

Disposition:

The G-10 collet surrounding the heater strip will be hollowed out, exposing unfolded bare sections of heater strip for quadrants 1 and 4 to which a new jumper wire will be soldered. Excess heater strip will be cut off and the hollowed-out sections will be filled with green putty. All subsequent 5 kV heater hipots for this magnet should be limited to 2 kV. (Re-issue Yoke & Skinning - 333497, Final Cold Mass Assembly - 333498, Q2 Module Assembly - 333643 and Q2 Cryostat Final Assembly - 333644. - John Szostak 4/21/05) The following was added on 6/21/05 by Rodger Bossert: Subsequently, the heater in question shorted to ground within the magnet. The shorted leg of the heater should be removed from the system (jumpered), grounded, and replaced with another single strip. This strip will be cut from a full length, regular quench heater and inserted into a full length G-11 tube (identical, except in length, to the Q1/Q3 instrumentation tube assemblies). The tube will be inserted into one of the rectangular holes in the yoke. Two inches are to be cut from each end of the replacement strip, and a 20 ga. wire is to be soldered longitudinally to the remainder of the exposed copper pad at each end as in sketch #1. Slide a G-11 protective cover assembly over the end, with the slot over the strip heater and the 20 ga wire through the hole as shown in sketch #2. Pack the slots on both ends with green putty, but not the hole. The G-11 tube should be terminated at the outside surface of the end plate on each end, with each end inserted into a stainless sleeve that has been welded to the end plate (the same way it is done on Q1's and Q3's). Glue the G-11 tube into the stainless sleeve on the non-lead end and let it freely slide within the sleeve on the lead end. The exterior end of the G-11 protective cover should be positioned longitudinally about one inch inside the exterior surface of the end plate on the lead end. The wire from the strip can then be attached to the instrumentation bundle as it exits the end plate. Make sure there is enough slack in the wire for thermal expansion. On the non-

Responsible Authority: Andy Hocker

Date: 4/21/2005

Corrective Action to Prevent Recurrence:

All heater strip connections made subsequent to the discovery of this failure mode were/will be fashioned according to the above disposition, as well as the remaining three heater strip connections on MQXB07.
Disposition verify notes: (TRR No. 1708)

Responsible Authority: Andy Hocker

Date: 4/21/2005

Corrective Action/Disposition Verified By: John Szostak

Date: 7/27/2005 10:48:33 AM

Will Configuration be affected?: ☐ YES ☑ NO

Identified problem area:

☐ Material ☐ Manpower ☑ Method ☐ Machine ☐ Measurement

Reviewed By: Bob Jensen

Date: 8/2/2005

Traveler Title:	Specification No:	Revision:	DR No:
Q2 LQXB Cryostat Final Assembly Traveler	5520-TR-333644	F	4283

Step No:	Drawing No:	Routing Form No:	Serial No:	Rework ID:
5.11	333644	N/A	LQXB06	1

Discrepancy Description:

During the welding of the heat exchanger extension pipe the gap and weld prep between the pipes was questioned and determined to be insufficient. Approximately 5 inches of weld has been applied.

Originator: Jim Rife

Date: 8/19/2005 1:48:00 PM

Cause of Nonconformance:

Tubes did not have proper weld prep. The backing strips moved during tack welding and the tubes butted together.

Responsible Authority: Thomas Page

Date: 8/19/2005 2:14:46 PM

Disposition:

Unweld the heat exchanger tube sections. Add a beveled weld prep to the ends of the tube sections to be welded together. Tack weld the backing strips in place to prevent movement when tacking the tube sections together.

Responsible Authority: Thomas Page

Date: 8/19/2005 2:14:46 PM

Corrective Action to Prevent Recurrence:

Prior to assembling the tube sections on a Q2 rebuild, ensure the weld prep is on the tubes. If there is no weld prep, add a weld prep to the tubes. Also, tack weld the backing strips in place prior to tack welding the tubes. Add these steps to the rebuild travelers.
Closeout notes: TRR1799 Bob Jensen 1/11/06

Responsible Authority: Thomas Page

Date: 8/19/2005 2:14:46 PM

Corrective Action/Disposition Verified By: Jim Rife

Date: 11/9/2005 10:15:19 AM

Will Configuration be affected?: ☐ YES ☑ NO

Identified problem area:

☐ Material ☐ Manpower ☑ Method ☐ Machine ☐ Measurement

Reviewed By: Bob Jensen

Date: 1/11/2006 3:18:10 PM

Revision Request Control Number: 1799

Specification Number: 5520 - TR - 333644 Current Revision: H

Traveler or Document Title Q2 LQXB Cryostat Final Assembly Traveler

Step #/Description of Revision:

Prior to assembling the tube sections on a Q2 rebuild, ensure the weld prep is on the tubes. If there is no weld prep, add a weld prep to the tubes. Also, tack weld the backing strips in place prior to tack welding the tubes. Add these steps to the rebuild travelers.

Bob Jensen	Bob Jensen	1/11/2006
Originator	Responsible Authority	Date
Revision Incorporated into the Traveler:		
	Revision Incorporated By	Date
Process Engineering Final Review:		
	Process Engineering/Designee	Date

Instructions for the completion of the Revision Request Form

Note(s):

Multiple steps may be effected by one Revision Request Form but only one specific Traveler or Document may be effected by each Revision Request Form.

If completing this form by hand, a Revision Request Control Number must be obtained before processing.

If completing this form entirely by electronic means, the printed copy to be filed in the Process Engineering Office is to be initialed by the individual incorporating the Revision Request and the individual who reviewed the Traveler or Document.

Originator Instructions:

1) Specification Number: - Enter the Specification Number of the Traveler or Document to be revised. (Document title is inserted automatically from the spec. #)

2) Current Revision: - Enter the Revision of the Traveler or Document to be revised.

3) Step# / Description of the Revision: - Enter a description of the revision to be made and the step# it applies to, if applicable. If needed to describe the revision attach a copy of the page(s). If the revision is coming from a related document such as a Discrepancy Report or an Engineering Order attach a copy of that document to the Revision Request Form.

4) Originator: - Originator is the person generating the form. (Select Name from List)

5) Responsible Authority: - Responsible Authority is person responsible for the process in question. (Select Name from List)

Process Engineering Office Instructions:

1) Revision Incorporated into the Traveler: - Signature of the individual who incorporated the revision.

2) Process Engineering Final Review: - Review the Traveler or Document revised, sign and date the form. The original completed Revision Request Form will be retained by the Process Engineering Office in the Revision Request Binder.

Revision Request Control Number: 1749

Specification Number: 5520 - TR - 333644 Current Revision: G

Traveler or Document Title Q2 LQXB Cryostat Final Assembly Traveler

Step #/Description of Revision:

4.3 Modified Step. Changed to "Install the "Top" Suspension System Adjusting Screws (MB-390039) and the "Bottom" (C936 Bearing Bronze) Suspension System Adjusting Screws (MB-390878), M16 Screw and washer into the Vacuum Vessel to hold the Fixed Support Assembly in place. Coat all screw threads with Molybdenum disulfide prior to installation." Per DR No. 4214.

4.17 Modified Step. Changed to "Establish alignment between the Cold Mass and the Support system per Q2 Cryostat Assembly Internal Piping (ME-390208)." per LQXB09.

7.11 Modified Step. Changed to "At the Q2a end, measure and mark 1m 411.8 mm [55.58 in.] of the lead as per Q2 Module Assembly Q2a Lead End (ME-369895, sheet 3 of 4). Have Crew Chief verify the length and sign below." Per DR No. 4165

7.12 Added Step. "At the Q2a end, measure 1m 411.8 mm [55.58 in.] and cut the lead at the mark as per Q2 Module Assembly Q2a Lead End (ME-369895, sheet 3 of 4). Have a Weldor fuse the ends of the Superconducting Cable before shipping Magnet." Per DR No. 4165

7.13 Modified Step. Changed to "At the Q2b end, measure and mark 511.8 mm [20.15 in.] of the lead as per Q2 Module Assembly Q2b Lead End Details (ME-369895, sheet 2 of 4). Have Crew Chief verify the length and sign below." Per DR No. 4165

7.14 Added Step. "At the Q2b end, measure 511.8 mm [20.15 in.] and cut the lead at the mark as per Q2 Module Assembly Q2b Lead End Details (ME-369895, sheet 2 of 4). Have a Weldor fuse the ends of the Superconducting Cable before shipping Magnet." Per DR No. 4165.

8.0 Modified Steps. Added Step Numbers and instructions to each individual signoff.

8.2 Modified Step. Changed Table per LQXB09. (New Step 8.13).

John Szostak	Jim Rife	6/14/2005
Originator	Responsible Authority	Date
Revision Incorporated into the Traveler:	John Szostak	10/24/2005
	Revision Incorporated By	Date
Process Engineering Final Review:	Bob Jensen	10/24/2005
	Process Engineering/Designee	Date

Instructions for the completion of the Revision Request Form

Note(s):

Multiple steps may be effected by one Revision Request Form but only one specific Traveler or Document may be effected by each Revision Request Form.

If completing this form by hand, a Revision Request Control Number must be obtained before processing.

If completing this form entirely by electronic means, the printed copy to be filed in the Process Engineering Office is to be initialed by the individual incorporating the Revision Request and the individual who reviewed the Traveler or Document.

Originator Instructions:

1) Specification Number: - Enter the Specification Number of the Traveler or Document to be revised. (Document title is inserted automatically from the spec. #)

2) Current Revision: - Enter the Revision of the Traveler or Document to be revised.

3) Step# / Description of the Revision: - Enter a description of the revision to be made and the step# it applies to, if applicable. If needed to describe the revision attach a copy of the page(s). If the revision is coming from a related document such as a Discrepancy Report or an Engineering Order attach a copy of that document to the Revision Request Form.

4) Originator: - Originator is the person generating the form. (Select Name from List)

5) Responsible Authority: - Responsible Authority is person responsible for the process in question. (Select Name from List)

Process Engineering Office Instructions:

1) Revision Incorporated into the Traveler: - Signature of the individual who incorporated the revision.

2) Process Engineering Final Review: - Review the Traveler or Document revised, sign and date the form. The original completed Revision Request Form will be retained by the Process Engineering Office in the Revision Request Binder.