Document ID: 3328

Q2 LQXB Cryostat Final Assembly Traveler

333644 / Rev. D

Job No:	**248**
E + F Project/Task No.:	**300/1.1.1.6.2**
M + S Project/Task No.:	**300/1.1.1.6.2**

Place This Side Down For Scanning!!!

LQXB08-0

Document ID:

3328

Job No.:

248

Project/Task No.

300/1.1.1.6.2

Series:

LQXB

Serial No:

LQXB08

Rework ID:

0

Specification No.:

333644

Revision:

D

LQXB08-0

Fermi National Accelerator Laboratory
Batavia, IL 60510

LARGE HADRON COLLIDER
Q2-LQXB
CRYOSTAT FINAL ASSEMBLY TRAVELER

Reference Drawing(s):
Vacuum Vessel and Cryostat Assembly
(ME-390206)

Project/Task Number: *300/1.1.1.6.2*

Released By: *John Szostak* | **Magnet/Device Series:** *LQXB*

Date Issued: *10/29/2004 4:02:08 PM* | **Scanned Pages:** 53

Prepared by: J. Szostak

Title	Signature	Date
TD / E&F Process Engineering	*Bob Jensen* Bob Jensen / Designee	*2/2/04*
TD / LHC Production Supervisor	*Jim Rife* Jim Rife / Designee	*2/2/04*
TD / LHC Production Engineer	*Rodger Bossert* Rodger Bossert / Designee	*2/2/04*
TD / LHC Production Engineer Cryostat	*Tom Page* Tom Page / Designee	*2/2/04*
TD / LHC Project Engineer Cryostat	*Tom Nicol* Tom Nicol / Designee	*2/2/04*
TD / LHC Program Manager	*Jim Kerby* Jim Kerby / Designee	*2/2/04*

Revision Page (1 of 3)

Revision	Step No.	Revision Description	TRR No.	Date
None	N/A	Initial Release	N/A	6/17/02
A	3.1	Removed Step. Not necessary.	1485	10/2/02
	3.2	Modified Step. Changed to "Add Insertion Rails per Vacuum Vessel Assembly (ME-390129)."		
	4.1	Modified Step. Added "Suspension System Adjusting Screw, M16 x 70mm SHCS and Washer" to the Parts table.		
	4.3	Modified step. "Install the Suspension System Adjusting Screws (MB-390039), M16 Screw and washer into the Vacuum Vessel to hold the Fixed Support Assembly in place. Coat all screw heads with Molybdenum disulfide prior to installation."		
	4.6	Modified step. "Install the Suspension System Adjusting Screws (MB-390039), M16 Screw and washer into the Vacuum Vessel to hold the Sliding Support Assemblies in place. Coat all screw heads with Molybdenum disulfide prior to installation."		
	4.11	Modified Step. "Slide the Suspension System over the Cold Mass and place on tooling. The Suspension system may be disassembled during this step. Record shim sizes and locations prior to disassembly." New Step 4.13.		
	5.1	Added Step. "Place the Cold mass assembly on the insertion rail system."		
	5.3	Added Step. "Install Cold mass Insulation per Cold mass Insulation Installation (ME-390302)."		
	5.5	Added Step. "Using Pipe Supports as a template, cut the blankets around the Pipe Support Feet and slit blankets circumferentially at the Pipe Supports."		
	5.6	Added Step. "Remove Pipe Supports and blankets. Wrap blankets in plastic bag to keep clean for later use. Label blankets as they are removed for later positioning."		
	5.7	Added Step. "Install Pipe Supports to same location as in step 5.4."		
	5.16	Added Step. "Weld the Pipe Support Gussets to the Cold mass per Q2 Piping Assembly (ME-390208)."		
	6.0	Modified Steps per Tom Page.		
	7.1	Modified Steps per Tom Page.		
	7.2	Modified Steps per Tom Page.		
	7.3	Modified Steps per Tom Page.		
	7.4	Modified Steps per Tom Page.		
	7.5	Modified Steps per Tom Page.		
B	4.1	Modified Step. Changed to "Label the IP End and the Non-IP End of the Vacuum Vessel with a temporary sticker or equivalent." per Jim Rife.	1539	7/17/03
	5.0	Added Note "**Note(s): Do not use a strap wrench on the pipes.**" per **DR No. HGQ-0394.**		

Revision Page (2 of 3)

Revision	Step No.	Revision Description	TRR No.	Date
C	3.2	Added Step. "Inspect the transition area between the support sections and tube sections. Grind smooth if necessary."	1570	11/18/03
	3.3	Added Step. "Clean the Vacuum Vessel using a vacuum cleaner or equivalent."		
	3.8	Modified Step. Added "Tap out holes with M10 – 1.5 Tap. Move Vessel to Table."		
	4.9	Added Step. "Measure the distance between the Suspension Rings at the bottom of the Threaded Rods. Install Threaded Rods after measurements."		
	4.10	Modified Step. Moved "Configure the Suspension Tooling for Q2 Assembly per (ME-364604). Place Suspension Assembly on the tooling and make necessary adjusts to the tooling." to New step 4.11.		
	4.16	Modified Step. Added "Install shims between the Brass Slide Bars and the Stainless Steel Blocks on each support as needed. Record Shim size and location below." New Step 4.17.		
	5.0	Modified, rearranged and added steps from step 5.13 to 5.35, per Notes taken by Steve Gould and Tom Page on LQXB02.		
	5.8	Added Step. "Install Q2 Installation Tie Rod Assembly (MC-390635) and Tie Bar Retaining Clamp (MB-390136) as per Q2 Cryostat Assembly - Internal Piping (ME-390208)." per traveler LQXB03-0.		
	5.18	Modified Step. Changed Quantity from 2 ea to 4 ea. "...Pumping Line Pipe Stop (MB-390149), (4 ea.) and Cool Down Line Pipe Stop (MB-390150) (4 ea.)."		
	5.19	Modified Step. Changed Quantity from 2 ea to 4 ea. "...Pumping Line Pipe Stop (MB-390149), (4 ea.) and Cool Down Line Pipe Stop (MB-390150) (4 ea.)."		
	5.20	Modified Step. Changed Technician Signoff to Weldor Signoff.		
	5.21	Modified Step. Changed to "Clean the following parts fromQ2 Heat Exchanger Corrugated Tube Assembly (ME-390143)." Added Table. New step 5.35.		
	5.22	Modified Step. Moved to after Suspension System Adjusting Screws are installed. New Step 7.7		
	5.23	Modified Step. Moved to after Suspension System Adjusting Screws are installed. New Step 7.8		
	6.1	Moved Step. Moved to New Step 6.2. "Install the Cold mass MLI Blankets per (ME-390302) and in the same position as Step 5.6." Cannot Lift Cold Mass with Blankets installed.		
	6.2	Moved Step. Moved to New Step 6.1. "Lift the Cold Mass Assembly and place the Center Section (ME-390164) and End Sections (ME-390162) on the Insertion Rails. Lower the Cold mass back onto the rails ensuring the holes in the Shield Sections line up with Support Rollers."		
	7.8	Removed Step. " Install the Conflat flanges with copper gaskets on the Vacuum Vessel as per the General Assembly (ME-390000)." Conflat Flanges installed in IB#1.		

Revision Page (3 of 3)

Revision	Step No.	Revision Description	TRR No.	Date
D	Cover Page	Modified. Added signoff for Rodger Bossert for Final Electrical Steps in traveler.	1586	2/2/04
	3.1	Added Step. "Record the Vacuum Vessel Serial Number." per Jim Rife.		
	4.9	Modified Step. Moved to after Leak Checks. (New Step 5.34)		
	4.11	Modified Step. Changed ½" to 2" per Steve Gould.		
	5.8	Added Step. "Install Q2 Installation Tie Rod Assembly (MC-390635) and Tie Bar Retaining Clamp (MB-390136) as per Q2 Cryostat Assembly - Internal Piping (ME-390208)."		
	5.15	Modified Step. Changed to Technician Signoff.		
	5.21	Removed Step. "Re-install the Threaded Rods and lock into place." per TR-333644, LQXB04.		
	5.22	Remove Step. "Perform a Stretched Wire Measurement." per TR-333644, LQXB04.		
	5.23	Removed Step. "Insert the Q2 Pumping Line Tube (MB-390147) and Q2 Cool Down Line Tube (MB-390146)." Completed in step 5.10.		
	5.24	Removed Step. "Weld Pumping Line End Flange (MA-390032) to the Q2 Pumping Line Tube (MB-390147)." Completed in step 5.12.		
	5.25	Removed Step. "Weld Cool Down Line End Flange (MA-390033) to the Q2 Cool Down Line Tube (MB-390146)." Completed in step 5.12.		
	6.9	Modified Step. Added "Tap the PEM nuts prior to installing shield. Use care in tightening screws so they don't break." per DR No. **HGQ-0441**.		
	7.6	Modified Step. Added Note. "**Note(s): Ensure proper lubrication on adjusting screws. Check threads on screw and vacuum vessel prior to assembly and fix if necessary.**"		
	8.0	Added Step. Added Final Electrical Inspection per Jim Rife.		

Ensure appropriate memos and specific instructions are placed with the traveler before issuing the sub traveler binder to production.

1.0 General Notes

1.1 All steps that require a sign-off shall include the Technician/Inspectors first initial and full last name.

1.2 No erasures or white out will be permitted to any documentation. All incorrectly entered data shall be corrected by placing a single line through the error, initial and date the error before adding the correct data.

1.3 All Discrepancy Reports issued shall be recorded in the left margin next to the applicable step.

1.4 All personnel performing steps in this traveler must have documented training for this traveler and associated operating procedures.

1.5 Personnel shall perform all tasks in accordance with current applicable ES&H guidelines and those specified within the step.

1.6 Cover the product/assembly with Green Herculite (Fermi stock 1740-0100) when not being serviced or assembled.

2.0 Parts Kit List

2.1 Attach the completed Parts Kit for this production operation to this traveler. Ensure that the serial number on the Parts Kit matches the serial number of this traveler. Verify that the Parts Kit received is complete.

J. Gontab
Process Engineering/Designee

10/29/04
Date

3.0 Vacuum Vessel Preparation and Painting

3.1 Record the Vacuum Vessel Serial Number.

Q2-3

TRR#163a

Technician(s) Date 10/30/04

3.2 Add Insertion Rails per Vacuum Vessel Assembly (ME-390129).

N/A

Technician(s) Date

3.3 Inspect the transition area between the support sections and tube sections. Grind smooth if necessary.

Technician(s) Date 10/30/04

3.4 Clean the Vacuum Vessel using a vacuum cleaner or equivalent.

Technician(s) Date 10/30/04

TRR# 170a 46a-046a

3.5 Attach sticker for Leak Check ~~the~~ Vacuum Vessel Assembly (ME-390003) per ES-107240~~, and record results in table below~~.

Part No.	DETERMINATION OF DETECTABLE LEAK						
	M.D.S. ÷ ((Response – Background) ÷ Leak value) = MDL						
OPERATOR'S LAST NAME	SCALE UNITS BEFORE HELIUM PROBE	SCALE UNITS WHILE ENCLOSURE FLOODING	MDS	Response	Background	Leak Value	MDL
						____ x E^{-8}	____ x E^{-}___

~~Inspector~~ Technician Date

3.6 Prepare the outside of the Vacuum Vessel (ME-390003) for painting by cleaning with Ethyl Alcohol (Fermi stock 1920-0550) and Kimwipes (Fermi stock 1660-2500) or equivalent.

Technician(s) Date 10-30-04

3.7 Mask the Stainless Steel Components of the Vacuum Vessel for painting.

Technician(s) Date 10-30-04

3.8 Prime the Vacuum Vessel using Rust-o-leum (Fermi stock 1825-4000).

E. [illegible] 10-30-04
Technician(s) Date

3.9 Verify that the Screws (MA-393036) will thread easily into the appropriate holes in the Vacuum Vessel (ME-390126). If necessary, tap out holes with M10 – 1.5 Tap. Move Vessel to Table.

A. [illegible] 10/30/04
Lead Person Date

3.10 Paint the Vacuum Vessel using Flambeau Red (Fermi stock 1825-3710).

Vacuum Vessel
(ME-390129)

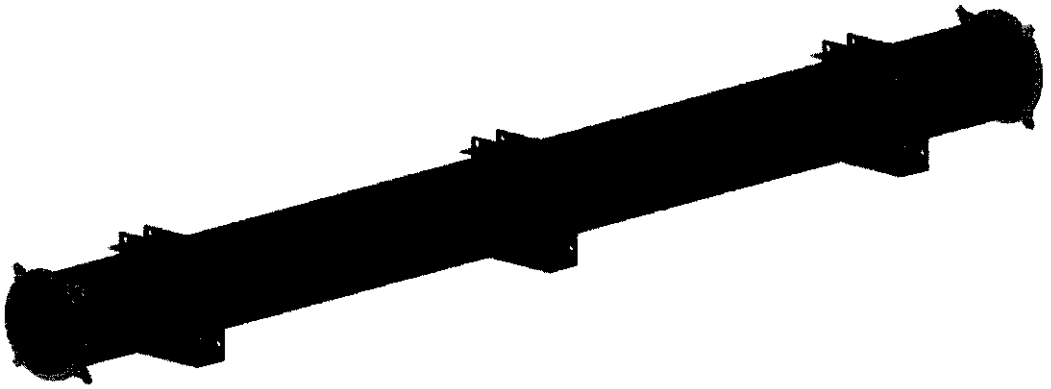

C. Fiano 11-01-04
Technician(s) Date

4.0 Suspension System

4.1 Clean the Suspension System with Ethyl Alcohol (Fermi stock 1920-0550) and Kimwipes (Fermi stock 1660-2500) or equivalent.

Part Name	Part Number	Quantity	Completed
Fixed Support Assembly	**(ME-390041)**	**1**	✓
Sliding Support Assembly	**(ME-390042)**	**2**	✓
Tie Bar Assembly	**(ME-390167)**	**4**	✓
Tie Bar Shim, .250"	**(ME-390118)**	**6**	✓
Tie Bar Shim, .093"	**(ME-390119)**	**6**	✓
Tie Bar Shim, .031"	**(ME-390120)**	**6**	✓
Suspension System Adjusting Screw	**(MB-390039)**	**12**	✓
M16 x 70mm SHCS	**(MA-393021)**	**12**	✓
Washer	**(MA-390377)**	**12**	✓

Label the IP End and the Non-IP End of the Vacuum Vessel with a temporary sticker or equivalent.

Technician(s) _____ Date 11-01-04

4.2 Insert the Fixed Support Assembly (ME-390041) into the vacuum vessel and position at the center support.

Technician(s) _____ Date 11-01-04

4.3 Install the Suspension System Adjusting Screws (MB-390039), M16 Screw and washer into the Vacuum Vessel to hold the Fixed Support Assembly in place. Coat all screw threads with Molybdenum disulfide prior to installation.

[redacted]

Technician(s) _____ Date 11-01-04

4.4 Adjust the Vertical and rotational alignment of the Supports using the Suspension System Adjusting Screws (MB-390039). Ensure all four screws are in contact with the Support and that Diametrically Opposing Support Lugs are equidistant from the Vacuum Vessel Wall.

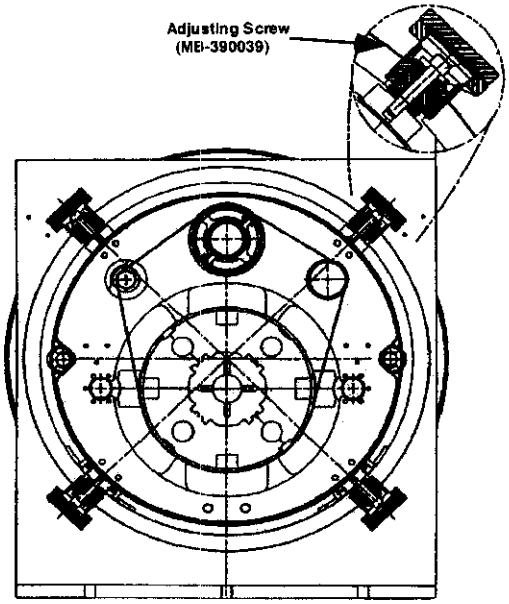

Technician(s) _____ Date 11-01-04

4.5 Insert the Sliding Support Assemblies (ME-390042) in to the Vacuum Vessel and position at each of the outboard support sections.

Technician(s) _____ Date 11-1-04

4.6 Install the Suspension System Adjusting Screws (MB-390039), M16 Screw and washer into the Vacuum Vessel to hold the Fixed Support Assembly in place. Coat all screw threads with Molybdenum disulfide prior to installation.

[redacted]

Technician(s) _____ Date 11-01-04

4.7 Adjust the Vertical and rotational alignment of the Supports using the Suspension System Adjusting Screws (MB-390039). Ensure all four screws are in contact with the Support and that Diametrically Opposing Support Lugs are equidistant from the Vacuum Vessel Wall.

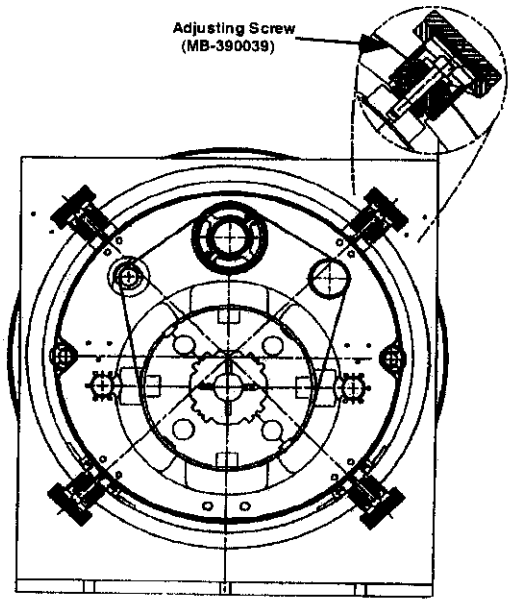

Technician(s) _____ Date 11-01-04

4.8 Assemble the Suspension System using the Fixed Support Assembly (ME-390041), the Sliding Support Assemblies (ME-390042) and the Tie Bar Assemblies (MC-390167). Insert Tie Bar Shims (MC-390118),(MB-390119) and (MB-390120) between the Sliding Support Assemblies (ME-390042) and the Tie Bar Assemblies (MC-390167) as required. (Reference drawing: ME-390310)

C. Fraunfelter — Technician(s) — 11-01-04 — Date

4.9 Label the IP End Support and the Non-IP End Support. (Writing on the G-11 Support is acceptable).

C. Fraunfelter — Technician(s) — 11-01-04 — Date

4.10 Loosen each Suspension System Adjusting Screw (MB-390039) 2 turns and remove the Suspension System from the Vacuum Vessel.

Technician(s) — 11/1/04 — Date

4.11 Configure the Suspension Tooling for Q2 Assembly per (ME-364604). Place Suspension Assembly on the tooling and make necessary adjusts to the tooling.

Technician(s) — 11/15/04 — Date

4.12 Assemble the Outboard Suspension Mounting Brackets (MD-390280) to the Sliding Support Assemblies (outboard supports, ME-390042).

Technician(s) — 11/15/04 — Date

4.13 Assemble the Center Suspension Mounting Brackets (MD-390281) to the Sliding Fixed Assemblies (center support, ME-390041).

Technician(s) — 11/15/04 — Date

NW 177"

SW 177"

NE 177"

SE 176 7/8"

FROM STAINLESS PAD TO PAD FOR THREADED ROD.

S. Gould
11/2/04

4.14 Slide the Suspension System over the Cold Mass and place on tooling. The Suspension system may be disassembled during this step. Record shim sizes and locations prior to disassembly.

Note(s):

AFTER 4.14, ADD: Stretch wire

Ensure that the Suspension System is configured properly to the Cold Mass with respect to the IP and Non-IP Ends.

Technician(s) _____ Date 11/15/04

☐ Yes ☐ No

Rep, Author by Physics

TRR# 1709

X 4.15 Verify locking collars exist only at center support.

Lead Person _____ Date 11-20-04

4.16 Establish alignment between the Cold Mass and the Support system. Install shims between the Brass Slide Bars and the Stainless Steel Blocks on each support as needed.

Record Shim size and location below.

East-North	.040	**East-South**	.040
Center-North	.045	**Center-South**	.045
West-North	.030	**West-South**	.030

Technician(s) _____ Date 11-20-04

X 4.17 Verify the Alignment of the Cold Mass and the Support System.

Crew Chief _____ Date 11/20/04

4.18 Weld the Cold Mass to the Outboard Cold Mass Brackets as per (ME-390310).

Weldor(s) _____ Date 11-23-04

5.0 Piping Assembly

Note(s):

Do not use a Strap Wrench on the Pipes.

5.1 Place the Cold Mass Assembly on the insertion rail system.

Technician(s) _____ Date 11-29-04

5.2 Clean the Pipe Supports with Ethyl Alcohol (Fermi stock 1920-0550) and Kimwipes (Fermi stock 1660-2500) or equivalent.

Technician(s) _____ Date 11-29-04

5.3 Install Cold mass Insulation per Cold mass Insulation Installation (ME-390302).

Technician(s) _____ Date 11-30-04

5.4 Install the Pipe Supports (MD-390258)(Qty. 4) on the Cold Mass per (ME-390208).

Note(s):

A Tie Bar may be disconnected, if necessary, from the Fixed Support Assembly to install the central two pipe supports.

PIPE SUPPORT ASSEMBLY

Technician(s) _____ Date 12-1-04

5.5 Using Pipe Supports as a template, cut the blankets around the Pipe Support Feet and slit blankets circumferentially at the Pipe Supports.

Technician(s) _____ Date 12-1-04

5.6 Remove Pipe Supports and blankets. Wrap blankets in plastic bag to keep clean for later use. Label blankets as they are removed for later positioning.

Technician(s) _____ Date 12-1-04

5.7 Install Pipe Supports to same location as in step 5.4.

Technician(s) _____ Date 12-1-04

5.8 Install Q2 Installation Tie Rod Assembly (MC-390635) and Tie Bar Retaining Clamp (MB-390136) as per Q2 Cryostat Assembly - Internal Piping (ME-390208).

Technician(s) _____ Date 12-2-04

5.9 Clean the Q2 Heat Exchanger Outer Shell (MD-390145), Q2 Pumping Line Tube (MB-390147) and the Q2 Cool Down Line Tube (MB-390146) with Ethyl Alcohol (Fermi stock 1920-0550) and Kimwipes (Fermi stock 1660-2500) or equivalent.

Technician(s) _____ Date 12-3-04

5.10 Slide the Q2 Heat Exchanger Outer Shell (MD-390145), Q2 Pumping Line Tube (MB-390147) and the Q2 Cool Down Line Tube (MB-390146) through all seven supports.

Note(s):

Ensure the cross over hole in the Heat Exchanger Pipe is lined up with the hole in the Cold Mass Center Tube.

Technician(s) _____ Date 12-3-04

5.11 Clean the Pumping Line Flanges (MB-390032), the Cool Down Line Flanges (MB-390033) and the Heat Exchanger Outer Shell Flanges (MB-390031) with Ethyl Alcohol (Fermi stock 1920-0550) and Kimwipes (Fermi stock 1660-2500) or equivalent.

Technician(s) _____ Date 12-3-04

5.12 Weld the Heat Exchanger Outer Shell Flanges (MB-390031), the Pumping Line Flanges (MB-390032) and the Cool Down Line Flanges (MB-390033) to the ends of the corresponding pipes.

Weldor(s) _____ Date 12/4/04

5.13 Clean the Cold Mass and the Retainer Clips (MA-390103) with Ethyl Alcohol (Fermi stock 1920-0550) and Kimwipes (Fermi stock 1660-2500) or equivalent.

Technician(s) _____ Date 12/2/04

TRR#1639 MOVE TO AFTER 5.7

5.14 Weld the Retainer Clips (MA-390103) to the Cold Mass Outer Shell as per the Pipe Support Assembly (ME-390087) or (ME-390208).

Weldor(s) _____ Date 12/2/04

5.15 Clean the Pipe Support Gussets with Ethyl Alcohol (Fermi stock 1920-0550) and Kimwipes (Fermi stock 1660-2500) or equivalent.

N/A (DONE ON Q2A when USED ON LQXB-02)

Technician(s) Date

5.16 Weld the Pipe Support Gussets to the Cold mass per Q2 Piping Assembly (ME-390208).

N/A (DONE ON Q2A when USED ON LQXB-02)

Weldor(s) Date

5.17 Clean the Heat Exchanger Connection (MC-390111) with Ethyl Alcohol (Fermi stock 1920-0550) and Kimwipes (Fermi stock 1660-2500) or equivalent.

Technician(s) _____ Date 12-3-04

5.18 Install the Connector (Heat Exchanger to Cold Mass) (MC-390111). Verify alignment and then purge Cold Mass and Q2 Heat Exchanger Outer Shell (MD-390145), with Argon Gas.

Technician(s) _____ Date 12-3-04

5.19 Weld the Connector (Heat Exchanger to Cold Mass) (MC-390111) to the Q2 Heat Exchanger Outer Shell (MD-390145) and to the Cold Mass Center Tube per (ME-390208, Section F-F).

Weldor(s) _____ Date 12/4/04

5.20 Insert 4.5K Intercept Line Pipes per (ME-390208).

Technician(s) _____ Date 12-3-04

5.21 Pressure test the Cold Mass Assembly at 375 psi Nitrogen per Section 5034 of the Fermilab ES&H Manual and UG-100 of the Code.

Warning:

The test is to be performed after normal working hours and only personnel directly involved with the test will be present.

Inspector _____ Date 12-7-04

5.22 Leak Check the Cold Mass Assembly. (This will include the Exchanger Outer Shell).

Part No. MSLD #300521	DETERMINATION OF DETECTABLE LEAK						
	M.D.S. ÷ ((Response – Background) ÷ Leak value) = MDL						
OPERATOR'S LAST NAME	SCALE UNITS BEFORE HELIUM PROBE	SCALE UNITS WHILE ENCLOSURE FLOODING Cold MASS	MDS	Response	Background	Leak Value	MDL
	60X1	60X1	2	56X5	60X1	2.88 x E-8	2.5 x E-10

Inspector _____ Date 12-14-04

TAR# 1709

5.23 Clean the Pumping Line Pipe Stop (MB-390149), (4 ea.) and the Cool Down Line Pipe Stop (MB-390150) (4 ea.) with Ethyl Alcohol (Fermi stock 1920-0550) and Kimwipes (Fermi stock 1660-2500) or equivalent.

Technician(s) _____ Date 12/3/04

5.24 Weld the Pumping Line Pipe Stop (MB-390149), (4 ea.) and Cool Down Line Pipe Stop (MB-390150) (4 ea.) on the Pumping Line and Cool Down Lines.

Weldor(s) _____ Date 12/4/04

5.25 Weld the fixed collar to the 4.5k Intercept Line Tube (MB-390204) per (ME-390208).

Weldor(s) _____ Date 12/4/04

Line Pressure Test Per Form 21

5.26 Leak Check the Cool Down Line Tube (MB-390146).

Part No.	DETERMINATION OF DETECTABLE LEAK						
	M.D.S. ÷ ((Response – Background) ÷ Leak value) = MDL						
OPERATOR'S LAST NAME	SCALE UNITS BEFORE HELIUM PROBE	SCALE UNITS WHILE ENCLOSURE FLOODING	MDS	Response	Background	Leak Value	MDL
GAW	42X1	42X1	2	46X5	42X1	2.08 xE-8	3.1 xE-10

D. GAW
Inspector

12-13-04
Date

5.27 Leak Check the Q2 Pumping Line Tube (MB-390147).

Part No.	DETERMINATION OF DETECTABLE LEAK						
	M.D.S. ÷ ((Response – Background) ÷ Leak value) = MDL						
OPERATOR'S LAST NAME	SCALE UNITS BEFORE HELIUM PROBE	SCALE UNITS WHILE ENCLOSURE FLOODING	MDS	Response	Background	Leak Value	MDL
GAW	40X1	40X1	2	46X5	40X1	2.08 xE-8	3.1 xE-10

D. GAW
Inspector

12-13-04
Date

5.28 Leak check 4.5k Intercept Lines Tubes (MB-390204).

Part No.	DETERMINATION OF DETECTABLE LEAK						
	M.D.S. ÷ ((Response – Background) ÷ Leak value) = MDL						
OPERATOR'S LAST NAME	SCALE UNITS BEFORE HELIUM PROBE	SCALE UNITS WHILE ENCLOSURE FLOODING	MDS	Response	Background	Leak Value	MDL
GAW	42X1	42X1	2	46X5	42X1	2.08 xE-8	3.2 xE-10

D. GAW
Inspector

12-13-04
Date

TAR# 1629

5.29 Measure the distance between the Suspension Rings at the bottom of the Threaded Rods. Install Threaded Rods (MC-390635 and MA-393227) after measurements

4493 mm — NORTH EAST 4492 mm — **Non-IP North to ~~IP North~~** CENTER — SNO ~~4494 mm~~

IPN to CENTER

4494 WEST SOUTH — 4489 EAST SOUTH — **Non-IP South to IP ~~South~~** ~~4489 mm~~

IPS to CENTER

Technician(s) — Date 12/15/04

5.30 Install bottom of shield (ME-390162, Qty 2) (ME-390163, Qty 2) (ME-390164).

Technician(s) — Date 12/15/04

5.31 Install Center Retainers (MA-390086) before installing Support Bands (ME-390083). Install Aluminum Spacers (MA-390373) and screws to the End Sections before attaching the Support Bands.

Technician(s) — Date 12-15-04

TAR#1709 Move to Page 77

5.32 Clean the following parts fromQ2 Heat Exchanger Corrugated Tube Assembly (ME-390143).

Part Name	Part Number	Quantity	Completed
Corrugated Tube Weldment	**(ME-390394)**	**1**	✓
Corrugated Tube Support	**(MB-390028)**	**8**	✓
Corrugated Tube Restrictor	**(ME-390029)**	**2**	✓

Technician(s) — Date 12-27-04

6.0 Shield Assembly

6.1 Lift the Cold Mass Assembly and place the Center Section (ME-390164) and End Sections (ME-390162) on the Insertion Rails. Lower the Cold mass back onto the rails ensuring the holes in the Shield Sections line up with Support Rollers.

Technician(s) _____ Date 12/16/04

6.2 Install the Cold Mass MLI Blankets per (ME-390302) and in the same position as Step 5.6.

Technician(s) _____ Date 12/17/04

DR HGQ 0508 (DR AGAINST ONE SUPPORT BAND)

6.3 Insert the Mid Sections (ME-390163) and the Support Bands (MD-390083).

Technician(s) _____ Date 12-16-04

6.4 Assemble the bottom half of the shield. Leave all bolts loose. Spray all screw threads with Molybdenum.

Lower Shield Section
(ME-390082)

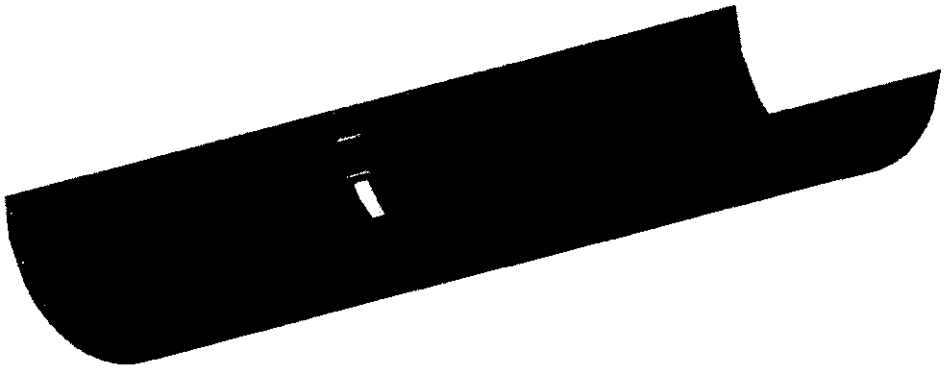

Technician(s) _____ Date 12/16/04

6.5 Assemble the Cooling Tubes (MD-390165) to the Bottom Half of the Shield.

Technician(s) _____ Date 12/16/04

6.6 Lift the Cold mass and place the Shield Inner and Outer MLI Blankets (ME-390313 & ME-390314) onto the insertion Rails in the correct orientation.

Note(s):

Place the Outer Blanket (ME-390314) on the Rails first.

Technician(s) _____ Date 12-17-04

6.7 Lower the Cold mass onto the rails. Ensure the slits in the blankets line up with Support Rollers.

Technician(s) _____ Date 12/17/04

6.8 Cut and install the pipe MLI blankets per Q2 Piping Insulation (ME-390306).

Technician(s) _____ Date 12/17/04

6.9 Tap the PEM nuts prior to installing shield. Use care in tightening screws so they don't break. Install the Upper Shield per Q2 Thermal Shield Assembly (ME-390161). Spray all screw threads with Molybdenum.

Technician(s) _____ Date 12-20-04

6.10 Install the Shield Blankets (ME-390313 & ME-390314). Cutouts will have to be made for the Upper Support Lugs.

Technician(s) _____ Date 12/21/04

7.0 Cold Mass Insertion into the Vacuum Vessel

7.1 Install Green Putty between the Vacuum Vessel and the Insertion Rails.

Technician(s) _____ Date 12/21/04

7.2 Install the Cold Mass Pull-in Tooling.

Technician(s) _____ Date 12/21/04

7.3 Mount the Pneumatic Winch to floor on the West side of the Vacuum Vessel.

Technician(s) _____ Date 12/21/04

7.4 Connect the cable to the Pull-in Tooling.

Technician(s) _____ Date 12/22/04

7.5 Pull the Cold mass Assembly into the Vacuum Vessel.

Technician(s) _____ Date 12/22/04

7.6 When the Cold Mass is fully inserted, install the Suspension System Adjusting Screws (MB-390039).

Note(s):

Ensure proper lubrication on adjusting screws. Check threads on screw and vacuum vessel prior to assembly and fix if necessary.

Technician(s) _____ Date 12-27-04

7.7 Assemble Corrugated Tube Supports (MB-390028) and Restrictors (MB-390029) to the Heat Exchanger Corrugated Tube per (ME-390143).

Technician(s) _____ Date 12/27/04

7.8 Slide the Corrugated Tube Assembly (ME-390143) into the Heat Exchanger Outer Shell per (ME-390142).

Technician(s) _____ Date 12-27-04

7.9 Adjust the Suspension System Adjusting Screw (MB-390039) as needed to center the Cold Mass in the Vacuum Vessel.

Technician(s) _____ Date 12-28-04

7.10 At the **Q2a** end, measure 1m 411.8 mm [55.58 in.] and cut the lead as per Q2 Module Assembly Q2a Lead End (ME-369895, sheet 3 of 4). Have a Weldor fuse the ends of the Superconducting Cable before shipping Magnet.

Technician(s) _____ Date 12-28-04

Weldor(s) _____ Date 12-28-04

7.11 At the **Q2b** end, measure 511.8 mm [20.15 in.] and cut the lead as per Q2 Module Assembly Q2b Lead End Details (ME-369895, sheet 2 of 4). Have a Weldor fuse the ends of the Superconducting Cable before shipping Magnet.

Technician(s) _____ Date 12/28/04

Weldor(s) _____ Date 12-28-04

8.0 Electrical Inspection

8.1 Perform an electrical inspection on each of the Individual Quadrants and the Cold Masses. Refer to the Valhalla and Leader Free Standing Coil Measurement Procedure (ES-292306).

To measure the resistance of a bussed Q2:

1. Use Valhalla Scientific 4300B digital micro-ohmmeter.
2. Set Test Current to 1 amp.
3. Set Scale to 2V full scale.
4. Turn temperature compensation on.
5. Turn test current off.
6. Put jumper between Q2a Q3 inner power lead and 5 KA bus as shown in figure.
7. Connect I_{HI} to the 5KA bus (Q2a Q3 inner power lead) as shown in figure.
8. Connect I_{LO} to the Q2b Q3 inner power lead as shown in figure.
9. Turn test current on.
10. Connect V_{HI} and V_{LO} buttons to voltage taps as shown below.
11. Read resistance and record in traveler.

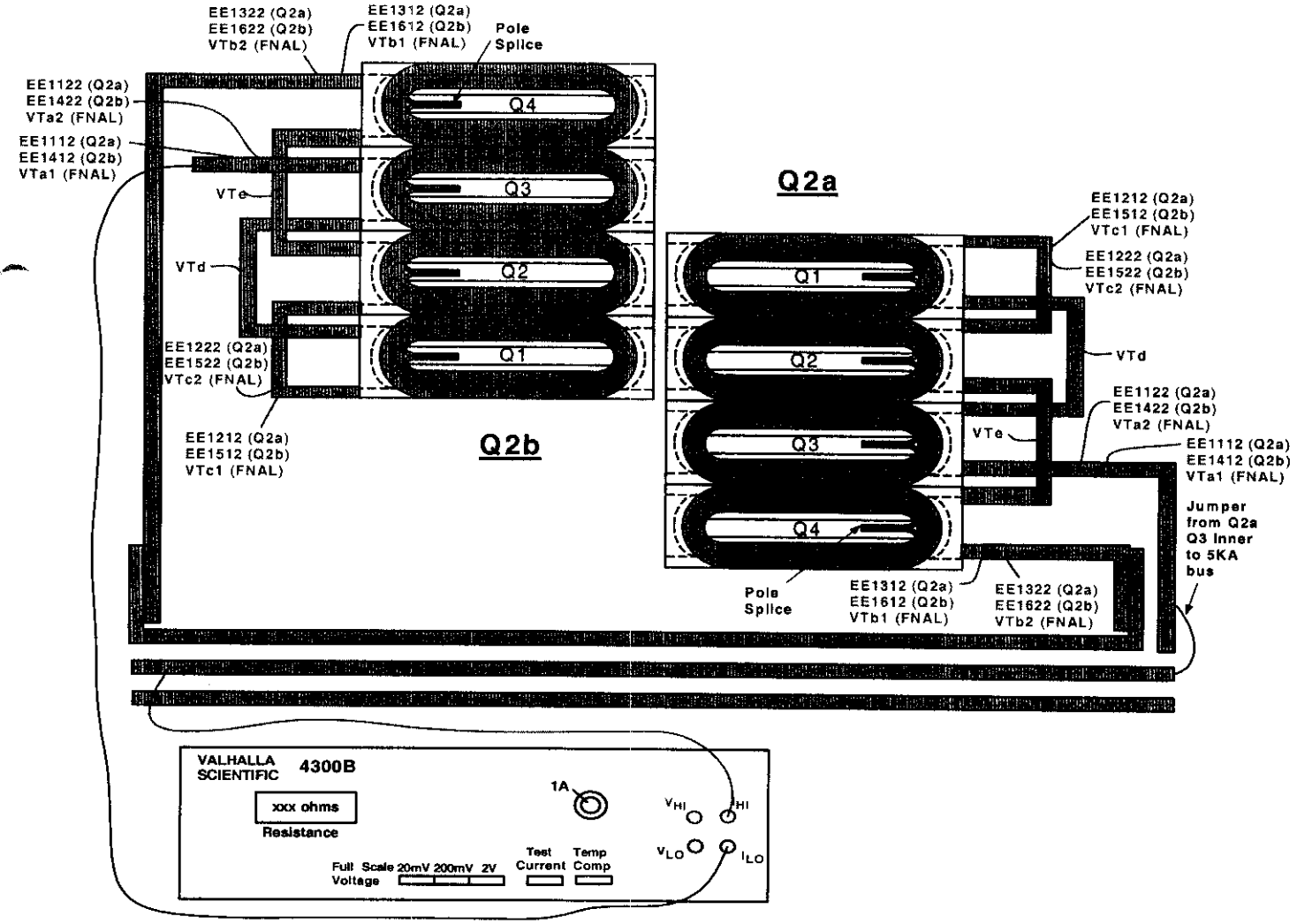

(Q2a) Resistance				Nominal ~ 560 to 585 mΩ
Voltage Tap Serial Numbers				Quadrant Total Resistance
Connect	Fermi	CERN	Quadrant	
V_{HI}	VTdQ2a	EMPTY	Quadrant 1	571.2 mΩ
V_{LO}	VTc1Q2a	EE1212		
V_{HI}	VTc1Q2a	EE1212	Quadrant 2	571.3 mΩ
V_{LO}	VTeQ2a	EMPTY		
V_{HI}	VTa1Q2a	EE1112	Quadrant 3	571.5 mΩ
V_{LO}	VTdQ2a	EMPTY		
V_{HI}	VTeQ2a	EMPTY	Quadrant 4	571.5 mΩ
V_{LO}	VTb1Q2a	EE1312		

V_{HI}	VTa1Q2a	EE1112	Total Cold Mass	Nominal ~ 2.305 Ω
V_{LO}	VTb1Q2a	EE1312		2.286 Ω

Technician(s) _____ Date 12/28/04

Check resistance of Redundant Voltage Taps.

Q2a Redundant Voltage Taps			
Connect	Fermi	CERN	Resistance
V_{HI}	VTa2Q2a	EE1122	1142.2 Ω
V_{LO}	VTc2Q2a	EE1222	
V_{HI}	VTc2Q2a	EE1222	1142.5 Ω
V_{LO}	VTb2Q2a	EE1322	

Technician(s) _____ Date 12/28/04

To measure Ls and Q of a Bussed Q2:

1. Use Hewlett Packard HP4284A digital LCR meter.
2. Turn line switch to on. The words "Measurement Display" should now be highlighted in the upper left corner of the display screen.
3. Use cursor buttons (shown in figure with arrows) to toggle down until "function" is highlighted near the upper left corner of the display screen.
4. Push the lowest of the five buttons to the right of display 3 times. (this button is shaded gray in the figure) The line in the display screen next to the second button down should now read "Ls-Q" and "function" near the upper left corner of the display should have the option "Ls-Q" chosen.
5. Scroll to "integer" using the cursor buttons. "Integer" will have the option "medium" chosen.
6. Press the 3rd button of five. The word "medium" should change to "long".
7. Connect H_{cur} to the 5KA bus (Q2a/Q3 inner power lead as shown in figure).
8. Connect L_{cur} to Q2b/Q3 inner power lead as shown in figure.
9. Connect H_{pot} and L_{pot} buttons to voltage taps as shown below.
10. Read Ls and Q from display and record in traveler.

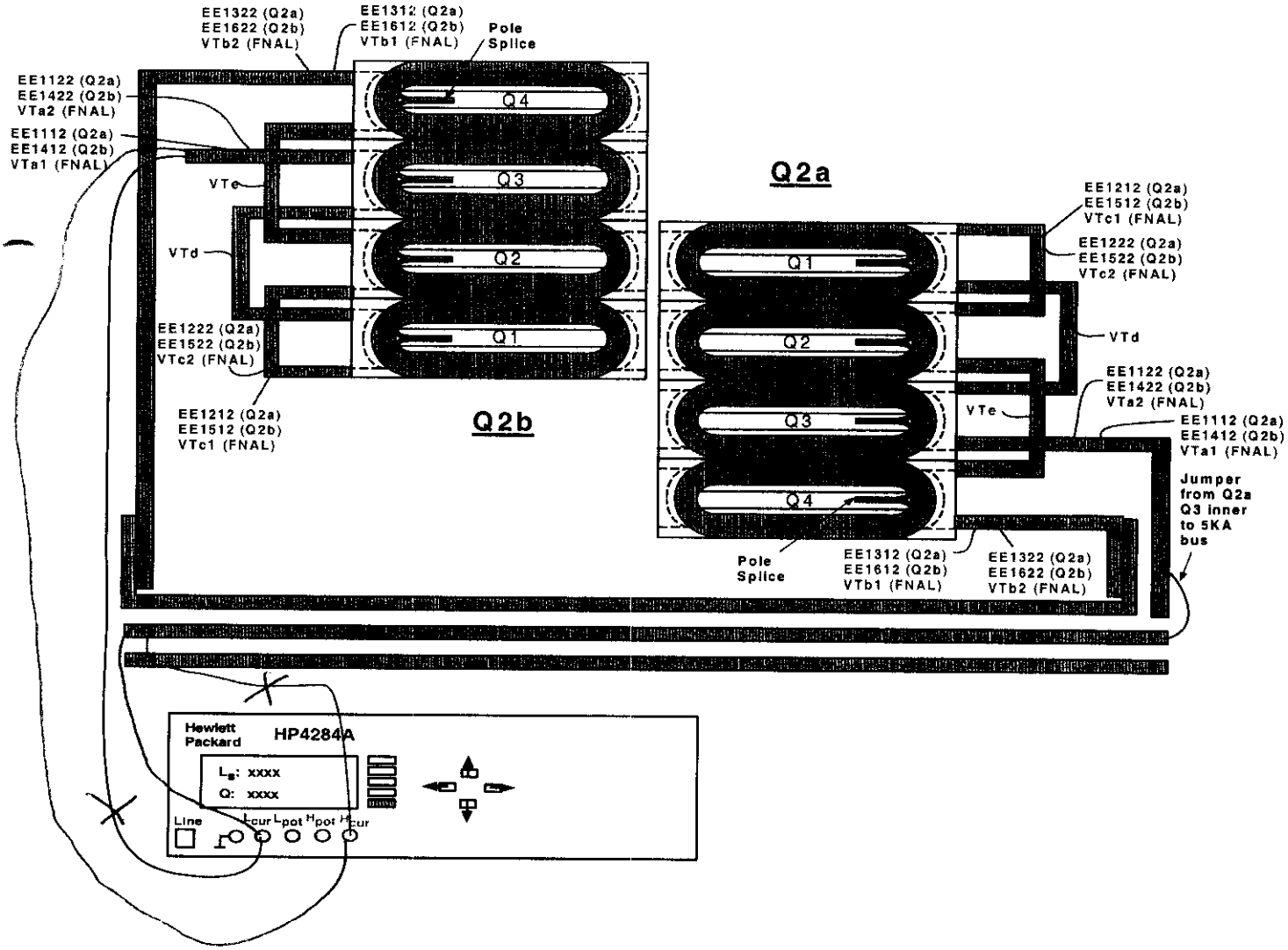

TRR# 1709

(Q2a) Inductance				Nominal ~ 2.880 to 2.935 mH
Voltage Tap Serial Numbers				Quadrant Total Inductance
Connect	Fermi	CERN	Quadrant	
H_{POT}	VTdQ2a	EMPTY	Quadrant 1	3.4276 ~~3.2125~~ mH
L_{POT}	VTc1Q2a	EE1212		
H_{POT}	VTc1Q2a	EE1212	Quadrant 2	3.4171 mH
L_{POT}	VTeQ2a	EMPTY		
H_{POT}	VTdQ2a	EMPTY	Quadrant 3	3.3621 mH
L_{POT}	VTa1Q2a	EE1112		
H_{POT}	VTeQ2a	EMPTY	Quadrant 4	3.4076 mH
L_{POT}	VTb1Q2a	EE1312		

H_{POT}	VTa1Q2a	EE1112	Total Cold Mass	Nominal ~ 13.3376 mH
L_{POT}	VTb1Q2a	EE1312		13.614 mH

(Q2a) Q-Factor				Nominal ~ 4.5 to 5.2
Voltage Tap Serial Numbers				Quadrant Total Q
Connect	Fermi	CERN	Quadrant	
H_{POT}	VTdQ2a	EMPTY	Quadrant 1	~~4.2~~ 3.9
L_{POT}	VTc1Q2a	EE1212		
H_{POT}	VTc1Q2a	EE1212	Quadrant 2	3.8
L_{POT}	VTeQ2a	EMPTY		
H_{POT}	VTa1Q2a	EE1112	Quadrant 3	3.8
L_{POT}	VTdQ2a	EMPTY		
H_{POT}	VTeQ2a	EMPTY	Quadrant 4	3.8
L_{POT}	VTb1Q2a	EE1312		

H_{POT}	VTa1Q2a	EE1112	Total Cold Mass	Nominal ~ 5.036
L_{POT}	VTb1Q2a	EE1312		3.8

Technician(s) _____ Date 12/29/04

To measure the resistance of a bussed Q2:

1. Use Valhalla Scientific 4300B digital micro-ohmmeter.
2. Set Test Current to 1 amp.
3. Set Scale to 2V full scale.
4. Turn temperature compensation on.
5. Turn test current off.
6. Put jumper between Q2a Q3 inner power lead and 5 KA bus as shown in figure.
7. Connect I_{HI} to the 5KA bus (Q2a Q3 inner power lead) as shown in figure.
8. Connect I_{LO} to the Q2b Q3 inner power lead as shown in figure.
9. Turn test current on.
10. Connect V_{HI} and V_{LO} buttons to voltage taps as shown below.
11. Read resistance and record in traveler.

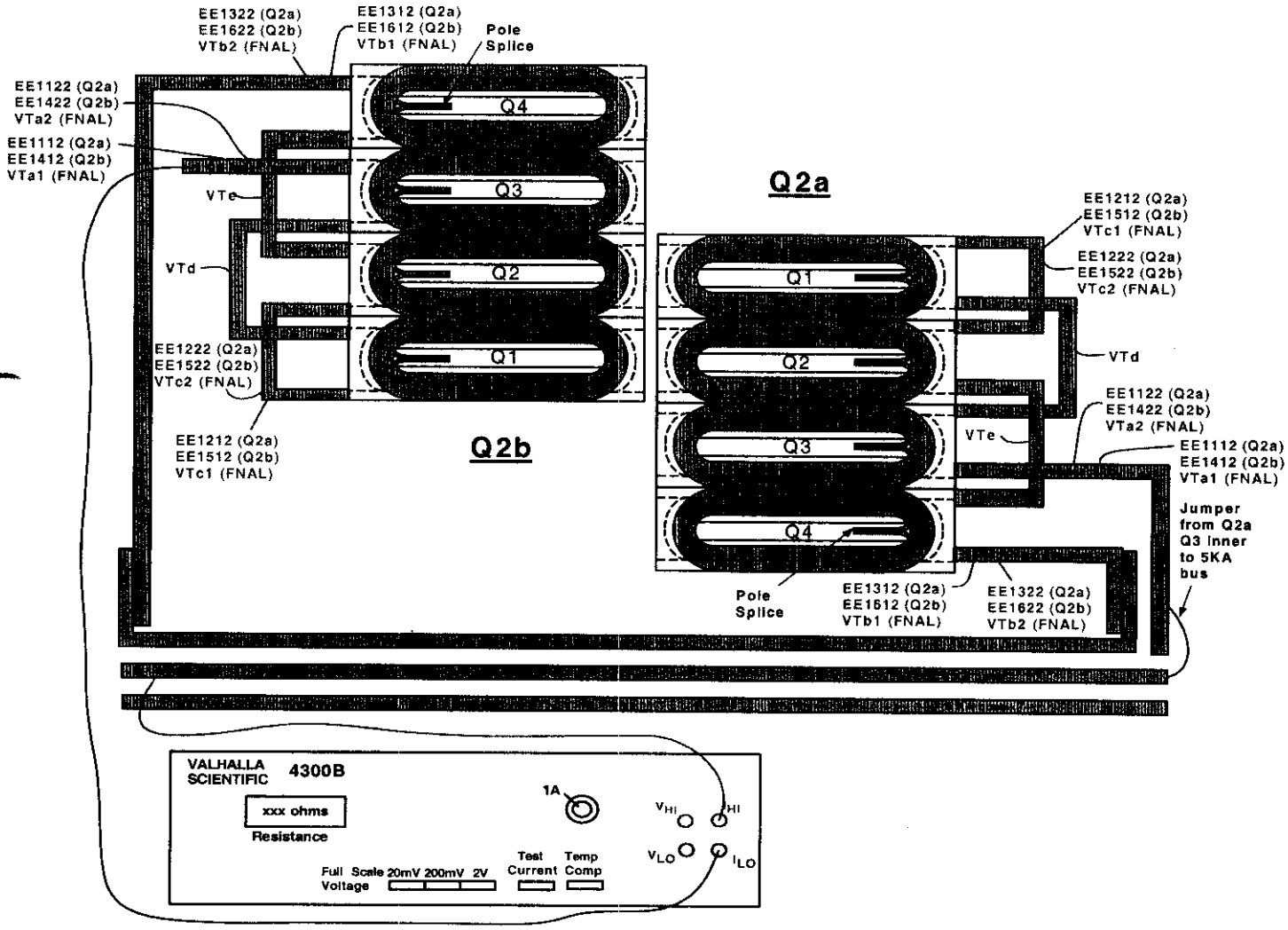

(Q2b) Resistance				Nominal ~ 560 to 585 mΩ
Voltage Tap Serial Numbers				Quadrant Total Resistance
Connect	Fermi	CERN	Quadrant	
V_{HI}	VTc1Q2b	EE1512	Quadrant 1	570.9 mΩ
V_{LO}	VTdQ2b	EMPTY		
V_{HI}	VTeQ2b	EMPTY	Quadrant 2	570.0 mΩ
V_{LO}	VTc1Q2b	EE1512		
V_{HI}	VTdQ2b	EMPTY	Quadrant 3	570.3 mΩ
V_{LO}	VTa1Q2b	EE1412		
V_{HI}	VTb1Q2b	EE1612	Quadrant 4	570.2 mΩ
V_{LO}	VTeQ2b	EMPTY		

V_{HI}	VTb1Q2b	EE1612	Total Cold Mass	Nominal ~ 2.305 Ω
V_{LO}	VTa1Q2b	EE1412		2.281 Ω

Technician(s) _____ Date 12/28/04

Check the resistance of the Redundant Voltage Taps.

Q2b Redundant Voltage Taps			
Connect	Fermi	CERN	Resistance
V_{HI}	VTc2Q2b	EE1522	1140.7 Ω
V_{LO}	VTa2Q2b	EE1422	
V_{HI}	VTb2Q2b	EE1622	~~1140.7~~ 1139.6 Ω
V_{LO}	VTc2Q2b	EE1522	

Technician(s) _____ Date 12/28/04

To measure Ls and Q of a Bussed Q2:

1. Use Hewlett Packard HP4284A digital LCR meter.
2. Turn line switch to on. The words "Measurement Display" should now be highlighted in the upper left corner of the display screen.
3. Use cursor buttons (shown in figure with arrows) to toggle down until "function" is highlighted near the upper left corner of the display screen.
4. Push the lowest of the five buttons to the right of display 3 times. (this button is shaded gray in the figure) The line in the display screen next to the second button down should now read "Ls-Q" and "function" near the upper left corner of the display should have the option "Ls-Q" chosen.
5. Scroll to "integer" using the cursor buttons. "Integer" will have the option "medium" chosen.
6. Press the 3rd button of five. The word "medium" should change to "long".
7. Connect H_{cur} to the 5KA bus (Q2a/Q3 inner power lead as shown in figure).
8. Connect L_{cur} to Q2b/Q3 inner power lead as shown in figure.
9. Connect H_{pot} and L_{pot} buttons to voltage taps as shown below.
10. Read Ls and Q from display and record in traveler.

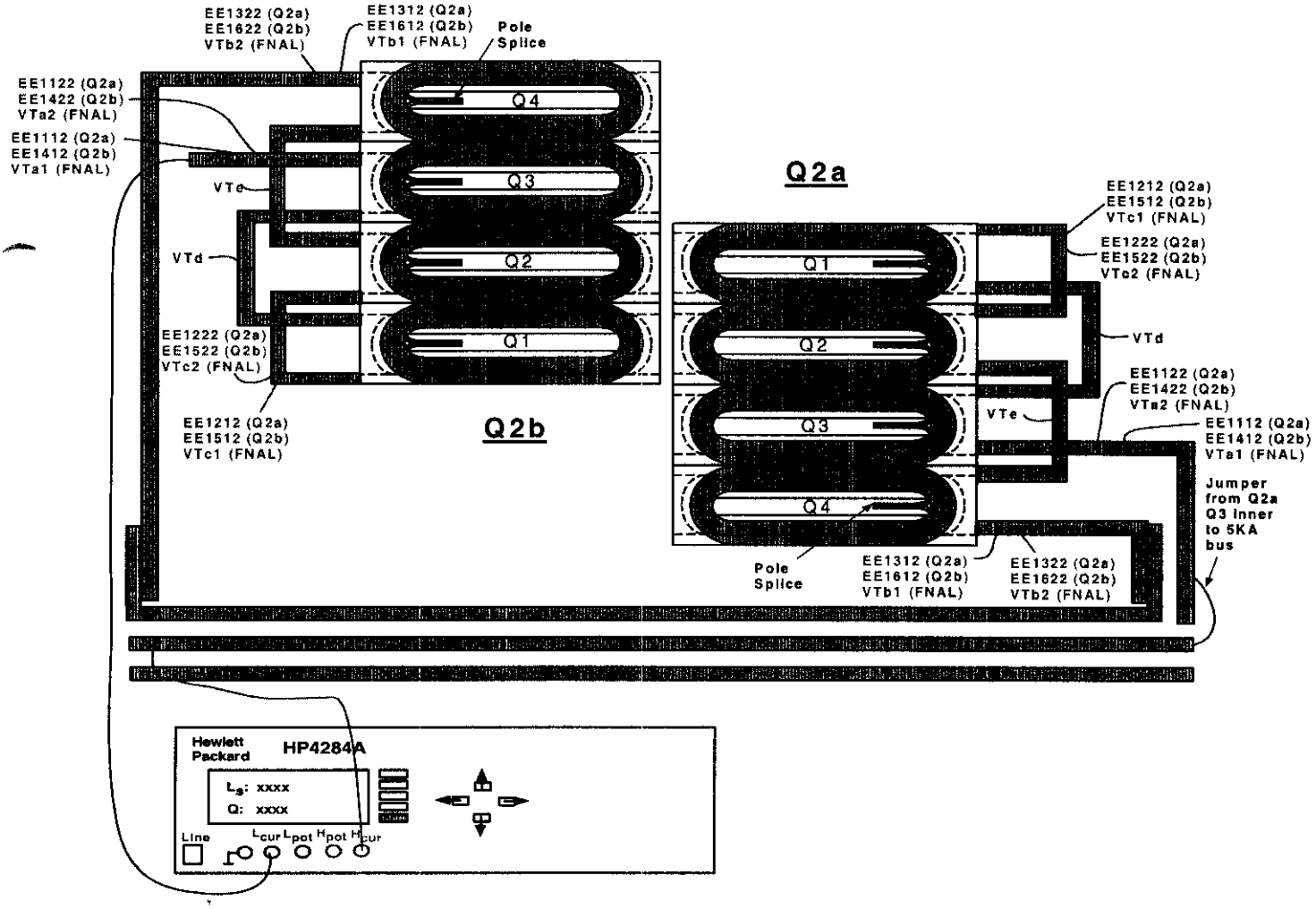

(Q2b) Inductance				Nominal ~ 2.880 to 2.935 mH
Voltage Tap Serial Numbers				Quadrant Total Inductance
Connect	Fermi	CERN	Quadrant	
H_{POT}	VTc1Q2b	EE1512	Quadrant 1	3.4154 mH
L_{POT}	VTdQ2b	EMPTY		
H_{POT}	VTeQ2b	EMPTY	Quadrant 2	3.4153 mH
L_{POT}	VTc1Q2b	EE1512		
H_{POT}	VTdQ2b	EMPTY	Quadrant 3	3.3879 mH
L_{POT}	VTa1Q2b	EE1412		
H_{POT}	VTb1Q2b	EE1612	Quadrant 4	3.4134 mH
L_{POT}	VTeQ2b	EMPTY		

H_{POT}	VTb1Q2b	EE1612	Total Cold Mass	Nominal ~ 13.3376 mH
L_{POT}	VTa1Q2b	EE1412		13.629 mH

(Q2b) Q-Factor				Nominal ~ 4.5 to 5.2
Voltage Tap Serial Numbers				Quadrant Total Q
Connect	Fermi	CERN	Quadrant	
H_{POT}	VTc1Q2b	EE1512	Quadrant 1	3.8
L_{POT}	VTdQ2b	EMPTY		
H_{POT}	VTeQ2b	EMPTY	Quadrant 2	3.8
L_{POT}	VTc1Q2b	EE1512		
H_{POT}	VTdQ2b	EMPTY	Quadrant 3	3.8
L_{POT}	VTa1Q2b	EE1412		
H_{POT}	VTb1Q2b	EE1612	Quadrant 4	3.8
L_{POT}	VTeQ2b	EMPTY		

H_{POT}	VTb1Q2b	EE1612	Total Cold Mass	Nominal ~ 5.036
L_{POT}	VTa1Q2b	EE1412		3.8

Technician(s)

12/24/07
Date

To measure the resistance of a Thermometer (RTD):

1. Use Hewlett Packard HP3457A digital multimeter.
2. Record temperature of building within +/- 5 degrees.
3. Press line button to turn line on.
4. Connect wires as shown in Figure below.
   U+ (Black) to Sense HI
   I+ (Yellow) to Input HI
   U- (Red) to Sense LO
   I- (Green) to Input LO
5. Push blue button (function key) once.
6. Push OHMF button.
7. Verify arrow in readout is above the 4WΩ (meaning a 4 wire resistance measurement).
8. Read resistance in ohms and record in traveler.

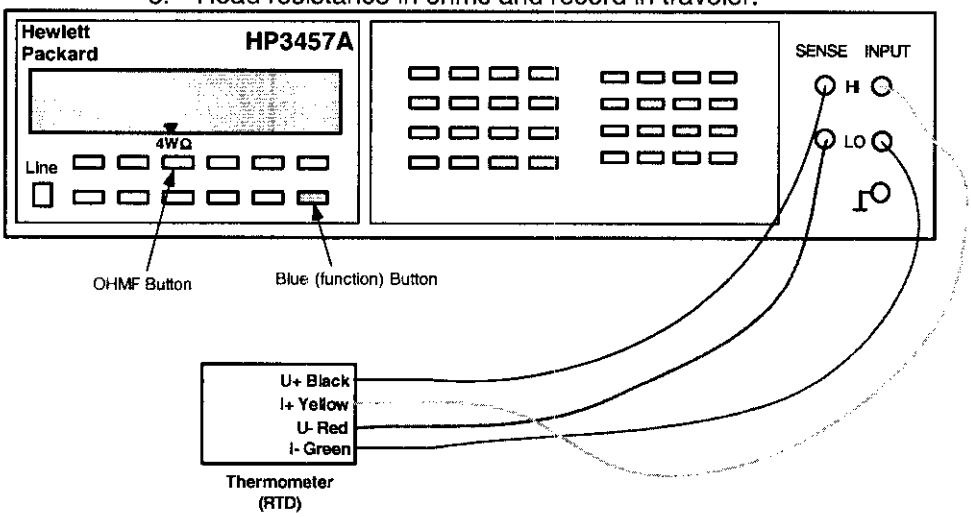

To measure the resistance of a Cryogenic (Warm-up) Heater

1. Use Hewlett Packard HP3457A digital multimeter.
2. Record temperature of building within +/- 5 degrees.
3. Press line button to turn line on.
4. Connect wires as shown in Figure below.
5. Push blue button (function key) once.
6. Push OHMF button.
7. Verify arrow in readout is above the 4WΩ (meaning a 4 wire resistance measurement).
   Note: Although this is technically a 4 wire measurement, it is effectively a 2 wire measurement, since there are only 2 wires connected to each heater.
8. Read resistance in ohms and record in traveler.

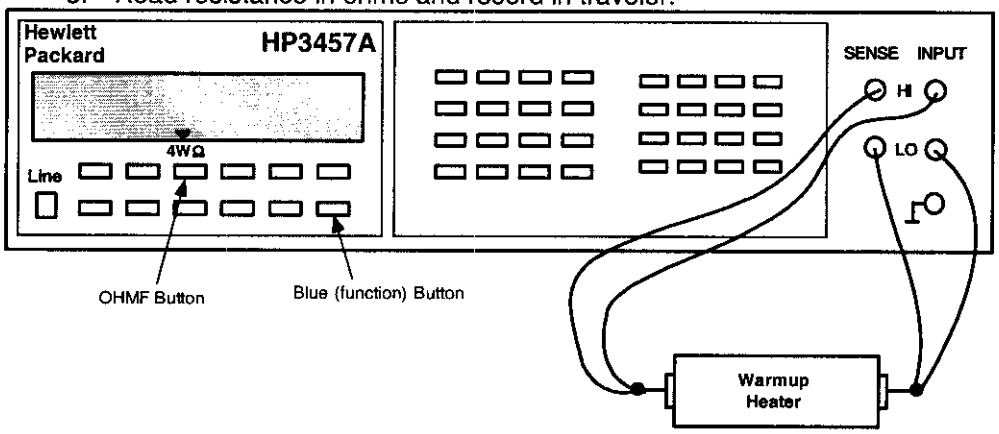

Q2a - RTD's and Cryogenic (warm-up) Heaters			
Temperature of Building (+/- 5°): 70° F			
Component	**Fermi**	**CERN**	**Resistance**
Q2a RTD, primary	TaQ2a	TT8312	67.143 Ω
Q2a RTD, redundant	TbQ2a	TT8322	68.063 Ω
Q2A Cryogenic (warm-up) Heater (LE) - wire toward cold mass end plate (CERN #1 I+)	W1aQ2A	EH8312+	18.098 Ω
Q2A Cryogenic (warm-up) Heater (LE) - wire toward cold mass mag center (CERN #1 I-)	W2aQ2A	EH8312-	
Q2A Cryogenic (warm-up) Heater (Non-LE) - wire toward cold mass end plate (CERN #2 I+)	W1bQ2A	EH8322+	17.809 Ω
Q2A Cryogenic (warm-up) Heater (Non-LE) - wire toward cold mass mag center (CERN #2 I-)	W2bQ2A	EH8322-	

Technician(s) _____ Date 12/28/04

Q2b - RTD's and Cryogenic (warm-up) Heaters			
Temperature of Building (+/- 5°): 70° F			
Component	**Fermi**	**CERN**	**Resistance**
Q2b RTD, primary	TaQ2b	TT8332	66.199 Ω
Q2b RTD, redundant	TbQ2b	TT8342	68.696 Ω
Q2B Cryogenic (warm-up) Heater (LE) - wire toward cold mass end plate (CERN #1 I+)	W1aQ2B	EH8332+	17.406 Ω
Q2B Cryogenic (warm-up) Heater (LE) - wire toward cold mass mag center (CERN #1 I-)	W2aQ2B	EH8332-	
Q2B Cryogenic (warm-up) Heater (Non-LE) - wire toward cold mass end plate (CERN #2 I+)	W1bQ2B	EH8342+	17.747 Ω
Q2B Cryogenic (warm-up) Heater (Non-LE) - wire toward cold mass mag center (CERN #2 I-)	W2bQ2B	EH8342-	

Technician(s) _____ Date 12/28/04

Using the Hewlett Packard HP3457A digital multimeter, measure the Strip Heater Resistance for Q2a and Q2b.

Q2a Strip Heater Resistance				
Fermi	CERN	Description	Limit	Resistance
H1aQ2a	YT1112+	Circuit A	18.20 to 21 Ω	20.136 Ω
H2aQ2a	YT1112-			
H1bQ2a	YT1122+	Circuit B	18.20 to 21 Ω	20.178 Ω
H2bQ2a	YT1122-			

Technician(s) _____ Date 12/28/04

Q2b Strip Heater Resistance				
Fermi	CERN	Description	Limit	Resistance
H1aQ2b	YT1132+	Circuit A	18.20 to 21 Ω	18.203 Ω
H2aQ2b	YT1132-			
H1bQ2b	YT1142+	Circuit B	18.20 to 21 Ω	18.232 Ω
H2bQ2b	YT1142-			

Technician(s) _____ Date 12/28/04

8.2 Using the HP3457A, connect power thru the connector Power Leads (HA2 and HB2 to measure Q2-H2 or VA2 and VB2 to measure Q2-V2). Connect the Sense Leads as shown in table below and record resistance.

(Magnet Bus Leads)

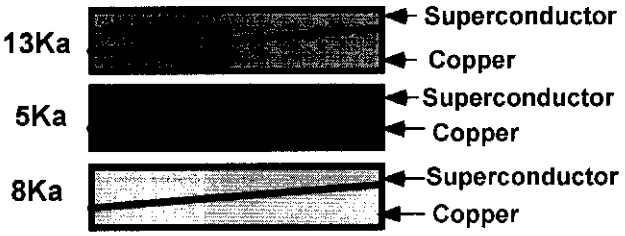

(Corrector Bus Leads)

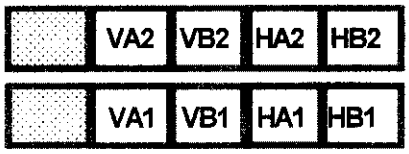

(View Looking into Q2b)

MCBX Corrector Coil Taps			
Component	**FermiLab Label**	**CERN Label**	**Resistance**
Q2-H2	**VTH2**	**EE8122**	48.92 Ω
	HA2	**N/A**	
Q2-V2	**VTV2**	**EE8112**	43.91 Ω
	VA2	**N/A**	

Technician(s)

12/28/01
Date

8.3 Check Q1 Instrumentation Bus Wires for Continuity.

Module	Pin	Fermi	CERN	KEK	Description	Done
M2	1	VTa1Q1	EE1111	a1	Q1 Lead Voltage Tap "a", primary	✓
M2	2	VTa2Q1	EE1121	a2	Q1 Lead Voltage Tap "a", redundant	✓
M2	3	VTc1Q1	EE1211	c1	Q1 Center Voltage Tap "c", primary	✓
M2	4	VTc2Q1	EE1221	c2	Q1 Center Voltage Tap "c", redundant	✓
M2	5	VTb1Q1	EE1311	b1	Q1 Lead Voltage Tap "b", primary	✓
M3	5	VTb2Q1	EE1321	b2	Q1 Lead Voltage Tap "b", redundant	✓
M5	1	VTH1	EE8121		Corrector voltage tap Q1-H1 (skew dipole) (on MCBX, MCBXH, A+ lead)	✓
M5	2	VTV1	EE8111		Corrector voltage tap Q1-V1 (normal dipole) (on MCBX, MCBXV A+ lead)	✓
M7	1	W1aQ1	EH8311+		Q1 Cryogenic Heater lead end - wire at top (CERN #1 I+)	✓
M7	2	W2aQ1	EH8311-		Q1 Cryogenic Heater lead end - wire at bottom (CERN #1 I-)	✓
M7	3	W1bQ1	EH8321+		Q1 Cryogenic Heater non-lead end - wire at top (CERN #2 I+)	✓
M7	4	W2bQ1	EH8321-		Q1 Cryogenic Heater non-lead end - wire at bottom (CERN #2 I-)	✓
M9	1	H1aQ1	YT1111+	HA1	Q1 Protection (Strip) Heater, ("a" circuit) (CERN lead #1+)	✓
M9	3	H2aQ1	YT1111-	HA2	Q1Protection (Strip) Heater, ("a" circuit) (CERN lead #1-)	✓
M9	5	H1bQ1	YT1121+	HB1	Q1 Protection (Strip) Heater, ("b" circuit) (CERN lead #2+)	✓
M10	4	H2bQ1	YT1121-	HB2	Q1 Protection (Strip) Heater, ("b" circuit) (CERN lead #2-)	✓
M12	1	TaQ1_I+	TT8311 I+		Q1 RTD, primary Wire color: Yellow	✓
M12	2	TaQ1_I-	TT8311 I-		Q1 RTD, primary Wire color: Green	✓
M12	3	TaQ1_V+	TT8311 U+		Q1 RTD, primary Wire color: Black	✓
M12	4	TaQ1_V-	TT8311 U-		Q1 RTD, primary Wire color: Red	✓
M12	5	TbQ1_I+	TT8321 I+		Q1 RTD, primary Wire color: Yellow	✓
M12	6	TbQ1_I-	TT8321 I-		Q1 RTD, primary Wire color: Green	✓
M12	11	TbQ1_V+	TT8321 U+		Q1 RTD, primary Wire color: Black	✓
M12	10	TbQ1_V-	TT8321 U-		Q1 RTD, primary Wire color: Red	✓

Technician(s) _____ Date 12/28/04

9.0 Production Complete

9.1 Process Engineering verify that the LHC Cryostat Assembly Traveler (5520-TR-333644) is accurate and complete. This shall include a review of all steps to ensure that all operations have been completed and signed off. Ensure that all Discrepancy Reports, Nonconformance Reports, Repair/Rework Forms, Deviation Index and dispositions have been reviewed by the Responsible Authority for conformance before being approved.

Comments:

Process Engineering/Designee

FEB 1 4 2005
Date

TD - Engineering Fabr)tion Component Kit List

ORIGINAL

Process Engineering

Component Serial No. LQXB08

Kit submitted by: JOHN SZOSTAK Ext. 2003

Fermi ID No. 02943C

Date submitted: 23-Sep-04

Need date: 12-Oct-04

Deliver to: ICB

Use with Traveler No. 333644

Job No. 248

M&S task number: 300 1.1.1.3.4

Drawing Title: **Q2 CRYOSTAT ASSEMBLY (GENERAL)**

Drawing No. **ME-390206** **Rev. D**

Material Control

Parts available

Verified by: Marsha Schmidt

Fermi ID No. 04223N

Date submitted to stockroom: 10/6/2004

Parts issued

Issued by:

Fermi ID No. 2698

Date issued: 10/15/04

Parts received by E&F: John G. Szostak

Fermi ID No. 02943C

Date received by E&F: 10/15/04

	Description	Dwg Size	Number	Rev	Unit	Quantity Required	Location	Quantity Issued	E&F Verified	Routing Form Number	Spares Number / Comment
1	ADJUSTING SCREW	MB	390039	C	EA	12	IB4 Bin	12		81596	111 pcs.
2	VACUUM VESSEL ASSEMBLY	ME	390129	E	EA	1	CDF				3 pcs.
3	TARGET HOLDER	MD	390211	B	EA	6	R10,1,1	6		74757	50 pcs.
4	BLANK, NON ROTATABLE CONFLAT FLANGE, 4.62" OD	MA	390374	*	EA	12	R8,3,4	12		78987	128 pcs.
5	COPPER GASKET	MA	390375	*	EA	12	IB4 Bin	12		78429	139 pcs.
6	BOLT SET, HEX HEAD 5/16 - 24 x 1.25 LG.	MA	390376	*	EA	120	IB4 Bin	120		72306	1284 pcs.
7	WASHER, 0.656" ID x 1.38" OD x 0.13 THK., S.S.	MA	390377	*	EA	12	IB4 Bin	12		77866	130 pcs.
8	TAYLOR HOBSON SOCKET CUP	MA	390426	*	EA	12	R1,3,5	12		77884	136 pcs.
9	75MM DIA. FLANGE COVER	MA	390491	*	EA	6	IB4 Bin	6		78835	213 pcs.
10	114MM DIA. FLANGE COVER	MA	390492	*	EA	4	IB4 Bin	4		78836	211 pcs.

TD - Engineering Fabr tion Component Kit List ORIGINAL

	Description	Dwg Size	Number	Rev	Unit	Quantity Required	Location	Quantity Issued	E&F Verified	Routing Form Number	Spares Number / Comment
11	134MM DIA. FLANGE COVER	MA	390493	*	EA	8	IB4 Bin	8		78837	291 pcs.
12	201MM DIA. FLANGE COVER	MA	390494	*	EA	2	IB4 Bin	2		78834	88 pcs.
13	ALIGNMENT FIDUCIAL COVER	MA	390495	*	EA	12	IB4 Bin	12		78957	214 pcs.
14	TARGET HOLDER, RIGHT	MD	390539	*	EA	3	R8,S1,L3	3		79556	33 pcs.
15	TARGET HOLDER, LEFT	MD	390540	*	EA	3	R8,S1,L5	3		79555	33 pcs.
16	M16-2 x 70mm HEX SHSC, S.S.	MA	393021	*	EA	12	IB4 Bin	12		N/A	165 pcs.
17	M6 FLAT WASHER 18-8 S.S.	MA	393024	*	EA	48	IB4 Bin	48		78891	524 pcs.
18	SPRING PIN, 8 x 26	MA	393031	*	EA	12	IB4 Bin	12		77819	126 pcs.
19	M10-1.5 x 25mm HEX SHSC, S.S.	MA	393036	*	EA	36	IB4 Bin	36		77899	426 pcs.
20	M6-1.0 x 35mm HEX SHCS 18-8 S.S.	MA	393045	*	EA	24	IB4 Bin	24		78886	272 pcs.
21	M8 x 30mm SPRING PIN 18-8 S.S.	MA	393048	*	EA	12	IB4 Bin	12		78887	150 pcs.
22	M10 LOCK WASHER 18-8 S.S.	MA	393220	*	EA	36	IB4 Bin	36		80024	548 pcs.
23	M4 SPRING PIN SLOTTED, PLAIN STEEL	MA	393360	*	EA	24	R2,2,3	24		81763	264 pcs.
Q2 INSULATED SHIELD & PIPING ASSEMBLY		ME	390207	*	EA	1					
24	Q2 SHIELD MLI INNER BLANKET	ME	390313	*	EA	1	P/N	1		N/A	2 pcs.
25	Q2 SHIELD MLI OUTER BLANKET	ME	390314	*	EA	1	P/N	1		N/A	2 pcs.
Q2 THERMAL SHIELD ASSEMBLY		ME	390161	C	EA	1					
26	SUPPORT BAND	ME	390083	A	EA	8	P/N	8		77146	68 pcs.

ORIGINAL

TD - Engineering Fabr tion Component Kit List

	Description	Dwg Size	Number	Rev	Unit	Quantity Required	Location	Quantity Issued	E&F Verified	Routing Form Number	Spares Number / Comment
27	RETAINER	MA	390086	*	EA	16	IB4 Bin	16		78914	274 pcs.
28	END SECTION	ME	390162	*	EA	4	P/N	4		N/A	4 pcs.
29	MID SECTION	ME	390163	*	EA	4	P/N	4		N/A	4 pcs.
30	CENTER SECTION	ME	390164	*	EA	2	NT03295	2		77228	2 pcs.
31	COOLING TUBE WELDMENT	MD	390165	*	EA	2	P/N	2		N/A	2 pcs.
32	ALUMINUM SPACER	MA	390373	*	EA	64	IB4 Bin	64		81135	651 pcs.
33	RETAINING WASHER	MA	390378	*	EA	394	IB4 Bin	394		76875	4108 pcs.
34	THERMAL SHIELD BRACKET	MD	390783	A	EA	4	R7,1,4	4		81981	76 pcs.
35	M5 x 16mm BUTTON HEAD CAP SCREW	MA	393028	*	EA	394	IB4 Bin	394		79003	4129 pcs.
	Q2 CRYOSTAT ASSEMBLY INTERNAL PIPING	ME	390208	E	EA	1					
36	HEAT EXCHANGER OUTER SHELL END FLANGE	MC	390031	B	EA	2	IB4 Bin	2		77209	53 pcs.
37	PUMPING LINE END FLANGE	MC	390032	B	EA	2	IB4 Bin	2		77210	59 pcs.
38	COOL DOWN LINE END FLANGE	MB	390033	B	EA	2	IB4 Bin	2		77208	42 pcs.
39	RETAINING CLIP	MA	390103	*	EA	16	IB4 Bin	16		76785	204 pcs.
40	HEAT EXCHANGER TO COLD MASS CONNECTOR	MC	390111	A	EA	1	R2,S1,L5	1		76268	2 pcs.
41	TIE BAR RETAINING CLAMP	MB	390136	*	EA	8	IB4 Bin	8		77132	65 pcs.
42	Q2 COOL DOWN LINE TUBE	MB	390146	A	EA	1	P/N	1		77651 N/A	2 pcs.
43	Q2 PUMPING LINE TUBE	MB	390147	A	EA	1	P/N	1		77652	2 pcs.

ORIGINAL

TD - Engineering Fabr tion Component Kit List

	Description	Dwg Size	Number	Rev	Unit	Quantity Required	Location	Quantity Issued	E&F Verified	Routing Form Number	Spares Number / Comment
44	PUMPING LINE PIPE STOP	MB	390149	*	EA	4	IB4 Bin	4		81242	42 pcs.
45	COOL DOWN LINE PIPE STOP	MB	390150	*	EA	4	IB4 Bin	4		77134	39 pcs.
46	Q2 4.5K INTERCEPT LINE TUBE	MB	390204	*	EA	3	P/N	3		N/A	13 pcs.
47	Q2 PIPE SUPPORT ASSEMBLY	MD	390258	A	EA	4	P/N	2		76618	2 pcs. / 2 pcs. ICB has
48	INTERCEPT LINE PIPE STOP	MA	390379	A	EA	6	IB4 Bin	6		81243	149 pcs.
49	PIPE SUPPORT BRACE	MB	390452	A	EA	4	R1,S3,L2	4		78913	8 pcs.
50	M6 x 45mm HEX SHCS, S.S.	MA	393017	*	EA	8	IB4 Bin	8		77846	24 pcs.
51	M6 HEX NUT, S.S.	MA	393022	A	EA	8	IB4 Bin	8		78236	26 pcs.
52	M6 FLAT WASHER, S.S.	MA	393024	*	EA	8	IB4 Bin	8		78841	524 pcs.
53	M6 LOCK WASHER, S.S.	MA	393026	*	EA	8	IB4 Bin	3 393026 5 390002	REV 4	3 77850 5 73270	24 pcs.
	Q2 HEAT EXCHANGER ASSEMBLY	ME	390142	*	EA	1					
54	Q2 OUTER SHELL TUBE	MD	390145	B	EA	1	P/N	1		77992	3 pcs.
	CORRUGATED TUBE ASSEMBLY	ME	390143	A	EA	1					
55	CORRUGATED TUBE SUPPORT	MB	390028	*	EA	8	R9,S1,L4	8		78144	55 pcs.
56	CORRUGATED TUBE RESTRICTOR	MB	390029	A	EA	2	R9,S1,L4	2		77724	51 pcs.
57	CORRUGATED TUBE WELDMENT	ME	390394	*	EA	1	P/N	1		78456	2 pcs.
	Q2 PIPING INSULATION	ME	390306	A	EA	1					
58	COLD MASS MLI CENTER BLANKET	ME	390305	*	EA	1	P/N	1		N/A	2 pcs.

TD - Engineering Fabr tion Component Kit List

ORIGINAL

	Description	Dwg Size	Number	Rev	Unit	Quantity Required	Location	Quantity Issued	E&F Verified	Routing Form Number	Spares Number / Comment
59	PIPING MLI END BLANKET	ME	390307	*	EA	2	P/N	2		N/A	4 pcs.
60	PIPING MLI MID BLANKET	ME	390308	*	EA	2	P/N	2		N/A	4 pcs.
	Q2 SUSPENSION SYSTEM INSTALLATION ASSEMBLY	ME	390310	*	EA	1					
61	TIE BAR SHIM, 6.4mm	MB	390118	*	EA	6	IB4 Bin	6		77204	19 pcs.
62	TIE BAR SHIM, 2.4mm	MB	390119	*	EA	6	IB4 Bin	6		77203	18 pcs.
63	TIE BAR SHIM, 0.6mm	MB	390120	*	EA	6	IB4 Bin	6			18 pcs.
64	Q2 TIE BAR ASSEMBLY	MC	390167	*	EA	4	P/N	4		78085	8 pcs.
65	OUTBOARD SUSPENSION MOUNTING BRACKET	MD	390280	*	EA	4	R9,S1,L2	4		77277	12 pcs.
66	MIDDLE SUSPENSION MTG BRACKET	MD	390281	*	EA	2	IB4 Bin	2		77106	6 pcs.
67	Q2 COLD MASS WELDED ASSEMBLY	ME	390309	B	EA	1	ICB Has				
☆ 68	M8 x 50mm SHCS, S.S.	MA	393020	*	EA	18	IB4 Bin	4			4 pcs./APR
69	M8 HEX NUT, S.S.	MA	393023	*	EA	18	IB4 Bin	18		78890	124 pcs.
70	M8 FLAT WASHER, S.S.	MA	393025	*	EA	18	IB4 Bin	18		78198	886 pcs.
71	M8 LOCK WASHER, S.S.	MA	393027	*	EA	18	IB4 Bin	18		76744	909 pcs.
	FIXED SUPPORT ASSEMBLY	ME	390041	D	EA	1					
72	RING ASSEMBLY	ME	390043	B	EA	1	NT2409	1		76906	10 pcs.
73	SUPPORT PIN	MB	390047	B	EA	2	R8,S2,L1	2		76714	68 pcs.
74	1.0 mm THK SHIM	MA	390275	A	EA	8	ICB Has				4 pcs.

ORIGINAL

TD - Engineering Fabr tion Component Kit List

	Description	Dwg Size	Number	Rev	Unit	Quantity Required	Location	Quantity Issued	E&F Verified	Routing Form Number	Spares Number / Comment
75	0.5 mm THK SHIM	MA	390276	*	EA	8	ICB Has				16 pcs.
76	M16 x 40.0 mm LG SHOULDER SCREW, 18-8 S.S.	MA	390277	*	EA	8	IB4 Bin	8		76913	264 pcs.
77	TWO-PIECE CLAMP-ON COLLAR	MA	390321	A	EA	4	IB4 Bin	4		76912	60 pcs.
78	0.13 mm THK SHIM	MA	390480	*	EA	8	R2,S2,L4	8		79121	257 pcs.
79	0.25 mm THK SHIM	MA	390481	*	EA	12	R2,S2,L4	12		79122	393 pcs.
	SLIDING SUPPORT ASSEMBLY	ME	390042	C	EA	2					
80	RING ASSEMBLY	ME	390043	B	EA	2	NT2409	2		76906	10 pcs.
81	SUPPORT PIN	MB	390047	B	EA	4	R8,S2,L1	4		76914	68 pcs.
82	1.0 mm THK SHIM	MA	390275	A	EA	16	ICB Has				4 pcs.
83	0.5 mm THK SHIM	MA	390276	*	EA	16	IB4 Bin	16		76910	16 pcs.
84	M16 x 40.0 mm LG SHOULDER SCREW, 18-8 S.S.	MA	390277	*	EA	16	IB4 Bin	16		76913	264 pcs.
85	0.13 mm THK SHIM	MA	390480	*	EA	16	R2,S2,L4	16		79121	257 pcs.
86	0.25 mm THK SHIM	MA	390481	*	EA	24	R2,S2,L4	24		79122	393 pcs.
	Q2 INSULATION INSTALLATION ASSEMBLY	ME	390302	A	EA	1					
87	MLI END BLANKET	ME	390303	*	EA	2	P/N	2		N/A	4 pcs.
88	MLI MID BLANKET	ME	390304	*	EA	2	P/N	2		N/A	6 pcs.
89	MOUNTING LUG BLANKET	MC	390496	*	EA	8	Site 38	8		79873	199 pcs.
	Q2 INSTALLATION TIE-ROD ASSEMBLY	MC	390637	*	EA	4					

ORIGINA

TD - Engineering Fabr tion Component Kit List

	Description	Dwg Size	Number	Rev	Unit	Quantity Required	Location	Quantity Issued	E&F Verified	Routing Form Number	Spares Number / Comment
90	SHORT END THREAD ROD	MA	390635	*	EA	4	R2,2,2	4		81097	11 pcs.
91	JAM NUT (LH)	MA	393046	*	EA	8	IB4 Bin	8		80074	74 pcs.
92	JAM NUT (RH)	MA	393225	*	EA	16	IB4 Bin	16		80073	180 pcs.
93	COUPLING NUT (RH / LH)	MA	393226	*	EA	8	IB4 Bin	8		80075	68 pcs.
94	THREAD ROD (RH) 6 FT. LONG	MA	393227	*	EA	4	R7,2,4	4		80061	34 pcs.
95	THREAD ROD (LH) 3 FT. LONG	MA	393228	*	EA	4	R1,2,3	4		80072	32 pcs.

Traveler Title:	Specification No:	Revision:	DR No:
Q2 LQXB Cryostat Final Assembly Traveler	5520-TR-333644	D	HGQ-0469

Step No:	Drawing No:	Routing Form No:	Serial No:	Rework ID:
3.5	390206		LQXB06	0

Discrepancy Description:

During the building process, the leak check ticket for the vacuum vessel was lost.

Originator: Steve Gould

Date: 7/9/2004

Cause of Nonconformance:

Someone misplaced the leak check ticket.

Responsible Authority: Thomas Page

Date: 7/9/2004

Disposition:

Use vessel. All the vessels passed leak check.

Responsible Authority: Thomas Page

Date: 7/9/2004

Corrective Action to Prevent Recurrence:

Remove leak check tickets prior to performing any work on components. No traveler revision required.

Responsible Authority: Thomas Page

Date: 7/9/2004

Corrective Action/Disposition Verified By: John Szostak

Date: 7/27/2004

Will Configuration be affected?: ☐ YES ☑ NO

Identified problem area:

☐ Material ☐ Manpower ☑ Method ☐ Machine ☐ Measurement

Reviewed By: Bob Jensen

Date: 7/28/2004

Traveler Title:	Specification No:	Revision:	DR No:
Q2 LQXB Cryostat Final Assembly Traveler	5520-TR-333644	D	HGQ-0508

Step No:	Drawing No:	Routing Form No:	Serial No:	Rework ID:
6.3	ME 390083	77146	LQXB08	0

Discrepancy Description:

During the cleaning and tapping of the holes on this support band, one of the threaded inserts was found to be misaligned with the hole of the band.

Originator: Damon Bice

Date: 11/20/2004

Cause of Nonconformance:

PEM nut was not installed properly.

Responsible Authority: Thomas Page

Date: 11/24/2004

Disposition:

Remove PEM nut from shield bridge. Use this shield bridge on the center section of the shield and use a standard hex nut when installing this shield bridge.

Responsible Authority: Thomas Page

Date: 11/24/2004

Corrective Action to Prevent Recurrence:

None. No Traveler Change.

Responsible Authority: Thomas Page

Date: 11/24/2004

Corrective Action/Disposition Verified By: John Szostak

Date: 12/6/2004

Will Configuration be affected?: ☐ YES ☑ NO

Identified problem area:

☑ Material ☐ Manpower ☐ Method ☐ Machine ☐ Measurement

Reviewed By: Bob Jensen

Date: 12/6/2004

Revision Request Control Number: 1639

Specification Number: 5520 - TR - 333644 Current Revision: D

Traveler or Document Title Q2 LQXB Cryostat Final Assembly Traveler

Step #/Description of Revision:

1.4 Removed Step. "All personnel performing steps in this traveler must have documented training for this traveler and associated operating procedures."
3.2 Removed Step. "Add Insertion Rails per Vacuum Vessel Assembly(ME-390129)." Insertion rails no longer used.
5.14 Moved Step. "Weld the Retainer Clips (MA-390103) to the Cold Mass Outer Shell as per the Pipe Support Assembly (ME-390087) or (ME-390208)." New step 5.8 per Tom Page & Steve Gould.
5.29 Removed Step. "Measure the distance between the Suspension Rings at the bottom of the Threaded Rods. Install Threaded Rods (MC-390635 and MA-393227) after measurements." per Tom Page. Steps completed previously.
5.30 Removed Step. "Install bottom of shield (ME-390162, Qty 2) (ME-390163, Qty 2) (ME-390164)." per Tom Page.
5.31 Removed Step. "Install Center Retainers (MA-390086) before installing Support Bands (ME-390083). Install Aluminum Spacers (MA-390373) and screws to the End Sections before attaching the Support Bands." per Tom Page.
6.1 Added Step. "Tap the PEM nuts prior to installing shield. Use care in tightening screws so they don't break." Per Tom Page.
6.8 Modified Step. Added "The center blanket may need to be rotated 90 degrees. Tape the seams instead of using the Velcro, if necessary." DR No. HGQ-0466.
6.9 Modified Step. Moved "Tap the PEM nuts prior to installing shield. Use care in tightening screws so they don't break." to new step 6.1.
6.10 Modified Step. Moved to after step 5.20 per Steve Gould.
7.1 Modified Step. Changed "Green Putty" to "Pig Putty" per LQXB07.
8.0 Modified Step. Added new method of measuring Ls &Q per Rodger Bossert.
9.0 Added Step. "Final Preparations"

John Szostak	Jim Rife	6/8/2004
Originator	Responsible Authority	Date
Revision Incorporated into the Traveler:	John Szostak	12/17/2004
	Revision Incorporated By	Date
Process Engineering Final Review:	Bob Jensen	12/17/2004
	Process Engineering/Designee	Date

Instructions for the completion of the Revision Request Form

Note(s):

Multiple steps may be effected by one Revision Request Form but only one specific Traveler or Document may be effected by each Revision Request Form.

If completing this form by hand, a Revision Request Control Number must be obtained before processing.

If completing this form entirely by electronic means, the printed copy to be filed in the Process Engineering Office is to be initialed by the individual incorporating the Revision Request and the individual who reviewed the Traveler or Document.

Originator Instructions:

1) Specification Number: - Enter the Specification Number of the Traveler or Document to be revised. (Document title is inserted automatically from the spec. #)

2) Current Revision: - Enter the Revision of the Traveler or Document to be revised.

3) Step# / Description of the Revision: - Enter a description of the revision to be made and the step# it applies to, if applicable. If needed to describe the revision attach a copy of the page(s). If the revision is coming from a related document such as a Discrepancy Report or an Engineering Order attach a copy of that document to the Revision Request Form.

4) Originator: - Originator is the person generating the form. (Select Name from List)

5) Responsible Authority: - Responsible Authority is person responsible for the process in question. (Select Name from List)

Process Engineering Office Instructions:

1) Revision Incorporated into the Traveler: - Signature of the individual who incorporated the revision.

2) Process Engineering Final Review: - Review the Traveler or Document revised, sign and date the form. The original completed Revision Request Form will be retained by the Process Engineering Office in the Revision Request Binder.

Revision Request Control Number: 1709

Specification Number: 5520 - TR - 333644 Current Revision: E

Traveler or Document Title Q2 LQXB Cryostat Final Assembly Traveler

Step #/Description of Revision:

3.4 Modified Step. Changed to "Attach Leak Check sticker for the Vacuum Vessel Assembly (ME-390003) per ES-107240." Per LQXB08.
4.15 Added Step. "If needed, perform a stretched wire measurement of the system, noting the relative position and roll of the three magnetic elements to each other. Perform Stretched Wire Measurement?" per LQXB08.
5.24 Modified Step. Moved Step to before Step 5.21 (Pressure testing the Cold Mass) per LQXB08.
5.25 Modified Step. Moved Step to before Step 5.21 (Pressure testing the Cold Mass) per LQXB08.
5.26 Modified Step. Moved Step to before Step 5.21 (Pressure testing the Cold Mass) per LQXB08.
5.30 Modified Step. Moved to before Assembling the Corrugated Tube Assembly. Per LQXB08. (New Step 7.7).
8.1 Modified Step. Reversed Hpot and Lpot Voltage Taps for Inductance and Q-factor, in table, to allow for correct values taken at Q2a end of Magnet. Per LQXB08.

John Szostak	Jim Rife	1/20/2005
Originator	Responsible Authority	Date

Revision Incorporated into the Traveler:

Revision Incorporated By	Date

Process Engineering Final Review:

Process Engineering/Designee	Date

Instructions for the completion of the Revision Request Form

Note(s):

Multiple steps may be effected by one Revision Request Form but only one specific Traveler or Document may be effected by each Revision Request Form.

If completing this form by hand, a Revision Request Control Number must be obtained before processing.

If completing this form entirely by electronic means, the printed copy to be filed in the Process Engineering Office is to be initialed by the individual incorporating the Revision Request and the individual who reviewed the Traveler or Document.

Originator Instructions:

1) Specification Number: - Enter the Specification Number of the Traveler or Document to be revised. (Document title is inserted automatically from the spec. #)

2) Current Revision: - Enter the Revision of the Traveler or Document to be revised.

3) Step# / Description of the Revision: - Enter a description of the revision to be made and the step# it applies to, if applicable. If needed to describe the revision attach a copy of the page(s). If the revision is coming from a related document such as a Discrepancy Report or an Engineering Order attach a copy of that document to the Revision Request Form.

4) Originator: - Originator is the person generating the form. (Select Name from List)

5) Responsible Authority: - Responsible Authority is person responsible for the process in question. (Select Name from List)

Process Engineering Office Instructions:

1) Revision Incorporated into the Traveler: - Signature of the individual who incorporated the revision.

2) Process Engineering Final Review: - Review the Traveler or Document revised, sign and date the form. The original completed Revision Request Form will be retained by the Process Engineering Office in the Revision Request Binder.