Document ID:

3590

Q2 LQXB Cryostat Final Assembly Traveler

333644 / Rev. E

Job No:	**248**
E + F Project/Task No.:	**300/1.1.1.6.2**
M + S Project/Task No.:	**300/1.1.1.6.2**

Place This Side Down For Scanning!!!

Magnet Travelers

LQXB09-0

Document ID:

3590

Job No.:

248

Project/Task No.

300/1.1.1.6.2

Series:

LQXB

Serial No:

LQXB09

Rework ID:

0

Specification No.:

333644

Revision:

E

LQXB09-0

Fermi National Accelerator Laboratory
Batavia, IL 60510

LARGE HADRON COLLIDER
Q2-LQXB
CRYOSTAT FINAL ASSEMBLY TRAVELER

Reference Drawing(s):
Vacuum Vessel and Cryostat Assembly
(ME-390206)

Project/Task Number: *300/1.1.1.6.2*

Released By: *John Szostak* | **Magnet/Device Series:** *LQXB*

Date Issued: *1/20/2005 7:51:21 AM* | **Scanned Pages:** 59

Prepared by: J. Szostak

Title	Signature	Date
TD / E&F Process Engineering	*Bob Jensen* Bob Jensen / Designee	*12/17/04*
TD / LHC Production Supervisor	*Jim Rife* Jim Rife / Designee	*12/17/04*
TD / LHC Production Engineer	*Rodger Bossert* Rodger Bossert / Designee	*12/17/04*
TD / LHC Production Engineer Cryostat	*Tom Page* Tom Page / Designee	*12/20/04*
TD / LHC Project Engineer Cryostat	*Tom Nicol* Tom Nicol / Designee	*12/20/04*
TD / LHC Program Manager	*Jim Kerby* Jim Kerby / Designee	*12/17/04*

Revision Page (1 of 4)

Revision	Step No.	Revision Description	TRR No.	Date
None	N/A	Initial Release	N/A	6/17/02
A	3.1	Removed Step. Not necessary.	1485	10/2/02
	3.2	Modified Step. Changed to "Add Insertion Rails per Vacuum Vessel Assembly (ME-390129)."		
	4.1	Modified Step. Added "Suspension System Adjusting Screw, M16 x 70mm SHCS and Washer" to the Parts table.		
	4.3	Modified step. "Install the Suspension System Adjusting Screws (MB-390039), M16 Screw and washer into the Vacuum Vessel to hold the Fixed Support Assembly in place. Coat all screw heads with Molybdenum disulfide prior to installation."		
	4.6	Modified step. "Install the Suspension System Adjusting Screws (MB-390039), M16 Screw and washer into the Vacuum Vessel to hold the Sliding Support Assemblies in place. Coat all screw heads with Molybdenum disulfide prior to installation."		
	4.11	Modified Step. "Slide the Suspension System over the Cold Mass and place on tooling. The Suspension system may be disassembled during this step. Record shim sizes and locations prior to disassembly." New Step 4.13.		
	5.1	Added Step. "Place the Cold mass assembly on the insertion rail system."		
	5.3	Added Step. "Install Cold mass Insulation per Cold mass Insulation Installation (ME-390302)."		
	5.5	Added Step. "Using Pipe Supports as a template, cut the blankets around the Pipe Support Feet and slit blankets circumferentially at the Pipe Supports."		
	5.6	Added Step. "Remove Pipe Supports and blankets. Wrap blankets in plastic bag to keep clean for later use. Label blankets as they are removed for later positioning."		
	5.7	Added Step. "Install Pipe Supports to same location as in step 5.4."		
	5.16	Added Step. "Weld the Pipe Support Gussets to the Cold mass per Q2 Piping Assembly (ME-390208)."		
	6.0	Modified Steps per Tom Page.		
	7.1	Modified Steps per Tom Page.		
	7.2	Modified Steps per Tom Page.		
	7.3	Modified Steps per Tom Page.		
	7.4	Modified Steps per Tom Page.		
	7.5	Modified Steps per Tom Page.		
B	4.1	Modified Step. Changed to "Label the IP End and the Non-IP End of the Vacuum Vessel with a temporary sticker or equivalent." per Jim Rife.	1539	12/16/04
	5.0	Added Note "**Note(s): Do not use a strap wrench on the pipes.**" per **DR No. HGQ-0394.**		

Revision Page (2 of 4)

Revision	Step No.	Revision Description	TRR No.	Date
C	3.2	Added Step. "Inspect the transition area between the support sections and tube sections. Grind smooth if necessary."	1570	11/18/03
	3.3	Added Step. "Clean the Vacuum Vessel using a vacuum cleaner or equivalent."		
	3.8	Modified Step. Added "Tap out holes with M10 – 1.5 Tap. Move Vessel to Table."		
	4.9	Added Step. "Measure the distance between the Suspension Rings at the bottom of the Threaded Rods. Install Threaded Rods after measurements."		
	4.10	Modified Step. Moved "Configure the Suspension Tooling for Q2 Assembly per (ME-364604). Place Suspension Assembly on the tooling and make necessary adjusts to the tooling." to New step 4.11.		
	4.16	Modified Step. Added "Install shims between the Brass Slide Bars and the Stainless Steel Blocks on each support as needed. Record Shim size and location below." New Step 4.17.		
	5.0	Modified, rearranged and added steps from step 5.13 to 5.35, per Notes taken by Steve Gould and Tom Page on LQXB02.		
	5.8	Added Step. "Install Q2 Installation Tie Rod Assembly (MC-390635) and Tie Bar Retaining Clamp (MB-390136) as per Q2 Cryostat Assembly - Internal Piping (ME-390208)." per traveler LQXB03-0.		
	5.18	Modified Step. Changed Quantity from 2 ea to 4 ea. "...Pumping Line Pipe Stop (MB-390149), (4 ea.) and Cool Down Line Pipe Stop (MB-390150) (4 ea.)."		
	5.19	Modified Step. Changed Quantity from 2 ea to 4 ea. "...Pumping Line Pipe Stop (MB-390149), (4 ea.) and Cool Down Line Pipe Stop (MB-390150) (4 ea.)."		
	5.20	Modified Step. Changed Technician Signoff to Weldor Signoff.		
	5.21	Modified Step. Changed to "Clean the following parts fromQ2 Heat Exchanger Corrugated Tube Assembly (ME-390143)." Added Table. New step 5.35.		
	5.22	Modified Step. Moved to after Suspension System Adjusting Screws are installed. New Step 7.7		
	5.23	Modified Step. Moved to after Suspension System Adjusting Screws are installed. New Step 7.8		
	6.1	Moved Step. Moved to New Step 6.2. "Install the Cold mass MLI Blankets per (ME-390302) and in the same position as Step 5.6." Cannot Lift Cold Mass with Blankets installed.		
	6.2	Moved Step. Moved to New Step 6.1. "Lift the Cold Mass Assembly and place the Center Section (ME-390164) and End Sections (ME-390162) on the Insertion Rails. Lower the Cold mass back onto the rails ensuring the holes in the Shield Sections line up with Support Rollers."		
	7.8	Removed Step. " Install the Conflat flanges with copper gaskets on the Vacuum Vessel as per the General Assembly (ME-390000)." Conflat Flanges installed in IB#1.		

Revision Page (3 of 4)

Revision	Step No.	Revision Description	TRR No.	Date
D	Cover Page	Modified. Added signoff for Rodger Bossert for Final Electrical Steps in traveler.	1586	2/2/04
	3.1	Added Step. "Record the Vacuum Vessel Serial Number." per Jim Rife.		
	4.9	Modified Step. Moved to after Leak Checks. (New Step 5.34)		
	4.11	Modified Step. Changed ½" to 2" per Steve Gould.		
	5.8	Added Step. "Install Q2 Installation Tie Rod Assembly (MC-390635) and Tie Bar Retaining Clamp (MB-390136) as per Q2 Cryostat Assembly - Internal Piping (ME-390208)."		
	5.15	Modified Step. Changed to Technician Signoff.		
	5.21	Removed Step. "Re-install the Threaded Rods and lock into place." per TR-333644, LQXB04.		
	5.22	Remove Step. "Perform a Stretched Wire Measurement." per TR-333644, LQXB04.		
	5.23	Removed Step. "Insert the Q2 Pumping Line Tube (MB-390147) and Q2 Cool Down Line Tube (MB-390146)." Completed in step 5.10.		
	5.24	Removed Step. "Weld Pumping Line End Flange (MA-390032) to the Q2 Pumping Line Tube (MB-390147)." Completed in step 5.12.		
	5.25	Removed Step. "Weld Cool Down Line End Flange (MA-390033) to the Q2 Cool Down Line Tube (MB-390146)." Completed in step 5.12.		
	6.9	Modified Step. Added "Tap the PEM nuts prior to installing shield. Use care in tightening screws so they don't break." per DR No. **HGQ-0441**.		
	7.6	Modified Step. Added Note. "**Note(s): Ensure proper lubrication on adjusting screws. Check threads on screw and vacuum vessel prior to assembly and fix if necessary.**"		
	8.0	Added Step. Added Final Electrical Inspection per Jim Rife.		
E	1.4	Removed Step. "All personnel performing steps in this traveler must have documented training for this traveler and associated operating procedures."	1639	12/17/04
	3.2	Removed Step. "Add Insertion Rails per Vacuum Vessel Assembly (ME-390129)." Insertion rails no longer used.		
	5.14	Moved Step. "Weld the Retainer Clips (MA-390103) to the Cold Mass Outer Shell as per the Pipe Support Assembly (ME-390087) or (ME-390208)." New step 5.8 per Tom Page & Steve Gould.		
	5.29	Removed Step. "Measure the distance between the Suspension Rings at the bottom of the Threaded Rods. Install Threaded Rods (MC-390635 and MA-393227) after measurements." per Tom Page. Steps completed previously.		
	5.30	Removed Step. "Install bottom of shield (ME-390162, Qty 2) (ME-390163, Qty 2) (ME-390164)." per Tom Page.		
	5.31	Removed Step. "Install Center Retainers (MA-390086) before installing Support Bands (ME-390083). Install Aluminum Spacers (MA-390373) and screws to the End Sections before attaching the Support Bands." per Tom Page.		
	6.1	Added Step. "Tap the PEM nuts prior to installing shield. Use care in tightening screws so they don't break." Per Tom Page.		
	6.8	Modified Step. Added "The center blanket may need to be rotated 90 degrees. Tape the seams instead of using the Velcro, if necessary." **DR No. HGQ-0466.**		
	6.9	Modified Step. Moved "Tap the PEM nuts prior to installing shield. Use care in tightening screws so they don't break." to new step 6.1.		
	6.10	Modified Step. Moved to after step 5.20 per Steve Gould.		
	7.1	Modified Step. Changed "Green Putty" to "Pig Putty" per LQXB07.		
	8.0	Modified Step. Added new method of measuring Ls &Q per Rodger Bossert.		
	9.0	Added Step. "Final Preparations"		

Ensure appropriate memos and specific instructions are placed with the traveler before issuing the sub traveler binder to production.

1.0 General Notes

1.1 All steps that require a sign-off shall include the Technician/Inspectors first initial and full last name.

1.2 No erasures or white out will be permitted to any documentation. All incorrectly entered data shall be corrected by placing a single line through the error, initial and date the error before adding the correct data.

1.3 All Discrepancy Reports issued shall be recorded in the left margin next to the applicable step.

1.4 Personnel shall perform all tasks in accordance with current applicable ES&H guidelines and those specified within the step.

1.5 Cover the product/assembly with Green Herculite (Fermi stock 1740-0100) when not being serviced or assembled.

2.0 Parts Kit List

2.1 Attach the completed Parts Kit for this production operation to this traveler. Ensure that the serial number on the Parts Kit matches the serial number of this traveler. Verify that the Parts Kit received is complete.

J. Ayoostah
Process Engineering/Designee

1/20/05
Date

3.0 Vacuum Vessel Preparation and Painting

3.1 Record the Vacuum Vessel Serial Number.

Q2-9

Technician(s) Date 2/15/05

3.2 Inspect the transition area between the support sections and tube sections. Grind smooth if necessary.

Technician(s) Date 2/15/05

3.3 Clean the Vacuum Vessel using a vacuum cleaner or equivalent.

Technician(s) Date 2-10-05

3.4 Leak Check the Vacuum Vessel Assembly (ME-390003) per ES-107240 and record results in table below.

Part No.		DETERMINATION OF DETECTABLE LEAK						
PART NO. 3901299D		SCALE UNITS BEFORE HELIUM PROBE	SCALE UNITS WHILE ENCLOSURE FLOODING	Q2-9 DETERMINATION OF MINIMUM DETECTABLE LEAK				
DATE TIME	OPERATOR'S LAST NAME			MDS	((Response - Bckgnd)	Leak Value)	=	MDL
12/19/02	LIRA	55	55	2	350	55	$4.75E^{-8}$	$3.22E^{-10}$

Inspector Date 2/15/05

3.5 Prepare the outside of the Vacuum Vessel (ME-390003) for painting by cleaning with Ethyl Alcohol (Fermi stock 1920-0550) and Kimwipes (Fermi stock 1660-2500) or equivalent.

Technician(s) Date 2-12-05

3.6 Mask the Stainless Steel Components of the Vacuum Vessel for painting.

Technician(s) Date 2-12-05

3.7 Prime the Vacuum Vessel using Rust-o-leum (Fermi stock 1825-4000).

Technician(s) _____ Date 2-12-05

3.8 Verify that the Screws (MA-393036) will thread easily into the appropriate holes in the Vacuum Vessel (ME-390126). If necessary, tap out holes with M10 – 1.5 Tap. Move Vessel to Table.

Lead Person _____ Date 2-10-05

3.9 Paint the Vacuum Vessel using Flambeau Red (Fermi stock 1825-3710).

Vacuum Vessel
(ME-390129)

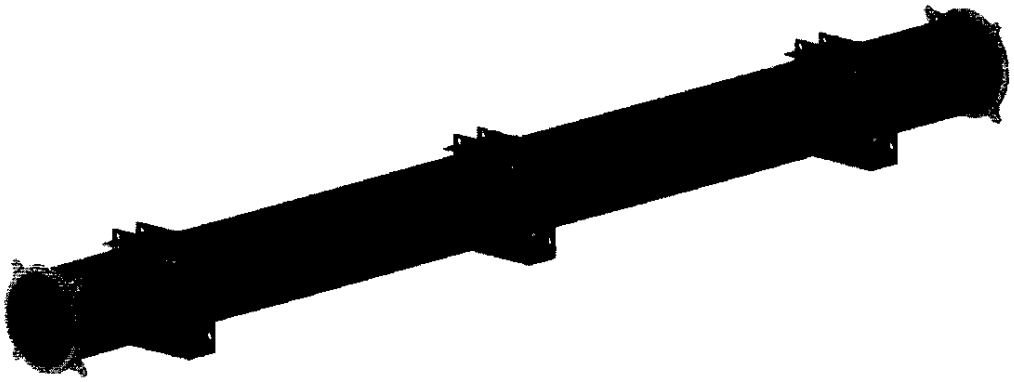

Technician(s) _____ Date Feb 12, 2005

4.0 Suspension System

4.1 Clean the Suspension System with Ethyl Alcohol (Fermi stock 1920-0550) and Kimwipes (Fermi stock 1660-2500) or equivalent.

Part Name	Part Number	Quantity	Completed
Fixed Support Assembly	(ME-390041)	1	✓
Sliding Support Assembly	(ME-390042)	2	✓
Tie Bar Assembly	(ME-390167)	4	✓
Tie Bar Shim, .250"	(ME-390118)	6	✓
Tie Bar Shim, .093"	(ME-390119)	6	✓
Tie Bar Shim, .031"	(ME-390120)	6	✓
Suspension System Adjusting Screw	(MB-390039)	12	✓
M16 x 70mm SHCS	(MA-393021)	12	✓
Washer	(MA-390377)	12	✓

Label the IP End and the Non-IP End of the Vacuum Vessel with a temporary sticker or equivalent.

C. Fuang
Technician(s)

2-11-05
Date

4.2 Insert the Fixed Support Assembly (ME-390041) into the vacuum vessel and position at the center support.

C. Fiang — Technician(s) 2 11 05 — Date

4.3 Install the Suspension System Adjusting Screws (MB-390039), M16 Screw and washer into the Vacuum Vessel to hold the Fixed Support Assembly in place. Coat all screw threads with Molybdenum disulfide prior to installation.

C. Fiang — Technician(s) 2-11-05 — Date

4.4 Adjust the Vertical and rotational alignment of the Supports using the Suspension System Adjusting Screws (MB-390039). Ensure all four screws are in contact with the Support and that Diametrically Opposing Support Lugs are equidistant from the Vacuum Vessel Wall.

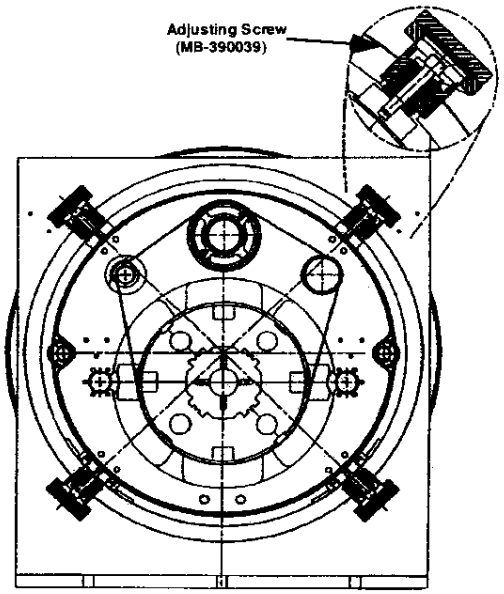

C. Fiang — Technician(s) 2-11-05 — Date

4.5 Insert the Sliding Support Assemblies (ME-390042) in to the Vacuum Vessel and position at each of the outboard support sections.

C. Fuang — 2-11-05

Technician(s) — Date

4.6 Install the Suspension System Adjusting Screws (MB-390039), M16 Screw and washer into the Vacuum Vessel to hold the Fixed Support Assembly in place. Coat all screw threads with Molybdenum disulfide prior to installation.

[redacted]

C. Fuang — 2-11-05

Technician(s) — Date

4.7 Adjust the Vertical and rotational alignment of the Supports using the Suspension System Adjusting Screws (MB-390039). Ensure all four screws are in contact with the Support and that Diametrically Opposing Support Lugs are equidistant from the Vacuum Vessel Wall.

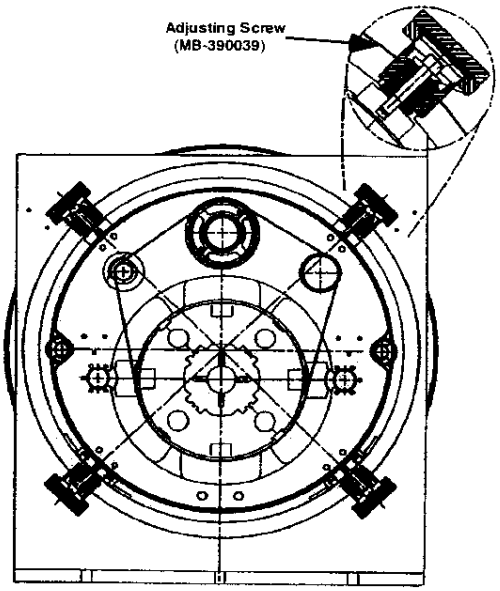

C. Fuang — 2-11-05

Technician(s) — Date

4.8 Assemble the Suspension System using the Fixed Support Assembly (ME-390041), the Sliding Support Assemblies (ME-390042) and the Tie Bar Assemblies (MC-390167). Insert Tie Bar Shims (MC-390118),(MB-390119) and (MB-390120) between the Sliding Support Assemblies (ME-390042) and the Tie Bar Assemblies (MC-390167) as required. (Reference drawing: ME-390310)

O. Fuang — Technician(s) — 2 11 05 — Date

4.9 Label the IP End Support and the Non-IP End Support. (Writing on the G-11 Support is acceptable).

O. Fuang — Technician(s) — 2 11 05 — Date

4.10 Loosen each Suspension System Adjusting Screw (MB-390039) 2 turns and remove the Suspension System from the Vacuum Vessel.

O. Fuang — Technician(s) — 2 12 05 — Date

4.11 Configure the Suspension Tooling for Q2 Assembly per (ME-364604). Place Suspension Assembly on the tooling and make necessary adjusts to the tooling.

Technician(s) — 2-16-05 — Date

4.12 Assemble the Outboard Suspension Mounting Brackets (MD-390280) to the Sliding Support Assemblies (outboard supports, ME-390042).

Technician(s) — 2-16-05 — Date

4.13 Assemble the Center Suspension Mounting Brackets (MD-390281) to the Sliding Fixed Assemblies (center support, ME-390041).

Technician(s) — 2/16/05 — Date

4.14 Slide the Suspension System over the Cold Mass and place on tooling. The Suspension system may be disassembled during this step. Record shim sizes and locations prior to disassembly.

Note(s):

Ensure that the Suspension System is configured properly to the Cold Mass with respect to the IP and Non-IP Ends.

Technician(s) _____ Date 2/16/05

X 4.15 Verify locking collars exist only at center support.

Lead Person _____ Date 2/16/05

Ensure that (each) ~~[illegible]~~ TBR ~~[illegible]~~ SC & SS block assembly is centered equal between each support mbr. E. Check

4.16 Establish alignment between the Cold Mass and the Support system. Install shims between the Brass Slide Bars and the Stainless Steel Blocks on each support as needed.

Record Shim size and location below.

No TRR

~~TEC~~ QA

East-North	.030	**East-South**	.030
Center-North	.055	**Center-South**	.055
West-North	20 mil	**West-South**	20 mil

SNC

Technician(s) _____ Date 2/16/05

X 4.17 Verify the Alignment of the Cold Mass and the Support System.

Crew Chief _____ Date 2/16/05

4.18 Weld the Cold Mass to the Outboard Cold Mass Brackets as per (ME-390310).

Weldor(s) _____ Date 2-16-05/2/12/05

5.0 Piping Assembly

Note(s):
Do not use a Strap Wrench on the Pipes.

5.1 Place the Cold Mass Assembly on the insertion rail system.

Technician(s) _____ Date 2/17/05

5.2 Clean the Pipe Supports with Ethyl Alcohol (Fermi stock 1920-0550) and Kimwipes (Fermi stock 1660-2500) or equivalent.

Technician(s) _____ Date 2/17/05

5.3 Install Cold mass Insulation per Cold mass Insulation Installation (ME-390302).

Technician(s) _____ Date 2/17/05

5.4 Install the Pipe Supports (MD-390258)(Qty. 4) on the Cold Mass per (ME-390208).

Note(s):
A Tie Bar may be disconnected, if necessary, from the Fixed Support Assembly to install the central two pipe supports.

PIPE SUPPORT ASSEMBLY

Technician(s) _____ Date 2/17/05 / 2/18/05

5.5 Using Pipe Supports as a template, cut the blankets around the Pipe Support Feet and slit blankets circumferentially at the Pipe Supports.

Technician(s) _____ Date Feb 18 2005

5.6 Remove Pipe Supports and blankets. Wrap blankets in plastic bag to keep clean for later use. Label blankets as they are removed for later positioning.

Technician(s) _____ Date Feb 18, 2005

5.7 Install Pipe Supports to same location as in step 5.4.

Technician(s) _____ Date 2/18/05

5.8 Weld the Retainer Clips (MA-390103) to the Cold Mass Outer Shell as per the Pipe Support Assembly (ME-390087) or (ME-390208).

Weldor(s) _____ Date 2/18/05

5.9 Install Q2 Installation Tie Rod Assembly (MC-390635) and Tie Bar Retaining Clamp (MB-390136) as per Q2 Cryostat Assembly - Internal Piping (ME-390208).

Technician(s) _____ Date 2/18/05

5.10 Clean the Q2 Heat Exchanger Outer Shell (MD-390145), Q2 Pumping Line Tube (MB-390147) and the Q2 Cool Down Line Tube (MB-390146) with Ethyl Alcohol (Fermistock 1920-0550) and Kimwipes (Fermi stock 1660-2500) or equivalent.

Technician(s) Mark Shown Date 2/18/05

5.11 Slide the Q2 Heat Exchanger Outer Shell (MD-390145), Q2 Pumping Line Tube (MB-390147) and the Q2 Cool Down Line Tube (MB-390146) through all seven supports.

Note(s):

Ensure the cross over hole in the Heat Exchanger Pipe is lined up with the hole in the Cold Mass Center Tube.

Technician(s) _____ Date 2/18/05

5.12 Clean the Pumping Line Flanges (MB-390032), the Cool Down Line Flanges (MB-390033) and the Heat Exchanger Outer Shell Flanges (MB-390031) with Ethyl Alcohol (Fermi stock 1920-0550) and Kimwipes (Fermi stock 1660-2500) or equivalent.

Technician(s) _____ Date 2/18/05

5.13 Weld the Heat Exchanger Outer Shell Flanges (MB-390031), the Pumping Line Flanges (MB-390032) and the Cool Down Line Flanges (MB-390033) to the ends of the corresponding pipes.

Weldor(s) _____ Date 2-19-05

5.14 Clean the Cold Mass and the Retainer Clips (MA-390103) with Ethyl Alcohol (Fermi stock 1920-0550) and Kimwipes (Fermi stock 1660-2500) or equivalent.

Technician(s) _____ Date 2-18-05

5.15 Clean the Pipe Support Gussets with Ethyl Alcohol (Fermi stock 1920-0550) and Kimwipes (Fermi stock 1660-2500) or equivalent.

Technician(s) _____ Date 2-18-05

5.16 Weld the Pipe Support Gussets to the Cold mass per Q2 Piping Assembly (ME-390208).

Weldor(s) _____ Date 2/15/05

5.17 Clean the Heat Exchanger Connection (MC-390111) with Ethyl Alcohol (Fermi stock 1920-0550) and Kimwipes (Fermi stock 1660-2500) or equivalent.

Technician(s) _____ Date 2/18/05

5.18 Install the Connector (Heat Exchanger to Cold Mass) (MC-390111). Verify alignment and then purge Cold Mass and Q2 Heat Exchanger Outer Shell (MD-390145), with Argon Gas.

Technician(s) _____ Date 2/19/05

5.19 Weld the Connector (Heat Exchanger to Cold Mass) (MC-390111) to the Q2 Heat Exchanger Outer Shell (MD-390145) and to the Cold Mass Center Tube per (ME-390208, Section F-F).

Weldor(s) _____ Date 2/19/05

TRR#1723
Remove Due to STEP 5.9

5.20 Insert 4.5k Intercept Line Pipes per (ME-390208).

Technician(s) _____ Date 2/19/05

5.21 Install the Tie Bar Retaining Clamps (Qty. 8)(MB-390136) per Q2 Internal Piping Assembly (ME-390208).

Technician(s) _____ Date 2-18-05

5.22 Pressure test the Cold Mass Assembly at 375 psi Nitrogen per Section 5034 of the Fermilab ES&H Manual and UG-100 of the Code.

Warning:

The test is to be performed after normal working hours and only personnel directly involved with the test will be present.

Inspector _____ Date 2/21/05

5.23 Leak Check the Cold Mass Assembly. (This will include the Exchanger Outer Shell).

Part No.	DETERMINATION OF DETECTABLE LEAK						
Cold Mass	M.D.S. ÷ ((Response – Background) ÷ Leak value) = MDL						
OPERATOR'S LAST NAME	SCALE UNITS BEFORE HELIUM PROBE	SCALE UNITS WHILE ENCLOSURE FLOODING	MDS	Response	Background	Leak Value	MDL
Wilson	80X1	80X1	2	2	55X5	3.85 x E-8	4.16 x E-10

Inspector _____ Date 2-25-05

TRR# 1709

5.24 Clean the Pumping Line Pipe Stop (MB-390149), (4 ea.) and the Cool Down Line Pipe Stop (MB-390150) (4 ea.) with Ethyl Alcohol (Fermi stock 1920-0550) and Kimwipes (Fermi stock 1660-2500) or equivalent.

Technician(s) _____ Date 2/14/05

Move to before pressure check.

5.25 Weld the Pumping Line Pipe Stop (MB-390149), (4 ea.) and Cool Down Line Pipe Stop (MB-390150) (4 ea.) on the Pumping Line and Cool Down Lines.

Weldor(s) _____ Date 2/14/05

5.26 Weld the fixed collar to the 4.5k Intercept Line Tube (MB-390204) per (ME-390208).

Weldor(s) _____ Date 2/14/05

5.27 Leak Check the Cool Down Line (MB-390146).

Part No. Cool Down Line	DETERMINATION OF DETECTABLE LEAK						
	M.D.S. ÷ ((Response – Background) ÷ Leak value) = MDL						
OPERATOR'S LAST NAME	SCALE UNITS BEFORE HELIUM PROBE	SCALE UNITS WHILE ENCLOSURE FLOODING	MDS	Response	Background	Leak Value	MDL
Wilson	50X1	50X1	2	70X5	50X1	3.85 xE-8	2.56 xE-10

Inspector 2-25-05 Date

5.28 Leak Check the Q2 Pumping Line Tube (MB-390147).

Part No. Pumping line	DETERMINATION OF DETECTABLE LEAK						
	M.D.S. ÷ ((Response – Background) ÷ Leak value) = MDL						
OPERATOR'S LAST NAME	SCALE UNITS BEFORE HELIUM PROBE	SCALE UNITS WHILE ENCLOSURE FLOODING	MDS	Response	Background	Leak Value	MDL
Wilson	62X1	62X1	2	54X5	62X1	3.91 xE-8	3.75 xE-10

need 3' intercept line tubes leak pieces not 1

Inspector 2-22-05 Date

5.29 Leak check 4.5k Intercept Lines Tubes (MB-390204).

3 lines 6 Tubes

Part No. #1	DETERMINATION OF DETECTABLE LEAK						
	M.D.S. ÷ ((Response – Background) ÷ Leak value) = MDL						
OPERATOR'S LAST NAME	SCALE UNITS BEFORE HELIUM PROBE	SCALE UNITS WHILE ENCLOSURE FLOODING	MDS	Response	Background	Leak Value	MDL
Wilson	62X1	62X1	2	50X5	62X1	3.91 xE-8	4.15 xE-10

TAR# 1723

Inspector 2-22-05 Date

TAR# 1709

MOVE TO AFTER STEP # 7.6. S. Gould 3/16/05

5.30 Clean the following parts fromQ2 Heat Exchanger Corrugated Tube Assembly (ME-390143).

Part Name	Part Number	Quantity	Completed
Corrugated Tube Weldment	(ME-390394)	1	✓
Corrugated Tube Support	(MB-390028)	8	✓
Corrugated Tube Restrictor	(ME-390029)	2	✓

Technician(s) Ed + Steve

Date 2/2/05

6.0 Shield Assembly

6.1 Tap the PEM nuts prior to installing shield. Use care in tightening screws so they don't break.

Technician(s) _____ Date 2/3/05

6.2 Lift the Cold Mass Assembly and place the Center Section (ME-390164) and End Sections (ME-390162) on the Insertion Rails. Lower the Cold mass back onto the rails ensuring the holes in the Shield Sections line up with Support Rollers.

Technician(s) _____ Date 2/25/05

6.3 Insert the Mid Sections (ME-390163) and the Support Bands (MD-390083).

Technician(s) _____ Date 2-25-05

6.4 Assemble the bottom half of the shield. Leave all bolts loose. Spray all screw threads with Molybdenum.

Lower Shield Section
(ME-390082)

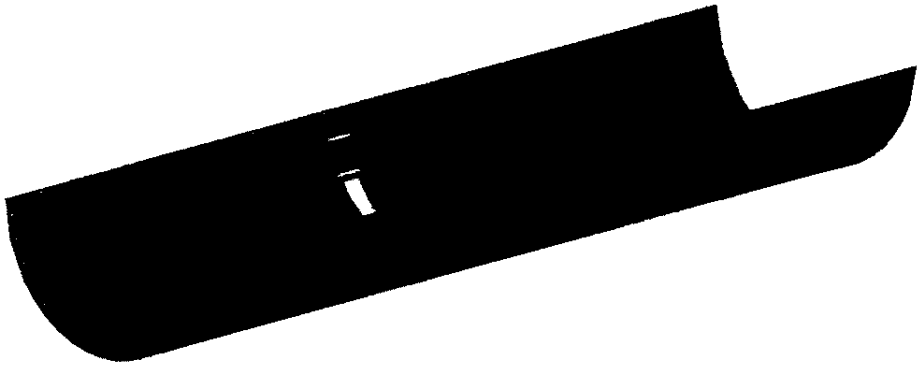

Technician(s) _____ Date 2-25-05

6.5 Assemble the Cooling Tubes (MD-390165) to the Bottom Half of the Shield.

Technician(s) _____ Date 2-26-05

6.6 Lift the Cold mass and place the Shield Inner and Outer MLI Blankets (ME-390313 & ME-390314) onto the insertion Rails in the correct orientation.

Note(s):

Place the Outer Blanket (ME-390314) on the Rails first.

Technician(s) _____ Date 2-26-05

6.7 Lower the Cold mass onto the rails. Ensure the slits in the blankets line up with Support Rollers.

Technician(s) _____ Date 2-26-05

6.8 Install the Cold Mass MLI Blankets per (ME-390302) and in the same position as Step 5.6. The center blanket may need to be rotated 90°. Tape the seams instead of using the Velcro, if necessary.

Technician(s) Randy, Jorge, Jackie, Mark _____ Date 2-28-05

6.9 Cut and install the pipe MLI blankets per Q2 Piping Insulation (ME-390306).

Technician(s) Randy, Jorge, Jackie _____ Date 2-28-05

6.10 Install the Upper Shield per Q2 Thermal Shield Assembly (ME-390161). Spray all screw threads with Molybdenum.

Technician(s) _____ Date 2-28-05

6.11 Install the Shield Blankets (ME-390313 & ME-390314). Cutouts will have to be made for the Upper Support Lugs.

Technician(s) _____ Date 2-28-05

7.0 Cold Mass Insertion into the Vacuum Vessel

7.1 Install Pig Putty between the Vacuum Vessel and the Insertion Rails.

Technician(s) _____ Date 3-1-05

7.2 Install the Cold Mass Pull-in Tooling.

Technician(s) _____ Date 3-1-05

7.3 Mount the Pneumatic Winch to floor on the West side of the Vacuum Vessel.

Technician(s) _____ Date 3-1-05

7.4 Connect the cable to the Pull-in Tooling.

Technician(s) _____ Date 3-11-05

7.5 Pull the Cold mass Assembly into the Vacuum Vessel.

Technician(s) _____ Date 3/11/05

7.6 When the Cold Mass is fully inserted, install the Suspension System Adjusting Screws (MB-390039).

Note(s):

Ensure proper lubrication on adjusting screws. Check threads on screw and vacuum vessel prior to assembly and fix if necessary.

Technician(s) _____ Date 3-11-05

CLEAN PARTS HERE! = TRR#1709

7.7 Assemble Corrugated Tube Supports (MB-390028) and Restrictors (MB-390029) to the Heat Exchanger Corrugated Tube per (ME-390143).

Technician(s) _____ Date 3-11-05

7.8 Slide the Corrugated Tube Assembly (ME-390143) into the Heat Exchanger Outer Shell per (ME-390142).

Technician(s) _____ Date 3-11-05

DR# HGQ-538 (4161)

7.9 Adjust the Suspension System Adjusting Screw (MB-390039) as needed to center the Cold Mass in the Vacuum Vessel.

Technician(s) _____ Date 3/11/05

7.10 At the **Q2a** end, measure 1m 411.8 mm [55.58 in.] and cut the lead as per Q2 Module Assembly Q2a Lead End (ME-369895, sheet 3 of 4). Have a Weldor fuse the ends of the Superconducting Cable before shipping Magnet.

Technician(s) _____ Date 3/14/05

Weldor(s) _____ Date 3/14/05

DR# HGQ-0541 (4165)

7.11 At the **Q2b** end, measure 511.8 mm [20.15 in.] and cut the lead as per Q2 Module Assembly Q2b Lead End Details (ME-369895, sheet 2 of 4). Have a Weldor fuse the ends of the Superconducting Cable before shipping Magnet.

Technician(s) _____ Date 3/14/05

Weldor(s) _____ Date 3/14/05

8.0 Electrical Inspection

8.1 Perform an electrical inspection on each of the Individual Quadrants and the Cold Masses. Refer to the Valhalla and Leader Free Standing Coil Measurement Procedure (ES-292306).

To measure the resistance of a bussed Q2:

1. Use Valhalla Scientific 4300B digital micro-ohmmeter.
2. Set Test Current to 1 amp.
3. Set Scale to 2V full scale.
4. Turn temperature compensation on.
5. Turn test current off.
6. Put jumper between Q2a Q3 inner power lead and 5 KA bus as shown in figure.
7. Connect I_{HI} to the 5KA bus (Q2a Q3 inner power lead) as shown in figure.
8. Connect I_{LO} to the Q2b Q3 inner power lead as shown in figure.
9. Turn test current on.
10. Connect V_{HI} and V_{LO} buttons to voltage taps as shown below.
11. Read resistance and record in traveler.

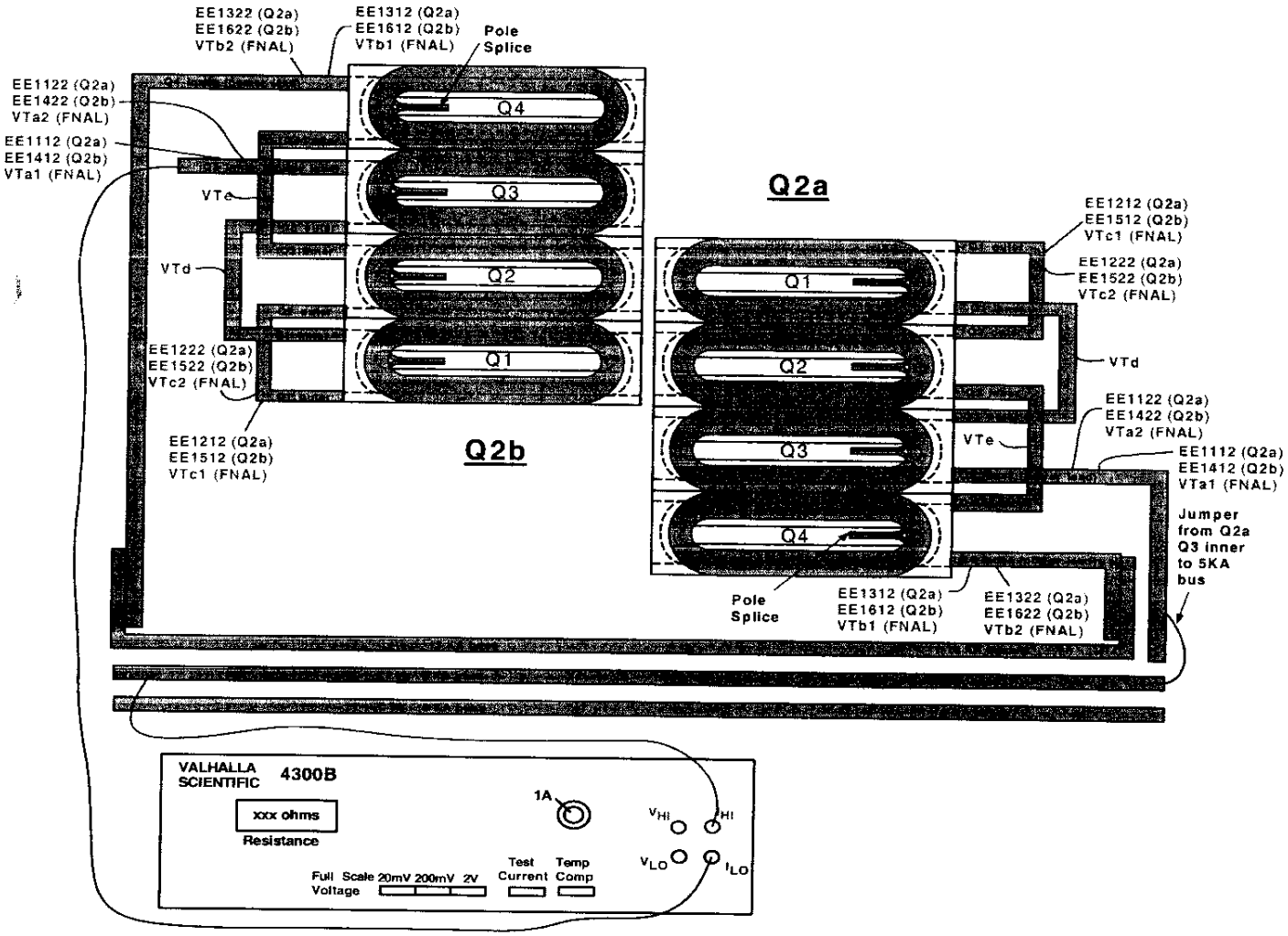

(Q2a) Resistance				Nominal ~ 560 to 585 mΩ
Voltage Tap Serial Numbers				Quadrant Total Resistance
Connect	Fermi	CERN	Quadrant	
V_{HI}	VTdQ2a	EMPTY	Quadrant 1	SNG ~~579.1~~ 568.7 mΩ
V_{LO}	VTc1Q2a	EE1212		
V_{HI}	VTc1Q2a	EE1212	Quadrant 2	SNG ~~579.6~~ 569.1 mΩ
V_{LO}	VTeQ2a	EMPTY		
V_{HI}	VTa1Q2a	EE1112	Quadrant 3	SNG ~~597~~ 568.5 mΩ
V_{LO}	VTdQ2a	EMPTY		
V_{HI}	VTeQ2a	EMPTY	Quadrant 4	569.1 mΩ
V_{LO}	VTb1Q2a	EE1312		

Note: When Measuring Total Cold Mass, Set Test Current to 0.1 Amp				
V_{HI}	VTa1Q2a	EE1112	Total Cold Mass	Nominal ~ 2.305 Ω
V_{LO}	VTb1Q2a	EE1312		2.277 Ω

Technician(s) _____ Date 3/14/05

Check resistance of Redundant Voltage Taps.

Q2a Redundant Voltage Taps			
Connect	Fermi	CERN	Resistance
V_{HI}	VTa2Q2a	EE1122	1138 m Ω
V_{LO}	VTc2Q2a	EE1222	
V_{HI}	VTc2Q2a	EE1222	1139 m Ω
V_{LO}	VTb2Q2a	EE1322	

Technician(s) _____ Date 3/14/05

To measure Ls and Q of a Bussed Q2a:

1. Use Agilent 4263B LCR Meter.
2. Turn power on by pushing Line button. Wait 30 seconds until display screen is lit.
3. Recall program #1. To do this, push recall (Rcl), then push the #1, then push Enter.
4. Push Auto/Hold button to release hold.
5. Verify that the frequency displayed in the upper right corner of the display screen is 1000 Hz and the level recorded in the lower right corner of the display screen is 1V or 1000 mV.
6. Connect jumper between Q2a/Quadrant 3 inner power lead and 5KA bus as shown in figure.
7. Connect H_{cur} to Q2b/Quadrant 3 inner power lead as shown in figure.
8. Connect L_{cur} to 5KA bus as shown in figure.
9. Connect H_{pot} and L_{pot} buttons to voltage taps as shown below.

To measure Q2a:

- To measure Q1, connect H_{pot} to VTc1 (EE1212 for Q2a), and L_{pot} to VTd.
- To measure Q2, connect H_{pot} to VTe, and L_{pot} to VTc1 (EE1212 for Q2a).
- To measure Q3, connect H_{pot} to VTd and L_{pot} to VTa1 (EE1112 for Q2a).
- To measure Q4, connect H_{pot} to VTb1 (EE1312 for Q2a), and L_{pot} to VTe.
- To measure total, connect H_{pot} to VTb1 (EE1312 for Q2a), and L_{pot} to VTa1 (EE1112 for Q2a).

10. Read Ls and Q from display and record in traveler.

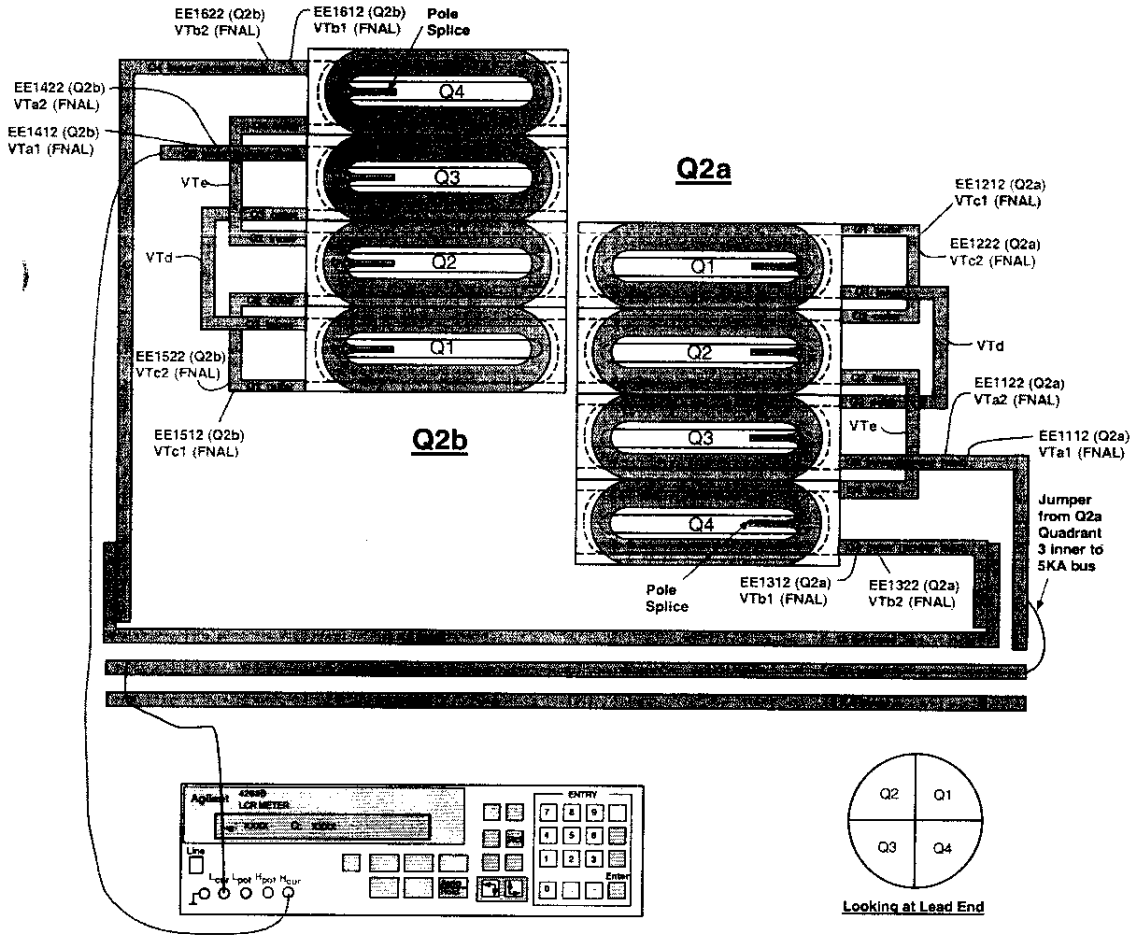

(Q2a) Inductance				Nominal ~ 3.34 to 3.48 mH
Voltage Tap Serial Numbers				Quadrant Total Inductance
Connect	Fermi	CERN	Quadrant	
H_{POT}	VTdQ2a	EMPTY	Quadrant 1	SWG ~~3.4~~ 3.4282 mH
L_{POT}	VTc1Q2a	EE1212		
H_{POT}	VTc1Q2a	EE1212	Quadrant 2	3.4317 mH
L_{POT}	VTeQ2a	EMPTY		
H_{POT}	VTdQ2a	EMPTY	Quadrant 3	3.3966 mH
L_{POT}	VTa1Q2a	EE1112		
H_{POT}	VTeQ2a	EMPTY	Quadrant 4	3.4254 mH
L_{POT}	VTb1Q2a	EE1312		

H_{POT}	VTa1Q2a	EE1112	Total Cold Mass	Nominal ~ 13.28 to 13.78 mH
L_{POT}	VTb1Q2a	EE1312		13.679 mH

(Q2a) Q-Factor				Nominal ~ 3.7 to 4.0
Voltage Tap Serial Numbers				Quadrant Total Q
Connect	Fermi	CERN	Quadrant	
H_{POT}	VTdQ2a	EMPTY	Quadrant 1	3.8
L_{POT}	VTc1Q2a	EE1212		
H_{POT}	VTc1Q2a	EE1212	Quadrant 2	3.8
L_{POT}	VTeQ2a	EMPTY		
H_{POT}	VTa1Q2a	EE1112	Quadrant 3	3.8
L_{POT}	VTdQ2a	EMPTY		
H_{POT}	VTeQ2a	EMPTY	Quadrant 4	3.8
L_{POT}	VTb1Q2a	EE1312		

H_{POT}	VTa1Q2a	EE1112	Total Cold Mass	Nominal ~ 3.7 to 4.0
L_{POT}	VTb1Q2a	EE1312		3.8

A Gouel
Technician(s)

3/14/05
Date

To measure the resistance of a bussed Q2:

1. Use Valhalla Scientific 4300B digital micro-ohmmeter.
2. Set Test Current to 1 amp.
3. Set Scale to 2V full scale.
4. Turn temperature compensation on.
5. Turn test current off.
6. Put jumper between Q2a Q3 inner power lead and 5 KA bus as shown in figure.
7. Connect I_{HI} to the 5KA bus (Q2a Q3 inner power lead) as shown in figure.
8. Connect I_{LO} to the Q2b Q3 inner power lead as shown in figure.
9. Turn test current on.
10. Connect V_{HI} and V_{LO} buttons to voltage taps as shown below.
11. Read resistance and record in traveler.

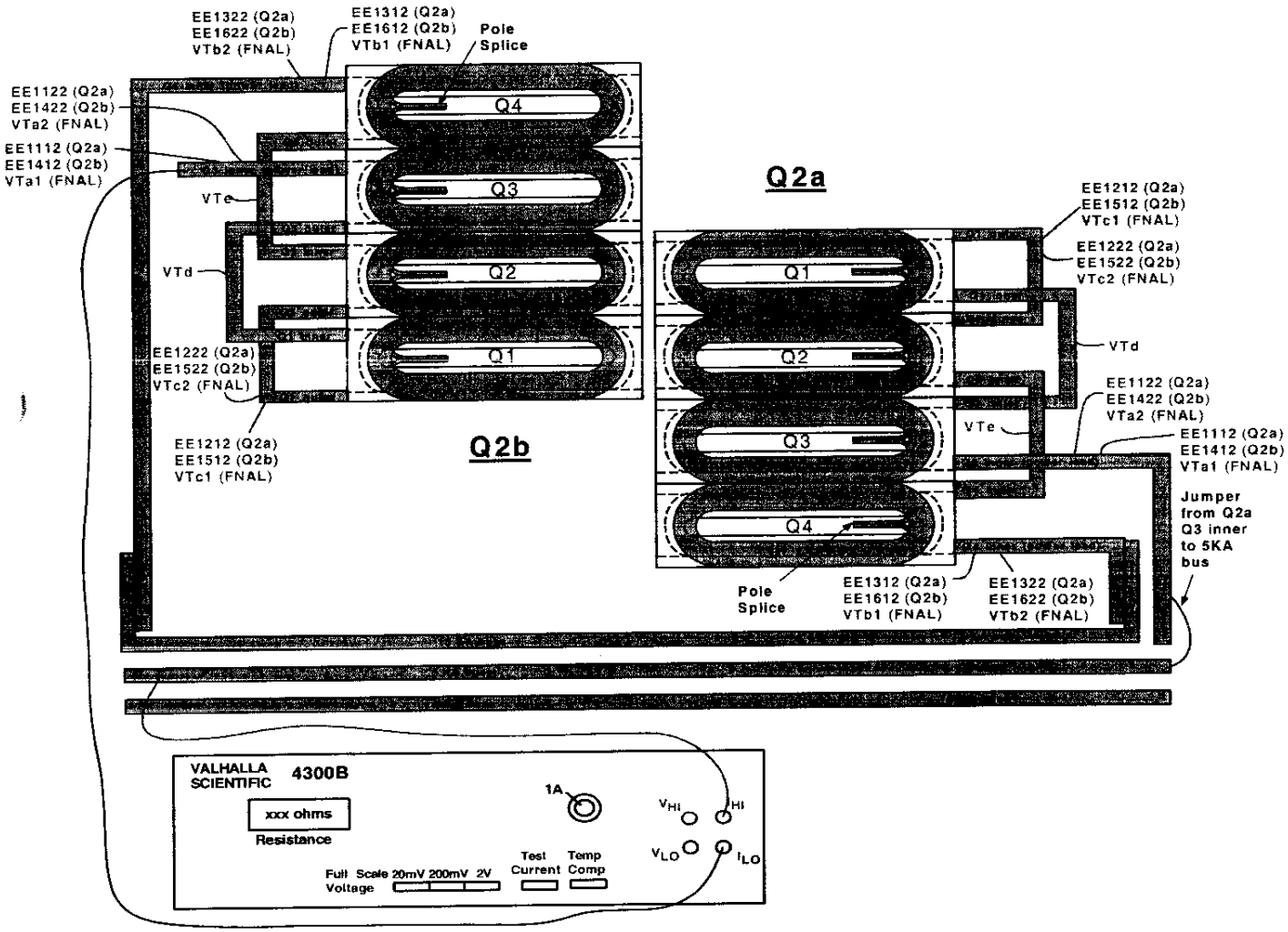

(Q2b) Resistance				Nominal ~ 560 to 585 mΩ
Voltage Tap Serial Numbers				Quadrant Total Resistance
Connect	Fermi	CERN	Quadrant	
V_{HI}	VTc1Q2b	EE1512	Quadrant 1	567 mΩ
V_{LO}	VTdQ2b	EMPTY		
V_{HI}	VTeQ2b	EMPTY	Quadrant 2	567.3 mΩ
V_{LO}	VTc1Q2b	EE1512		
V_{HI}	VTdQ2b	EMPTY	Quadrant 3	566.7 mΩ
V_{LO}	VTa1Q2b	EE1412		
V_{HI}	VTb1Q2b	EE1612	Quadrant 4	566.9 mΩ
V_{LO}	VTeQ2b	EMPTY		

Note: When Measuring Total Cold Mass, Set Test Current to 0.1 Amp				
V_{HI}	VTb1Q2b	EE1612	Total Cold Mass	Nominal ~ 2.305 Ω
V_{LO}	VTa1Q2b	EE1412		2.269 Ω

Technician(s) _____ Date 3/14/05

Check the resistance of the Redundant Voltage Taps.

Q2b Redundant Voltage Taps			
Connect	Fermi	CERN	Resistance
V_{HI}	VTc2Q2b	EE1522	1134 mΩ
V_{LO}	VTa2Q2b	EE1422	
V_{HI}	VTb2Q2b	EE1622	1135 mΩ
V_{LO}	VTc2Q2b	EE1522	

Technician(s) _____ Date 3/14/05

To measure Ls and Q of a Bussed Q2b:

1. Use Agilent 4263B LCR Meter.
2. Turn power on by pushing line button. Wait 30 seconds until display screen is lit.
3. Recall program #1. To do this, push recall (Rcl), then push #1, then push Enter.
4. Push Auto/Hold button to release hold.
5. Verify that the frequency displayed in the upper right corner of the display screen is 1000 Hz and the level recorded in the lower right corner of the display screen is 1V or 1000 mV.
6. Connect jumper between Q2a/Quadrant 3 inner power lead and 5KA bus as shown in figure.
7. Connect H_{cur} to 5KA bus as shown in figure.
8. Connect L_{cur} to Q2b/Quadrant 3 inner power lead as shown in figure.
9. Connect H_{pot} and L_{pot} buttons to voltage taps as shown below.

To measure Q2b:

- To measure Q1, connect H_{pot} to VTc1 (EE1512 for Q2b), and L_{pot} to VTd.
- To measure Q2, connect H_{pot} to VTe and L_{pot} to VTc1 (EE1512 for Q2b).
- To measure Q3, connect H_{pot} to VTd and L_{pot} to VTa1 (EE1412 for Q2b).
- To measure Q4, connect H_{pot} to VTb1 (EE1612 for Q2b) and L_{pot} to VTe.
- To measure total, connect H_{pot} to VTb1 (EE1612 for Q2b) and L_{pot} to VTa1 (EE1412 for Q2b).

10. Read Ls and Q from display and record in traveler.

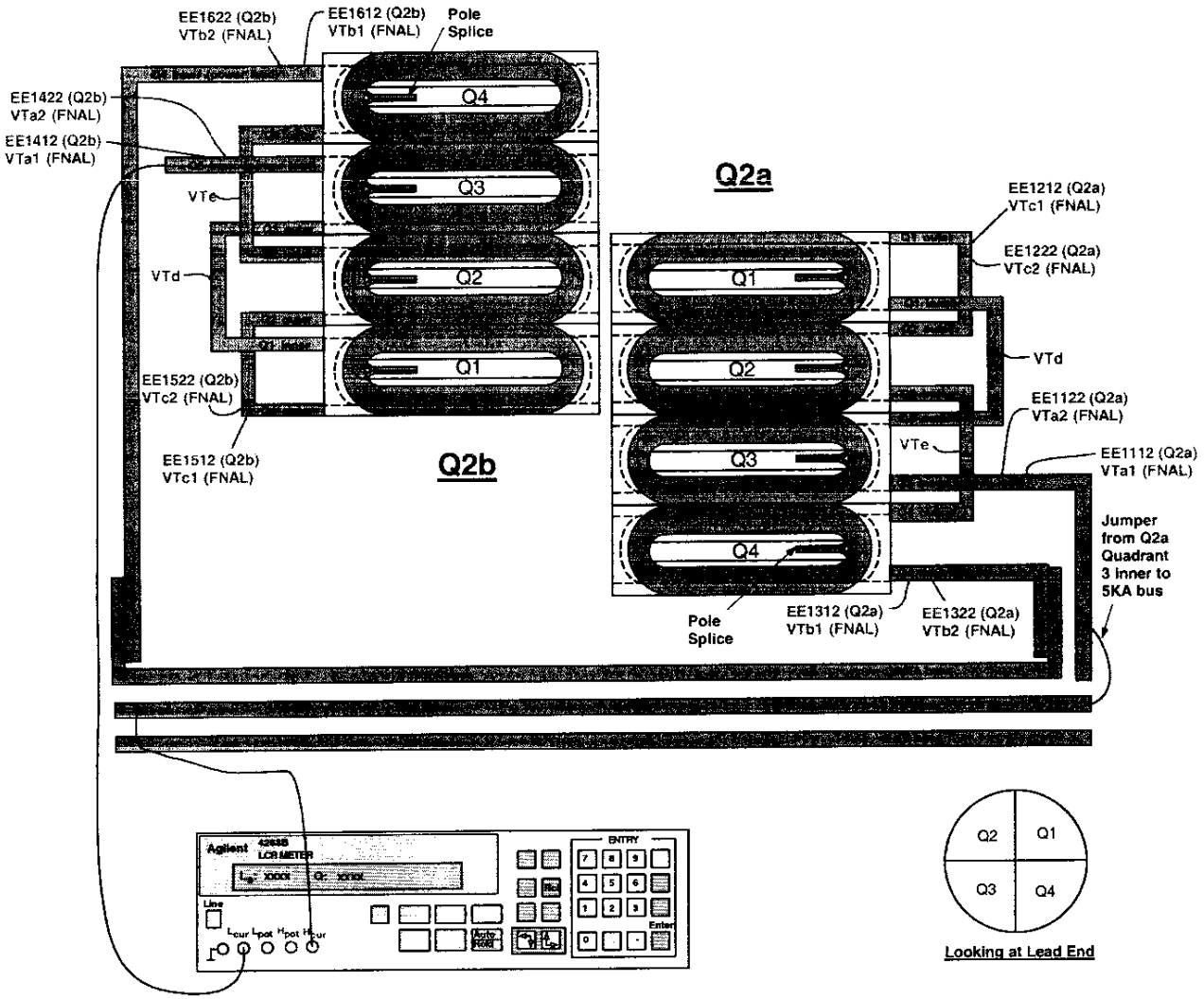

(Q2b) Inductance				Nominal ~ 3.34 to 3.48 mH
Voltage Tap Serial Numbers				Quadrant Total Inductance
Connect	Fermi	CERN	Quadrant	
H_{POT}	VTc1Q2b	EE1512	Quadrant 1	3.4436 mH
L_{POT}	VTdQ2b	EMPTY		
H_{POT}	VTeQ2b	EMPTY	Quadrant 2	3.4413 mH
L_{POT}	VTc1Q2b	EE1512		
H_{POT}	VTdQ2b	EMPTY	Quadrant 3	3.3942 mH
L_{POT}	VTa1Q2b	EE1412		
H_{POT}	VTb1Q2b	EE1612	Quadrant 4	3.4303 mH
L_{POT}	VTeQ2b	EMPTY		

H_{POT}	VTb1Q2b	EE1612	Total Cold Mass	Nominal ~ 13.28 to 13.78 mH
L_{POT}	VTa1Q2b	EE1412		13.706 mH

(Q2b) Q-Factor				Nominal ~ 3.7 to 4.0
Voltage Tap Serial Numbers				Quadrant Total Q
Connect	Fermi	CERN	Quadrant	
H_{POT}	VTc1Q2b	EE1512	Quadrant 1	3.8
L_{POT}	VTdQ2b	EMPTY		
H_{POT}	VTeQ2b	EMPTY	Quadrant 2	3.9
L_{POT}	VTc1Q2b	EE1512		
H_{POT}	VTdQ2b	EMPTY	Quadrant 3	3.9
L_{POT}	VTa1Q2b	EE1412		
H_{POT}	VTb1Q2b	EE1612	Quadrant 4	3.9
L_{POT}	VTeQ2b	EMPTY		

H_{POT}	VTb1Q2b	EE1612	Total Cold Mass	Nominal ~ 3.7 to 4.0
L_{POT}	VTa1Q2b	EE1412		3.9

Technician(s)

3/14/05
Date

To measure the resistance of a Thermometer (RTD):

1. Use Hewlett Packard HP3457A digital multimeter.
2. Record temperature of building within +/- 5 degrees.
3. Press line button to turn line on.
4. Connect wires as shown in Figure below.
   U+ (Black) to Sense HI
   I+ (Yellow) to Input HI
   U- (Red) to Sense LO
   I- (Green) to Input LO
5. Push blue button (function key) once.
6. Push OHMF button.
7. Verify arrow in readout is above the 4WΩ (meaning a 4 wire resistance measurement).
8. Read resistance in ohms and record in traveler.

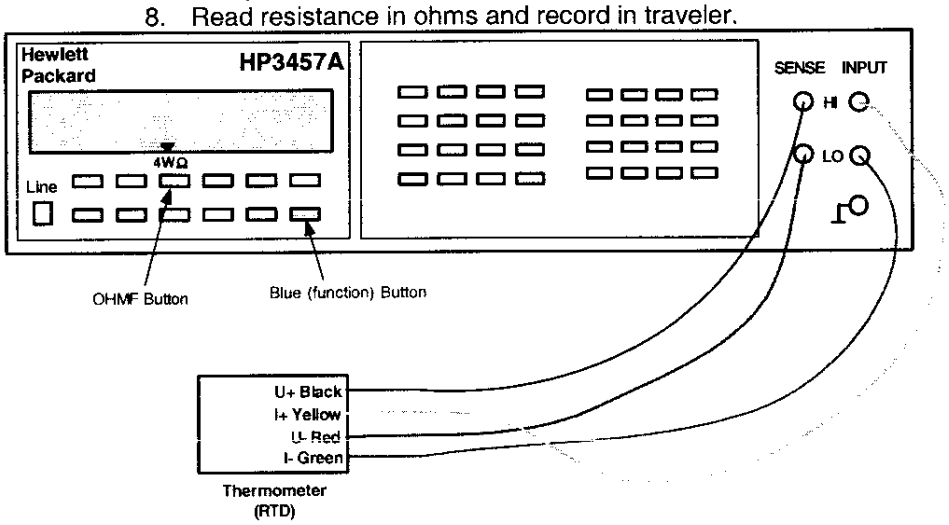

To measure the resistance of a Cryogenic (Warm-up) Heater

1. Use Hewlett Packard HP3457A digital multimeter.
2. Record temperature of building within +/- 5 degrees.
3. Press line button to turn line on.
4. Connect wires as shown in Figure below.
5. Push blue button (function key) once.
6. Push OHMF button.
7. Verify arrow in readout is above the 4WΩ (meaning a 4 wire resistance measurement).
   Note: Although this is technically a 4 wire measurement, it is effectively a 2 wire measurement, since there are only 2 wires connected to each heater.
8. Read resistance in ohms and record in traveler.

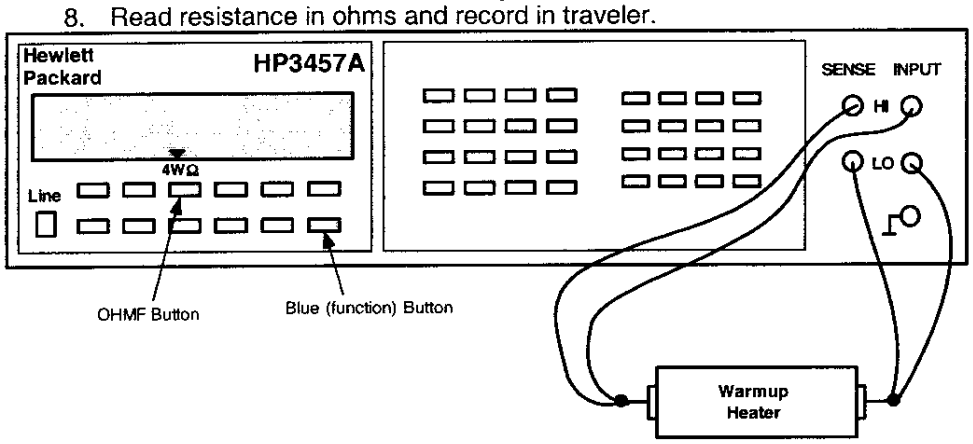

Q2a - RTD's and Cryogenic (warm-up) Heaters					
Temperature of Building (+/- 5°): 69°					
Component	**Fermi**	**CERN**	**Resistance**	**Range**	**Mfr. Resistance (Expedition)**
Q2a RTD, primary	TaQ2a	TT8312	64.470 Ω	60 to 70 Ω	61.983 Ω
Q2a RTD, redundant	TbQ2a	TT8322	67.482 Ω	60 to 70 Ω	65.219 Ω
Q2A Cryogenic (warm-up) Heater (LE) - wire toward cold mass end plate (CERN #1 I+)	W1aQ2A	EH8312+	18.1685 Ω		
Q2A Cryogenic (warm-up) Heater (LE) - wire toward cold mass mag center (CERN #1 I-)	W2aQ2A	EH8312-			
Q2A Cryogenic (warm-up) Heater (Non-LE) - wire toward cold mass end plate (CERN #2 I+)	W1bQ2A	EH8322+	17.8321 Ω		
Q2A Cryogenic (warm-up) Heater (Non-LE) - wire toward cold mass mag center (CERN #2 I-)	W2bQ2A	EH8322-			

A Gould
Technician(s)

3/14/05
Date

Q2b - RTD's and Cryogenic (warm-up) Heaters					
Temperature of Building (+/- 5°): 69°					
Component	**Fermi**	**CERN**	**Resistance**	**Range**	**Mfr. Resistance (Expedition)**
Q2b RTD, primary	TaQ2b	TT8332	69.737 Ω	60 to 70 Ω	67.253 Ω
Q2b RTD, redundant	TbQ2b	TT8342	67.782 Ω	60 to 70 Ω	65.413 Ω
Q2B Cryogenic (warm-up) Heater (LE) - wire toward cold mass end plate (CERN #1 I+)	W1aQ2B	EH8332+	17.4132 Ω		
Q2B Cryogenic (warm-up) Heater (LE) - wire toward cold mass mag center (CERN #1 I-)	W2aQ2B	EH8332-			
Q2B Cryogenic (warm-up) Heater (Non-LE) - wire toward cold mass end plate (CERN #2 I+)	W1bQ2B	EH8342+	17.7184 Ω		
Q2B Cryogenic (warm-up) Heater (Non-LE) - wire toward cold mass mag center (CERN #2 I-)	W2bQ2B	EH8342-			

A Gould
Technician(s)

3/14/05
Date

Using the Hewlett Packard HP3457A digital multimeter, measure the Strip Heater Resistance for Q2a and Q2b.

Q2a Strip Heater Resistance				
Fermi	CERN	Description	Limit	Resistance
H1aQ2a	YT1112+	Circuit A	18.20 to 21 Ω	19.8982 Ω
H2aQ2a	YT1112-			
H1bQ2a	YT1122+	Circuit B	18.20 to 21 Ω	19.8016 Ω
H2bQ2a	YT1122-			

Technician(s) _____ Date 3/14/05

Q2b Strip Heater Resistance				
Fermi	CERN	Description	Limit	Resistance
H1aQ2b	YT1132+	Circuit A	18.20 to 21 Ω	19.1646 Ω
H2aQ2b	YT1132-			
H1bQ2b	YT1142+	Circuit B	18.20 to 21 Ω	19.2418 Ω
H2bQ2b	YT1142-			

Technician(s) _____ Date 3/14/05

SEE ATTACHED SHEET! TRR# 1749

8.2 Using the HP3457A, connect power thru the connector Power Leads (HA2 and HB2 to measure Q2-H2 or VA2 and VB2 to measure Q2-V2). Connect the Sense Leads as shown in table below and record resistance.

Corrector Bus Leads

	V2A	V2B	H2A	H2B
	V1A	V1B	H1A	H1B

(View Looking into Q2b)

MCBX Corrector Coil Taps			
Component	**FermiLab Label**	**CERN Label**	**Resistance**
Q2-H2	VTH2	EE8122	
	HA2	N/A	Ω
Q2-V2	VTV2	EE8112	
	VA2	N/A	Ω

Technician(s) _____ Date _____

8.3 Check Q1 Instrumentation Bus Wires for Continuity.

Module	Pin	Fermi	CERN	KEK	Description	Done
M2	1	VTa1Q1	EE1111	a1	Q1 Lead Voltage Tap "a", primary	✓
M2	2	VTa2Q1	EE1121	a2	Q1 Lead Voltage Tap "a", redundant	✓
M2	3	VTc1Q1	EE1211	c1	Q1 Center Voltage Tap "c", primary	✓
M2	4	VTc2Q1	EE1221	c2	Q1 Center Voltage Tap "c", redundant	✓
M2	5	VTb1Q1	EE1311	b1	Q1 Lead Voltage Tap "b", primary	✓
M3	5	VTb2Q1	EE1321	b2	Q1 Lead Voltage Tap "b", redundant	✓
M5	1	VTH1	EE8121		Corrector voltage tap Q1-H1 (skew dipole) (on MCBX, MCBXH, A+ lead)	✓
M5	2	VTV1	EE8111		Corrector voltage tap Q1-V1 (normal dipole) (on MCBX, MCBXV A+ lead)	✓
M7	1	W1aQ1	EH8311+		Q1 Cryogenic Heater lead end - wire at top (CERN #1 I+)	✓
M7	2	W2aQ1	EH8311-		Q1 Cryogenic Heater lead end - wire at bottom (CERN #1 I-)	✓
M7	3	W1bQ1	EH8321+		Q1 Cryogenic Heater non-lead end - wire at top (CERN #2 I+)	✓
M7	4	W2bQ1	EH8321-		Q1 Cryogenic Heater non-lead end - wire at bottom (CERN #2 I-)	✓
M9	1	H1aQ1	YT1111+	HA1	Q1 Protection (Strip) Heater, ("a" circuit) (CERN lead #1+)	✓
M9	3	H2aQ1	YT1111-	HA2	Q1Protection (Strip) Heater, ("a" circuit) (CERN lead #1-)	✓
M9	5	H1bQ1	YT1121+	HB1	Q1 Protection (Strip) Heater, ("b" circuit) (CERN lead #2+)	✓
M10	4	H2bQ1	YT1121-	HB2	Q1 Protection (Strip) Heater, ("b" circuit) (CERN lead #2-)	✓
M12	1	TaQ1_I+	TT8311 I+		Q1 RTD, primary Wire color: Yellow	✓
M12	2	TaQ1_I-	TT8311 I-		Q1 RTD, primary Wire color: Green	✓
M12	3	TaQ1_V+	TT8311 U+		Q1 RTD, primary Wire color: Black	✓
M12	4	TaQ1_V-	TT8311 U-		Q1 RTD, primary Wire color: Red	✓
M12	5	TbQ1_I+	TT8321 I+		Q1 RTD, primary Wire color: Yellow	✓
M12	6	TbQ1_I-	TT8321 I-		Q1 RTD, primary Wire color: Green	✓
M12	11	TbQ1_V+	TT8321 U+		Q1 RTD, primary Wire color: Black	✓
M12	10	TbQ1_V-	TT8321 U-		Q1 RTD, primary Wire color: Red	✓

Technician(s) _____ Date 3/14/05

9.0 Final Preparations

9.1 Install Target Holders (Right, MD-390539), (Left, MD-390540) and (MD-390211) as per Q2 Cryostat General Assembly (ME-390127).

Technician(s) _____ Date 3-11-05

9.2 Install Reference Socket Cup (MA-390426) as per Q2 Cryostat General Assembly (ME-390127).

Technician(s) _____ Date 3-11-05

SS

9.3 Drill Holes for Spring Pins (MA-393360) in each of the three types of Target Holders (Right, MD-390539, Left, MD-390540, & MD-390211). Ensure that the holes are centered in a straight line as well as equidistant between the two corresponding bolt holes.

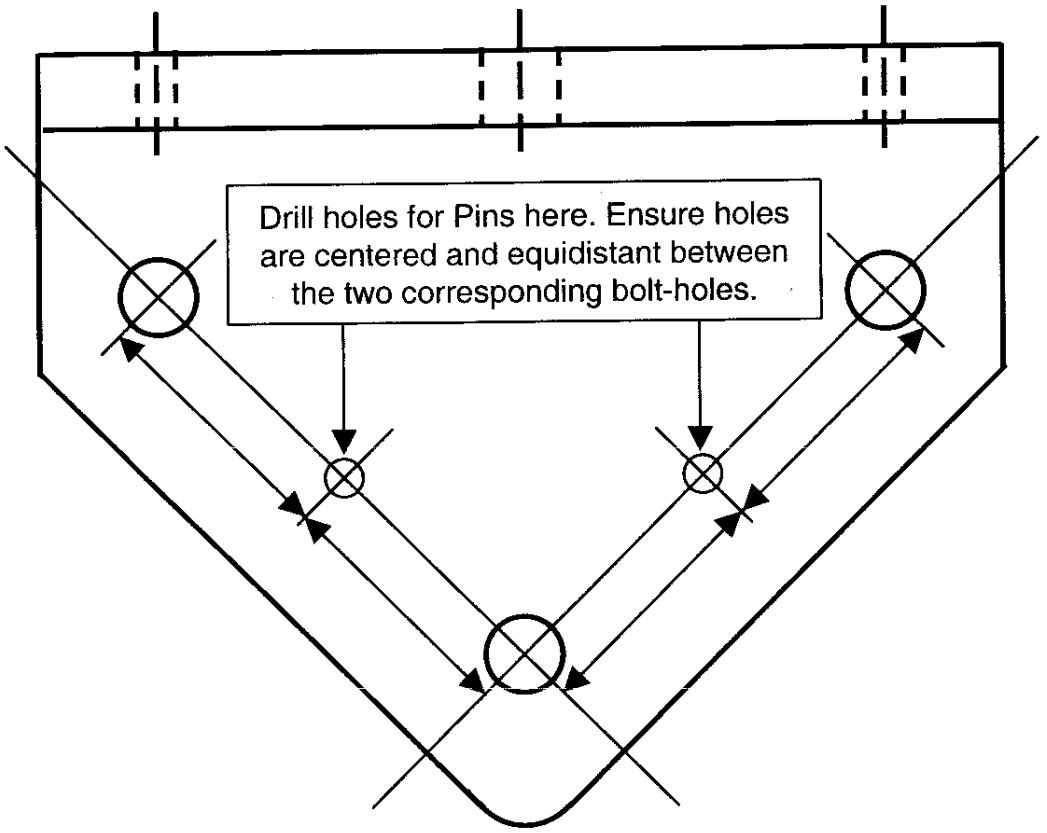

Target Holder

(Right and Left Target Holder will differ in appearance from the above, but holes will be made the same way.)

Technician(s) _____ Date 3-11-05

9.4 Install the Vinyl Flange Covers (MA-390491), (MA-390492), (MA-390493), (MA-390494), & the Alignment Fiducial Covers (MA-390495).

Technician(s) _____ Date 3-11-05

10.0 Production Complete

10.1 Process Engineering: verify that the LHC Cryostat Assembly Traveler (5520-TR-333644) is accurate and complete. This shall include a review of all steps to ensure that all operations have been completed and signed off. Ensure that all Discrepancy Reports, Nonconformance Reports, Repair/Rework Forms, Deviation Index and dispositions have been reviewed by the Responsible Authority for conformance before being approved.

Comments:

DR No. HGQ-0538 is now DR No. 4161

DR No. HGQ-0541 is now DR No. 4165

J. Szostak
Process Engineering/Designee

SEP 2 0 2005
Date

TD - Engineering Fabrication Component Kit List

ORIGINAL

Process Engineering

Component Serial No.: LQXB09
Kit submitted by: JOHN SZOSTAK | Ext. 2003
Fermi ID No.: 02943C
Date submitted: 22-Dec-04
Need date: 17-Jan-05
Deliver to: ICB
Use with Traveler No.: 333644
Job No.: 248
M&S task number: 300 | 1.1.1.3.4
Drawing Title: Q2 CRYOSTAT ASSEMBLY (GENERAL)
Drawing No.: ME-390206 | Rev. D

Material Control

Parts available

Verified by: M. Schmidt
Fermi ID No.: 04223N
Date submitted to stockroom: 1/7/2005

Parts issued

Issued by: [illegible]
Fermi ID No.: 12792
Date issued: 1-19-05
Parts received by E&F: J. Szostak
Fermi ID No.: 02943C
Date received by E&F: 1/19/05

	Description	Dwg Size	Number	Rev	Unit	Quantity Required	Location	Quantity Issued	E&F Verified	Routing Form Number	Spares Number / Comment
1	ADJUSTING SCREW	MB	390039	C	EA	12	IB4 bin	12	JA	81148	88 pcs.
2	VACUUM VESSEL ASSEMBLY #Q2-9	ME	390129	E	EA	1	CDF	1	JA	79432	3 pcs.
3	TARGET HOLDER	MD	390211	B	EA	6	R10,1,1	6	JA	74781	40 pcs.
4	BLANK, NON ROTATABLE CONFLAT FLANGE, 4.62" OD	MA	390374	*	EA	12	R8,3,4	12	JA	78987	108 pcs.
5	COPPER GASKET	MA	390375	*	EA	12	IB4 bin	12	JA	78429	119 pcs.
6	BOLT SET, HEX HEAD 5/16 - 24 x 1.25 LG.	MA	390376	*	EA	120	IB4 bin	120	JA	72306	1084 pcs.
7	WASHER, 0.656" ID x 1.38" OD x 0.13 THK., S.S.	MA	390377	*	EA	12	IB4 bin	12	JA	77866	110 pcs.
8	TAYLOR HOBSON SOCKET CUP	MA	390426	*	EA	12	R1,3,5	12	JA	77884	116 pcs.
9	75MM DIA. FLANGE COVER	MA	390491	*	EA	6	IB4 bin	6	JA	78835	201 pcs.
10	114MM DIA. FLANGE COVER	MA	390492	*	EA	4	IB4 bin	4	JA	78836	203 pcs.

ORIGINAL

TD - Engineering Fabrication Component Kit List

	Description	Dwg Size	Number	Rev	Unit	Quantity Required	Location	Quantity Issued	E&F Verified	Routing Form Number	Spares Number / Comment
11	134MM DIA. FLANGE COVER	MA	390493	*	EA	8	IB4 bin	8		78837	276 pcs.
12	201MM DIA. FLANGE COVER	MA	390494	*	EA	2	IB4 bin	2		78834	85 pcs.
13	ALIGNMENT FIDUCIAL COVER	MA	390495	*	EA	12	IB4 bin	12		78957	194 pcs.
14	TARGET HOLDER, RIGHT	MD	390539	*	EA	3	R8,S1,L3	3		79556	28 pcs.
15	TARGET HOLDER, LEFT	MD	390540	*	EA	3	R8,S1,L5	3		79555	28 pcs.
16	M16-2 x 70mm HEX SHSC, S.S.	MA	393021	*	EA	12	IB4 bin	12		V/A	145 pcs.
17	M6 FLAT WASHER 18-8 S.S.	MA	393024	*	EA	48	IB4 bin	48		78891	432 pcs.
18	SPRING PIN, 8 x 26	MA	393031	*	EA	12	IB4 bin	12		77819	114 pcs.
19	M10-1.5 x 25mm HEX SHSC, S.S.	MA	393036	*	EA	36	IB4 bin	36		77899	366 pcs.
20	M6-1.0 x 35mm HEX SHCS 18-8 S.S.	MA	393045	*	EA	24	IB4 bin	24		78886	232 pcs.
21	M8 x 30mm SPRING PIN 18-8 S.S.	MA	393048	*	EA	12	IB4 bin	12		78887	130 pcs.
22	M10 LOCK WASHER 18-8 S.S.	MA	393220	*	EA	36	IB4 bin	36		80024	488 pcs.
23	M4 SPRING PIN SLOTTED, PLAIN STEEL	MA	393360	*	EA	24	R2,2,3	24		81763	224 pcs.
Q2 INSULATED SHIELD & PIPING ASSEMBLY		ME	390207	*	EA	1					
24	Q2 SHIELD MLI INNER BLANKET	ME	390313	*	EA	X 1	P/N	1			1 pc.
25	Q2 SHIELD MLI OUTER BLANKET	ME	390314	*	EA	X 1	P/N	1			1 pc.
Q2 THERMAL SHIELD ASSEMBLY		ME	390161	C	EA	1					
26	SUPPORT BAND	ME	390083	A	EA	8	P/N	8		77146	56 pcs.

ORIGINAL

TD - Engineering Fabrication Component Kit List

	Description	Dwg Size	Number	Rev	Unit	Quantity Required	Location	Quantity Issued	E&F Verified	Routing Form Number	Spares Number / Comment
27	RETAINER	MA	390086	*	EA	16	IB4 bin	16	[illegible]	78914	242 pcs.
28	END SECTION	ME	390162	*	EA	4	P/N	4	[illegible]	77226	4 pcs.
29	MID SECTION	ME	390163	*	EA	4	P/N	4	[illegible]	77227	4 pcs.
30	CENTER SECTION	ME	390164	*	EA	2	P/N	2	[illegible]	77228	2 pcs.
31	COOLING TUBE WELDMENT	MD	390165	*	EA	2	P/N	2	[illegible]	N/A	2 pcs.
32	ALUMINUM SPACER	MA	390373	*	EA	64	IB4 bin	64	[illegible]	79001	513 pcs.
33	RETAINING WASHER	MA	390378	*	EA	394	IB4 bin	394	[illegible]	79002	3407 pcs.
34	THERMAL SHIELD BRACKET	MD	390783	*	EA	4	R7,1,4	4	[illegible]	81981	68 pcs.
35	M5 x 16mm BUTTON HEAD CAP SCREW	MA	393028	*	EA	394	IB4 bin	394	[illegible]	79003	3341 pcs.
	Q2 CRYOSTAT ASSEMBLY INTERNAL PIPING	ME	390208	E	EA	1					
36	HEAT EXCHANGER OUTER SHELL END FLANGE	MC	390031	B	EA	2	IB4 bin	2	[illegible]	77209	51 pcs.
37	PUMPING LINE END FLANGE	MC	390032	B	EA	2	IB4 bin	2	[illegible]	77210	56 pcs.
38	COOL DOWN LINE END FLANGE	MB	390033	B	EA	2	IB4 bin	2	[illegible]	77208	37 pcs.
39	RETAINING CLIP	MA	390103	*	EA	16	IB4 bin	16	[illegible]	76785	192 pcs.
40	HEAT EXCHANGER TO COLD MASS CONNECTOR	MC	390111	A	EA	1	R2,S1,L5	1	[illegible]	76268	1 pc.
41	TIE BAR RETAINING CLAMP	MB	390136	*	EA	8	IB4 bin	8	[illegible]	77132	53 pcs.
42	Q2 COOL DOWN LINE TUBE	MB	390146	A	EA	1	P/N	1	[illegible]	77651	1 pc.
43	Q2 PUMPING LINE TUBE	MB	390147	A	EA	1	P/N	1	[illegible]	77652	1 pc.

ORIGINAL

TD - Engineering Fabri ion Component Kit List

	Description	Dwg Size	Number	Rev	Unit	Quantity Required	Location	Quantity Issued	E&F Verified	Routing Form Number	Spares Number / Comment
44	PUMPING LINE PIPE STOP	MB	390149	*	EA	4	IB4 bin	4		77133	38 pcs.
45	COOL DOWN LINE PIPE STOP	MB	390150	*	EA	4	IB4 bin	4		81242	35 pcs.
46	Q2 4.5K INTERCEPT LINE TUBE	MB	390204	*	EA	3	P/N	3			10 pcs.
47	Q2 PIPE SUPPORT ASSEMBLY	MD	390258	A	EA	★4	P/N	4		76618	4 pcs.
48	INTERCEPT LINE PIPE STOP	MA	390379	A	EA	6	IB4 bin	6		78894	137 pcs.
49	PIPE SUPPORT BRACE	MB	390452	A	EA	4	R1,S3,L2	4		78913	8 pcs.
50	M6 x 45mm HEX SHCS, S.S.	MA	393017	*	EA	8	IB4 bin	8		77846	12 pcs.
51	M6 HEX NUT, S.S.	MA	393022	A	EA	8	IB4 bin	8		78236	14 pcs.
52	M6 FLAT WASHER, S.S.	MA	393024	*	EA	8	IB4 bin	8		78891	432 pcs.
53	M6 LOCK WASHER, S.S.	MA	393026	*	EA	8	IB4 bin	8		82451	300 pcs.
	Q2 HEAT EXCHANGER ASSEMBLY	ME	390142	*	EA	1					
54	Q2 OUTER SHELL TUBE	MD	390145	B	EA	1	P/N	1		77992	2 pcs.
	CORRUGATED TUBE ASSEMBLY	ME	390143	A	EA	1					
55	CORRUGATED TUBE SUPPORT	MB	390028	*	EA	8	R9,S1,L4	8		78144	41 pcs.
56	CORRUGATED TUBE RESTRICTOR	MB	390029	A	EA	2	R9,S1,L4	2		77724	48 pcs.
57	CORRUGATED TUBE WELDMENT	ME	390394	*	EA	1	P/N	1		78456 ~~77992~~	1 pc.
	Q2 PIPING INSULATION	ME	390306	A	EA	1					
58	COLD MASS MLI CENTER BLANKET	ME	390305	*	EA	1	P/N	1			1 pc.

ORIGINAL

TD - Engineering Fabri ion Component Kit List

	Description	Dwg Size	Number	Rev	Unit	Quantity Required	Location	Quantity Issued	E&F Verified	Routing Form Number	Spares Number / Comment
59	PIPING MLI END BLANKET	ME	390307	*	EA	2	P/N	2			2 pcs.
60	PIPING MLI MID BLANKET	ME	390308	*	EA	2	P/N	2			2 pcs.
	Q2 SUSPENSION SYSTEM INSTALLATION ASSEMBLY	ME	390310	*	EA	1					
61	TIE BAR SHIM, 6.4mm	MB	390118	*	EA	6	IB4 bin	6		77204	9 pcs.
62	TIE BAR SHIM, 2.4mm	MB	390119	*	EA	6	IB4 bin	6		77203	8 pcs.
63	TIE BAR SHIM, 0.6mm	MB	390120	*	EA	6	IB4 bin	6		77202	6 pcs.
64	Q2 TIE BAR ASSEMBLY	MC	390167	*	EA	4	P/N	4		78085	4 pcs.
65	OUTBOARD SUSPENSION MOUNTING BRACKET	MD	390280	*	EA	4	R9,S1,L2	4		77277	8 pcs.
66	MIDDLE SUSPENSION MTG BRACKET	MD	390281	*	EA	2	IB4 bin	2		77106	4 pcs.
67	Q2 COLD MASS WELDED ASSEMBLY	ME	390309	B	EA	1	ICB has				
68	M8 x 50mm SHCS, S.S.	MA	393020	*	EA	18	IB4 bin	18		82378	182 pcs.
69	M8 HEX NUT, S.S.	MA	393023	*	EA	18	IB4 bin	18		76746	94 pcs.
70	M8 FLAT WASHER, S.S.	MA	393025	*	EA	18	IB4 bin	18		76745	836 pcs.
71	M8 LOCK WASHER, S.S.	MA	393027	*	EA	18	IB4 bin	18		76744	855 pcs.
	FIXED SUPPORT ASSEMBLY	ME	390041	D	EA	1					
72	RING ASSEMBLY	ME	390043	B	EA	1	NT02408	1		76906	22 pcs.
73	SUPPORT PIN	MB	390047	B	EA	2	R8,S2,L1	2		76914	58 pcs.
74	1.0 mm THK SHIM	MA	390275	A	EA	8	IB4 bin	5		76911	13 pcs.

ORIGINAL

TD - Engineering Fabri ion Component Kit List

	Description	Dwg Size	Number	Rev	Unit	Quantity Required	Location	Quantity Issued	E&F Verified	Routing Form Number	Spares Number / Comment
75	0.5 mm THK SHIM	MA	390276	*	EA	8	ICB has				
76	M16 x 40.0 mm LG SHOULDER SCREW, 18-8 S.S.	MA	390277	*	EA	8	IB4 bin	8		76913	224 pcs.
77	TWO-PIECE CLAMP-ON COLLAR	MA	390321	A	EA	4	IB4 bin	4		76912	52 pcs.
78	0.13 mm THK SHIM	MA	390480	*	EA	8	R2,S2,L4	8		79121	217 pcs.
79	0.25 mm THK SHIM	MA	390481	*	EA	12	R2,S2,L4	12		79122	333 pcs.
	SLIDING SUPPORT ASSEMBLY	ME	390042	C	EA	2					
80	RING ASSEMBLY	ME	390043	B	EA	2	NT02408	2		76906	22 pcs.
81	SUPPORT PIN	MB	390047	B	EA	4	R8,S2,L1	4		76914	58 pcs.
82	1.0 mm THK SHIM	MA	390275	A	EA	16	IB4 bin	16		76911	13 pcs.
83	0.5 mm THK SHIM	MA	390276	*	EA	16	ICB has				
84	M16 x 40.0 mm LG SHOULDER SCREW, 18-8 S.S.	MA	390277	*	EA	16	IB4 bin	16		76913	224 pcs.
85	0.13 mm THK SHIM	MA	390480	*	EA	16	R2,S2,L4	16		79121	217 pcs.
86	0.25 mm THK SHIM	MA	390481	*	EA	24	R2,S2,L4	24		79122	333 pcs.
	Q2 INSULATION INSTALLATION ASSEMBLY	ME	390302	A	EA	1					
87	MLI END BLANKET	ME	390303	*	EA	2	P/N	2		N/A	2 pcs.
88	MLI MID BLANKET	ME	390304	*	EA	2	P/N	2		N/A	2 pcs.
89	MOUNTING LUG BLANKET	MC	390496	*	EA	8	Site 38	8		N/A	183 pcs.
	Q2 INSTALLATION TIE-ROD ASSEMBLY	MC	390637	*	EA	4					

ORIGINAL

TD - Engineering Fabrication Component Kit List

	Description	Dwg Size	Number	Rev	Unit	Quantity Required	Location	Quantity Issued	E&F Verified	Routing Form Number	Spares Number / Comment
90	SHORT END THREAD ROD	MA	390635	*	EA	4	R2,2,2	4	RA	80097	6 pcs.
91	JAM NUT (LH)	MA	393046	*	EA	8	IB4 bin	8	RA	80074	62 pcs.
92	JAM NUT (RH)	MA	393225	*	EA	16	IB4 bin	16	RA	80073	156 pcs.
93	COUPLING NUT (RH / LH)	MA	393226	*	EA	8	IB4 bin	8	RA	80075	56 pcs.
94	THREAD ROD (RH) 6 FT. LONG	MA	393227	*	EA	4	R7,2,4	4	RA	80061	28 pcs.
95	THREAD ROD (LH) 3 FT. LONG	MA	393228	*	EA	4	R1,2,3	4	RA	80072	26 pcs.

ADDITIONAL PARTS REQUEST

ADDITIONAL PARTS REQUEST FORM SHALL BE USED TO ACCESS ALL ITEMS FROM INVENTORY WITH THE EXCEPTION OF PARTS KITS.

THIS FORM MUST BE SIGNED BY AN ACQUISITIONER BEFORE BRINGING TO THE STOCKROOM

MAGNET OR COIL # *LQXB09*

REQUESTED BY *Steve Gould*

DATE REQUESTED *2/18/05*

DELIVER TO *ICB*

BUDGET CODE *300/1.1.1.3.3(LCI)*

NEED BY DATE *2/18/05*

JOB TICKET # _____

MMR # _____

MACHINE SHOP REQ. # _____

PO # _____

PURCHASE RELEASE # _____

OTHER _____

PARTS STATUS (CHECK ONE)

☐ DEFECTIVE PARTS ISSUED ☐ PARTS SCRAPPED ☐ A/R ITEMS

☐ DEFECTIVE ASSEMBLY ☒ MISSING FROM KIT ALREADY ISSUED

☒ INDIVIDUAL PARTS ☐ CONSUMABLES ☐ PARTS LOST

ACQUISITIONER SIGNATURE [signature] **ID#** 4223 **DATE** 2/18/05

PLEASE INDICATE REVISION REQUIRED

LOCATION	PART #	REV	QTY	UOM	DESCRIPTION	RF #	SIR #
W/ STOCK 148	*IB#4-BIN*	*390103*		*1*	*Each*	*Retaining Clip*	76785

STOCKROOM SIGNATURE [signature] **ID#** 1268 **DATE** 2/18/05

PARTS DELETED FROM DATABASE _____ **ID#** _____ **DATE** _____

A COPY OF THIS FORM IS TO BE INCLUDED IN WITH THE TRAVELER

PARTS RECEIVED BY [signature] **ID#** 4965 **DATE** 2/18/05

Step 8.2 Modified Table

Corrector Assembly	Corrector Element	Readout	Labels	Power Labels	Resistance
MCBX	MCBXV	V2A	EE8112	V2A, V2B	.001
		EE8112	V2B		17.4375
		V2A	V2B		17.4471
	MCBXH	H2A	EE8122	H2A, H2B	.03
		EE8122	H2B		21.3248
		H2A	H2B		21.3664

TRR# 1749

D Gould 3/14/05

Revision Request Control Number: 1709

Specification Number: 5520 - TR - 333644 Current Revision: E

Traveler or Document Title Q2 LQXB Cryostat Final Assembly Traveler

Step #/Description of Revision:

1.6 Added Step. "Protect the bellows during all stages of production." DR No. HGQ-0500.
3.4 Modified Step. Changed to "Attach Leak Check sticker for the Vacuum Vessel Assembly (ME-390003) per ES-107240." Per LQXB08.
4.15 Added Step. "If needed, perform a stretched wire measurement of the system, noting the relative position and roll of the three magnetic elements to each other. Perform Stretched Wire Measurement?" per LQXB08.
5.6 Added Step. "Starting from the North Side of IP (or East) End of Magnet, mark the East End of the 1st blanket "1E" (1 East) and "1W" (1 West) as per Figure 5.6-A below. Label the next blanket in this fashion, incrementing the numerical value for each blanket as per Figure 5.6-A. When all blankets are installed on Cold Mass, blanket designations should be placed near the "Top" of the North side of the magnet as per Figure 5.6-A." Per production request.
5.7 Modified Step. Removed "Label blankets as they are removed for later positioning." Per new Step 5.6.
5.22 Modified Step. Moved Step to before Step 5.21 (Pressure testing the Cold Mass) per LQXB08.
5.23 Modified Step. Moved Step to before Step 5.21 (Pressure testing the Cold Mass) per LQXB08.
5.24 Modified Step. Moved Step to before Step 5.21 (Pressure testing the Cold Mass) per LQXB08.
5.25 Added Step. "Install the Fiducial Mounting Blocks (MB-390809) per Q2 Cold Mass Welded Assembly (ME-390309)." per LHC Production Engineer.
5.26 Added Step. "Weld the Fiducial Mounting Blocks (MB-390809) per Q2 Cold Mass Welded Assembly (ME-390309)." per LHC Production Engineer.
5.27 Added Step. "Prepare Cold Mass Assembly for Pressure Test at 375 psi." per LHC Production Engineer.
5.28 Added Step. "Verify Cold Mass Assembly is ready for Pressure Test at 375 psi." per LHC Production Engineer.
5.30 Modified Step. Moved to before Assembling the Corrugated Tube Assembly. Per LQXB08. (New Step 7.7).
8.1 Modified Step. Reversed Hpot and Lpot Voltage Taps for Inductance and Q-factor, in table, to allow for correct values taken at Q2a end of Magnet. Per LQXB08.
9.4 Removed Step. "Install the Vinyl Flange Covers (MA-390491),(MA-390492), (MA-390493), (MA-390494), & the Alignment Fiducial Covers (MA-390495)." Moved to Shipping Traveler.

John Szostak	Jim Rife	1/20/2005
Originator	Responsible Authority	Date
Revision Incorporated into the Traveler:	John Szostak	2/28/2005
	Revision Incorporated By	Date
Process Engineering Final Review:	Jamie Blowers	2/28/2005
	Process Engineering/Designee	Date

Instructions for the completion of the Revision Request Form

Note(s):

Multiple steps may be effected by one Revision Request Form but only one specific Traveler or Document may be effected by each Revision Request Form.

If completing this form by hand, a Revision Request Control Number must be obtained before processing.

If completing this form entirely by electronic means, the printed copy to be filed in the Process Engineering Office is to be initialed by the individual incorporating the Revision Request and the individual who reviewed the Traveler or Document.

Originator Instructions:

1) Specification Number: - Enter the Specification Number of the Traveler or Document to be revised. (Document title is inserted automatically from the spec. #)

2) Current Revision: - Enter the Revision of the Traveler or Document to be revised.

3) Step# / Description of the Revision: - Enter a description of the revision to be made and the step# it applies to, if applicable. If needed to describe the revision attach a copy of the page(s). If the revision is coming from a related document such as a Discrepancy Report or an Engineering Order attach a copy of that document to the Revision Request Form.

4) Originator: - Originator is the person generating the form. (Select Name from List)

5) Responsible Authority: - Responsible Authority is person responsible for the process in question. (Select Name from List)

Process Engineering Office Instructions:

1) Revision Incorporated into the Traveler: - Signature of the individual who incorporated the revision.

2) Process Engineering Final Review: - Review the Traveler or Document revised, sign and date the form. The original completed Revision Request Form will be retained by the Process Engineering Office in the Revision Request Binder.

Revision Request Control Number: 1723

Specification Number: 5520 - TR - 333644 Current Revision: F

Traveler or Document Title Q2 LQXB Cryostat Final Assembly Traveler

Step #/Description of Revision:

5.9 Modified Step. Changed to "Install Q2 Installation Tie Rod Assembly (MC-390635) as per Q2 Cryostat Assembly - Internal Piping (ME-390208)." Per DR No HGQ-0483.
5.21 Removed Step. Moved to New Step 5.10 "Install the Tie Bar Retaining Clamps (Qty. 8)(MB-390136) per Q2 Internal Piping Assembly (ME-390208)." Per DR No HGQ-0483.
5.32 Modified Step. Changed to "Leak check the three Q2 4.5k Intercept Lines (MB-390204)." Added Individual drawings showing locations of each 4.5k Intercept Line.
8.1 Modified Step. Modified Electrical Table. Removed "Voltage Tap Serial Numbers".
9.1 Modified Step. Changed Drawing No. from ME-390127 to ME-390206.
9.2 Modified Step. Changed Drawing No. from ME-390127 to ME-390206.
9.5 Added Step. "Ensure all Pipe Supports are in place." Per LHC Project Engineer Cryostat.
9.6 Added Step. "Perform a Final Stretched Wire measurement." Per TR-333755 - LQXA04.
9.7 Added Step. "Perform a Final Cryostat Pipe Survey measurement." Per TR-333755 - LQXA04.

John Szostak	Jim Rife	4/7/2005
Originator	Responsible Authority	Date
Revision Incorporated into the Traveler:	John Szostak	5/25/2005
	Revision Incorporated By	Date
Process Engineering Final Review:	Jamie Blowers	5/25/2005
	Process Engineering/Designee	Date

Instructions for the completion of the Revision Request Form

Note(s):

Multiple steps may be effected by one Revision Request Form but only one specific Traveler or Document may be effected by each Revision Request Form.

If completing this form by hand, a Revision Request Control Number must be obtained before processing.

If completing this form entirely by electronic means, the printed copy to be filed in the Process Engineering Office is to be initialed by the individual incorporating the Revision Request and the individual who reviewed the Traveler or Document.

Originator Instructions:

1) Specification Number: - Enter the Specification Number of the Traveler or Document to be revised. (Document title is inserted automatically from the spec. #)

2) Current Revision: - Enter the Revision of the Traveler or Document to be revised.

3) Step# / Description of the Revision: - Enter a description of the revision to be made and the step# it applies to, if applicable. If needed to describe the revision attach a copy of the page(s). If the revision is coming from a related document such as a Discrepancy Report or an Engineering Order attach a copy of that document to the Revision Request Form.

4) Originator: - Originator is the person generating the form. (Select Name from List)

5) Responsible Authority: - Responsible Authority is person responsible for the process in question. (Select Name from List)

Process Engineering Office Instructions:

1) Revision Incorporated into the Traveler: - Signature of the individual who incorporated the revision.

2) Process Engineering Final Review: - Review the Traveler or Document revised, sign and date the form. The original completed Revision Request Form will be retained by the Process Engineering Office in the Revision Request Binder.

Revision Request Control Number: 1749

Specification Number: 5520 - TR - 333644 Current Revision: G

Traveler or Document Title Q2 LQXB Cryostat Final Assembly Traveler

Step #/Description of Revision:

4.3 Modified Step. Changed to "Install the "Top" Suspension System Adjusting Screws (MB-390039) and the "Bottom" (C936 Bearing Bronze) Suspension System Adjusting Screws (MB-390878), M16 Screw and washer into the Vacuum Vessel to hold the Fixed Support Assembly in place. Coat all screw threads with Molybdenum disulfide prior to installation." Per DR No. 4214.

4.17 Modified Step. Changed to "Establish alignment between the Cold Mass and the Support system per Q2 Cryostat Assembly Internal Piping (ME-390208)." per LQXB09.

7.11 Modified Step. Changed to "At the Q2a end, measure and mark 1m 411.8 mm [55.58 in.] of the lead as per Q2 Module Assembly Q2a Lead End (ME-369895, sheet 3 of 4). Have Crew Chief verify the length and sign below." Per DR No. 4165

7.12 Added Step. "At the Q2a end, measure 1m 411.8 mm [55.58 in.] and cut the lead at the mark as per Q2 Module Assembly Q2a Lead End (ME-369895, sheet 3 of 4). Have a Weldor fuse the ends of the Superconducting Cable before shipping Magnet." Per DR No. 4165

7.13 Modified Step. Changed to "At the Q2b end, measure and mark 511.8 mm [20.15 in.] of the lead as per Q2 Module Assembly Q2b Lead End Details (ME-369895, sheet 2 of 4). Have Crew Chief verify the length and sign below." Per DR No. 4165

7.14 Added Step. "At the Q2b end, measure 511.8 mm [20.15 in.] and cut the lead at the mark as per Q2 Module Assembly Q2b Lead End Details (ME-369895, sheet 2 of 4). Have a Weldor fuse the ends of the Superconducting Cable before shipping Magnet." Per DR No. 4165

8.2 Modified Step. Changed Table per LQXB09.

John Szostak	Jim Rife	6/14/2005
Originator	Responsible Authority	Date
Revision Incorporated into the Traveler:		
	Revision Incorporated By	Date
Process Engineering Final Review:		
	Process Engineering/Designee	Date

Instructions for the completion of the Revision Request Form

Note(s):

Multiple steps may be effected by one Revision Request Form but only one specific Traveler or Document may be effected by each Revision Request Form.

If completing this form by hand, a Revision Request Control Number must be obtained before processing.

If completing this form entirely by electronic means, the printed copy to be filed in the Process Engineering Office is to be initialed by the individual incorporating the Revision Request and the individual who reviewed the Traveler or Document.

Originator Instructions:

1) Specification Number: - Enter the Specification Number of the Traveler or Document to be revised. (Document title is inserted automatically from the spec. #)

2) Current Revision: - Enter the Revision of the Traveler or Document to be revised.

3) Step# / Description of the Revision: - Enter a description of the revision to be made and the step# it applies to, if applicable. If needed to describe the revision attach a copy of the page(s). If the revision is coming from a related document such as a Discrepancy Report or an Engineering Order attach a copy of that document to the Revision Request Form.

4) Originator: - Originator is the person generating the form. (Select Name from List)

5) Responsible Authority: - Responsible Authority is person responsible for the process in question. (Select Name from List)

Process Engineering Office Instructions:

1) Revision Incorporated into the Traveler: - Signature of the individual who incorporated the revision.

2) Process Engineering Final Review: - Review the Traveler or Document revised, sign and date the form. The original completed Revision Request Form will be retained by the Process Engineering Office in the Revision Request Binder.

Traveler Title:	Specification No:	Revision:	DR No:
Q2 LQXB Cryostat Final Assembly Traveler	333644	E	4161

Step No:	Drawing No:	Routing Form No:	Serial No:	Rework ID:
7.9	ME-390206		LQXB09	0

Discrepancy Description:

During the adjustments of the cold mass using the system adjusting screws, one of the screw seized up. Looking at the Non-IP End of the assembly it is the bottom right screw. Currently the cold mass has been rolled out of the vacuum vessel ~6' to enable access to the inside of the assembly.

Originator: Jim Rife

Date: 3/3/2005

Cause of Nonconformance:

The adjusting screw seized up.

Responsible Authority: Thomas Page

Date: 3/3/2005

Disposition:

First try to remove the screw without cutting. If this does not work, cut the screw out of the vacuum vessel. Ensure the threads on the vacuum vessel are not damaged during this procedure.

Responsible Authority: Thomas Page

Date: 3/3/2005

Corrective Action to Prevent Recurrence:

None at this time.

Responsible Authority: Thomas Page

Date: 3/3/2005

Corrective Action/Disposition Verified By: John Szostak

Date: 5/13/2005

Will Configuration be affected?: ☐ YES ☑ NO

Identified problem area:

☐ Material ☐ Manpower ☑ Method ☐ Machine ☐ Measurement

Reviewed By: Bob Jensen

Date: 6/2/2005

Traveler Title:	Specification No:	Revision:	DR No:
Q2 LQXB Cryostat Final Assembly Traveler	333644	E	4165

Step No:	Drawing No:	Routing Form No:	Serial No:	Rework ID:
7.11	369895		LQXB09	0

Discrepancy Description:

The top corrector lead coming out of the magnet is too short according to print #369895.

Originator: Steve Gould

Date: 3/14/2005

Cause of Nonconformance:

Corrector Lead was cut slightly shorter than drawing (ME-369895).

Responsible Authority: Rodger Bossert

Date: 8/9/2005 10:55:59 AM

Disposition:

Although slightly shorter than the drawing, it is still long enough to make the splice. Make splice at installation. Proceed with assembly.

Responsible Authority: Rodger Bossert

Date: 8/9/2005

Corrective Action to Prevent Recurrence:

None at this time. Add step to traveler to verify length of Corrector Lead, with Crew Chief signoff, for both ends of the magnet. Disposition verify notes: (TRR No. 1749)

Responsible Authority: Rodger Bossert

Date: 8/9/2005

Corrective Action/Disposition Verified By: John Szostak

Date: 8/9/2005 11:01:28 AM

Will Configuration be affected?: ☐ YES ☑ NO

Identified problem area:

☐ Material ☐ Manpower ☑ Method ☐ Machine ☐ Measurement

Reviewed By: Bob Jensen

Date: 8/9/2005