Document ID:

8147

LHC Q2 LQXB Cryostat Shipping Traveler

333732 / Rev. B

Job No:	**248**
E + F Project/Task No.:	**300/1.1.1.6.2**
M + S Project/Task No.:	**300/1.1.1.6.2**

Place This Side Down For Scanning!!!

Magnet Travelers

LQXB09-0

Document ID:

8147

Job No.:

248

Project/Task No.

300/1.1.1.6.2

Series:

LQXB

Serial No:

LQXB09

Rework ID:

0

Specification No.:

333732

Revision:

B

LQXB09-0

Fermi National Accelerator Laboratory
Batavia, IL 60510

LARGE HADRON COLLIDER
Q2 - LQXB
SHIPPING TRAVELER

Reference Drawing(s):
Q2 Shipping Fixture Final Assembly
(ME-390686)
Q2 Magnet Shipping Assembly
(ME-390710)

Project/Task Number: *300/1.1.1.6.2*
Released By: *John Szostak* **Magnet/Device Series:** *LQXB*
Date Issued: *9/19/2005 11:08:11 AM* **Scanned Pages:** 42
Prepared by: B. Jensen, J. Szostak

Title	Signature	Date
TD / E&F Process Engineering	*Thomas Gardner* Bob Jensen / Designee	3/24/05
TD / LHC Production Supervisor	*Steve Gould* Jim Rife / Designee	3/24/05
TD / LHC Production Engineer	*Tom Page* Tom Page / Designee	3/29/05
TD / LHC Project Engineer Cryostat	*Tom Nicol* Tom Nicol / Designee	3/29/05
TD / LHC Project Physicist	*Mike Lamm* Michael Lamm / Designee	3/24/05
TD / LHC Program Manager	*Jim Kerby* Jim Kerby / Designee	3/24/05

Revision Page

Revision	Step No.	Revision Description	TRR No.	Date
None	N/A	Initial Release	N/A	6/28/04
A	3.8	Added Quadrant #3 Lead above 13 Ka lead	1650	7/12/04
	4.1	Remove 13 Ka lead and added Quadrant #3 lead		
	6.0	Split step. One for Q2A and one for Q2B Ls & Q readings. Updated Table 6.0.1, 6.0.2, 6.0.3, 6.0.4 VPot to LPot & HPot. Updated diagram/test procedure from HP to Agilent Meter		
	7.0	Updated diagram/test procedure from HP to Agilent Meter Updated Nominal values in Table 7.0.5, 7.0.6, 7.0.7, & 7.0.8		
	12.5	Deleted Step		
	12.6	Deleted Step		
	12.7	Updated Step to install Bellows Protectors instead of Velco		
	12.8	Updated Step to include Kapton MA-106723 ½ lapped on leads		
B	1.6	Added Step. "Protect the bellows during all stages of production." **DR No. HGQ-0500.**	1708	3/24/05
	3.0 – 15.0	Modified Steps. Arranged and modified steps per production.		
	10.7	Modified Step. Changed to "Install the Vinyl Flange Covers (MA-390491), (MA-390492), (MA-390493), (MA-390494), & the Alignment Fiducial Covers (MA-390495)."		
	12.11	Modified Step. Changed to "Are Accelerometers (Shock Recorders) available for installation? ❒Yes - Install Accelerometers as per Responsible Authority and Figure 8.10-A. below. ❒No - Accelerometers are NOT available for installation." **DR No. HGQ-0512.**		

Ensure appropriate memos and specific instructions are placed with the traveler before issuing the sub traveler binder to production.

1.0 General Notes

1.1 All steps that require a sign-off shall include the Technician/Technician(s)s first initial and full last name.

1.2 No erasures or white out will be permitted to any documentation. All incorrectly entered data shall be corrected by placing a single line through the error, initial and date the error before adding the correct data.

1.3 All Discrepancy Reports and Traveler Revision Requests issued shall be recorded in the left margin next to the applicable step.

1.4 Personnel shall perform all tasks in accordance with current applicable ES&H guidelines and those specified within the step.

1.5 Cover the product/assembly with Green Herculite (Fermi stock 1740-0100) when not being serviced or assembled.

1.6 Protect the Bellows during all stages of production.

2.0 Parts Kit List

2.1 Attach the completed Parts Kit for this production operation to this traveler. Ensure that the serial number on the Parts Kit matches the serial number of this traveler. Verify that the Parts Kit received is complete.

J. Spostak
Process Engineering/Designee

9/23/05
Date

3.0 Post MTF Magnet Preparation Non-IP Magnet End

3.1 Does magnet require a purge of compressed dry nitrogen (N_2)?

☒ YES, PURGE REQUIRED, Proceed to Step 3.2

☐ NO, PURGE NOT REQUIRED, Proceed to Step 4.0

STOP

Responsible Authority/Physicist — Date: 19-SEP 2005

3.2 If YES box was checked in Step 3.1, perform a required purge for a minimum of 2.5 days (3 days maximum) at a flow rate of 5 CFH of N_2.

	Purge Time	Purge Date	Purge Flow Rate
Start	3:30 PM	9/19/05	5 CFH
Finish	7:30 AM	9/23/05	5 CFH

Technician(s) — Date: 9/23/05

3.3 Compress the bellows on the Non-IP End using Bellows Compression Tool.

Technician(s) — Date: 9/19/05

4.0 Final Resistance Electrical Inspection

4.1 Perform an electrical inspection on each of the Individual Quadrants and the Cold Masses. Refer to the Valhalla and Leader Free Standing Coil Measurement Procedure (ES-292306).

To measure the resistance of a bussed Q2:

1. Use Valhalla Scientific 4300B digital micro-ohmmeter.
2. Set Test Current to 1 amp.
3. Set Scale to 2V full scale.
4. Turn temperature compensation on.
5. Turn test current off.
6. Put jumper between Q2a Quadrant #3 inner power lead and 5 KA bus as shown in figure.
7. Connect I_{HI} to the 5KA bus (Q2a Quadrant #3 inner power lead) as shown in figure.
8. Connect I_{LO} to the Q2b Quadrant #3 inner power lead as shown in figure.
9. Turn test current on.
10. Connect V_{HI} and V_{LO} buttons to voltage taps as shown below.
11. Read resistance and record in traveler.

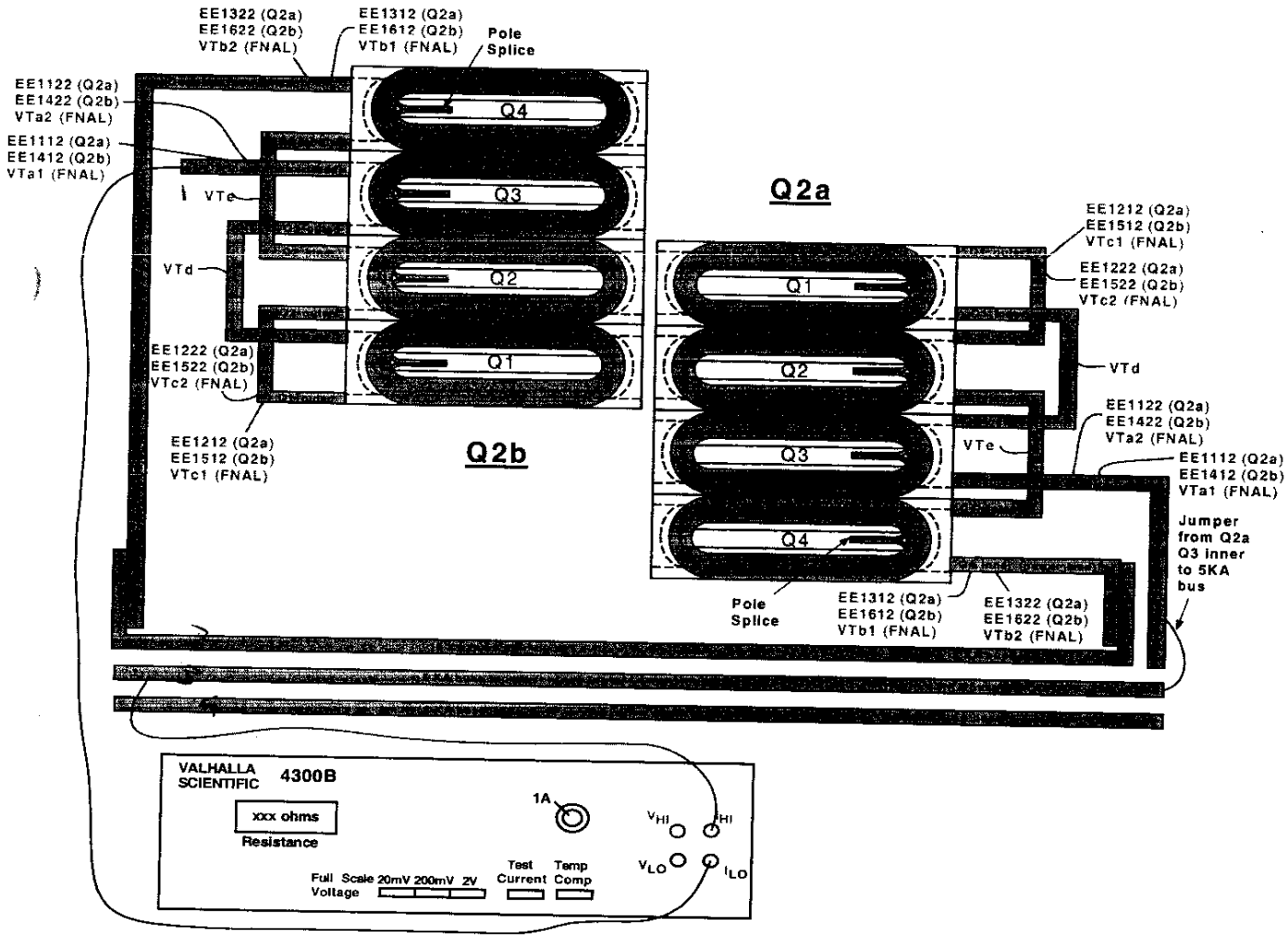

Note(s):
Sign of resistance reading should always be positive. If negative readings notify production supervisor.

TABLE 4.0.1				
(Q2a) Resistance				Nominal ~ 560 to 585 mΩ
Voltage Tap Serial Numbers				Quadrant Total Resistance
Connect	Fermi	CERN	Quadrant	Fermi
V_{HI}	VTdQ2a	EMPTY	Quadrant 1	573.8 mΩ
V_{LO}	VTc1Q2a	EE1212		
V_{HI}	VTc1Q2a	EE1212	Quadrant 2	574.0 mΩ
V_{LO}	VTeQ2a	EMPTY		
V_{HI}	VTa1Q2a	EE1112	Quadrant 3	573.8 mΩ
V_{LO}	VTdQ2a	EMPTY		
V_{HI}	VTeQ2a	EMPTY	Quadrant 4	574.3 mΩ
V_{LO}	VTb1Q2a	EE1312		

Note(s):
Sign of resistance reading should always be positive. If negative readings notify production supervisor.

TABLE 4.0.2				
				Fermi
V_{HI}	VTa1Q2a	EE1112	Quadrant #3 & #1	1148.0 mΩ
V_{LO}	VTc1Q2a	EE1212		Nominal ~ 1120 mΩ
V_{HI}	VTc1Q2a	EE1212	Quadrant #2 & #4	1148.7 mΩ
V_{LO}	VTb1Q2a	EE1312		Nominal ~ 1120 mΩ
V_{HI}	VTa1Q2a	EE1112	Total Cold Mass	~~2.299~~ 2.298 IR mΩ
V_{LO}	VTb1Q2a	EE1312		Nominal ~ 2.305 Ω

Technician(s)

9/23/05
Date

Check resistance of Redundant Voltage Taps.

TABLE 4.0.3			
Q2a Redundant Voltage Taps Resistance			
			Fermi
Connect	Fermi	CERN	Nominal ~1120 mΩ
V_{HI}	VTa2Q2a	EE1122	
V_{LO}	VTc2Q2a	EE1222	1149 mΩ
V_{HI}	VTc2Q2a	EE1222	
V_{LO}	VTb2Q2a	EE1322	1150 mΩ

Technician(s) Date 9/23/05

TABLE 4.0.4				
(Q2b) Resistance				Nominal ~ 560 to 585 mΩ
Voltage Tap Serial Numbers				Quadrant Total Resistance
Connect	Fermi	CERN	Quadrant	Fermi
V_{HI}	VTc1Q2b	EE1512	Quadrant 1	573.1 mΩ
V_{LO}	VTdQ2b	EMPTY		
V_{HI}	VTeQ2b	EMPTY	Quadrant 2	573.3 mΩ
V_{LO}	VTc1Q2b	EE1512		
V_{HI}	VTdQ2b	EMPTY	Quadrant 3	572.6 mΩ
V_{LO}	VTa1Q2b	EE1412		
V_{HI}	VTb1Q2b	EE1612	Quadrant 4	572.6 mΩ
V_{LO}	VTeQ2b	EMPTY		

Technician(s) Date 9/23/05

TABLE 4.0.5				
				Fermi
V_{HI}	VTc1Q2b	EE1512	Quadrant #1 & #3	1145 I.R.
V_{LO}	VTa1Q2b	EE1412		Nominal ~ 1120 m Ω
V_{HI}	VTb1Q2b	EE1612	Quadrant #4 & #2	1146
V_{LO}	VTc1Q2b	EE1512		Nominal ~ 1120 m Ω
V_{HI}	VTb1Q2b	EE1612	Total Cold Mass	2292
V_{LO}	VTa1Q2b	EE1412		Nominal ~ 2.305 Ω

Technician(s) Date 9/23/05

Check the resistance of the Redundant Voltage Taps.

TABLE 4.0.6			
Q2b Redundant Voltage Taps			
			Resistance
Connect	**Fermi**	**CERN**	**Fermi**
V_{HI}	VTc2Q2b	EE1522	
V_{LO}	VTa2Q2b	EE1422	1146 Ω
V_{HI}	VTb2Q2b	EE1622	
V_{LO}	VTc2Q2b	EE1522	1146 Ω

Technician(s) Date 9/23/05

5.0 Q2A Final Inductance and Q Electrical Inspection

To measure Ls and Q of a Bussed Q2a:

1. Use Agilent 4263B LCR Meter.
2. Turn power on by pushing line button. Wait 30 seconds until display screen is lit.
3. Recall program #1. To do this, push recall (Rcl) button, then push the #1 button, then push the Enter button.
4. Push Auto/Hold button to release hold.
5. Verify that the frequency displayed in the upper right corner of the display screen is 1000 Hz and the level recorded in the lower right corner of the display screen is 1V or 1000 mV.
6. Connect jumper between Q2a/Quadrant 3 inner power lead and 5KA bus as shown in figure.
7. Connect H_{cur} to Q2b/Quadrant 3 inner power lead as shown in figure.
8. Connect L_{cur} to 5KA bus as shown in figure.
9. Connect H_{pot} and L_{pot} buttons to voltage taps as shown below.

To measure Q2a:

- To measure Q1, connect H_{pot} to VTc1 (EE1212 for Q2a), and L_{pot} to VTd.
- To measure Q2, connect H_{pot} to VTe, and L_{pot} to VTc1 (EE1212 for Q2a).
- To measure Q3, connect H_{pot} to VTd and L_{pot} to VTa1 (EE1112 for Q2a).
- To measure Q4, connect H_{pot} to VTb1 (EE1312 for Q2a), and L_{pot} to VTe.
- To measure total, connect H_{pot} to VTb1 (EE1312 for Q2a),and L_{pot} to VTa1 (EE1112 for Q2a).

10. Read Ls and Q from display and record in traveler.

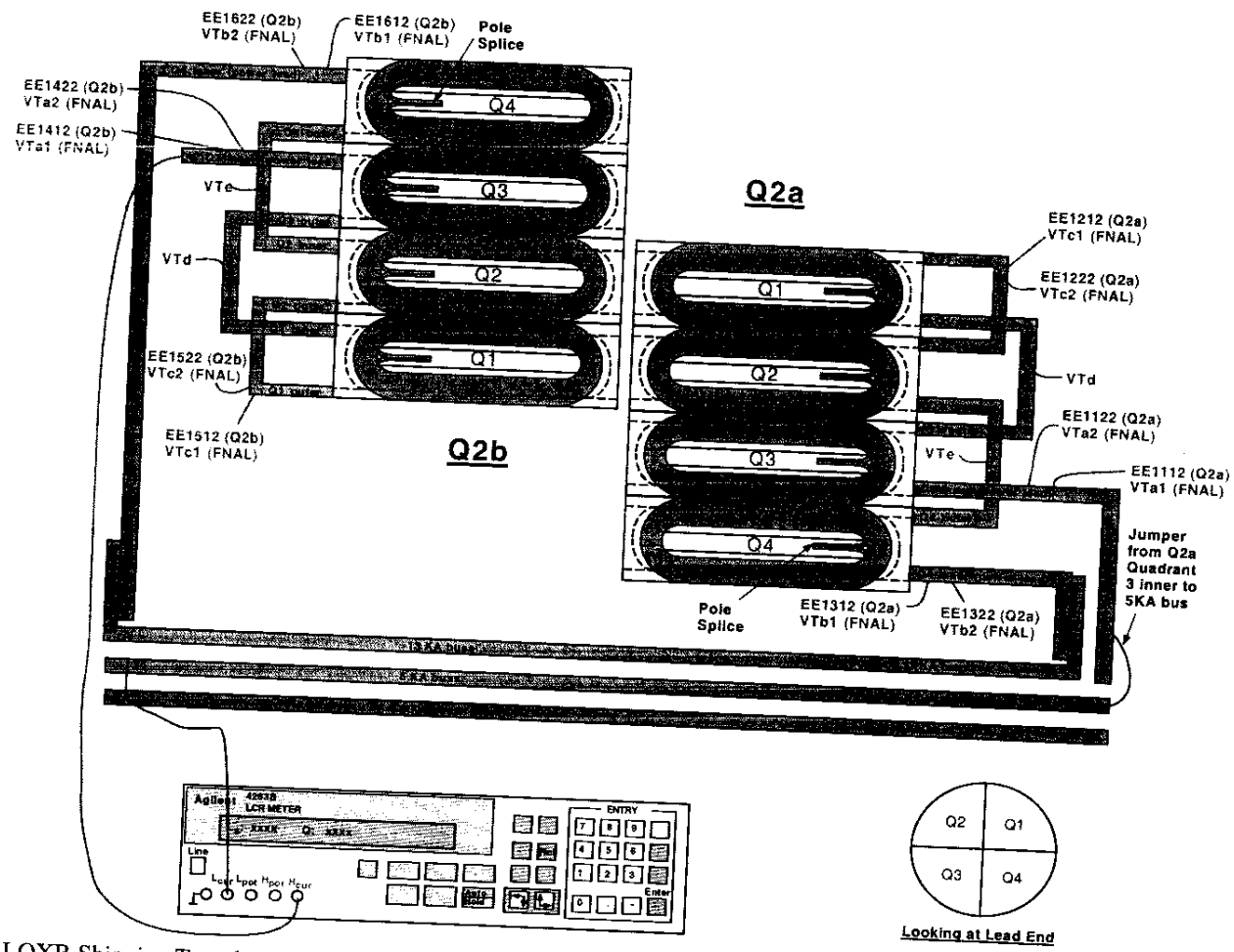

Note(s):
All Inductance readings are taken at 1KHz.

TABLE 5.0.1				
(Q2a) Inductance				Nominal ~ 3.34 to 3.48 mH
Voltage Tap Serial Numbers				Quadrant Total Inductance
Connect	Fermi	CERN	Quadrant	Fermi
				~~3~~ IR
LPOT	VTdQ2a	EMPTY	Quadrant 1	3.44 mH
HPOT	VTc1Q2a	EE1212		
LPOT	VTc1Q2a	EE1212	Quadrant 2	3.44 mH
HPOT	VTeQ2a	EMPTY		
LPOT	VTa1Q2a	EE1112	Quadrant 3	3.40 mH
HPOT	VTdQ2a	EMPTY		
LPOT	VTeQ2a	EMPTY	Quadrant 4	3.44 mH
HPOT	VTb1Q2a	EE1312		

TABLE 5.0.2				
				Nominal ~ 13.28 to 13.78 mH
				Fermi
LPOT	VTa1Q2a	EE1112	Total Cold Mass	13.72 mH
HPOT	VTb1Q2a	EE1312		

Technician(s)

Date

TABLE 5.0.3				
(Q2a) Q-Factor				Nominal ~ 3.7 – 4.0
Voltage Tap Serial Numbers				Quadrant Total Q
Connect	Fermi	CERN	Quadrant	Fermi
LPOT	VTdQ2a	EMPTY	Quadrant 1	3.8
HPOT	VTc1Q2a	EE1212		
LPOT	VTc1Q2a	EE1212	Quadrant 2	3.8
HPOT	VTeQ2a	EMPTY		
LPOT	VTa1Q2a	EE1112	Quadrant 3	3.8
HPOT	VTdQ2a	EMPTY		
LPOT	VTeQ2a	EMPTY	Quadrant 4	3.7
HPOT	VTb1A2a	EE1312		

TABLE 5.0.4				
				Nominal ~ 3.7 – 4.0
				Fermi
LPOT	VTa1Q2a	EE1112	Total Cold Mass	3.8
HPOT	VTb1Q2a	EE1312		

Technician(s) Date 9/25/05

6.0 Q2B Final Inductance and Q Electrical Inspection

To measure Ls and Q of a Bussed Q2b:

1. Use Agilent 4263B LCR Meter.
2. Turn power on by pushing line button. Wait 30 seconds until display screen is lit.
3. Recall program #1. To do this, push recall (Rcl) button, then push the #1 button, then push the Enter button.
4. Push Auto/Hold button to release hold.
5. Verify that the frequency displayed in the upper right corner of the display screen is 1000Hz and the level recorded in the lower right corner of the display screen is 1V or1000 mV.
6. Connect jumper between Q2a/Quadrant 3 inner power lead and 5KA bus as shown in figure.
7. Connect H_{cur} to 5KA bus as shown in figure.
8. Connect L_{cur} to Q2b/Quadrant 3 inner power lead as shown in figure.
9. Connect H_{pot} and L_{pot} buttons to voltage taps as shown below.

To measure Q2b:

- To measure Q1, connect H_{pot} to VTc1 (EE1512 for Q2b), and L_{pot} to VTd.
- To measure Q2, connect H_{pot} to VTe and L_{pot} to VTc1 (EE1512 for Q2b).
- To measure Q3, connect H_{pot} to VTd and L_{pot} to VTa1 (EE1412 for Q2b).
- To measure Q4, connect H_{pot} to VTb1 (EE1612 for Q2b) and L_{pot} to VTe.
- To measure total, connect H_{pot} to VTb1 (EE1612 for Q2b) and L_{pot} to VTa1 (EE1412 for Q2b).

10. Read Ls and Q from display and record in traveler.

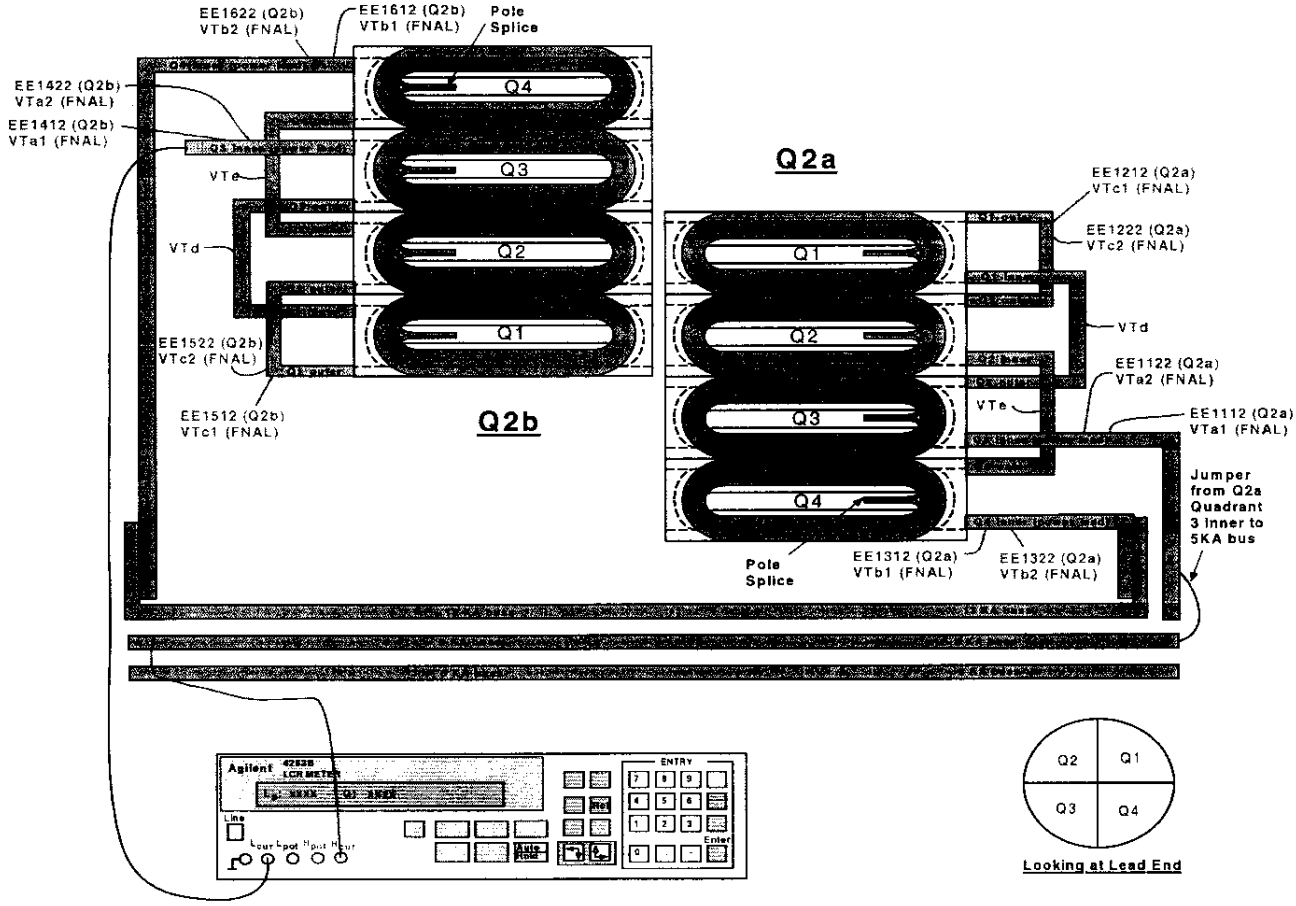

TABLE 6.0.1				
(Q2b) Inductance				Nominal ~ 3.34 to 3.48 mH
Voltage Tap Serial Numbers				Quadrant Total Inductance
Connect	Fermi	CERN	Quadrant	Fermi
H_{POT}	VTc1Q2b	EE1512	Quadrant 1	3.45 mH
L_{POT}	VTdQ2b	EMPTY		
H_{POT}	VTeQ2b	EMPTY	Quadrant 2	3.45 mH
L_{POT}	VTc1Q2b	EE1512		
H_{POT}	VTdQ2b	EMPTY	Quadrant 3	3.40 mH
L_{POT}	VTa1Q2b	EE1412		
H_{POT}	VTb1Q2b	EE1612	Quadrant 4	3.44 mH
L_{POT}	VTeQ2b	EMPTY		

TABLE 6.0.2				
				13.28 to 13.78 mH
				Fermi
H_{Pot}		EE1612	Total Cold Mass	13.76 mH
L_{Pot}	VTa1Q2b	EE1412		

Chris Romero / O. Finan
Technician(s)

9/23/05
Date

TABLE 6.0.3				
(Q2b) Q-Factor				Nominal ~ 3.7 – 4.0
Voltage Tap Serial Numbers				Quadrant Total Q
Connect	Fermi	CERN	Quadrant	Fermi
H_{POT}	VTc1Q2b	EE1512	Quadrant 1	3.8
L_{POT}	VTdq2b	EMPTY		
H_{POT}	VTeQ2b	EMPTY	Quadrant 2	3.9
L_{POT}	VTc1Q2b	EE1512		
H_{POT}	VTdQ2b	EMPTY	Quadrant 3	3.9
L_{POT}	VTa1Q2b	EE1412		
H_{POT}	VTb1Q2b	EE1612	Quadrant 4	3.8
L_{POT}	VTeQ2b	EMPTY		

TABLE 6.0.4				
[illegible]				Nominal ~ 3.7 to 4.0
				Fermi
H_{POT}	VTb1Q2b	EE1612	Total Cold Mass	3.9
L_{POT}	VTa1Q2b	EE1412		

Ines Ramos / O. Freiman
Technician(s)

9/23/05
Date

7.0 Final Thermometer and Heater Electrical Inspection

To measure the resistance of a Thermometer (RTD):

Use Hewlett Packard HP3457A digital multimeter.

1. Record temperature of building within +/- 5 degrees.
2. Press line button to turn line on.
3. Connect wires as shown in Figure below.
   U+ (Black) to Sense HI
   I+ (Yellow) to Input HI
   U- (Red) to Sense LO
   I- (Green) to Input LO
4. Push blue button (function key) once.
5. Push OHMF button.
6. Verify arrow in readout is above the 4WΩ (meaning a 4 wire resistance measurement).
7. Read resistance in ohms and record in traveler.

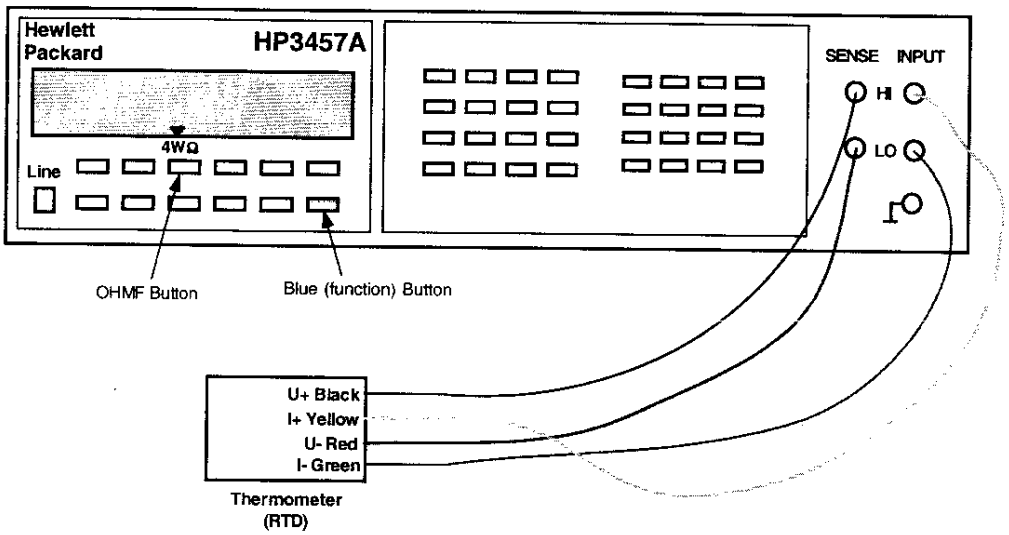

To measure the resistance of a Cryogenic (Warm-up) Heater

1. Use Hewlett Packard HP3457A digital multimeter.
2. Record temperature of building within +/- 5 degrees.
3. Press line button to turn line on.
4. Connect wires as shown in Figure below.
5. Push blue button (function key) once.
6. Push OHMF button.
7. Verify arrow in readout is above the 4WΩ (meaning a 4 wire resistance measurement).
   Note: Although this is technically a 4 wire measurement, it is effectively a 2 wire measurement, since there are only 2 wires connected to each heater.
8. Read resistance in ohms and record in traveler.

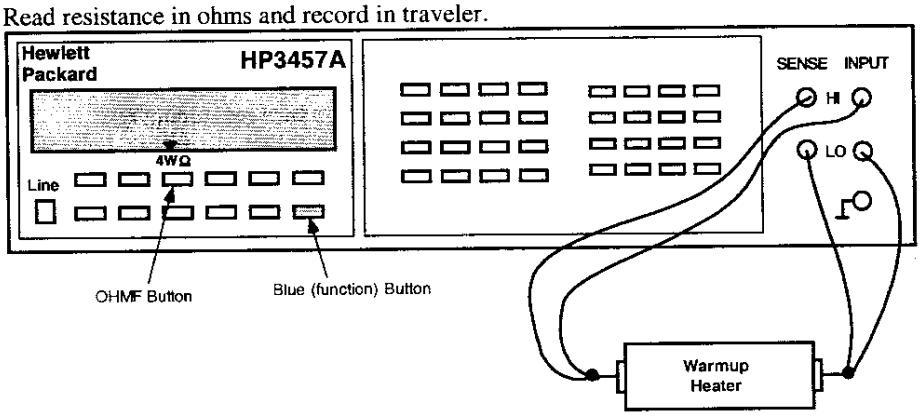

Table 7.0.1				
Q2a – RTD's and Cryogenic (warm-up) Heaters				
Temperature of Building (+/-5°): 75°			Fermi	
			F°/C°	
Component	Fermi	CERN	Resistance	Resistance to Ground
Q2A RTD, Primary Serial # SNG Original Resistance: ~~63.25~~ 61.983 Ω	**TaQ2a**	**TT8312**	63.8 Ω	**MΩ** **>20 MOhms**
Q2a RTD, redundant Serial # SNG Original Resistance: ~~67.217~~ 65.219 Ω	**TbQ2a**	**TT8322**	66.8 Ω	**MΩ** **>20 MOhms**
Q2A Cryogenic (warm-up) Heater (LE) – wire toward cold mass end plate (CERN #11+)	**W1aQ2A**	**EH8312+**		
Q2A Cryogenic (warm-up) Heater (LE) – wire toward cold mass mag center (CERN #11-)	**W2aQ2A**	**EH8312-**	18.19 Ω	**MΩ** **>20 MOhms**
Q2A Cryogenic (warm-up) Heater (Non-LE) – wire toward cold mass end plate (CERN #21+)	**W1bQ2A**	**EH8322+**		
Q2A Cryogenic (warm up) Heater (Non-LE) – wire toward cold mass mag center (CERN #21-)	**W2bQ2A**	**EH8322-**	17.84 Ω	**MΩ** **>20 MOhms**

Technician(s) [signature] / O. Friaza

Date 9/28/05

Table 7.0.2				
Q2b – RTD's and Cryogenic (warm-up) Heaters				
Temperature of Building (+/-5°): 75°			Fermi	
			F°/C°	
Component	Fermi	CERN	Resistance	Resistance to Ground
Q2b RTD, Primary Serial # Original Resistance: 67.353 Ω	TaQ2b	TT8332	66.81 Ω	MΩ >20 MOhms
Q2b RTD, redundant Serial # Original Resistance: 67.65.413 Ω	TbQ2b	TT8342	67.09 Ω	MΩ >20 MOhms
Q2B Cryogenic (warm-up) Heater (LE) – wire toward cold mass end plate (CERN #11+)	W1aQ2b	EH8332+		
Q2B Cryogenic (warm-up) Heater (LE) – wire toward cold mass mag center (CERN #11-)	W2aQ2b	EH8332-	17.41 Ω	MΩ >20 MOhms
Q2B Cryogenic (warm-up) Heater (Non-LE) – wire toward cold mass end plate (CERN #21+)	W1bQ2b	EH8342+		
Q2B Cryogenic (warm up) Heater (Non-LE) – wire toward cold mass mag center (CERN #21-)	W2bQ2b	EH8342-	17.72 Ω	MΩ >20 MOhms

Using the Hewlett Packard HP3457A digital multimeter, measure the Strip Heater Resistance for Q2a and Q2b.

TABLE 7.0.3				
Q2a Strip Heater Resistance				
Fermi	CERN	Description	Limit	Fermi Resistance
H1aQ2a H2aQ2a	YT1112+ YT1112-	Circuit A	18.20 to 21Ω	20.02 Ω
H1bQ2a H2bQ2a	YT1122+ YT1122-	Circuit B	18.20 to 21Ω	19.92 Ω

TABLE 7.0.4				
Q2b Strip Heater Resistance				
Fermi	CERN	Description	Limit	Fermi Resistance
H1aQ2b H2aQ2b	YT1132+ YT1132-	Circuit A	18.20 to 21Ω	19.28 Ω
H1bQ2b H2bQ2b	YT1142+ YT1142-	Circuit B	18.20 to 21Ω	19.36 Ω

Technician(s) Date 9/25/05

8.0 Final Power Lead Electrical Inspection

8.1 Using the HP3457A, connect power thru the connector Power Leads (HA2 and HB2 to measure Q2-H2 or VA2 and VB2 to measure Q2-V2). Connect the Sense Leads as shown in table below and record resistance.

(Magnet Bus Leads)

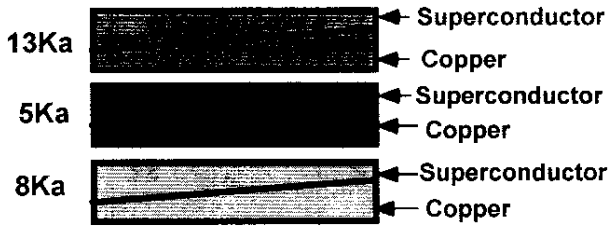

(Corrector Bus Leads)

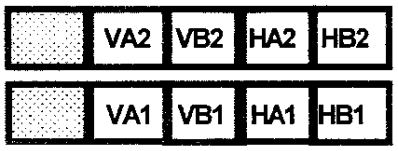

(View Looking into Q2b)

TABLE 8.0.1			
MCBX Corrector Coil Taps			
Component	Fermilab Label	CERN Label	Fermi Resistance Nominal 0.040 Ω
Q2-H2	VTH2	EE8122	.04 Ω
	HA2	N/A	
Q2-V2	VTV2	EE8112	.04 Ω
	VA2	N/A	

Technician(s) [signature]

Date 9/23/05

8.2 Check Q1 Instrumentation Bus Wires for Continuity.

TABLE 8.0.2

Module	Pin	Fermi	CERN	KEK	Description	Fermi Done
M2	1	VTa1Q1	EE1111	a1	Q1 Lead Voltage Tap "a", primary	/
M2	2	VTa2Q1	EE1121	a2	Q1 Lead Voltage Tap "a", redundant	/
M2	3	VTc1Q1	EE1211	c1	Q1 Center Voltage Tap "c", primary	/
M2	4	VTc2Q1	EE1221	c2	Q1 Center Voltage Tap "c", redundant	/
M2	5	VTb1Q1	EE1311	b1	Q1 Lead Voltage Tap "b", primary	/
M3	5	VTb2Q1	EE1321	b2	Q1 Lead Voltage Tap "b", redundant	/
M5	1	VTH1	EE8121		Corrector voltage tap Q1-H1 (skew dipole) (on MCBX, MCBXH, A+ lead)	/
M5	2	VTV1	EE8111		Corrector voltage tap Q1-V1 (normal dipole) (on MCBX, MCBXV A+ lead)	/
M7	1	W1aQ1	EH8311+		Q1 Cryogenic Heater lead end - wire at top (CERN #1 I+)	/
M7	2	W2aQ1	EH8311-		Q1 Cryogenic Heater lead end - wire at bottom (CERN #1 I-)	/
M7	3	W1bQ1	EH8321+		Q1 Cryogenic Heater non-lead end - wire at top (CERN #2 I+)	/
M7	4	W2bQ1	EH8321-		Q1 Cryogenic Heater non-lead end - wire at bottom (CERN #2 I-)	/
M9	1	H1aQ1	YT1111+	HA1	Q1 Protection (Strip) Heater, ("a" circuit) (CERN lead #1+)	/
M9	3	H2aQ1	YT1111-	HA2	Q1Protection (Strip) Heater, ("a" circuit) (CERN lead #1-)	/
M9	5	H1bQ1	YT1121+	HB1	Q1 Protection (Strip) Heater, ("b" circuit) (CERN lead #2+)	/
M10	4	H2bQ1	YT1121-	HB2	Q1 Protection (Strip) Heater, ("b" circuit) (CERN lead #2-)	/
M12	1	TaQ1_I+	TT8311 I+		Q1 RTD, primary Wire color: Yellow	/
M12	2	TaQ1_I-	TT8311 I-		Q1 RTD, primary Wire color: Green	/
M12	3	TaQ1_V+	TT8311 U+		Q1 RTD, primary Wire color: Black	/
M12	4	TaQ1_V-	TT8311 U-		Q1 RTD, primary Wire color: Red	/
M12	5	TbQ1_I+	TT8321 I+		Q1 RTD, primary Wire color: Yellow	/
M12	6	TbQ1_I-	TT8321 I-		Q1 RTD, primary Wire color: Green	/
M12	11	TbQ1_V+	TT8321 U+		Q1 RTD, primary Wire color: Black	/
M12	10	TbQ1_V-	TT8321 U-		Q1 RTD, primary Wire color: Red	/

O. Fuentes / Gino Romero
Technician(s)

9/23/05
Date

8.3 Hipot according to table below. Hipot to 1500V. Ramp Rate 3V/second. Dwell Time 30 seconds. Maximum leakage is 3μA.

STOP

Have Crew Chief verify setup and sign below before continuing.

Crew Chief _____ Date 9/23/05

Hipot Heaters to Coil and Ground

TABLE 8.0.3

High Potential	Grounded	Floating	Fermi Leakage
All Strip Heaters	Coils, Yoke, Q1 Instrumentation Bus, Lead and Corrector Coil Busses, RTD's and Warm-up Heaters	Nothing	373nA A

Hipot Coil to Heaters and Ground.

TABLE 8.0.4

High Potential	Grounded	Floating	Fermi Leakage
All Coils	Strip Heaters, Yoke, Q1 Instrumentation Bus, 8kA and 5kA Lead Busses and Corrector Coil Busses, RTD's and Warm-up Heaters	Nothing	181nA A

Technician(s) _____ Date 9/23/05

STOP

Responsible Authority/Physicist _____ Date 9/23/05

8.4 Locate and identify the 13 kA Bus Leads.

Technician(s) _____ Date 9-24-05

8.5 Verify the 13 kA Bus Leads have been properly identified.

Lead Person _____ Date 9-24-05

8.6 Verify the 13 kA Bus Leads have been proper identified.

Responsible Authority/Physicist _____ Date 9-24-05

8.7 Cut the 13 kA Bus Leads within 1" of the conductor connector.

Technician(s) _____ Date 9/24/05

8.8 Insulate the 13 kA Bus Leads using approved methods.

Technician(s) _____ Date 9/24/05

8.9 Separate, identify, and label the Non-IP Magnet End Corrector leads as per (ME-369895) and figure below.

Note(s):

120 Spliced area dimension for magnet leads does not include an approximate 40mm of extra buffer cable. Do not cut unless approved by Production Supervisor.

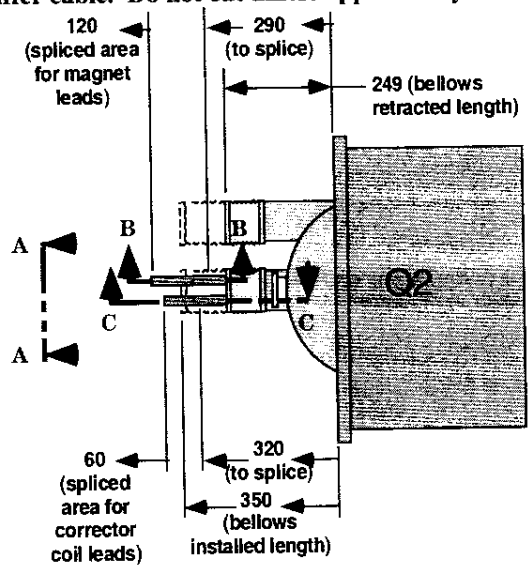

Top (plan) view of non-IP end of Q2

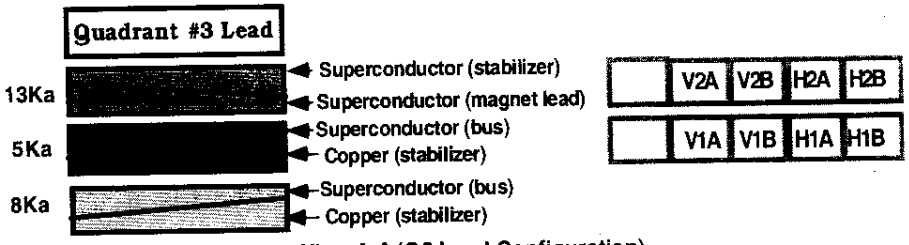

View A-A (Q2 Lead Configuration)

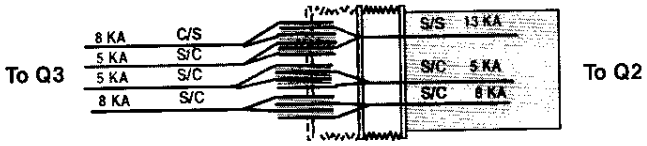

Section B-B (Magnet Lead Configuration)

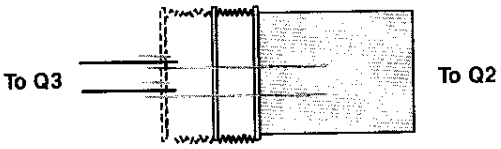

Section C-C (Corrector Bus Lead Configuration)

Note(s):

These leads must be insulated using approved methods (refer to Lead Installation ES-XXXXXX), first as an individual lead, then insulated as a pair to prevent 'shorting' to the other leads.

O. Fi

Technician(s)

9/24/05

Date

9.0 Post MTF Magnet Preparation IP Magnet End

9.1 Separate, identify, and label the IP Magnet End Corrector leads as per Q2 Module Assembly (ME-369895) and figure below:

Note(s):

120 Spliced area dimension for magnet leads does not include an approximate 40mm of extra buffer cable. Do not cut unless approved by Production Supervisor.

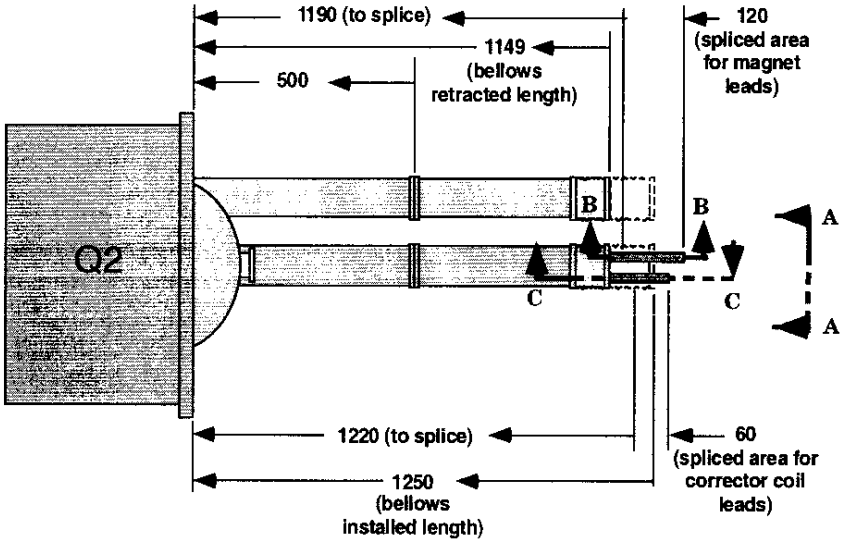

Top (plan) view of IP end of Q2

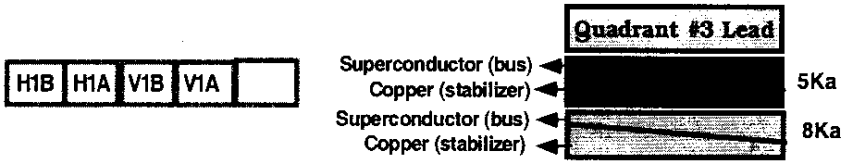

View A-A (Q2 Lead Configuration)

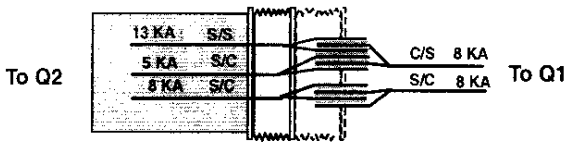

Section B-B (Magnet Lead Configuration)

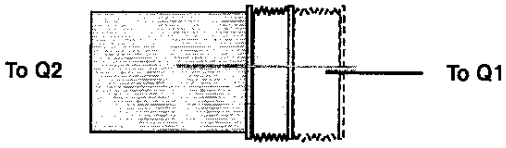

Section C-C (Corrector Bus Lead Configuration)

Note(s):

This lead must be insulated using approved methods to prevent 'shorting' to the other leads.

O. Fria
Technician(s)

9/24/05
Date

9.2 Remove the Bellows Compression Tooling.

O. Friaz
Technician(s)

9/26/05
Date

9.3 Secure bellows with Bellow Restraint/Protective Cover (MA-390153) using Screws (MA-390180).

O. Friaza / Ines Ramos
Technician(s)

9/26/05
Date

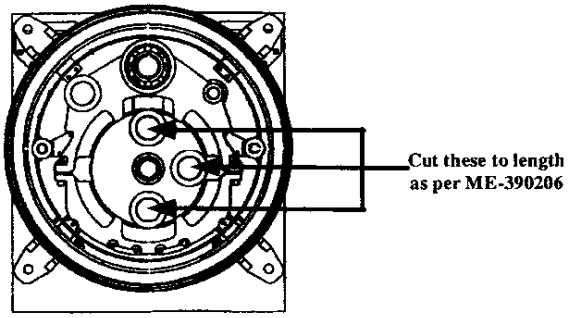

9.4 Measure and mark the tubes for cutting as per IP END AS-SHIP DETAIL VIEW of Q2 Cryostat General Assembly (ME-390206).

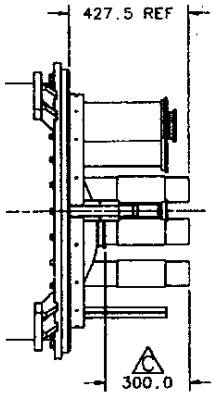

IP END
Side View

Technician(s)

9.26.05
Date

9.5 Verify that the proper tubes have been measured and marked correctly and are acceptable for cutting.

STOP

T. Pim
Responsible Authority/Physicist

9/26/05
Date

9.6 Cut the proper tubes using approved methods.

Technician(s)

9-26-05
Date

STOP

9.7 Verify the tubes have been properly cut.

Lead Person

9/26/05
Date

STOP

9.8 Verify that the Bellows End Sliding Flange Assembly (ME-390021) was installed correctly using Bolts on both the Non-IP and IP Magnet Ends.

Lead Person

9/27/05
Date

10.0 Magnet End Preparation

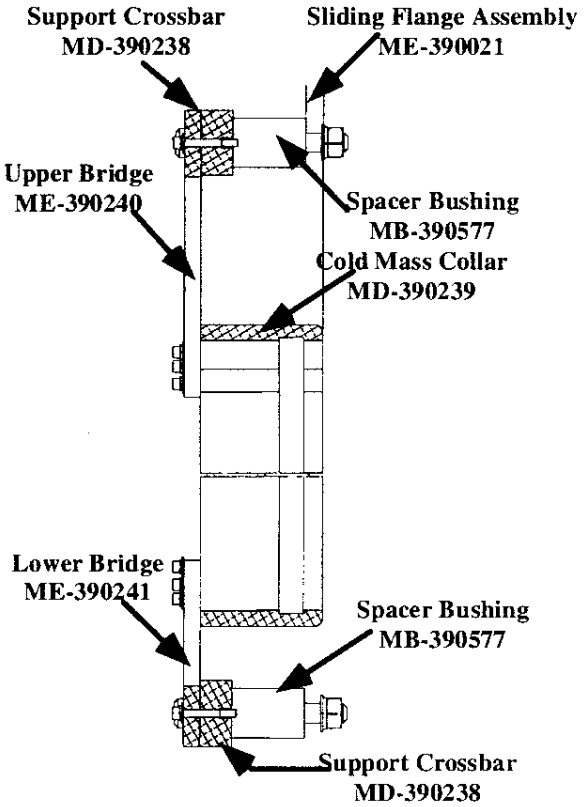

Shipping Restraint
ME-390249
Side View

10.1 Acquire Q2 Shipping Restraint Assembly (ME-390249)(2 ea)

J. [illegible] 9-27-05

Technician(s) Date

10.2 Install the Shipping Restraint on the Non- IP Magnet end.

Note(s):

Installation Shipping Restraint bolts should be only finger tight until complete assembly is installed.

10.2.1 Install Cold Mass Collar (ME-390239) and secure using Socket Head Cap Screws (MA-393191), Plain Washers (MA-393060) and Lock Washers (MA-393061) per Q2 Shipping Restraint Assembly (ME-390249).

10.2.2 Install Upper Support Cross Bar (MD-390238)(1 ea) with Spacer Bushing (MB-390577) (2 ea) using Bolt (MA-393183 (2 ea), Lock Washer (MA-393186) (4 ea), Plain Washer (MA-393185) (4 ea), and Nut (MA-393184)(2 ea).

10.2.3 Install Lower Support Cross Bar (MD-390238)(1 ea) with Spacer Bushing (MB-390577) (2 ea) using Bolt (MA-393183 (2 ea), Lock Washer (MA-393186) (4 ea), Plain Washer (MA-393185) (4 ea), and Nut (MA-393184)(2 ea).

10.2.4 Install the Upper Bridge (ME-390240) to the Upper Support Bar using Bolt (MA-393187) (7 ea), Lock Washer (MA-393061) (7ea), and Flat Washer (MA-393060) (7ea).

10.2.5 Install the Lower Bridge (ME-390241) to the Lower Support Bar using Bolt (MA-393187) (7 ea), Lock Washer (MA-393061) (7ea), and Flat Washer (MA-393060) (7ea).

10.2.6 Secure Upper Bridge to Cold Mass Collar with Bolt (MA-393191) (6 ea), Lock Washer (MA-393061) (6 ea), and Plain Washer (MA-393060) (6 ea).

10.2.7 Secure Upper Bridge to Cold Mass Collar with Bolt (MA-393191) (6 ea), Lock Washer (MA-393061) (6 ea), and Plain Washer (MA-393060) (6 ea).

10.2.8 Tighten all the Shipping Restraint Bolts.

Technician(s) _____ Date 9-27-05

10.3 Install the Shipping Restraint on the IP Magnet end.

Note(s):

Installation Shipping Restraint bolts should be only finger tight until complete assembly is installed.

10.3.1 Install Cold Mass Collar (ME-390239) and secure using Socket Head Cap Screws (MA-393191), Plain Washers (MA-393060) and Lock Washers (MA-393061) per Q2 Shipping Restraint Assembly (ME-390249).

10.3.2 Install Upper Support Cross Bar (MD-390238)(1 ea) with Spacer Bushing (MB-390577) (2 ea) using Bolt (MA-393183 (2 ea), Lock Washer (MA-393186) (4 ea), Plain Washer (MA-393185) (4 ea), and Nut (MA-393184)(2 ea).

10.3.3 Install Lower Support Cross Bar (MD-390238)(1 ea) with Spacer Bushing (MB-390577) (2 ea) using Bolt (MA-393183 (2 ea), Lock Washer (MA-393186) (4 ea), Plain Washer (MA-393185) (4 ea), and Nut (MA-393184)(2 ea).

10.3.4 Install the Upper Bridge (ME-390240) to the Upper Support Bar using Bolt (MA-393187) (7 ea), Lock Washer (MA-393061) (7ea), and Flat Washer (MA-393060) (7ea).

10.3.5 Install the Lower Bridge (ME-390241) to the Lower Support Bar using Bolt (MA-393187) (7 ea), Lock Washer (MA-393061) (7ea), and Flat Washer (MA-393060) (7ea).

10.3.6 Secure Upper Bridge to Cold Mass Collar with Bolt (MA-393191) (6 ea), Lock Washer (MA-393061) (6 ea), and Plain Washer (MA-393060) (6 ea).

10.3.7 Secure Upper Bridge to Cold Mass Collar with Bolt (MA-393191) (6 ea), Lock Washer (MA-393061) (6 ea), and Plain Washer (MA-393060) (6 ea).

10.3.8 Tighten all the Shipping Restraint Bolts.

Technician(s) _____ Date 9-27-05

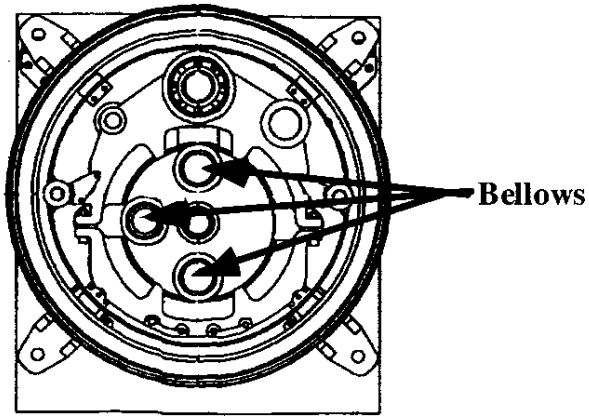

Q2 Magnet Non-IP End

10.4 Install Electrical Bus Shipping Restraint Short End Cover (MD-390752) into Lower Cold Mass Pipe to protect the Bus Wire.

Technician(s) _____ Date 9-27-05

10.5 Install Protective End onto PVC Bus Protector Tube.

Technician(s) _____ Date 9-27-05

10.6 Install Electrical Bus Shipping Restraint Assembly (MD-390748).

Note(s):

Magnet wires must be inserted into the Shipping Restraint Assembly during installation.

Note(s):

Shipping Restraint Assembly is to be dry fit assembled, NOT GLUED!!!

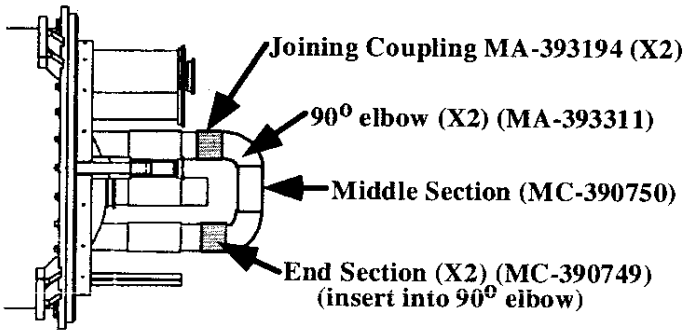

IP Magnet End
Side View

Technician(s) _____ Date 9-25-05

10.7 Install the Vinyl Flange Covers (MA-390491), (MA-390492), (MA-390493), (MA-390494), & the Alignment Fiducial Covers (MA-390495).

Technician(s) _____ Date 9 27 05

11.0 Shipping the Magnet

11.1 Acquire the Shipping Frame Assembly (ME-390686).

Technician(s) _____ Date 9-27-05

11.2 Acquire the following shipping hardware:

Eyebolt	**McMaster-Carr 3016T87**	**6 ea**
~~Eyebolt~~	~~McMaster-Carr 3016T85~~	~~6 ea~~
Hex Nut	**MA-393328**	**24 ea**
~~Flat Washer~~	~~MA-393328~~	~~12 ea~~
Lock Washer	**MA-393329**	**12 ea**
~~Chain w/2 Hooks~~	~~MA-390702~~	~~6 ea~~
Mounting Bolts	**MA-393321**	**9 ea**
~~Flat Washer~~	~~MA-393323~~	~~9 ea~~
Lock Washer	**MA-393322**	**9 ea**
~~Hoist Rings~~	~~McMaster-Carr (2994767)~~	~~10 ea~~

Technician(s) _____ Date 9-27-05

11.3 Remove the Hoist Rings (4 ea) from the Outer Frame as per Q2 Magnet Shipping Assembly (ME-390710).

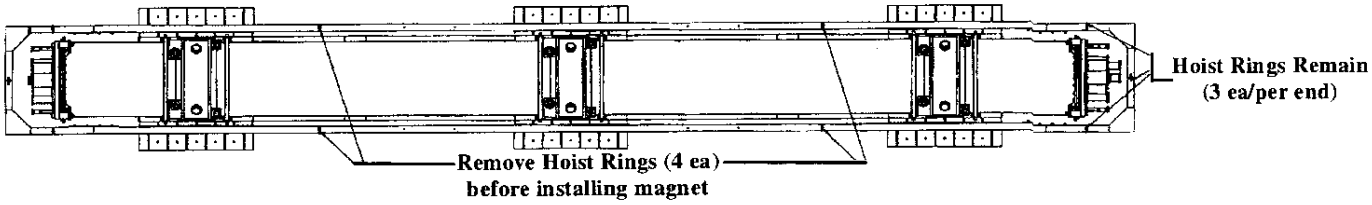

Technician(s) _____ Date 9-27-05

11.4 Install the Shock Indicators onto the Shipping restraints. Are Accelerometers (Shock Recorders) available for installation?

☒ **Yes - Install Accelerometers as per Responsible Authority and Figure 11.4-A. below.**

Shock Recorder Serial No. : M4 0 2 8 1

☐ **No - Accelerometers are NOT available for installation.**

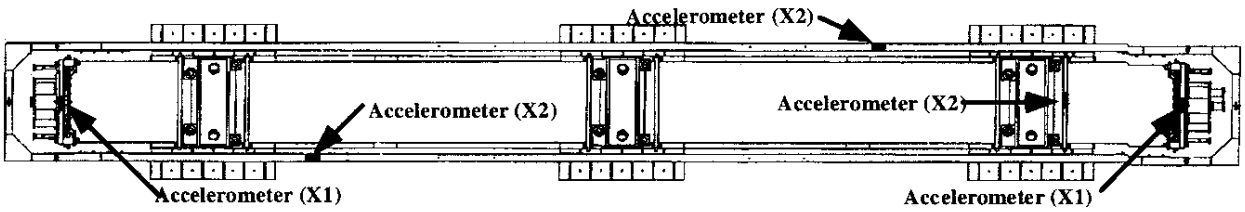

Figure 11.4-A

Technician(s) _____ Date 9.27.05

12.0 Magnet to Shipping Frame/Platform Installation

12.1 Transport the magnet to the Magnet Shipping Fixture and install using Bolt (MA-393321)(9 ea), Flat Washer (MA-393323)(9 ea), and Lock Washer (MA-393322)(9 ea). Torque bolts to XX FT/LBS.

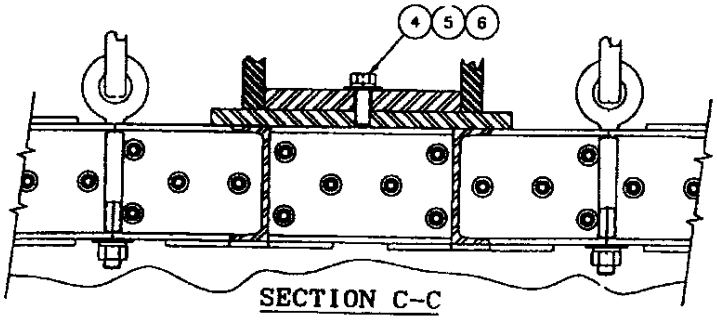

Q2 Shipping Assembly
ME-390710

Note(s):

Apply a small amount of Anti-Seize to all of the bolt threads prior to installing the bolts.

Technician(s) _____ Date 10/4/05

12.2 Install Magnet Identification Labels as per Q2 Identification Labeling Layout (ME-390760).

Example:

If Serial No. at bottom of Traveler is: LQXB09

Stencil Serial No. should be:HCLQXB_001-FL000009

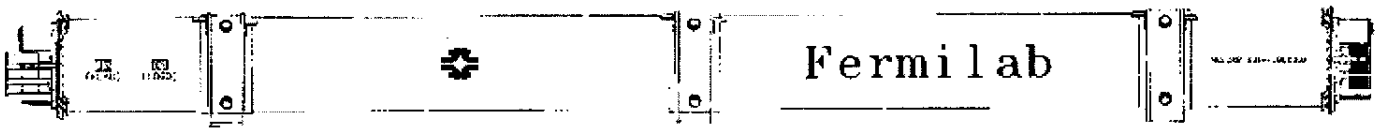

IP END **NON-IP END**

OPPOSITE SIDE VIEW

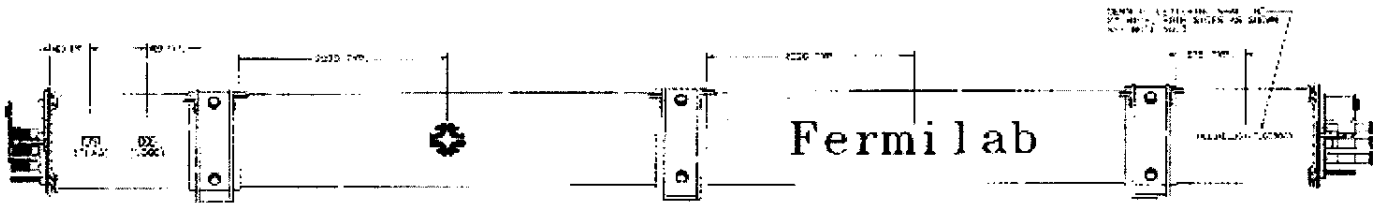

NON-IP END **IP END**

SIDE VIEW

Q2 Identification Labeling Layout (ME-390760)

Technician(s) Date 10/4/05

12.3 Verify Magnet has been properly labeled/stenciled, and serial number matches the bottom of this traveler and as per (ME-390760).

Example:

If Serial No. at bottom of Traveler is: LQXB09

Stencil Serial No. should be: HCLQXB_001-FL000009

Lead Person Date 10-4-05

12.4 Install Eyebolts, McMaster-Carr #3016T85 (6 ea), Eyebolts, McMaster Carr #3016T87 (6 ea), Flat Washer (MA-393328)(12 ea), and Lock Washer (MA-393329)(12 ea) into Shipping Fixture.

Note(s):

Install all Eyebolts #3016T85 on one side of the shipping fixture. Eyebolts #3016T87 go on the opposite side.

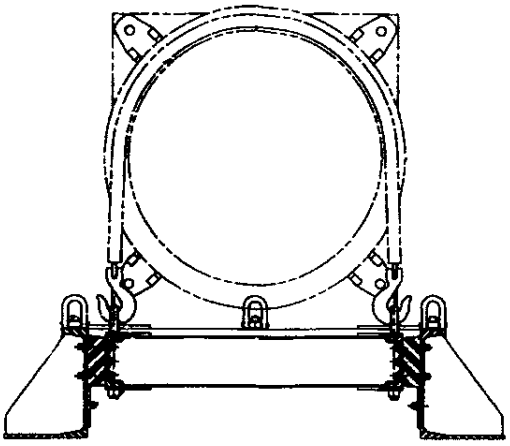

12.5 Install Lift All Pukka Wear Pad Protectors (MA-393345) onto magnet prior to installing Chain Sling.

Technician(s) _____ Date 10-4-05

12.6 Install chain sling w/2 hooks (MA-390702) (6 ea) into eyebolts.

Technician(s) _____ Date 10-4-05

12.7 Tighten eyebolts until chains are snug.

Technician(s) _____ Date 10-4-05

12.8 Install an additional nut (double nutting) on each eyebolt and tighten.

Technician(s) _____ Date 10-4-05

13.0 Final Inspection/Installation

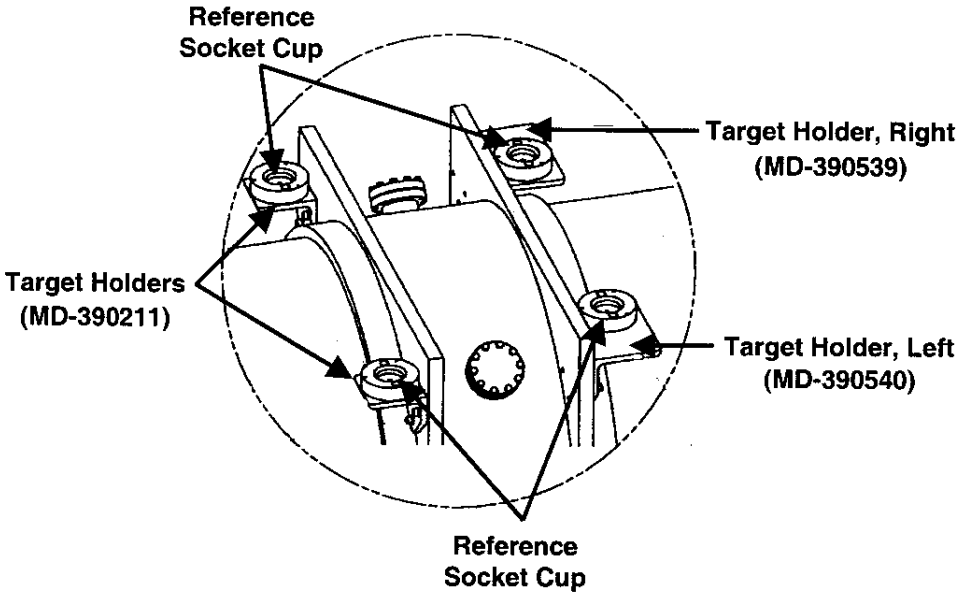

13.1 Verify Target Holder (MD-390211) (6 ea), Target Holder, Right (MD-390539) (3 ea), and Target Holder, Left (MD-390540) (3 ea) with Reference Socket Cup (MA-390426) (12 ea) and Protective Covers (MA-390495) are installed.

Lead Person _____ Date 10-4-05

13.2 Verify that the Target Holder had been pinned using Spring Pins (MA-393048) as per Q2 Cryostat General Assembly (ME-390206).

Crew Chief _____ Date 10-4-05

13.3 Verify that the ID plates are installed on the Vacuum Vessel.

Crew Chief _____ Date 10-4-05

14.0 Documentation Update

14.1 Perform the following:

- [x] **Update DSR Keywords.**
- [x] **Location.**
- [x] **Location Verified Date.**
- [x] **Status.**
- [x] **Make entry regarding work performed.**

TD/E&F Production Supervisor/designee

10/18/05
Date

15.0 Production Complete

15.1 Process Engineering verify that the Traveler is accurate and complete. This shall include a review of all steps to ensure that all operations have been completed and signed off. Ensure that all Discrepancy Reports, Nonconformance Reports, Repair/Rework Forms, Deviation Index and dispositions have been reviewed by the Responsible Authority for conformance before being approved.

Comments:

Process Engineering/Designee

NOV 0 8 2005
Date

TD - Engineering Fabri ion Component Kit List

ORIGINAL

Process Engineering

Component Serial No.: LQXB09
Kit submitted by: JOHN SZOSTAK
Fermi ID No.: 02943C
Date submitted: 24-Jun-05
Need date: 29-Jun-05
Deliver to: ICB
Job with Traveler No.: 333732
Job No.: 248
M&S task number: 300 | 1.1.1.3.4
Drawing Title: Q2 MAGNET SHIPPING ASSEMBLY
Drawing No.: ME-390710 | A

RECEIVED JUN 24 2005 MATERIAL CONTROL /IB4

Material Control
Parts available

Verified by: M. Schmidt
Fermi ID No.: 04223N
Date submitted to stockroom: 6/24/2005

INV POSTED

Parts issued

Issued by: G. Vo Zain
Fermi ID No.: 11939
Date issued: 6/29/05
Parts received by E&F: J. Szostak
Fermi ID No.: 02943C
Date received by E&F: 6/29/05

Doug Kelley 07/05/05

	Description	Dwg Size	Number	Rev	Unit	Quantity Required	Location	Quantity Issued	E&F Verified	Routing Form Number	Spares Number / Comment
1	KAPTON TAPE	MA	106723	A	EA	A/R					
2	¾" BLACK SHRINK TUBING	MA	318797	A	EA	A/R					
3	BELLOWS PROTECTORS	MA	390153	*	EA	6	ICB Has				
4	Q2 CRYOSTAT GENERAL ASSEMBLY	ME	390206	C	EA	1	ICB Has				
5	Q2 SHIPPING RESTRAINT ASSEMBLY	ME	390249	A	EA	2	ICB Has				
6	Q2 SHIPPING FIXTURE	ME	390686	A	EA	1	Railhead				
7	CHAIN SLING W/ 2 HOOKS	MA	390702	*	EA	6	ICB Has				
8	ELECTRICAL BUS SHIPPING RESTRAINT ASSEMBLY	MD	390748	*	EA	1	R7,3,4	1	GA	81801	12 pcs.
9	ELECTRICAL BUS SHORT END COVER	MD	390752	*	EA	1	R7,3,4	1	GA	81802	14 pcs.
10	Q2 IDENTIFICATION LABELS	ME	390760	*	EA	1	ICB Has				

PK0276

Serial No. LQXB08

TD - Engineering Fabri ion Component Kit List

ORIGINAL

	Description	Dwg Size	Number	Rev	Unit	Quantity Required	Location	Quantity Issued	E&F Verified	Routing Form Number	Spares Number / Comment
11	SCREWS	MA	393180	*	EA	36	ICB Has				
12	3/4-10 HEX HD. BOLT x 2.50 LG. - GR. 8 STL.	MA	393321	*	EA	9	ICB Has				
13	3/4 LOCK WASHER - STL.	MA	393322	*	EA	9	ICB Has				
14	3/4 FLAT WASHER - STL.	MA	393323	*	EA	9	ICB Has				
15	1"-8 HEX NUT - STL.	MA	393327	*	EA	12	ICB Has				
16	1" FLAT WASHER - STL.	MA	393328	*	EA	12	ICB Has				
17	1" LOCK WASHER - STL.	MA	393329	*	EA	12	ICB Has				
18	LIFT ALL PUKKA WEAR PAD PROTECTORS	MA	393345	*	EA	6	ICB Has				
19	EYEBOLT - 1"-8 x 12" LG.		390731-11	*	EA	4	ICB Has				
20	EYEBOLT - 1"-8 x 9" LG.		390731-7	*	EA	4	ICB Has				
21	ANTI-SEIZE			*	EA	A/R					
22	ACCELEROMETER			*	EA	ICB HAS					

RECEIVED
JUN 24 2005
MATERIAL CONTROL /IB4

PK0276

Serial No. LQXB08

Subject: Re: Q2 MAGNET SHIPPING ASSEMBLY - LQXB09 - PK0276
From: Marsha Schmidt <marsha@fnal.gov>
Date: Fri, 24 Jun 2005 11:16:21 -0500
To: John Szostak <szostak@fnal.gov>
CC: Jim Rife <jrife@fnal.gov>, Doug Kelley <wkelley@fnal.gov>, Marsha Schmidt <marsha@fnal.gov>

This kit was sent to IB4 today, however, the shipping frame is at the Railhead. When Jim requests the frame be sent to ICB, I will get the container delivered to him.

John Szostak wrote:

> Marsha,
>
> Q2 MAGNET SHIPPING ASSEMBLY (TR-333732)
>
> LQXB09 - PK0276
>
> is ready for processing.
>
> Call me if you have any questions.
>
> --
> John J. Szostak
> Fermi National Accelerator Laboratory
> P.O. Box 500
> Batavia, IL 60510
> (Tel.) (630) 840-2003
> (Fax) (630) 840-8079
> szostak@fnal.gov