Document ID:

8196

Q2 LMQXB Cold Mass Module Assembly Traveler

333643 / Rev. G

Job No:	**248**
E + F Project/Task No.:	**300/1.1.1.6.2**
M + S Project/Task No.:	**300/1.1.1.6.2**

Place This Side Down For Scanning!!!

Magnet Travelers

LMQXB10-0

Document ID:

8196

Job No.:

248

Project/Task No.

300/1.1.1.6.2

Series:

LQXB

Serial No:

LMQXB10

Rework ID:

0

Specification No.:

333643

Revision:

G

LMQXB10-0

Fermi National Accelerator Laboratory
Batavia, IL 60510

LARGE HADRON COLLIDER
Q2 - LMQXB
COLD MASS MODULE ASSEMBLY TRAVELER

Reference Drawing(s):
Q2 Cold Mass Welded Assembly (ME-390309)
Q2 Module Assembly (ME-369895)

Project/Task Number: *300/1.1.1.6.2*

Released By: *John Szostak* **Magnet/Device Series:** *LQXB*

Date Issued: *10/6/2005 11:18:09 AM* **Scanned Pages:** 135

Prepared by: J. Szostak

Title	Signature	Date
TD / E&F Process Engineering	*Thomas Gardner* Bob Jensen / Designee	*10/6/05*
TD / LHC Production Supervisor	*Jim Rife* Jim Rife / Designee	*10/6/05*
TD / LHC Production Engineer	*Fred Nobrega* Rodger Bossert / Designee	*10/6/05*
TD / LHC Project Engineer Cryostat	*Tom Nicol* Tom Nicol / Designee	*10/6/05*
TD / LHC Project Physicist	*Andy Hocker* Michael Lamm / Designee	*10/6/05*
TD / LHC Program Manager	*Jim Kerby* Jim Kerby / Designee	*10/6/05*

Revision Page (1 of 4)

Revision	Step No.	Revision Description	TRR No.	Date
None	N/A	Initial Release	N/A	10/15/02
A	6.5	Modified Step. Changed MiniLevel Tolerance to +/- 0.05 mm/m per Tom Page.	1513	7/17/03
	6.10	Modified Step. Changed MiniLevel Tolerance to +/- 0.05 mm/m per Tom Page.		
	7.18	Modified Step. Changed to "Cut Q2b Quadrant 4 Lead at end of splice per Drawing (ME-369895)."		
	7.22	Modified Step. Added Picture to show all three Bus Leads. (13kA, 5kA 8kA)		
	7.29.2	Modified Step. Changed End of step to read "...Figure 7.29.2-A below." Corrected Picture to reflect accurate wiring diagram. Per **DR No. HGQ-0374**.		
	7.36	Modified Step. Changed MiniLevel Tolerance to +/- 0.05 mm/m per Tom Page.		
	8.1	Modified Step. Added Voltage Tap Serial Numbers to Tables.		
	11.11	Added Step. "Tack weld the corrector mounting hardware in place as per Q2 Coldmass Welded Assembly (ME-390309)."		
	11.13	Added Step. "Mount and adjust the Shipping restraint screws."		
	13.1	Modified Step. Added Voltage Tap Serial Numbers to Tables.		
	14.1	Modified Step. Added new wire information for installation of Hypertronics per Mike Lamm.		
	14.2	Modified Step. Added new wire information for installation of Hypertronics per Mike Lamm.		
B	6.11	Added Step. "Perform a Stretched Wire Verification Measurement."	1578	1/15/04
	7.1	Removed Step. "Obtain Lead Bus (ME-369825). Inspect Bus for damaged or broken areas. Clean Bus using lint free Heavy Duty Wipers (Fermi stock 1660-0150) and Isopropyl Alcohol (Fermi stock 1920-0300)." Moved to Q2 Insulated Bus Assembly Traveler (333721) per LMQXB04. Step 5.3		
	7.2	Removed Step. "Obtain parts for Bus Assembly (ME-369826) and assemble per Q2 Module Assembly Insulated Bus Assembly (ME-369826)." Moved to Q2 Insulated Bus Assembly Traveler (333721) per LMQXB04. Step 5.4		
	7.3	Removed Step. "Verify Bus Assembly (ME-369826) is assembled correctly per Q2 Module Assembly Insulated Bus Assembly (ME-369826)." Moved to Q2 Insulated Bus Assembly Traveler (333721) per LMQXB04. Step 5.5		
	7.4	Removed Step. "Hipot the 5kA Lead Bus to the 8kA and 13 kA Lead Busses on table before inserting into magnets. Power the 5kA bus to 5000V and ground the 13kA Lead Bus and the 8kA Lead Bus. **(Max. Leakage < 0.5μA).**" Moved to Q2 Bus Assembly Traveler (333721) per LMQXB04. Step 5.6		
	7.5	Removed Step. "Hipot the Corrector Magnet (MD-390312) Busses at 5kV before inserting into magnet in both the parallel and checkerboard configurations as shown below. Corrector Wires not shaded should be at high potential, while those shaded should be connected to each other and grounded. **(Max. Leakage < 0.5μA)**" Moved to Q2 Bus Assembly Traveler (333721) per LMQXB04. Step 5.7		
	7.22	Modified Step. Added a "Floating" Column Header to Table 7.22 and "RTD's and Warm-up Heaters" in that column.		
	7.23	Modified Step. Added Note. "**All wires in this table have been previously soldered to the Magnet except for the Cryogenic (warm-up) Heater Wires.**" Modified Table 7.23. Added CERN Labels per Rodger Bossert. Added Technician Signoff per LQXB04.		

Revision Page (2 of 4)

Revision	Step No.	Revision Description	TRR No.	Date
B (Continued)	7.27	Modified Step. Added "Attach Instrumentation Bus Channel Lock (MB-369937) to Q2b Non Lead End as per Q2 Module Assembly (ME-369895, page 4 of 4)"	1578 (Continued)	1/15/04
	7.30	Modified Step. Changed resistance check of RTD's and Warm-up Heaters per Rodger Bossert. New Step 7.25.		
	7.31	Modified Step. Changed hipot of RTD's and Warm-up Heaters per Rodger Bossert. New Step 7.26.		
	8.0	Modified Step. Changed electrical procedure specifications per Rodger Bossert. Added new tables with CERN Labels and new pictures.		
	11.3	Modified Step. Changed to "Install Spider Assembly (MC-430044) to protect wires." Removed checkboxes and added Responsible Authority signoff.		
	11.8	Removed Step. "Install Spider Assemblies (MC-369885) to protect wires/bus, if necessary."		
	13.0	Modified Step. Changed electrical procedure specifications per Rodger Bossert. Added new tables with CERN Labels and new pictures.		
	15.0	Modified Step. Changed electrical procedure specifications per Rodger Bossert. Added new tables with CERN Labels and new pictures.		
C	1.4	Removed Step. "All personnel performing steps in this traveler must have documented training for this traveler and associated operating procedures."	1602	4/7/04
	7.26	Modified Step. Modified table. Removed row to record Temperature of Building (+/- 5°). Not necessary for hipots.		
	7.30	Added Step. "Ensure that the MCBX Corrector Magnet (MD-390312) is against the Mount Hardware and the bolts are "snug", before leveling and rotating."		
	7.36	Added Step "Attach Voltage Tap Wires to Corrector Magnet (MD-390312) as per Q2 Module Assembly (ME-369895)."		
	10.12	Modified Step. Changed to "Hipot the Beam Tube to coil, heaters and ground. (5kV) (Max. Leakage < 0.5μA)."		
	11.14	Added Step. "Undo Clamps."		
	11.15	Added Step. "Perform a stretched wire measurement of the system to align the Cold Mass within ± .2 mR"		
D	7.23	Modified Step. Changed to "Install Warm-up Heaters (ME-369834) to the Lead Ends and Non-Lead Ends of Q2a and Q2b as per Q2 Module Assembly (ME-369895)." Per LMQXB06.	1636	7/14/04
	7.26	Modified Step. Added "Use Droege Serial No. 910 (FNAL Part No. 51330) or equivalent." Modified Tables.		
	8.1	Modified Step. Added new method of measuring Ls &Q per Rodger Bossert.		
	8.4	Modified Step. Added Responsible Authority signoff per LMQXB06.		
	9.4	Removed Step. Moved to 9.1.		
	9.10	Removed Step. Moved to new 9.6.		
	11.0	Added Note. "Ensure that a protective sleeve is placed inside the bellows between the convolutions and the bracket to prevent damage to the convolutions." per **DR No. HGQ-0423.**		
	11.3	Removed Step. "Install Spider Assembly (MC-430044) to protect wires." Per LMQXB06/Rodger Bossert.		
	11.13	Modified Step. Added "(Weld Specification ES-333781)"		
	11.14	Modified Step. Changed to "Undo the Cold Mass / Cryostat Station Support & Clamping Fixture (ME-369768)."		

Revision Page (3 of 4)

Revision	Step No.	Revision Description	TRR No.	Date
D (Continued)	13.1	Modified Step. Added new method of measuring Ls &Q per Rodger Bossert.	1636 (Continued)	7/14/04
	13.3	Modified Step. Added "Have Crew Chief verify setup and sign below before continuing."		
	13.4	Modified Step. Added Responsible Authority signoff per LMQXB06.		
	14.2	Modified Step. Added Technician Signoff per LMQXB06.		
	15.1	Modified Step. Added new method of measuring Ls &Q per Rodger Bossert.		
	15.3	Modified Step. Modified Table.		
E	5.2	Modified Step. Changed + / - 2 mm to +4 / -0 per LMQXB07.	1659	12/15/04
	7.17	Modified Step. Added "**Have Crew Chief verify setup and sign below before continuing.**" per Jim Rife.		
	8.0	Modified Electrical Inspection per Rodger Bossert.		
	8.2	Modified Step. Added Picture of Corrector Bus Leads. Modified Table.		
	10.3	Added Step. "Prepare the Beam Tube insertion area with .003" Kapton Tape."		
	13.0	Modified Electrical Inspection per Rodger Bossert.		
	13.2	Modified Step. Added Picture of Corrector Bus Leads. Modified Table.		
	15.0	Modified Electrical Inspection per Rodger Bossert.		
	15.2	Modified Step. Added Picture of Corrector Bus Leads. Modified Table.		
F	1.6	Added Step. "Protect the bellows during all stages of production." **DR No. HGQ-0500.**	1712	2/28/05
	6.11	Modified Step. Changed signoff to Responsible Authority/Physicist.		
	7.18	Modified Step. Added "Add a 20 gauge wire to the Instrumentation Wire bundle and label it as "Spare"". Per production request.		
	11.10	Modified Step. Changed signoff to Responsible Authority/Physicist.		
	13.3	Modified Step. Removed Responsible Authority signoff per production request.		
	15.0	Modified Step. Removed electrical checks that are previously performed by MTF, per production request.		
G	3.2	Added Step. "Attach Certificate of Conformity for MCBX Corrector Magnet and ensure that it is complete." per LMQXB09.	1734	10/5/05
	7.18	Modified Step. Changed to "Hipot the 5kA Lead Bus to all other components at 5 kV. Ensure that all Magnet components (*i.e. both Yokes, all Coils, RTD's, Warm-up Heaters, Strip Heaters and 8kA Bus*) are grounded. **(Max. Leakage < 3μA)**" and removed "Floating Column", per Damon Bice.		
	7.37	Removed Step. "Attach Voltage Tap Wires to Corrector Magnet (MD-390312) as per Q2 Module Assembly (ME-369895)."		
	7.37	Added Step. "Solder MCBX Corrector Magnet Voltage Tap Wires (MA-369832) to Corrector Magnet (MD-390312) as per Q2 Module Assembly (ME-369895)."		
	7.39	Removed Step. "Solder MCBX Corrector Magnet Voltage Tap Wires (MA-369832) as per Q2 Module Assembly (ME-369895)."		
	8.1	Modified Step. Modified Electrical Table. Removed "Voltage Tap Serial Numbers".		
	8.1	Modified Step. Added Nominal Resistances for the Q2a and Q2b Redundant Voltage Taps.		
	8.3	Modified Step. Modified Table. Added "SPARE" per LMQXB09.		
	10.13	Added Step. "Measure and verify Beam Tube length is 12,610 (±2mm). Record Actual Beam Tube Length below."		

Revision Page (4 of 4)

Revision	Step No.	Revision Description	TRR No.	Date
G (Continued)	11.1	Removed Step. "Reposition the IP End Dome as shown in Q2 Cold Mass Welded Assembly (ME-390309) using the Horizontal Witness Line from step 9.5." Combined it with step 11.2. (New Step 11.1)	1734 (Continued)	10/5/05
	11.5	Removed Step. "Reposition the Non-IP End Dome as shown in Q2 Cold Mass Welded Assembly (ME-390309) using the Horizontal Witness Line from step 9.11." Combined with step 11.6. (New Step 11.5)		
	11.11	Modified Step. Changed to "Mark / Layout and adjust the Shipping Restraint Nuts (MC-390294)." per Damon Bice.		
	11.12	Added Step. "Weld the Shipping Restraint Nuts (MC-390294) to the Corrector." per Damon Bice.		
	11.13	Added Step. "Install and adjust the Shipping Restraint Screws (MC-390230)." per Damon Bice.		
	12.0	Modified Steps. Modified Steps per LHC Cryostat Production Engineer.		
	12.13	Added Step. "Perform a Stretched Wire Verification Measurement." Per LMQXB08.		
	13.1	Modified Step. Added Nominal Resistances for the Q2a and Q2b Redundant Voltage Taps.		
	15.1	Modified Step. Added Nominal Resistances for the Q2a and Q2b Redundant Voltage Taps.		

Ensure appropriate memos and specific instructions are placed with the traveler before issuing the sub traveler binder to production.

1.0 General Notes

1.1 All steps that require a sign-off shall include the Technician/Technician(s)s first initial and full last name.

1.2 No erasures or white out will be permitted to any documentation. All incorrectly entered data shall be corrected by placing a single line through the error, initial and date the error before adding the correct data.

1.3 All Discrepancy Reports issued shall be recorded in the left margin next to the applicable step.

1.4 Personnel shall perform all tasks in accordance with current applicable ES&H guidelines and those specified within the step.

1.5 Cover the product/assembly with Green Herculite (Fermi stock 1740-0100) when not being serviced or assembled.

1.6 Protect the Bellows during all stages of production.

2.0 Parts Kit List

2.1 Attach the completed Parts Kit for this production operation to this traveler. Ensure that the serial number on the Parts Kit matches the serial number of this traveler. Verify that the Parts Kit received is complete.

J. Systat
Process Engineering/Designee

10/6/05
Date

3.0 Q2 Module Alignment

3.1 Record the serial number for each Magnetic Component Assembly.

Q2a Serial Number: MQXB 19

Q2b Serial Number: MQXB 18

MCBX Serial Number: MCBX_001-S1000034

STOP

Responsible Authority/Physicist 10/6/05
Date

STOP

3.2 Attach Certificate of Conformity for MCBX Corrector Magnet and ensure that it is complete.

Crew Chief 10-6-05
Date

3.3 File the End Plate Welds, and Alignment Welds at the Non-Lead End of Coldmass Q2a to allow Center Body Tube (MC-390112) to fit properly.

Technician(s) 10-6-05
Date

4.0 Q2a Magnet Placement (Module Assembly Tooling)

4.1 Configure tooling for Q2a/Q2b Cold Mass assembly per (ME-369768).

Technician(s) _____ Date 10/6/05

4.2 Configure tooling for Corrector Mounting per (ME-369780), 13.780 Diameter Corrector Magnet.

Technician(s) _____ Date _____

4.3 Configure tooling for End Dome Mounting per (ME-369765, View F-F) (Insert Item 22).

Technician(s) _____ Date 10/6/05

4.4 Move the Q2a Cold Mass to the Cold Mass Module Assembly Tooling, placing it nearest the East End of ICB, with the Lead End of the Magnet facing East as per Q2 Cold Mass Welded Assembly (ME-390309).

Technician(s) _____ Date 10-6-05

4.5 Rotate the Q2a Cold Mass, such that the Weld Keys are approximately at a 45° diagonal.

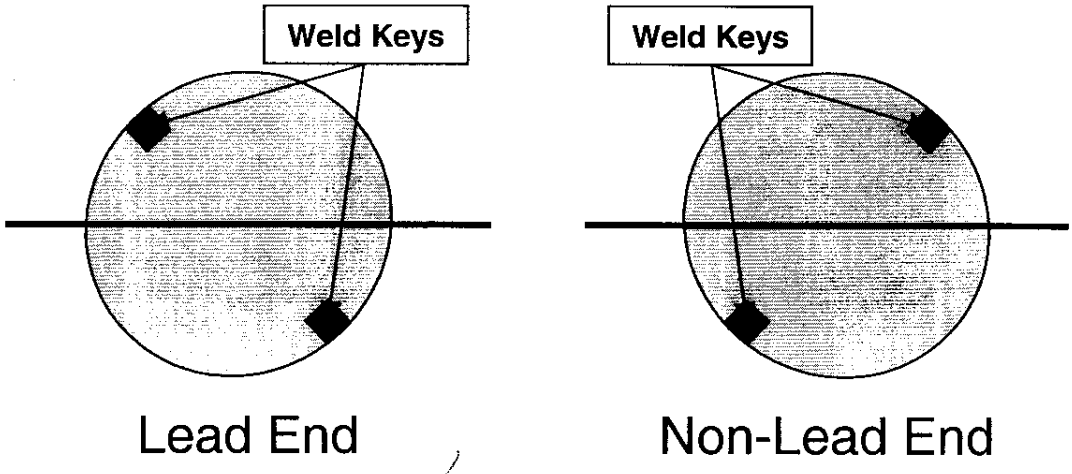

Technician(s) _____ Date 10-6-05

4.6 Slide the Center Body Tube (MC-390112) over Return End of Q2a Coldmass as per Q2 Cold Mass Welded Assembly (ME-390309).

Technician(s) _____ Date 10-6-05

5.0 Q2b Magnet Placement (Module Assembly Tooling)

5.1 Move the Q2b Cold Mass to the Cold Mass Module Assembly Tooling, placing it nearest the West End of ICB, with the Lead End of the Magnet Facing West as per Q2 Cold Mass Welded Assembly (ME-390309).

Technician(s) _____ Date 10-6-05

5.2 Position the Cold Masses so that the distance from the magnetic center of Q2a Cold Mass to the magnetic center of Q2b Cold Mass as denoted by the markings on the OD of the Cold Mass is 6524mm +4 /- 0 mm

Note(s):

Needs to be the warm magnetic offset 6519.6 mm, plus 3/16" (4.4mm) allowance for weld shrinkage.

Technician(s) _____ Date 10-6-05

5.3 Rotate the Q2b Cold Mass such that the Weld Keys are approximately at a 45° diagonal.

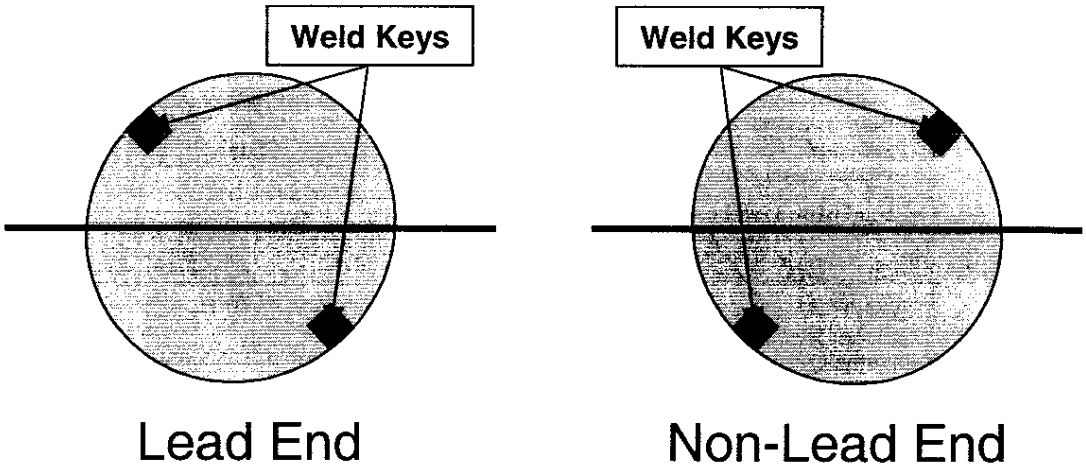

Technician(s) _____ Date 10-6-05

6.0 Q2a / Q2b Module Alignment

Q2a

6.1 Determine and record the location at which the level gauge should be mounted to the Cold Mass.

Distance from Lead End Plate: 70 inches.

Top page

T. Pm — Responsible Authority/Physicist — 10/6/05 Date

6.2 Mount the Twist Measuring Fixture to the Q2a Cold Mass at the assigned position.

D Murphy / O. Fra — Technician(s) — 10-6-05 Date

6.3 Mount the Precision V Block to the top of the Twist Measuring Fixture.

D Murphy / O. Fra — Technician(s) — 10-6-05 Date

6.4 Place the Mini Level on the top surface of the V Block.

D Murphy / O. Fra — Technician(s) — 10-6-05 Date

6.5 Rotate the Q2a Cold Mass until the Mini Level reads Horizontal 0.00 mm/m (+/- 0.05 mm/m).

Note(s):

Mini Level should be "zeroed" at reference stand location before this operation.

D Murphy / O Fra — Technician(s) — 10-6-05 Date

Q2b

6.6 Determine and record the location at which the level gauge should be mounted to the Q2b Cold Mass.

Distance from Lead End Plate: 60 inches.

STOP

T. Pm — 10/4/05

Responsible Authority/Physicist — Date

6.7 Mount the Twist Measuring Fixture to the Q2b Cold Mass at the assigned position.

Technician(s) — 10-6-05 Date

6.8 Mount the Precision V Block to the top of the Twist Measuring Fixture.

Technician(s) — 10-6-05 Date

6.9 Place the Mini Level on the top surface of the V Block.

Technician(s) — 10-6-05 Date

6.10 Rotate the Q2b Cold Mass until the Mini Level reads Horizontal 0.00mm/m (+/- 0.05 mm/m).

Note(s):

Mini Level should be "zeroed" at reference stand location before this operation.

Technician(s) — 10-6-05 Date

6.11 Perform a Stretched Wire Verification Measurement.

STOP

10/9/05

Responsible Authority/Physicist — Date

7.0 Bus & Instrumentation Connection and Assembly

Note(s):

Figure "7.0-A" shows the configuration of magnet and corrector bus leads in a Q2 Magnet.

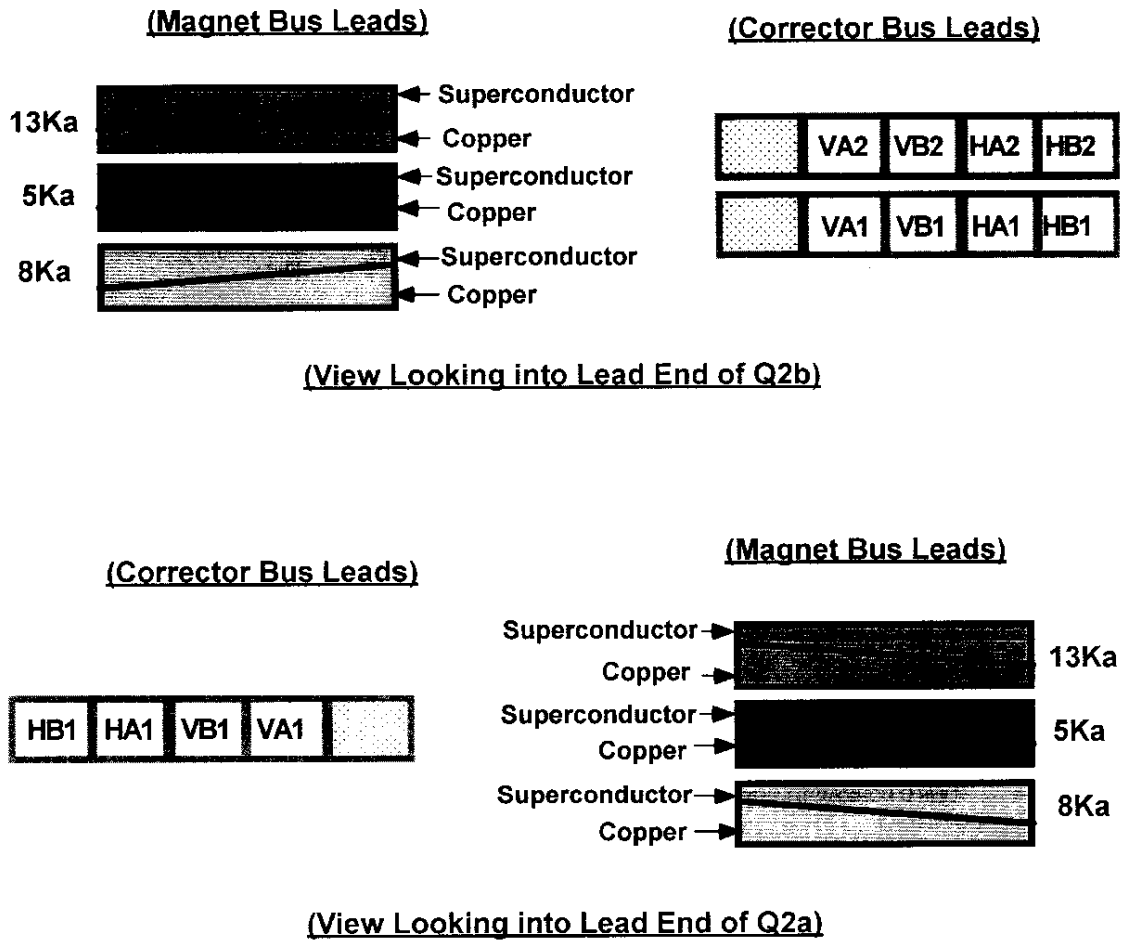

Figure 7.0-A

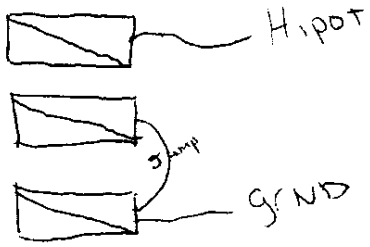

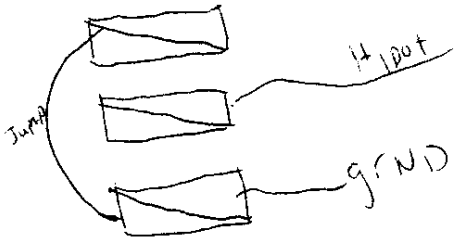

67 nA

5 KV ~~10~~ 25 V/S

32 nA

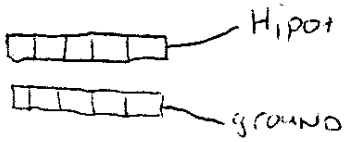

4KV
100V/S

13 nA

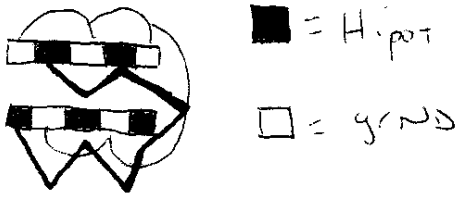

105 μA

7.1 Slide Completed Bus Assembly (ME-369826) into Q2 as per Q2 Module Assembly (ME-369895).

Technician(s) _____ Date 10-13-05

7.2 Connect the Bus Housing Lock (MB-369870) to the Bus Assembly (ME-369826) and Q2b Return End Plate as per Q2 Module Assembly (ME-369895).

Technician(s) _____ Date 10-13-05

7.3 Connect the Bus Housing End Support (MB-369892) on the Q2a End per (ME-369895).

Technician(s) _____ Date 10/14/05

7.4 Connect the Bus Housing End Support (MB-369892) on the Q2b End per (ME-369895).

Technician(s) _____ Date 10/14/05

7.5 Set up the Power Leads for splicing. Create a ¾" space behind the Kevlar wrapped Leads to allow for Thermal Contraction differences between the bus and Cold Masses

Technician(s) _____ Date 10-14-05

7.6 Solder 13kA bus to Q2a Quadrant 4 lead as per Q2 Module Assembly (ME-369895) per LHC Cable Splice Joint Procedure (ES-369950).

Technician(s) _____ Date 10-14-05

7.7 Cut Q2a Quadrant 4 Lead at end of splice per Drawing (ME-369895).

Technician(s) _____ Date 10/14/05

7.8 Insulate splice area with ¾ overlap, .001 x 3/8 wide kapton.

Technician(s) _____ Date 10/14/05

7.9 Attach the Q2a Bus Housing Extension (MD-369872) to Q2a Lead as per Q2 Module Assembly (ME-369895).

Technician(s) _____ Date 10/15/05

7.10 Attach the Q2a Bus Housing Extension Base (MC-369873) to Q2a Lead as per Q2 Module Assembly (ME-369895).

Technician(s) _____ Date 10/15/05

7.11 Attach the Q2a Bus Housing Extension Cover (MD-369874) to Q2a Lead as per Q2 Module Assembly (ME-369895).

Technician(s) _____ Date 10/15/05

7.12 Solder 13kA bus to Q2b Quadrant 4 lead as per Q2 Module Assembly (ME-369895) as per LHC Cable Splice Joint Procedure (ES-369950).

Technician(s) _____ Date 10-14-05

IN this case, Lower bus was cut, Q4 lead kept.

7.13 Cut Q2b Quadrant 4 Lead at end of splice per Drawing (ME-369895).

Technician(s) _____ Date 10-18-05

7.14 Insulate splice area with ¾ overlap, .001 x 3/8 wide kapton.

Technician(s) _____ Date 10-18-05

7.15 Attach the Q2b Bus Housing Extension (MD-369867) to Q2b Lead as per Q2 Module Assembly (ME-369895).

Technician(s) _____ Date 10-18-05

7.16 Verify that there is a ¾" clearance between the Bus Housing Extension Cover and the End Plate. If not, modify extension cover to allow clearance.

Crew Chief _____ Date 10-18-05

7.17 Attach the Q2b Bus Housing Extension Cover (MD-369874) to Q2b Lead as per Q2 Module Assembly (ME-369895).

Technician(s) _____ Date 10-19-05

7.18 Hipot the 5kA Lead Bus to all other components at 5 kV. Ensure that all Magnet components (*i.e. both Yokes, all Coils, RTD's, Warm-up Heaters, Strip Heaters and 8kA Bus*) are grounded. **(Max. Leakage < 3μA)**

(Magnet Bus Leads)

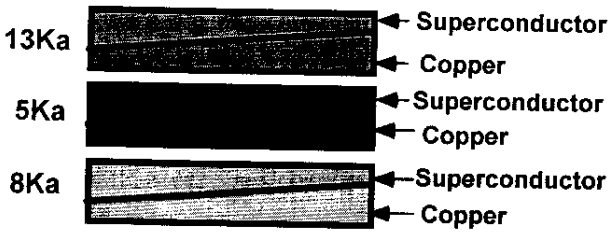

(Corrector Bus Leads)

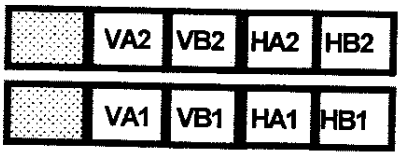

(View Looking into Q2b)

STOP

Have Crew Chief verify setup and sign below before continuing.

Crew Chief _____ Date 10-19-05

Power Lead Assembly Hipot	Leakage or Failure Voltage	Pass	Fail
5kA to all other components	~~[illegible]~~ 212 nA	✓	

Technician(s) _____ Date 10/19/05

STOP

Responsible Authority/Physicist _____ Date 19-OCT-2005

DR 4302

7.19 Prepare Q2a Lead End Instrumentation wire bundle. Wrap the Q2a Lead End instrumentation wires into Bus Cable as per (MB-369897). Add a 20 gauge wire to the Instrumentation Wire bundle and label it as "Spare". Wire Labels and descriptions are shown in Table 7.19 and per (MB-369897).

Note(s):

All wires in this table have been previously soldered to the Magnet except for the Cryogenic (warm-up) Heater Wires.

Q2a bundle MB-369897 (From Lead End of Q2a)				
Wire Description	**Fermi Label**	**CERN Label**	**Gauge**	
Q2a Lead Voltage Tap "a", primary	VTa1Q2a	EE1112	26	Twist all three together
Q2a Lead Voltage Tap "b", primary	VTb1Q2a	EE1312	26	
Q2a Center Voltage Tap "c", primary	VTc1Q2a	EE1212	26	
Q2a lead Voltage Tap "a", redundant	VTa2Q2a	EE1122	26	Twist all three together
Q2a Lead Voltage Tap "b", redundant	VTb2Q2a	EE1322	26	
Q2a Center Voltage Tap "c", redundant	VTc2Q2a	EE1222	26	
1/4 coil tap (Q1 inner - Q3 outer)	VTdQ2a	EMPTY	26	
1/4 coil tap (Q2 inner - Q4 outer)	VTeQ2a	EMPTY	26	
SPARE WIRE	SPARE	SPARE	20	
Q2A Cryogenic Heater lead end - wire toward cold mass end plate (CERN #11+)	W1aQ2A	EH8312+	20	Install and Twist Together
Q2A Cryogenic Heater lead end - wire toward cold mass mag center (CERN #11-)	W2aQ2A	EH8312-	20	
Q2a Protection (Strip) Heater, 1-4 & 2-3 circuit (FNAL lead A+) (CERN lead #1+)	H1aQ2a	YT1112+	20	Twist together
Q2a Protection (Strip) Heater, 1-4 & 2-3 circuit (FNAL lead A-) (CERN lead #1-)	H2aQ2a	YT1112-	20	
Q2a Protection (Strip) Heater, 1-2 & 3-4 circuit (FNAL lead B+) (CERN lead #2+)	H1bQ2a	YT1122+	20	Twist together
Q2a Protection (Strip) Heater, 1-2 & 3-4 circuit (FNAL lead B-) (CERN lead #2-)	H2bQ2a	YT1122-	20	

Table 7.19

Technician(s) _____ Date 10.14.05

7.20 Pull wire bundle from Q2a through entire Q2 Assembly and mark the Q2b Lead End Plate position on bundle. **(See Note below)** Leave sufficient slack in cable to allow for differential thermal contraction.

Note(s):

When Bus Assembly (ME-369896) is inserted into the Q2 in step 7.27, the mark from step 7.24 should be located 1 inch from the Q2b end of the aluminum channel.

Technician(s) _____ Date 10-14-05

7.21 Verify that there is sufficient slack in cable to allow for differential thermal contraction.

Roger

Responsible Authority/Physicist _____ Date 10/14/05

7.22 Remove Q2a bundle from Q2 Assembly.

Technician(s) _____ Date 10-14-05

7.23 Slide Instrumentation Bus Assembly (ME-369896) into the proper Q2 Port as per Q2 Module Assembly (ME-369895). As instrumentation Bus Assembly is being inserted, feed Bus Cable (MA-369897) from Lead End of Q2a (4 strip heater wires, 8 voltage tap wires and 2 warm-up heater wires) into bus channel, wrapping entire channel intermittently with glass tape and Kevlar string as shown in drawing (ME-369896). Attach Instrumentation Bus Channel Lock (MB-369937) to Q2b Non Lead End as per Q2 Module Assembly (ME-369895, page 4 of 4).

Refer to Figures 7.23-A, 7.23-B, 7.23-C, 7.23-D and Drawing (ME-369895) to see the positions at which all wires are attached to the End Plates.

Technician(s) _____ Date 10-14-05

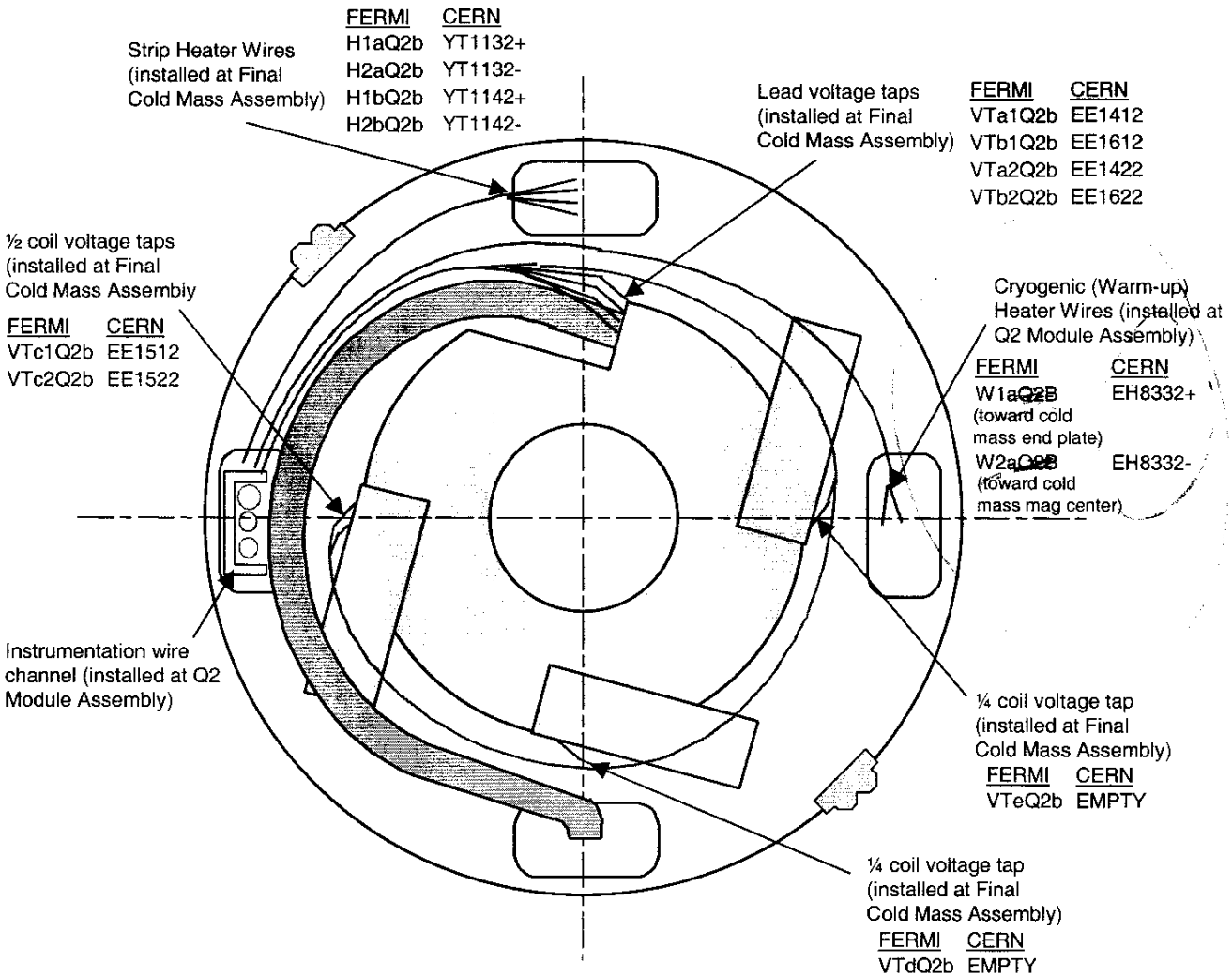

Looking at Lead End of Q2b

Figure 7.23-A

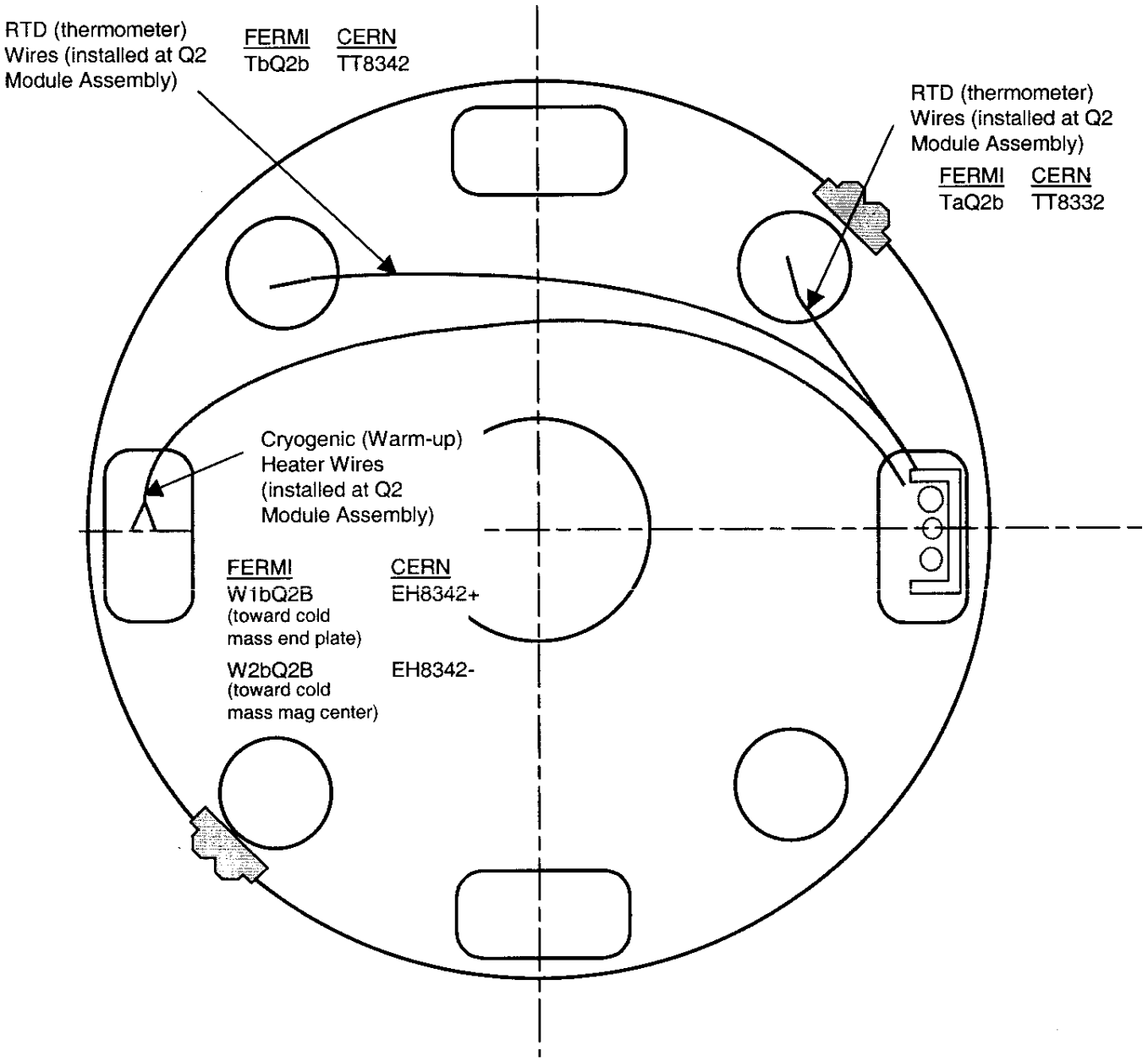

Looking at Non-lead End of Q2b

Figure 7.23-B

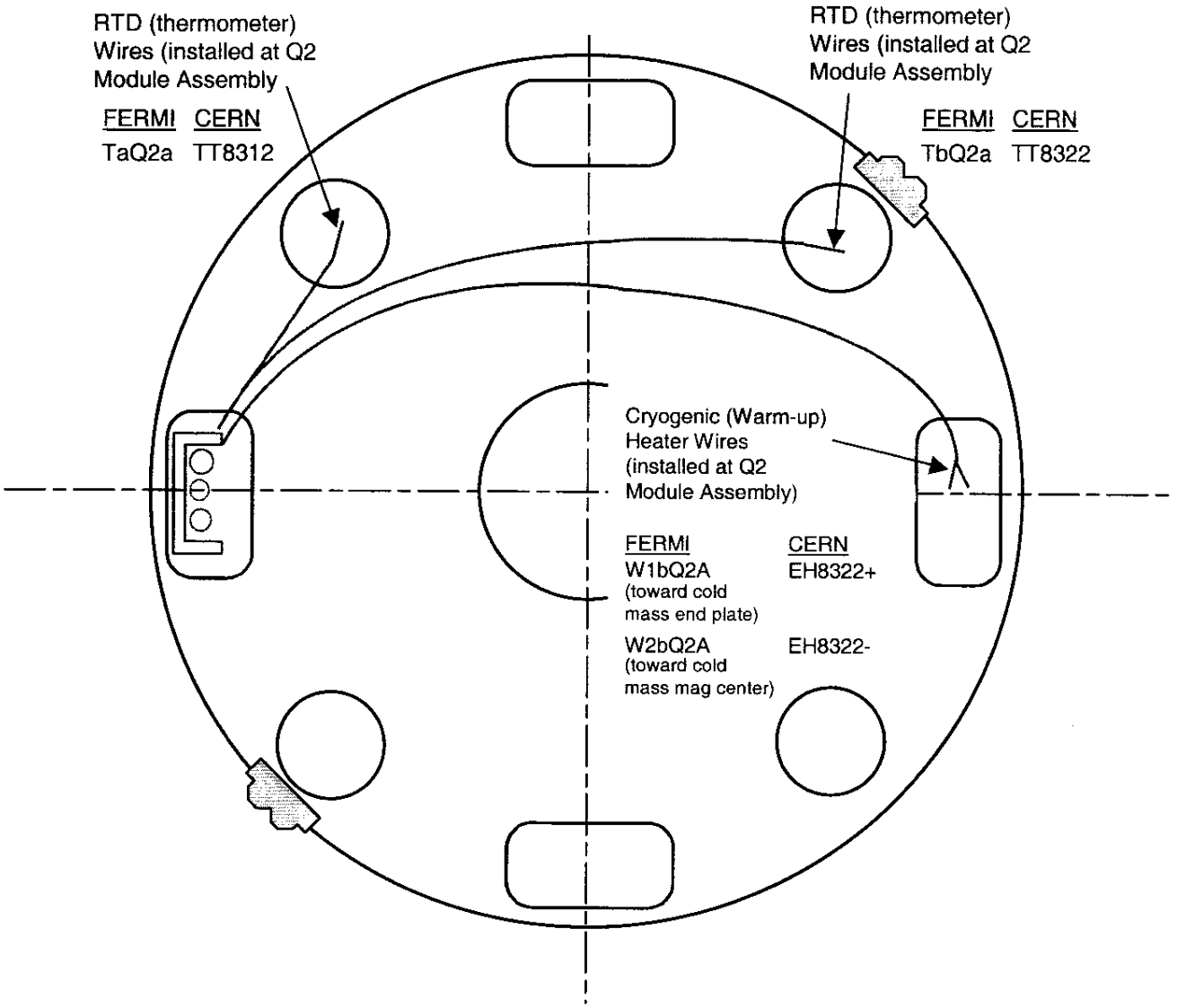

Looking at Non-lead End of Q2a

Figure 7.23-C

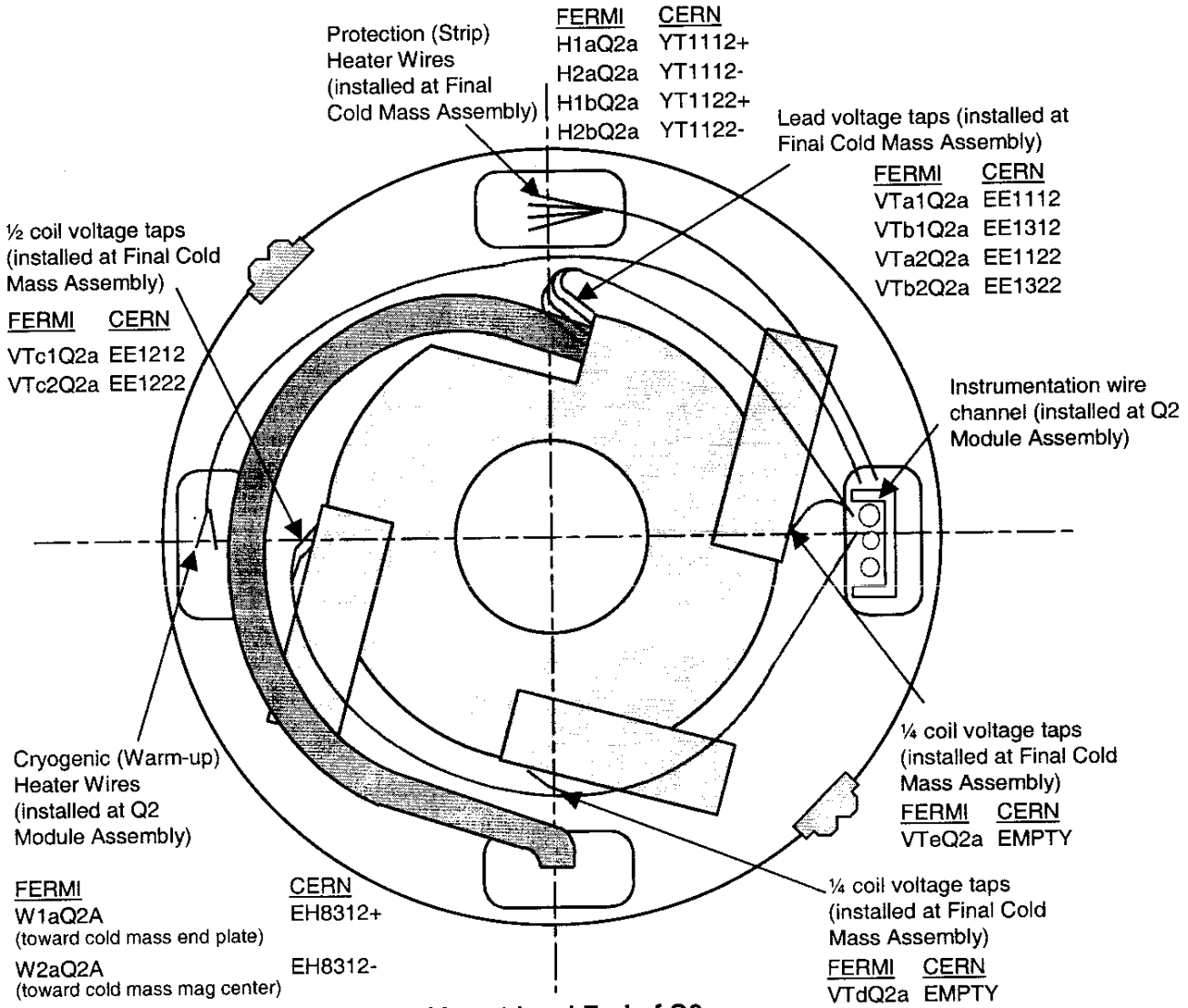

Looking at Lead End of Q2a

Figure 7.23-D

7.24 Install Warm-up Heaters (ME-369834) to the Lead Ends and Non-Lead Ends of Q2a and Q2b as per Q2 Module Assembly (ME-369895).

7.24.1 Install Warm-up Heaters (MA-369834) onto the Warm-up Heater Base Plate (MA-369829).

7.24.2 Solder wires (MA-369833) to the Warm-up Heaters as per (ME-369895).

7.24.3 Install Warm-up Heater Base Plates (MA-369829) by bolting into holes in End Plate. (Check each box as Heater is installed.)

Warm-up Heater #1 ☑

Warm-up Heater #2 ☑

Warm-up Heater #3 ☑

Warm-up Heater #4 ☑

Technician(s) _____ Date _____

7.25 Position the RTD Blocks as per Q2 Module Assembly (ME-369895).

Technician(s) _____ Date _____

7.26 Weld the RTD Blocks as per Q2 Module Assembly (ME-369895).

Weldor(s) _____ Date 10/19/05

7.27 Install RTD's as per Q2 Module Assembly (ME-369895). Attach Data Sheet for each RTD to traveler.

7.27.1 Attach RTD's (MA-369835) (Qty. 2) to each Return End Plate as per Q2 Module Assembly (ME-369895).

7.27.2 Solder wires (MA-369836) to RTD's as per Q2 Module Assembly (ME-369895). Individual RTD wiring is shown in Figure 7.25.2-A below.

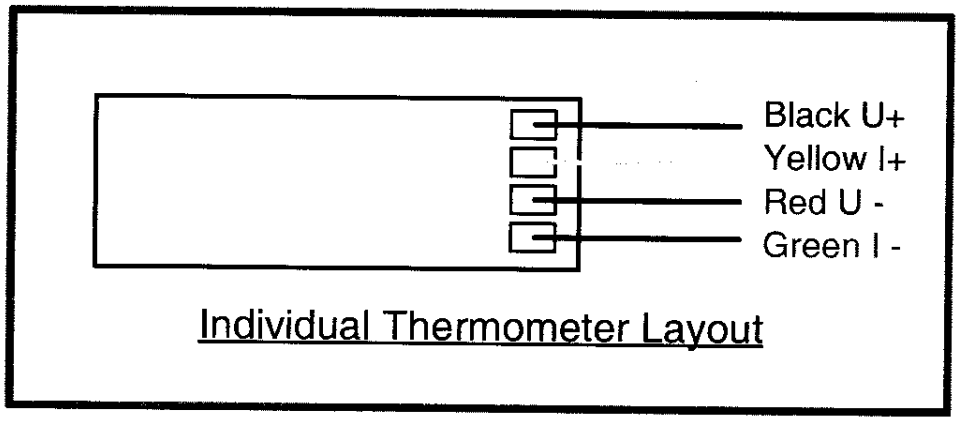

Figure 7.27.2-A

Technician(s) _____ Date 10/20/05

7.28 Measure Resistance of all RTD's and Cryogenic (warm-up) Heaters. Record the Data below.

To measure the resistance of a Thermometer (RTD):

1. Use Hewlett Packard HP3457A digital multimeter.
2. Record temperature of building within +/- 5 degrees.
3. Press line button to turn line on.
4. Connect wires as shown in Figure below.
   U+ (Black) to Sense HI
   I+ (Yellow) to Input HI
   U- (Red) to Sense LO
   I- (Green) to Input LO
5. Push blue button (function key) once.
6. Push OHMF button.
7. Verify arrow in readout is above the 4WΩ (meaning a 4 wire resistance measurement).
8. Read resistance in ohms and record in traveler.

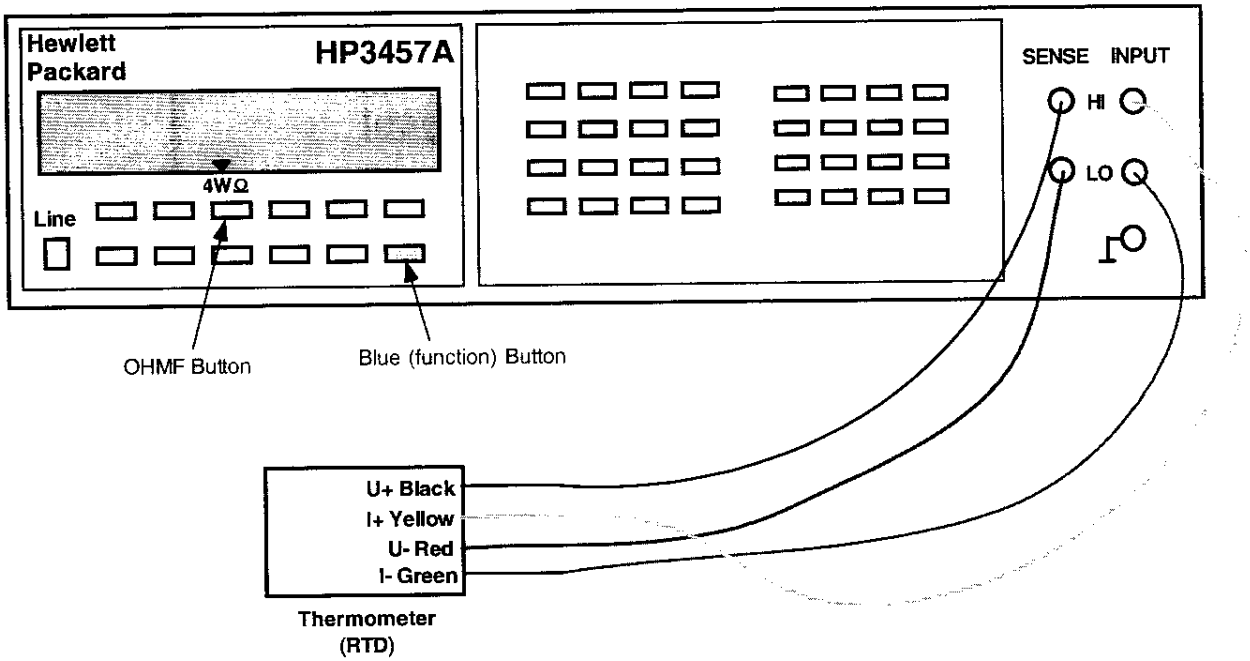

RTD's					
Temperature of Building (+/- 5°): 71° F					
Serial No.	Location	Fermi	CERN	Measured Ω	Mfr. Resistance (Expedition)
X 17261	Q2a Inst. Bus Side	TaQ2a	TT8312	65.74 Ω	63.675 Ω
X 17278	Q2a Non-Bus Side	TbQ2a	TT8322	65.94 Ω	63.319 Ω
X 17280	Q2b Inst. Bus Side	TaQ2b	TT8332	64.77 Ω	62.595 Ω
X 17158	Q2b Non-Bus Side	TbQ2b	TT8342	70.47 Ω	68.581 Ω

CQXB 10

Cryogenic Thermometer Traveller

DESCRIPTION

Part description:	Cryogenic thermometer	**Top Assembly Identification:**	X17280
Part Identification:	HCQITESCXT-CR013810	**Manufactured By:**	Fermilab
Serial Number:	CX_LS_X17280		

CABLING

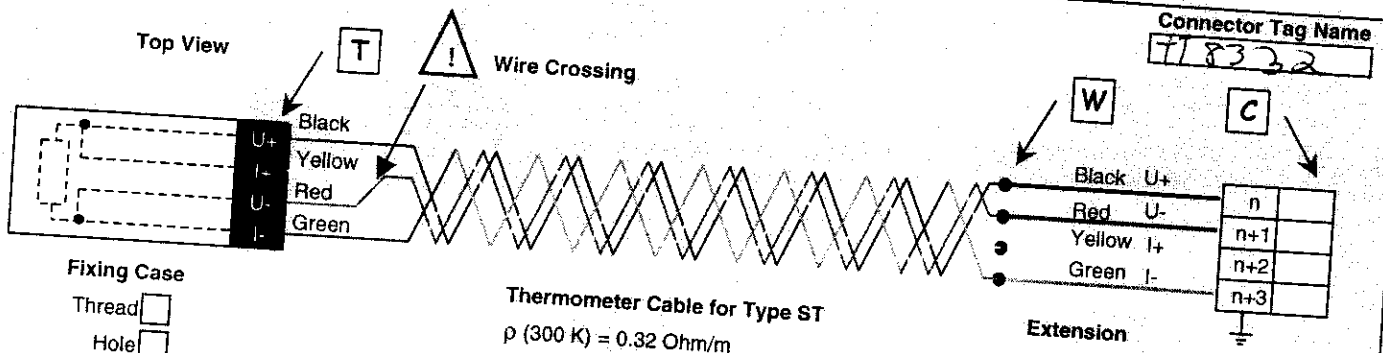

Fixing Case

Thread ☐
Hole ☐
Stud ☐

Thermometer Cable for Type ST

ρ (300 K) = 0.32 Ohm/m
Copper AWG 30
Length = ☐ m

Extension

ρ (300 K) = 0.07 Ohm/m
Copper AWG 24
Length: 0.8 m

CHECKS

Intervention	Date/ DD-MMM-YYYY	Check Point	R(U+,U-,I+,I-) [Ohm] 4W	R(U-,I-) [Ohm] 2W	R(U+,I+) [Ohm] 2W	R(U+,GND) [Ohm] 2W	Temperature [K]	Firm/Laboratory	Checked by
Calibration	04-Feb-2002	T	64.34	n.a	n.a	OVL	Ambient	IPN	Joly
Expedition	12-Mar-2003	T	62.595	0.1	0.1	OVL	293	CERN	Grivat
Reception	19-OCT-2005	T W C	64.77				71°F	Fermi	O. Franceza
		T W C							
		T W C							
		T W C							
		T W C							
		T W C							
		T W C							
		T W C							
		T W C							
		T W C							
		T W C							
		T W C							
		T W C							
		T W C							
		T W C							
		T W C							
		T W C							
		T W C							
		T W C							
		T W C							
		T W C							
		T W C							
		T W C							
		T W C							

In Case of problem, do not hesitate to contact P...

LQX8 10

Cryogenic Thermometer Traveller

DESCRIPTION

Part description:	Cryogenic thermometer	**Top Assembly Identification:**	X17188
Part Identification:	HCQITESCXT-CR013320	**Manufactured By:**	Fermilab
Serial Number:	CX_LS_X17188		

CABLING

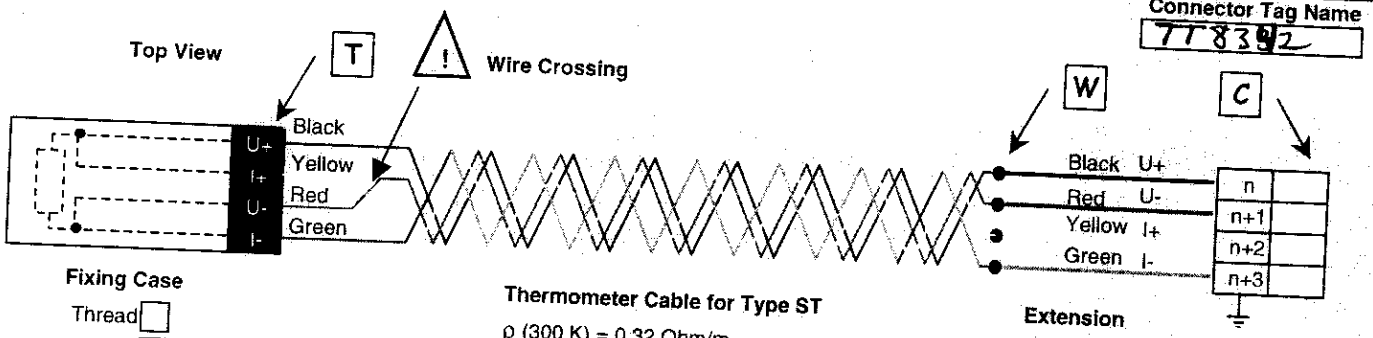

Fixing Case

Thread ☐
Hole ☐
Stud ☐

Thermometer Cable for Type ST

ρ (300 K) = 0.32 Ohm/m
Copper AWG 30
Length = ☐ m

Extension

ρ (300 K) = 0.07 Ohm/m
Copper AWG 24
Length: 0.8 m

CHECKS

Intervention	Date/ DD-MMM-YYYY	Check Point	R(U+,U-,I+,I-) [Ohm] 4W	R(U-,I-) [Ohm] 2W	R(U+,I+) [Ohm] 2W	R(U+,GND) [Ohm] 2W	Temperature [K]	Firm/Laboratory	Checked by
Calibration	04-Feb-2002	T	69.98	n.a	n.a	OVL	Ambient	IPN	Joly
Expedition	12-Mar-2003	T	68.581	0.1	0.1	OVL	293	CERN	Grivat
Reception	19 OCT 2005	T W C	70.47	-	-	-	71°F	Fermi	C Francis
		T W C							
		T W C							
		T W C							
		T W C							
		T W C							
		T W C							
		T W C							
		T W C							
		T W C							
		T W C							
		T W C							
		T W C							
		T W C							
		T W C							
		T W C							
		T W C							
		T W C							
		T W C							
		T W C							
		T W C							
		T W C							
		T W C							
		T W C							

In Case of problem, do not hesitate to contact Responsible person at CERN

CQXB-10

Cryogenic Thermometer Traveller

DESCRIPTION

Part description:	Cryogenic thermometer	**Top Assembly Identification:**	X17261
Part Identification:	HCQITESCXT-CR013740	**Manufactured By:**	Fermilab
Serial Number:	CX_LS_X17261		

CABLING

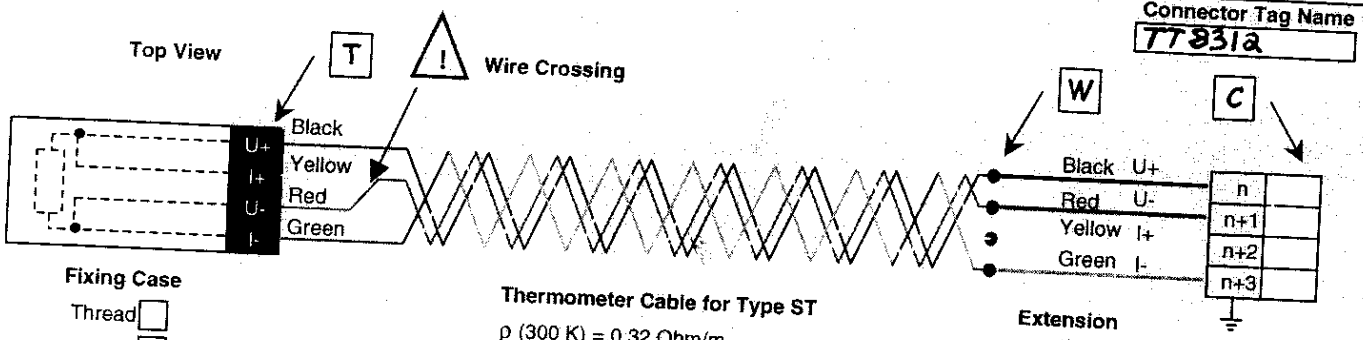

Fixing Case

Thread ☐
Hole ☐
Stud ☐

Thermometer Cable for Type ST

ρ (300 K) = 0.32 Ohm/m
Copper AWG 30
Length = ☐ m

Extension

ρ (300 K) = 0.07 Ohm/m
Copper AWG 24
Length: 0.8 m

CHECKS

Intervention	Date/ DD-MMM-YYYY	Check Point	R(U+,U-,I+,I-) [Ohm] 4W	R(U-,I-) [Ohm] 2W	R(U+,I+) [Ohm] 2W	R(U+,GND) [Ohm] 2W	Temperature [K]	Firm/Laboratory	Checked by
Calibration	04-Feb-2002	T	65.57	n.a	n.a	OVL	Ambient	IPN	Joly
Expedition	12-Mar-2003	T	63.675	0.1	0.1	OVL	293	CERN	Grivat
Reception	19-OCT-2005	T W C	65.74	-	-		71°F	Fermi	O. Franzen
		T W C							
		T W C							
		T W C							
		T W C							
		T W C							
		T W C							
		T W C							
		T W C							
		T W C							
		T W C							
		T W C							
		T W C							
		T W C							
		T W C							
		T W C							
		T W C							
		T W C							
		T W C							
		T W C							
		T W C							
		T W C							
		T W C							
		T W C							

In Case of problem, do not hesitate to contact D

LQXB-10

Cryogenic Thermometer Traveller

DESCRIPTION

Part description:	Cryogenic thermometer	**Top Assembly Identification:**	X17278
Part Identification:	HCQITESCXT-CR013790	**Manufactured By:**	Fermilab
Serial Number:	CX_LS_X17278		

CABLING

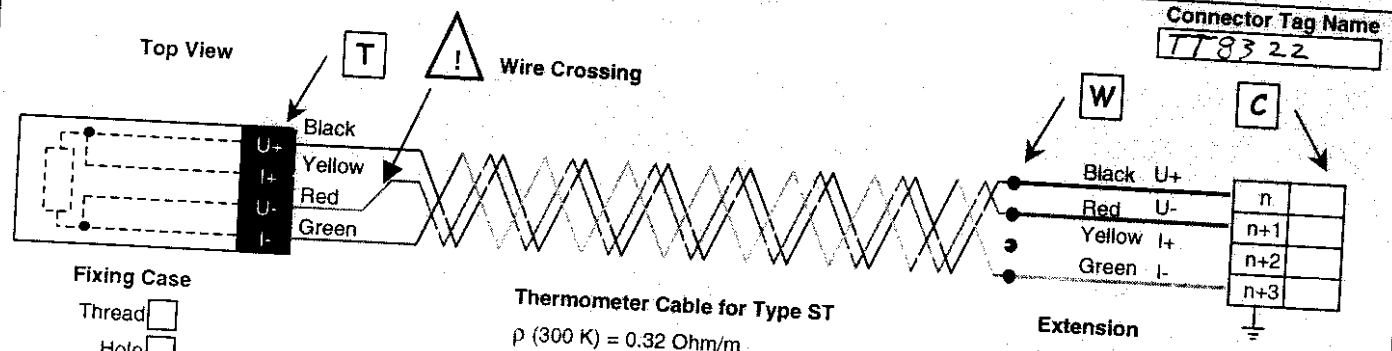

Fixing Case

Thread ☐
Hole ☐
Stud ☐

Thermometer Cable for Type ST

ρ (300 K) = 0.32 Ohm/m
Copper AWG 30
Length = ☐ m

Extension

ρ (300 K) = 0.07 Ohm/m
Copper AWG 24
Length: 0.8 m

CHECKS

intervention	Date/ DD-MMM-YYYY	Check Point	R(U+,U-,I+,I-) [Ohm] 4W	R(U-,I-) [Ohm] 2W	R(U+,I+) [Ohm] 2W	R(U+,GND) [Ohm] 2W	Temperature [K]	Firm/Laboratory	Checked by
Calibration	04-Feb-2002	T	65.68	n.a	n.a	OVL	Ambient	IPN	Joly
Expedition	12-Mar-2003	T	63.319	0.1	0.1	OVL	293	CERN	Grivat
Reception	11 OCT 2005	T W C	65.94				71°F	Fermi	O Franeza
		T W C							
		T W C							
		T W C							
		T W C							
		T W C							
		T W C							
		T W C							
		T W C							
		T W C							
		T W C							
		T W C							
		T W C							
		T W C							
		T W C							
		T W C							
		T W C							
		T W C							
		T W C							
		T W C							
		T W C							
		T W C							
		T W C							

In Case of problem, do not hesitate to contact R...

To measure the resistance of a Cryogenic (warm-up) Heater

1. Use Hewlett Packard HP3457A digital multimeter.
2. Record temperature of building within +/- 5 degrees.
3. Press line button to turn line on.
4. Connect wires as shown in Figure below.
5. Push blue button (function key) once.
6. Push OHMF button.
7. Verify arrow in readout is above the 4WΩ (meaning a 4 wire resistance measurement).
   Note: Although this is technically a 4 wire measurement, it is effectively a 2 wire measurement, since there are only 2 wires connected to each heater.
8. Read resistance in ohms and record in traveler.

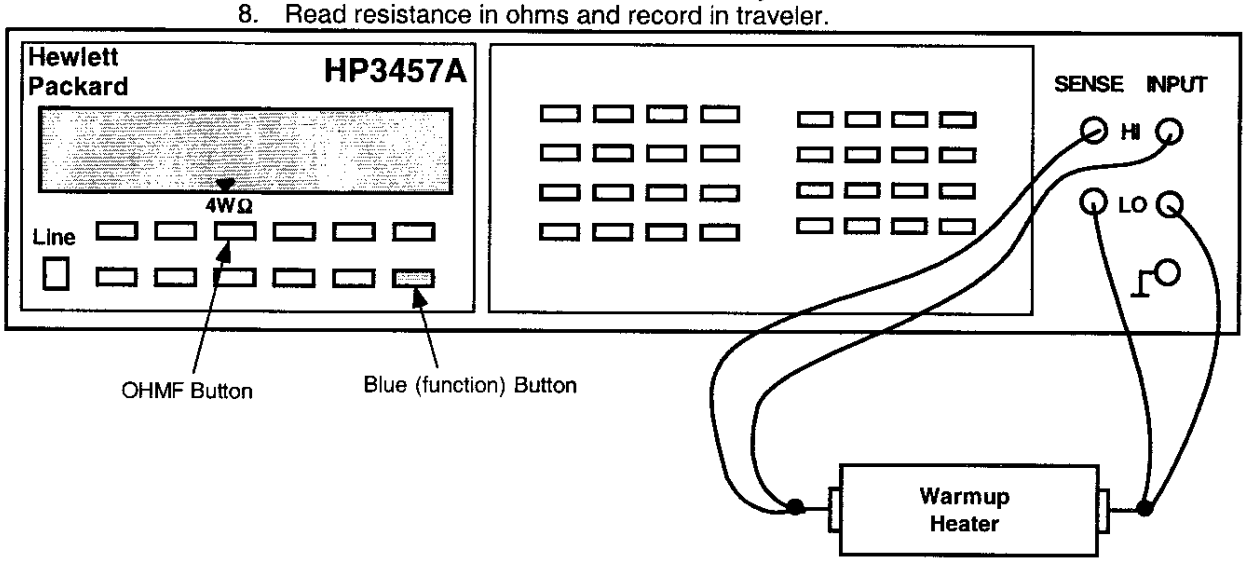

Cryogenic (warm-up) Heaters			
Temperature of Building (+/- 5°): 71°F			
Location	**Fermi**	**CERN**	**Measured Ω**
Q2a Lead End	W1aQ2A	EH8312+	16.91 Ω
	W2aQ2A	EH8312-	
Q2a Non-Lead End	W1bQ2A	EH8322+	16.52 Ω
	W2bQ2A	EH8322-	
Q2b Lead End	W1aQ2B	EH8332+	16.20 Ω
	W2aQ2B	EH8332-	
Q2b Non-Lead End	W1bQ2B	EH8342+	16.47 Ω
	W2bQ2B	EH8342-	

O. Fuiano
Technician(s)

10.19.05
Date

7.29 Hipot Cryogenic (warm-up) Heaters (300 V) to ground. (Max Leakage < 0.1 μA) Use Droege Serial No. 910 (FNAL Part No. 51330) or equivalent.

STOP

Have Crew Chief verify setup and sign below before continuing.

Crew Chief _____ Date 10-19-05

Cryogenic (warm-up) Heaters			
Temperature of Building (+/- 5°): 71°			
Location	**Fermi**	**CERN**	**Max. Leakage < 0.1 μA**
Q2a Lead End	W1aQ2A	EH8312+	< .1 μA
	W2aQ2A	EH8312-	
Q2a Non-Lead End	W1bQ2A	EH8322+	.1 μA
	W2bQ2A	EH8322-	
Q2b Lead End	W1aQ2B	EH8332+	< .1 μA
	W2aQ2B	EH8332-	
Q2b Non-Lead End	W1bQ2B	EH8342+	< .1 μA
	W2bQ2B	EH8342-	

Hipot RTD's (100 V) to ground. (Max Leakage < 0.1 μA) Use Droege Serial No. 910 (FNAL Part No. 51330) or equivalent.

STOP

Have Crew Chief verify setup and sign below before continuing.

Crew Chief _____ Date 10-19-05

RTD's				
Serial No.	**Location**	**Fermi**	**CERN**	**Max. Leakage < 0.1 μA**
X 17261	Q2a Inst. Bus Side	TaQ2a	TT8312	< 0.1 μA
X 17278	Q2a Non-Bus Side	TbQ2a	TT8322	< 0.1 μA
X 17280	Q2b Inst. Bus Side	TaQ2b	TT8332	< .1 μA
X 17188	Q2b Non-Bus Side	TbQ2b	TT8342	< 0.1 μA

Technician(s) _____ Date 10·19·05

7.30 Install the mounts for the MCBX Corrector Magnet (MD-390312) on the Return End of Q2a as per Q2 Cold Mass Welded Assembly (ME-390309).

Technician(s) _____ Date 10-21-05

7.31 Place the MCBX Corrector Magnet (MD-390312) in the Corrector Magnet Mounting Tooling, between Q2a and Q2b. The Flange end of the MCBX should face the Return End Plate of Q2a.

Technician(s) _____ Date 10-21-05

7.32 Attach the MCBX Corrector Magnet Alignment Tooling (ME-390390) to the MCBX Corrector Magnet (MD-390312). Align the Scribe Lines on the Corrector Magnet (MD-390312) with those on the tooling.

Technician(s) _____ Date 10-21-05

7.33 Ensure that the MCBX Corrector Magnet (MD-390312) is against the Mount Hardware and the bolts are "snug", before leveling and rotating.

STOP

Crew Chief _____ Date 10/21/05

7.34 Mount the Mini Level to the top of the MCBX Corrector Magnet Alignment Tooling.

Note(s):

Mini Level should be "zeroed" at reference stand location before this operation.

Technician(s) _____ Date 10-21-05

7.35 Rotate the MCBX Corrector Magnet (MD-390312) such that the Mini Level is Horizontal 0.00 mm/m (+/- 0.05 mm/m).

Technician(s) _____ Date 10-21-05

7.36 Move the MCBX Corrector Magnet (MD-390312) up against the Mounting Hardware to the Q2a Magnet, and bolt the MCBX Corrector Magnet (MD-390312) to the Q2a Cold Mass as per Q2 Cold Mass Welded Assembly (ME-390309). Shim and torque, as needed, while monitoring levels.

Technician(s) _____ Date 10-21-05

7.37 Verify Alignment of MCBX Corrector Magnet (MD-390312) as per Q2 Cold Mass Welded Assembly (ME-390309).

Top Page

Responsible Authority/Physicist _____ Date 10/22/05

7.38 Connect the MCBX Corrector Magnet (MD-390312) Bus wires from Bus Assembly (ME-369826) to the MCBX Corrector Magnet (MD-390312) as per Q2 Module Assembly (ME-369895).

Technician(s) _____ Date 10-22-05

7.39 Solder MCBX Corrector Magnet Voltage Tap Wires (MA-369832) to Corrector Magnet (MD-390312) as per Q2 Module Assembly (ME-369895).

Technician(s) _____ Date 10-22-05

? 7.40 Wrap the Correction Coil Mounting Blocks (MC-390203) (Qty. 4) with 3 mil Kapton as per Q2 Module Assembly (ME-369895).

Technician(s) _____ Date 10-22-05

8.0 Electrical Inspection

8.1 Perform an electrical inspection on each of the Individual Quadrants and the Cold Masses. Refer to the Valhalla and Leader Free Standing Coil Measurement Procedure (ES-292306).

To measure the resistance of a bussed Q2:

1. Use Valhalla Scientific 4300B digital micro-ohmmeter.
2. Set Test Current to 1 amp.
3. Set Scale to 2V full scale.
4. Turn temperature compensation on.
5. Turn test current off.
6. Put jumper between Q2a Q3 inner power lead and 5 KA bus as shown in figure.
7. Connect I_{HI} to the 5KA bus (Q2a Q3 inner power lead) as shown in figure.
8. Connect I_{LO} to the Q2b Q3 inner power lead as shown in figure.
9. Turn test current on.
10. Connect V_{HI} and V_{LO} to voltage taps as shown below.
11. Read resistance and record in traveler.

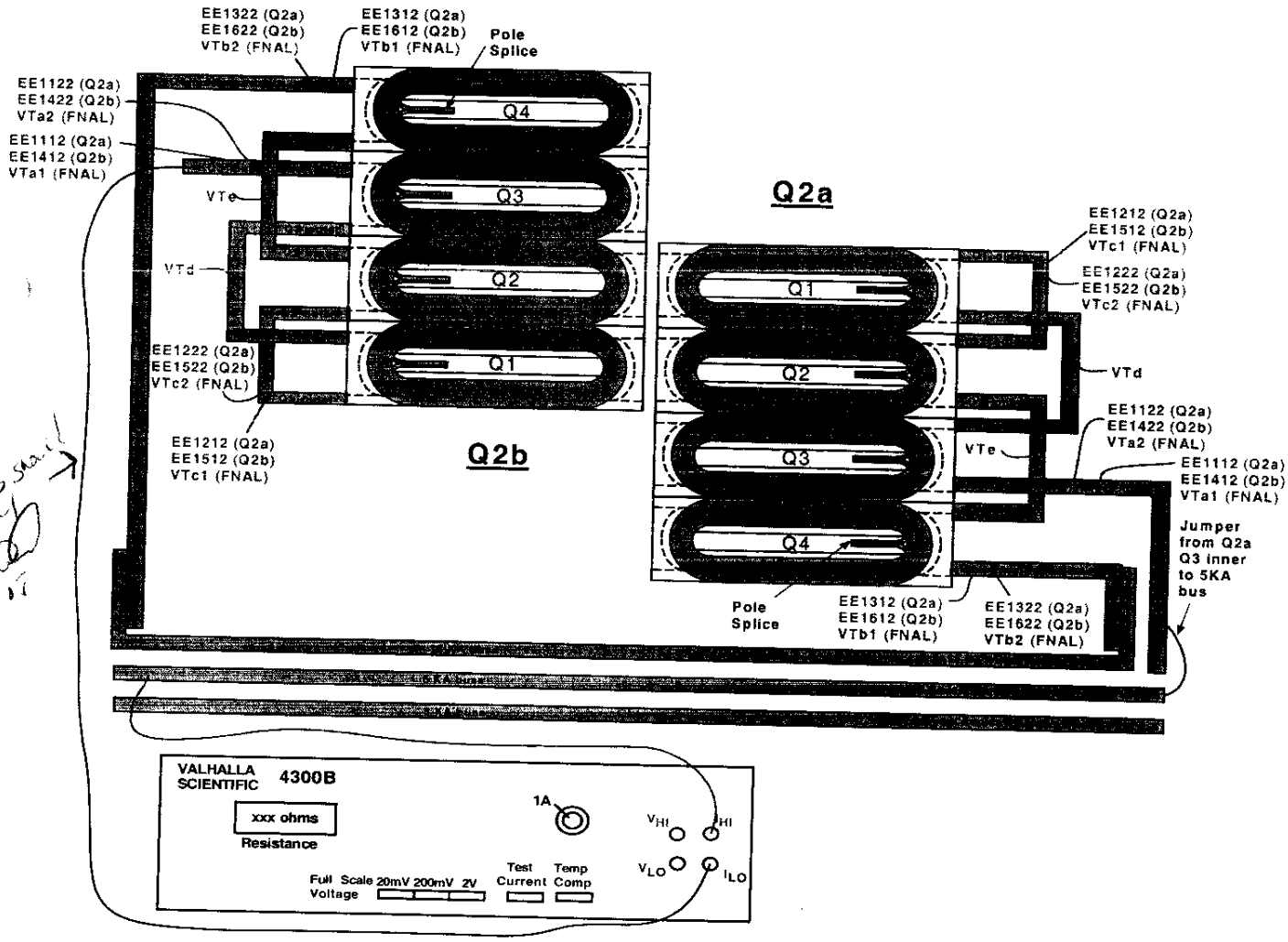

(Q2a) Resistance				Nominal ~ 560 to 585 mΩ
				Quadrant Total Resistance
Connect	Fermi	CERN	Quadrant	
V_{HI}	VTdQ2a	EMPTY	Quadrant 1	572 mΩ
V_{LO}	VTc1Q2a	EE1212		
V_{HI}	VTc1Q2a	EE1212	Quadrant 2	571 mΩ
V_{LO}	VTeQ2a	EMPTY		
V_{HI}	VTa1Q2a	EE1112	Quadrant 3	572 mΩ
V_{LO}	VTdQ2a	EMPTY		
V_{HI}	VTeQ2a	EMPTY	Quadrant 4	572 mΩ
V_{LO}	VTb1Q2a	EE1312		

Set test current to 0.1 Amps for Total Resistance Measurement

V_{HI}	VTa1Q2a	EE1112	Total Cold Mass	Nominal ~ 2.305 Ω
V_{LO}	VTb1Q2a	EE1312		2.320 Ω

Technician(s) [signature] / Ines Ramos Date 10-24-05

Check resistance of Redundant Voltage Taps.

Q2a Redundant Voltage Taps				
Connect	Fermi	CERN	Resistance	Nominals
V_{HI}	VTa2Q2a	EE1122	1144 Ω	1120 - 1170 mΩ
V_{LO}	VTc2Q2a	EE1222		
V_{HI}	VTc2Q2a	EE1222	1142 Ω	1120 - 1170 mΩ
V_{LO}	VTb2Q2a	EE1322		

Technician(s) [signature] / Ines Ramos Date 11-24-05

To measure Ls and Q of a Bussed Q2a:

1. Use Agilent 4263B LCR Meter.
2. Turn power on by pushing Line button. Wait 30 seconds until display screen is lit.
3. Recall program #1. To do this, push recall (Rcl), then push #1, then push Enter.
4. Push Auto/Hold button to release hold.
5. Verify that the frequency displayed in the upper right corner of the display screen is 1000 Hz and the level recorded in the lower right corner of the display screen is 1V or 1000 mV.
6. Connect jumper between Q2a/Quadrant 3 inner power lead and 5KA bus as shown in figure.
7. Connect H_{cur} to Q2b/Quadrant 3 inner power lead as shown in figure.
8. Connect L_{cur} to 5KA bus as shown in figure.
9. Connect H_{pot} and L_{pot} buttons to voltage taps as shown below.

To measure Q2a:

- To measure Q1, connect H_{pot} to VTc1 (EE1212 for Q2a), and L_{pot} to VTd.
- To measure Q2, connect H_{pot} to VTe and L_{pot} to VTc1 (EE1212 for Q2a).
- To measure Q3, connect H_{pot} to VTd and L_{pot} to VTa1 (EE1112 for Q2a).
- To measure Q4, connect H_{pot} to VTb1 (EE1312 for Q2a), and L_{pot} to VTe.
- To measure total, connect H_{pot} to VTb1 (EE1312 for Q2a), and L_{pot} to VTa1 (EE1112 for Q2a).

10. Read Ls and Q from display and record in traveler.

WRONG Should be Q-4

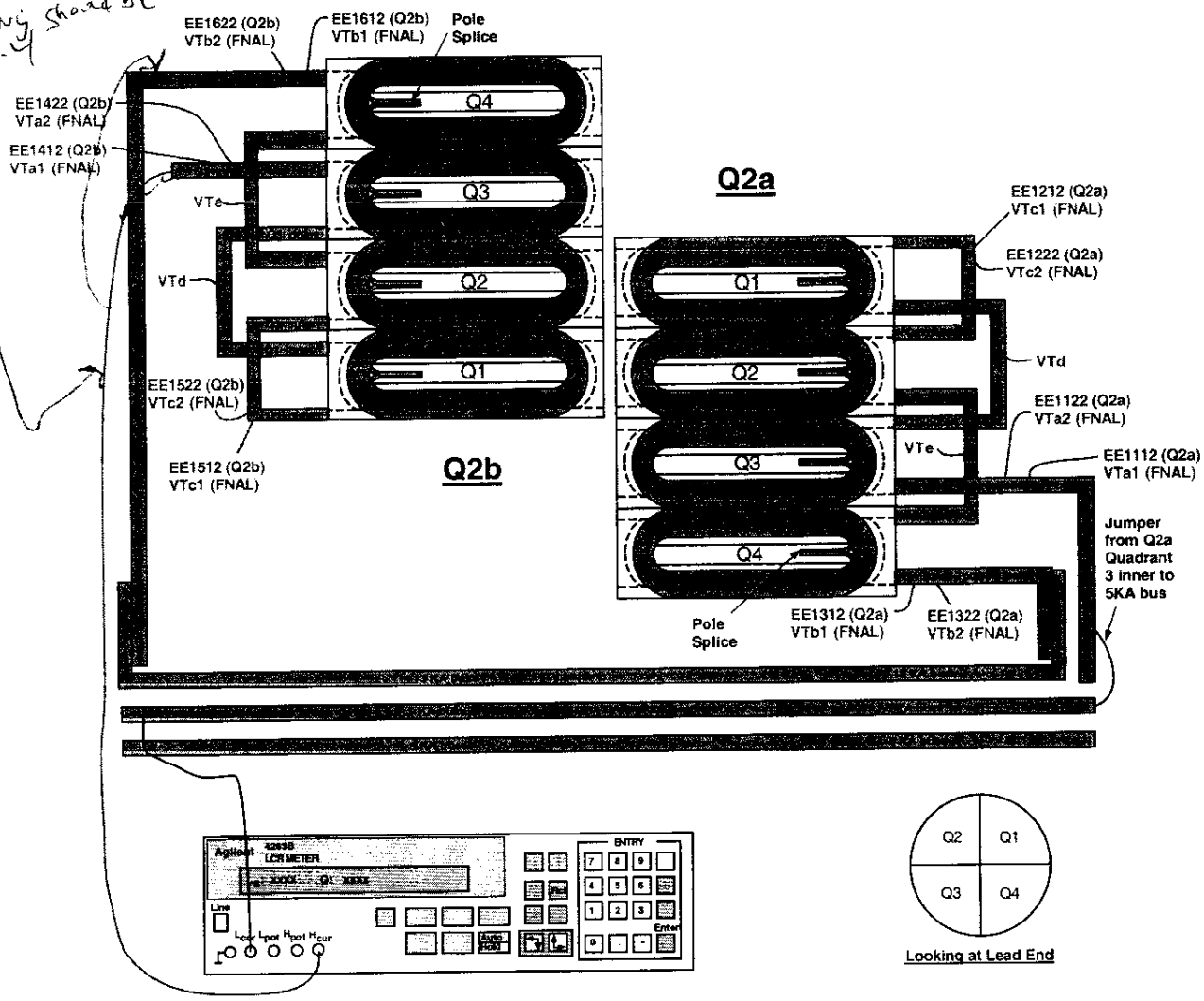

(Q2a) Inductance				Nominal ~ 3.34 to 3.48 mH
Connect	Fermi	CERN	Quadrant	Quadrant Total Inductance
L_{POT}	VTdQ2a	EMPTY	Quadrant 1	3.41 mH
H_{POT}	VTc1Q2a	EE1212		
L_{POT}	VTc1Q2a	EE1212	Quadrant 2	3.42 mH
H_{POT}	VTeQ2a	EMPTY		
L_{POT}	VTdQ2a	EMPTY	Quadrant 3	3.40 mH
H_{POT}	VTa1Q2a	EE1112		
L_{POT}	VTeQ2a	EMPTY	Quadrant 4	3.37 mH
H_{POT}	VTb1Q2a	EE1312		

L_{POT}	VTa1Q2a	EE1112	Total Cold Mass	Nominal ~ 13.3376 mH
H_{POT}	VTb1Q2a	EE1312		13.605 mH

(Q2a) Q-Factor				Nominal ~ 4.5 to 5.2
Connect	Fermi	CERN	Quadrant	Quadrant Total Q
L_{POT}	VTdQ2a	EMPTY	Quadrant 1	5.0
H_{POT}	VTc1Q2a	EE1212		
L_{POT}	VTc1Q2a	EE1212	Quadrant 2	5.1
H_{POT}	VTeQ2a	EMPTY		
L_{POT}	VTa1Q2a	EE1112	Quadrant 3	5.3
H_{POT}	VTdQ2a	EMPTY		
L_{POT}	VTeQ2a	EMPTY	Quadrant 4	5.2
H_{POT}	VTb1Q2a	EE1312		

L_{POT}	VTa1Q2a	EE1112	Total Cold Mass	Nominal ~ 4.5 to 5.2
H_{POT}	VTb1Q2a	EE1312		5.2

Technician(s)

10-24-05
Date

To measure the resistance of a bussed Q2:

1. Use Valhalla Scientific 4300B digital micro-ohmmeter.
2. Set Test Current to 1 amp.
3. Set Scale to 2V full scale.
4. Turn temperature compensation on.
5. Turn test current off.
6. Put jumper between Q2a Q3 inner power lead and 5 KA bus as shown in figure.
7. Connect I_{HI} to the 5KA bus (Q2a Q3 inner power lead) as shown in figure.
8. Connect I_{LO} to the Q2b Q3 inner power lead as shown in figure.
9. Turn test current on.
10. Connect V_{HI} and V_{LO} to voltage taps as shown below.
11. Read resistance and record in traveler.

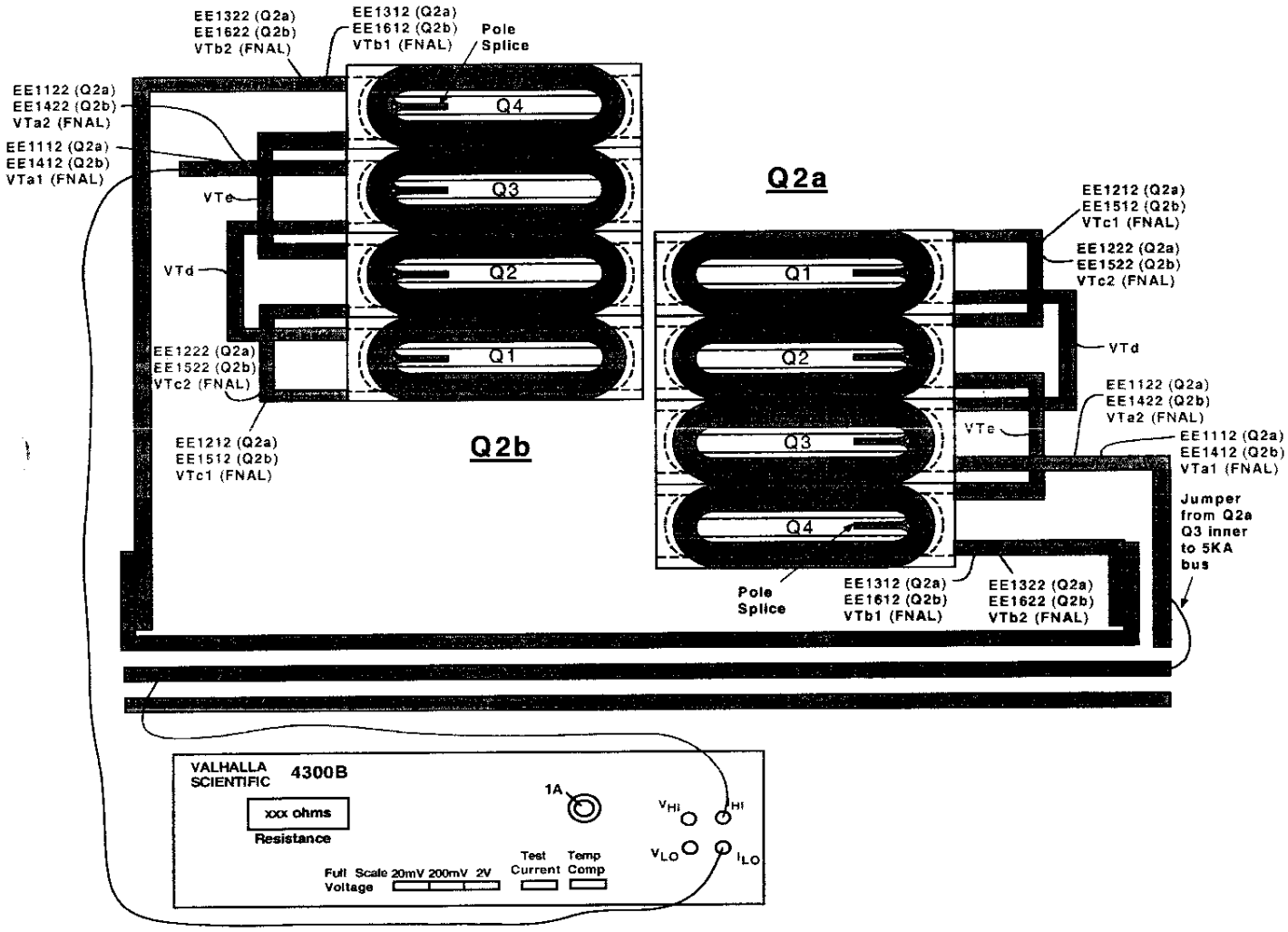

(Q2b) Resistance				Nominal ~ 560 to 585 mΩ
Connect	Fermi	CERN	Quadrant	Quadrant Total Resistance
V_{HI}	VTc1Q2b	EE1512	Quadrant 1	570.4 mΩ
V_{LO}	VTdQ2b	EMPTY		
V_{HI}	VTeQ2b	EMPTY	Quadrant 2	570.0 mΩ
V_{LO}	VTc1Q2b	EE1512		
V_{HI}	VTdQ2b	EMPTY	Quadrant 3	570.4 mΩ
V_{LO}	VTa1Q2b	EE1412		
V_{HI}	VTb1Q2b	EE1612	Quadrant 4	570.5 mΩ
V_{LO}	VTeQ2b	EMPTY		

Set test current to 0.1 Amps for Total Resistance Measurement

V_{HI}	VTb1Q2b	EE1612	Total Cold Mass	Nominal ~ 2.305Ω
V_{LO}	VTa1Q2b	EE1412		2.282 Ω

Technician(s) 10·24·05 Date

Check the resistance of the Redundant Voltage Taps.

Q2b Redundant Voltage Taps				
Connect	Fermi	CERN	Resistance	Nominals
V_{HI}	VTc2Q2b	EE1522	1141 Ω	1120 - 1170 mΩ
V_{LO}	VTa2Q2b	EE1422		
V_{HI}	VTb2Q2b	EE1622	1141 Ω	1120 - 1170 mΩ
V_{LO}	VTc2Q2b	EE1522		

Technician(s) 10·24·05 Date

To measure Ls and Q of a Bussed Q2b:

1. Use Agilent 4263B LCR Meter.
2. Turn power on by pushing line button. Wait 30 seconds until display screen is lit.
3. Recall program #1. To do this, push recall (Rcl), then push #1, then push Enter.
4. Push Auto/Hold button to release hold.
5. Verify that the frequency displayed in the upper right corner of the display screen is 1000 Hz and the level recorded in the lower right corner of the display screen is 1V or 1000 mV.
6. Connect jumper between Q2a/Quadrant 3 inner power lead and 5KA bus as shown in figure.
7. Connect H_{cur} to 5KA bus as shown in figure.
8. Connect L_{cur} to Q2b/Quadrant 3 inner power lead as shown in figure.
9. Connect H_{pot} and L_{pot} buttons to voltage taps as shown below.

   To measure Q2b:
   - To measure Q1, connect H_{pot} to VTc1 (EE1512 for Q2b), and L_{pot} to VTd.
   - To measure Q2, connect H_{pot} to VTe and L_{pot} to VTc1 (EE1512 for Q2b).
   - To measure Q3, connect H_{pot} to VTd and L_{pot} to VTa1 (EE1412 for Q2b).
   - To measure Q4, connect H_{pot} to VTb1 (EE1612 for Q2b) and L_{pot} to VTe.
   - To measure total, connect H_{pot} to VTb1 (EE1612 for Q2b) and L_{pot} to VTa1 (EE1412 for Q2b).
10. Read Ls and Q from display and record in traveler.

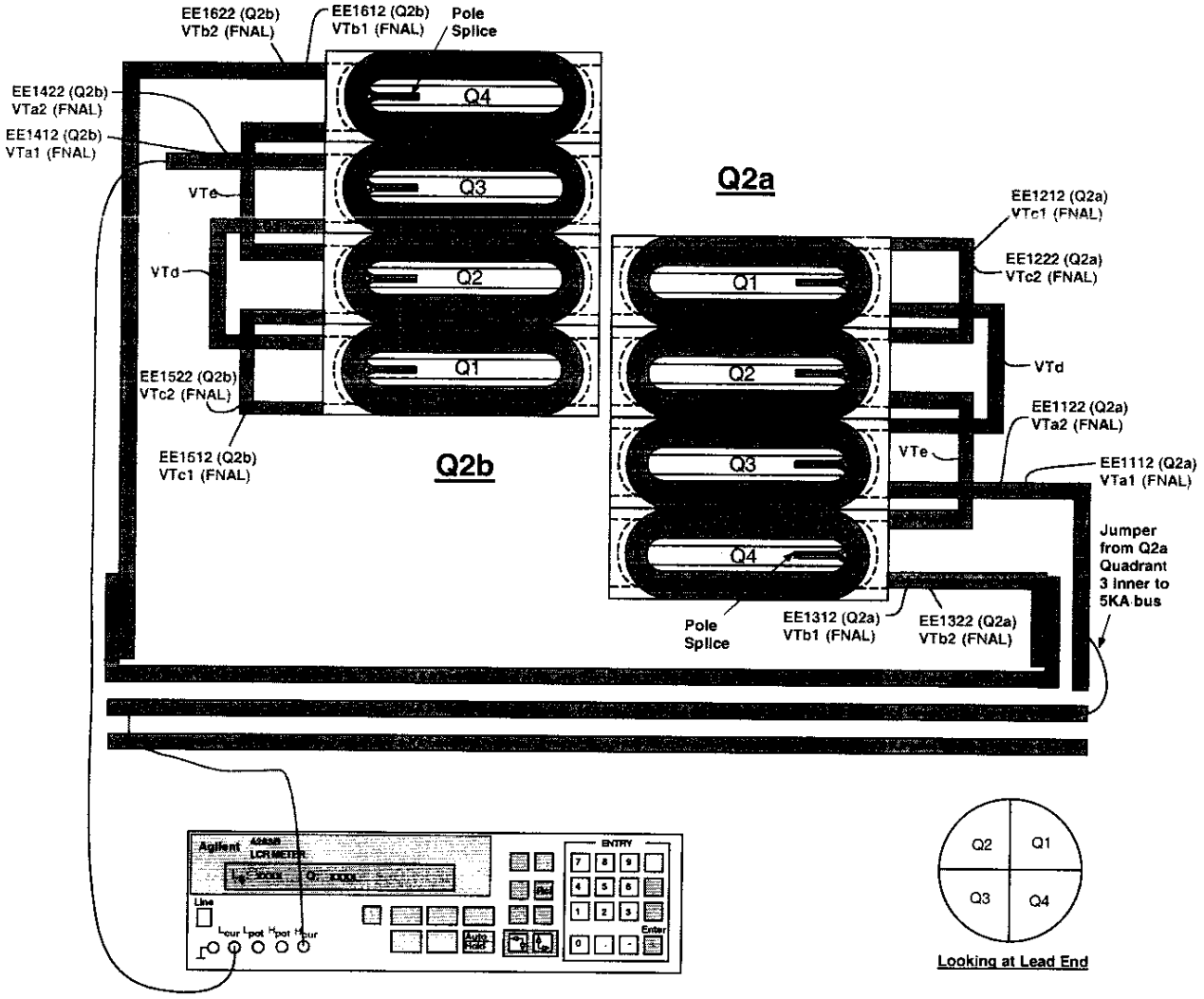

(Q2b) Inductance				Nominal ~ 3.34 to 3.48 mH
				Quadrant Total Inductance
Connect	Fermi	CERN	Quadrant	
H_{POT}	VTc1Q2b	EE1512	Quadrant 1	3.37 mH
L_{POT}	VTdQ2b	EMPTY		
H_{POT}	VTeQ2b	EMPTY	Quadrant 2	3.37 mH
L_{POT}	VTc1Q2b	EE1512		
H_{POT}	VTdQ2b	EMPTY	Quadrant 3	3.37 mH
L_{POT}	VTa1Q2b	EE1412		
H_{POT}	VTb1Q2b	EE1612	Quadrant 4	3.31 mH
L_{POT}	VTeQ2b	EMPTY		

H_{POT}	VTb1Q2b	EE1612	Total Cold Mass	Nominal ~ 13.3376 mH
L_{POT}	VTa1Q2b	EE1412		13.391 mH

(Q2b) Q-Factor				Nominal ~ 4.5 to 5.2
				Quadrant Total Q
Connect	Fermi	CERN	Quadrant	
H_{POT}	VTc1Q2b	EE1512	Quadrant 1	5.3
L_{POT}	VTdQ2b	EMPTY		
H_{POT}	VTeQ2b	EMPTY	Quadrant 2	5.3
L_{POT}	VTc1Q2b	EE1512		
H_{POT}	VTdQ2b	EMPTY	Quadrant 3	5.2
L_{POT}	VTa1Q2b	EE1412		
H_{POT}	VTb1Q2b	EE1612	Quadrant 4	5.4
L_{POT}	VTeQ2b	EMPTY		

H_{POT}	VTb1Q2b	EE1612	Total Cold Mass	Nominal ~ 4.5 to 5.2
L_{POT}	VTa1Q2b	EE1412		5.3

Technician(s)

10-24-05
Date

To measure the resistance of a Thermometer (RTD):

1. Use Hewlett Packard HP3457A digital multimeter.
2. Record temperature of building within +/- 5 degrees.
3. Press line button to turn line on.
4. Connect wires as shown in Figure below.
   U+ (Black) to Sense HI
   I+ (Yellow) to Input HI
   U- (Red) to Sense LO
   I- (Green) to Input LO
5. Push blue button (function key) once.
6. Push OHMF button.
7. Verify arrow in readout is above the 4WΩ (meaning a 4 wire resistance measurement).
8. Read resistance in ohms and record in traveler.

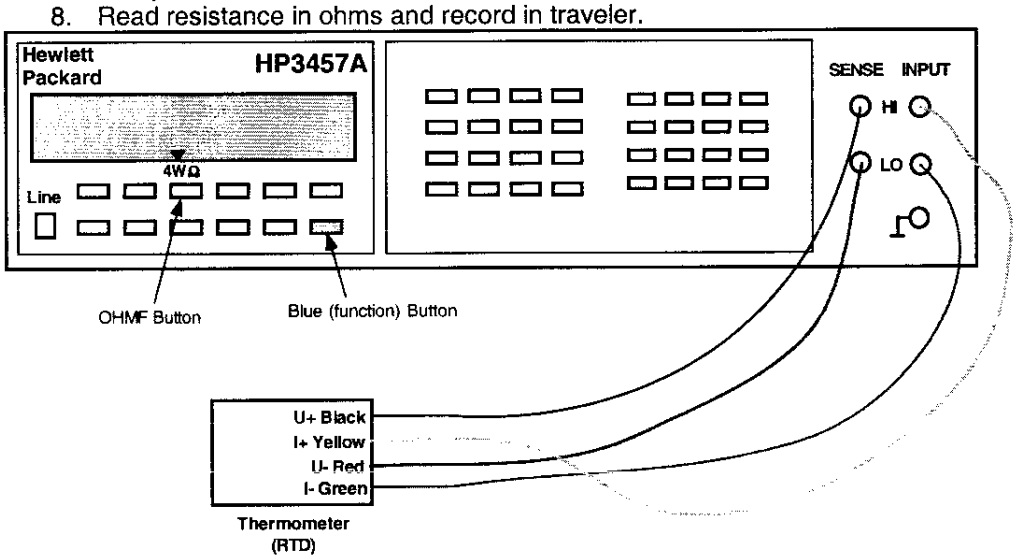

To measure the resistance of a Cryogenic (Warm-up) Heater

1. Use Hewlett Packard HP3457A digital multimeter.
2. Record temperature of building within +/- 5 degrees.
3. Press line button to turn line on.
4. Connect wires as shown in Figure below.
5. Push blue button (function key) once.
6. Push OHMF button.
7. Verify arrow in readout is above the 4WΩ (meaning a 4 wire resistance measurement).
   Note: Although this is technically a 4 wire measurement, it is effectively a 2 wire measurement, since there are only 2 wires connected to each heater.
8. Read resistance in ohms and record in traveler.

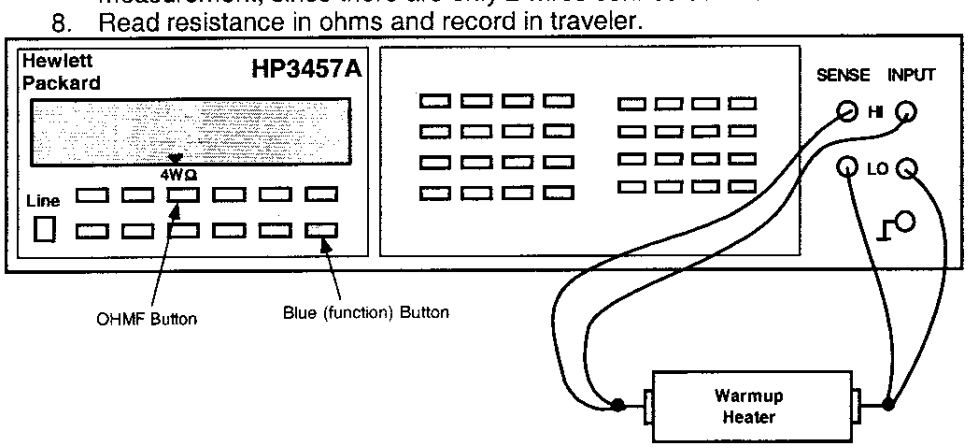

Q2a - RTD's and Cryogenic (warm-up) Heaters				
Temperature of Building (+/- 5°): 68° F				
Component	Fermi	CERN	Resistance	Mfr. Resistance (Expedition)
Q2a RTD, primary	TaQ2a	TT8312	66.020 Ω	63.675 Ω
Q2a RTD, redundant	TbQ2a	TT8322	66.190 Ω	63.319 Ω
Q2A Cryogenic (warm-up) Heater (LE) - wire toward cold mass end plate (CERN #1 I+)	W1aQ2A	EH8312+	16.926 Ω	
Q2A Cryogenic (warm-up) Heater (LE) - wire toward cold mass mag center (CERN #1 I-)	W2aQ2A	EH8312-		
Q2A Cryogenic (warm-up) Heater (Non-LE) - wire toward cold mass end plate (CERN #2 I+)	W1bQ2A	EH8322+	16.522 Ω	
Q2A Cryogenic (warm-up) Heater (Non-LE) - wire toward cold mass mag center (CERN #2 I-)	W2bQ2A	EH8322-		

Technician(s) 10-24-05 Date

Q2b - RTD's and Cryogenic (warm-up) Heaters				
Temperature of Building (+/- 5°): 68°F				
Component	Fermi	CERN	Resistance	Mfr. Resistance (Expedition)
Q2b RTD, primary	TaQ2b	TT8332	65.080 Ω	68.59 Ω
Q2b RTD, redundant	TbQ2b	TT8342	70.811 Ω	68.59 Ω
Q2B Cryogenic (warm-up) Heater (LE) - wire toward cold mass end plate (CERN #1 I+)	W1aQ2B	EH8332+	16.197 Ω	
Q2B Cryogenic (warm-up) Heater (LE) - wire toward cold mass mag center (CERN #1 I-)	W2aQ2B	EH8332-		
Q2B Cryogenic (warm-up) Heater (Non-LE) - wire toward cold mass end plate (CERN #2 I+)	W1bQ2B	EH8342+	16.466 Ω	
Q2B Cryogenic (warm-up) Heater (Non-LE) - wire toward cold mass mag center (CERN #2 I-)	W2bQ2B	EH8342-		

Technician(s) 10-24-05 Date

Using the Hewlett Packard HP3457A digital multimeter, measure the Strip Heater Resistance for Q2a and Q2b.

Q2a Strip Heater Resistance				
Fermi	CERN	Description	Limit	Resistance
H1aQ2a	YT1112+	Circuit A	18.20 to 21Ω	18.81 Ω
H2aQ2a	YT1112-			
H1bQ2a	YT1122+	Circuit B	18.20 to 21Ω	18.81 Ω
H2bQ2a	YT1122-			

Technician(s) 10-24-05 Date

Q2b Strip Heater Resistance				
Fermi	CERN	Description	Limit	Resistance
H1aQ2b	YT1132+	Circuit A	18.20 to 21Ω	18.05 Ω
H2aQ2b	YT1132-			
H1bQ2b	YT1142+	Circuit B	18.20 to 21Ω	17.96 Ω
H2bQ2b	YT1142-			

Technician(s) 10-24-05 Date

8.2 Using the HP3457A, connect power thru the connector Power Leads (H2A and H2B to measure Q2-H2 or V2A and V2B to measure Q2-V2). Connect the Sense Leads as shown in table below and record resistance.

Corrector Bus Leads

	V2A	V2B	H2A	H2B
	V1A	V1B	H1A	H1B

(View Looking into Q2b)

Readout Labels		Power Labels	Resistance	Nominal Resistance
V2A	EE8112	V2A, V2B	.04 Ω	< 5 Ω
EE8112	V2B		17.166 Ω	> 14 Ω
V2A	V2B		17.212 Ω	18-20 Ω
H2A	EE8122	H2A, H2B	.05 Ω	< 5 Ω
EE8122	H2B		21.13 Ω	> 14 Ω
H2A	H2B		21.17 Ω	21.5-23.5 Ω

Technician(s) 10-24-05 Date

8.3 Check Q1 Instrumentation Bus Wires for Continuity.

Module	Pin	Fermi	CERN	KEK	Description	Done
M2	1	VTa1Q1	EE1111	a1	Q1 Lead Voltage Tap "a", primary	✓
M2	2	VTa2Q1	EE1121	a2	Q1 Lead Voltage Tap "a", redundant	✓
M2	3	VTc1Q1	EE1211	c1	Q1 Center Voltage Tap "c", primary	✓
M2	4	VTc2Q1	EE1221	c2	Q1 Center Voltage Tap "c", redundant	✓
M2	5	VTb1Q1	EE1311	b1	Q1 Lead Voltage Tap "b", primary	✓
M3	5	VTb2Q1	EE1321	b2	Q1 Lead Voltage Tap "b", redundant	✓
M5	1	VTH1	EE8121		Corrector voltage tap Q1-H1 (skew dipole) (on MCBX, MCBXH, A+ lead)	✓
M5	2	VTV1	EE8111		Corrector voltage tap Q1-V1 (normal dipole) (on MCBX, MCBXV A+ lead)	✓
M7	1	W1aQ1	EH8311+		Q1 Cryogenic Heater lead end - wire at top (CERN #1 I+)	✓
M7	2	W2aQ1	EH8311-		Q1 Cryogenic Heater lead end - wire at bottom (CERN #1 I-)	✓
M7	3	W1bQ1	EH8321+		Q1 Cryogenic Heater non-lead end - wire at top (CERN #2 I+)	✓
M7	4	W2bQ1	EH8321-		Q1 Cryogenic Heater non-lead end - wire at bottom (CERN #2 I-)	✓
M9	1	H1aQ1	YT1111+	HA1	Q1 Protection (Strip) Heater, ("a" circuit) (CERN lead #1+)	✓
M9	3	H2aQ1	YT1111-	HA2	Q1Protection (Strip) Heater, ("a" circuit) (CERN lead #1-)	✓
M9	5	H1bQ1	YT1121+	HB1	Q1 Protection (Strip) Heater, ("b" circuit) (CERN lead #2+)	✓
M10	4	H2bQ1	YT1121-	HB2	Q1 Protection (Strip) Heater, ("b" circuit) (CERN lead #2-)	✓
M12	1	TaQ1_I+	TT8311 I+		Q1 RTD, primary Wire color: Yellow	✓
M12	2	TaQ1_I-	TT8311 I-		Q1 RTD, primary Wire color: Green	✓
M12	3	TaQ1_V+	TT8311 U+		Q1 RTD, primary Wire color: Black	✓
M12	4	TaQ1_V-	TT8311 U-		Q1 RTD, primary Wire color: Red	✓
M12	5	TbQ1_I+	TT8321 I+		Q1 RTD, primary Wire color: Yellow	✓
M12	6	TbQ1_I-	TT8321 I-		Q1 RTD, primary Wire color: Green	✓
M12	11	TbQ1_V+	TT8321 U+		Q1 RTD, primary Wire color: Black	✓
M12	10	TbQ1_V-	TT8321 U-		Q1 RTD, primary Wire color: Red	✓
SPARE		SPARE	SPARE		SPARE	✓

Technician(s) — Date: October 24, 2005

STOP

Responsible Authority/Physicist — Date: 24 · OCT · 2005

9.0 Dome Setup

9.1 Attach IP End Dome (MD-390197) (Q2a) to the End Dome Positioning Fixture (MD-369776). Feed the Electrical wires/Bus through the proper ports as the Dome is brought into position against the End Plate. Ensure that no damage to wires has occurred during insertion.

Technician(s) _____ Date 10-25-05

9.2 Align IP End Dome (MD-390197) as shown in Q2 Cold Mass Welded Assembly (ME-390309).

Technician(s) _____ Date 10-25-05

9.3 Level the IP End Dome (MD-390197) using the Ball Socket (MD-369777) and the Mini Level.

Technician(s) _____ Date 10-25-05

9.4 Mark the IP End Dome (MD-390197) and the End Plate with a Horizontal Witness Line. This Step will be used in Step 11.0 to reposition the Domes prior to Welding.

Technician(s) _____ Date 10-25-05

9.5 Remove the IP End Dome (MD-390197) from the Tooling.

Technician(s) _____ Date 10-25-05

9.6 Attach Non-IP End Dome (MD-390253) (Q2b) to the End Dome Positioning Fixture (MD-369776). Feed the Electrical wires/bus through the proper ports as the Non-IP End Dome (MD-390253) is brought into position against the End Plate.

Technician(s) _____ Date 10-26-05

9.7 Align Non-IP End Dome (MD-390253) as shown in Q2 Cold Mass Welded Assembly (ME-390309).

Technician(s) _____ Date 10-26-05

9.8 Level the Non-IP End Dome (MD-390253) using the Ball Socket (MD-369777) and the Mini Level.

Technician(s) _____ Date 10-26-05

9.9 Mark the Non-IP End Dome (MD-390253) and the End Plate with a Horizontal Witness Line. This Step will be used in Step 11.0 to reposition the Domes prior to Welding.

Technician(s) _____ Date 10-26-05

9.10 Remove the Non-IP End Dome (MD-390253) from the Tooling.

Technician(s) _____ Date 10-26-05

10.0 Beam Tube Insertion

10.1 Inspect the Beam Tube (MD-369802) for damage. Clean Beam Tube using lint free Heavy Duty Wipers (Fermi stock 1660-0150) and Isopropyl Alcohol (Fermi stock 1920-0300) as per Insulated Beam Tube Assembly for Q2a/Q2b (MD-369802).

Technician(s) _____ Date 10-26-05

10.2 Verify Alignment of Q2a, Q2b and Corrector Magnet (MD-390312) as per Q2 Cold Mass Welded Assembly (ME-390309).

Responsible Authority/Physicist _____ Date 10/26/05

10.3 Prepare the Beam Tube insertion area with .003" Kapton Tape.

Technician(s) _____ Date 10-26-05

10.4 Using Insertion Tooling, insert the Beam Tube (MD-369802) into the Magnet Assembly as per Beam Tube Insertion Tooling (MD-369789).

Technician(s) _____ Date 10-26-05

10.5 Center the Beam Tube (MD-369802) between the Cold Masses by leaving equal amounts of insulated Beam Tube protruding from the End Plates. Measure from the face of the End Plate to the End of the Kapton Wrap on the Beam Tube.

Technician(s) _____ Date 10-26-05

10.6 Measure the Beam Tube length and record this measurement below.

10.6.1 Beam Tube Length: 14296

10.6.2 Subtract 12,610 mm (± 2mm) from the Beam Tube Length, and record here: 1686

10.6.3 Divide the Number recorded in step 10.6.2 by 2 and record here: 843

The measurement recorded in step 10.6.3 is the amount to be cut off from each end.

Technician(s) _____ Date 10-26-05

10.7 Measure from one end of the Beam Tube and place a mark at the distance from step 10.6.3.

Technician(s) _____ Date 10-26-05

10.8 Verify the placement of the Mark, measured in Step 10.7 is correct.

STOP

Crew Chief _____ Date 10/26/05

10.9 Using the Wachs Cutter, cut the Beam Tube at the Mark from Step 10.7.

Technician(s) _____ Date 10-26-05

10.10 Measure from the uncut end of the Beam Tube and place a mark at the distance from step 10.6.3.

Technician(s) _____ Date 10-26-05

10.11 Verify the placement of the Mark, measured in Step 10.10 is correct. Measuring from the End Plate, this mark should be equal to the 'End Plate to Beam Tube' distance at the other end.

STOP

Crew Chief _____ Date 10/26/05

10.12 Using the Wachs Cutter, cut the Beam Tube at the Mark from Step 10.10.

Technician(s) _____ Date 10-26-05

10.13 Measure and verify Beam Tube length is 12,610 (±2mm). Record Actual Beam Tube Length below.

Actual Beam Tube Length	12,610 mm

Technician(s) _____ Date 10-26-05

STOP

Responsible Authority/Physicist _____ Date 10/26/05

10.14 Hipot the Beam Tube to coil, heaters, RTD's and ground. (5kV) (Max. Leakage < 0.5μA).

STOP

Have Crew Chief verify setup and sign below before continuing.

Crew Chief _____ Date 10/27/05

Hipot	Leakage or Failure Voltage	Pass	Fail
Beam Tube to coil, heaters and ground	1605 NA	✓	

Technician(s) _____ Date 10-27-05

STOP

Responsible Authority/Physicist _____ Date 27-OCT-2005

11.0 Dome Installation

Ensure that a protective sleeve is placed inside the bellows between the convolutions and the bracket to prevent damage to the convolutions.

11.2 While feeding the Electrical wires/Bus through the proper ports, reposition the IP End Dome as shown in Q2 Cold Mass Welded Assembly (ME-390309) using the Horizontal Witness Line from step 9.5 as the IP End Dome (MD-390197) is brought into position against the End Plate.

Technician(s) _____ Date 10-27-05

11.3 Tack weld the IP End Dome in place at approximately 6-8 places around the Dome per (ME-390309).

Weldor(s) _____ Date 10/27/05

11.4 Weld the IP End Dome, skip weld around to minimize distortion per (ME-390309).

Weldor(s) _____ Date 10/27/05

11.5 Reposition the Non-IP End Dome as shown in Q2 Cold Mass Welded Assembly (ME-390309) using the Horizontal Witness Line from step 9.11.

Technician(s) _____ Date 10-27-05

11.6 While feeding the Electrical wires/Bus through the proper ports, Reposition the Non-IP End Dome as shown in Q2 Cold Mass Welded Assembly (ME-390309) using the Horizontal Witness Line from step 9.11, as the Non-IP End Dome is brought into position against the End Plate.

Technician(s) _____ Date 10-27-05

11.7 Tack weld the Non-IP End Dome in place at approximately 6-8 places around the Dome as per (ME-390309).

Weldor(s) _____ Date 10/27/05

11.8 Weld the Non-IP End Dome, skip weld around to minimize distortion as per (ME-390309).

CHANDER SOOD

Weldor(s) _____ Date 10-28-05

11.9 Tack weld the corrector mounting hardware in place as per Q2 Coldmass welded assembly (ME-390309).

Weldor(s) _____ Date 10/28/05

11.10 If needed, perform a stretched wire measurement of the system, noting the relative position and roll of the three magnetic elements to each other.

Performed Stretch Wire Measurement?

Yes ☐ **No** ☒

STOP

Responsible Authority/Physicist _____ Date 10/28/05

11.11 Mark / Layout and adjust the Shipping Restraint Nuts (MC-390294).

Technician(s) _____ Date 10-26-05

11.12 Weld the Shipping Restraint Nuts (MC-390294) to the Corrector.

Weldor(s) _____ Date 10/26/05

11.13 Install and adjust the Shipping Restraint Screws (MC-390230).

Technician(s) _____ Date 10/28/05

11.14 Weld the Center Body Tube (MC-390112) as per Q2 Cold Mass Welded Assembly (ME-390309). (Weld Specification ES-333781)

Weldor(s) _____ Date 10/28/05 / 10/29/05

11.15 Undo the Cold Mass / Cryostat Station Support & Clamping Fixture (ME-369768).

Technician(s) _____ Date 11-4-05

11.16 Perform a stretched wire measurement of the system to align the Cold Mass within ± .2 mR.

Responsible Authority/Physicist _____ Date 11/2/05

12.0 Cold Bore

12.1 Flare both ends of the Beam Tube using Flaring Tool (MC-390416) per Q2 Cold Mass Welded Assembly (MB-390309).

Technician(s) _____ Date 11/3/05

12.2 Center the Beam Tube in the Cold Mass as close as possible.

Technician(s) _____ Date 11-1-05

12.3 Measure from the IP End of the Beam Tube to the Spot Face on the IP End Dome. Round to nearest 0.5 mm. Record below.

Record measurement here: 26

Technician(s) _____ Date 11-1-05

12.4 Measure from the Non-IP End of the Beam Tube to the Spot Face on the Non-IP End Dome. Round to nearest 0.5 mm. Record below.

Record measurement here: 27

Technician(s) _____ Date 11-1-05

12.5 Add the results from Steps 12.3 and 12.4 above. Record below.

Recorded Measurement from Step 12.3: 26

Recorded Measurement from Step 12.4: + 27

Result: 53

Technician(s) _____ Date 11-1-05

12.6 Subtract 30mm from the number recorded in Step 12.5. Record below.

Result from Step 12.5: 54

Subtract: - 30mm

Result: ~~23~~ 24

Technician(s) _____ Date 11-1-05

12.7 Divide the result from Step 12.6 by 2. This is the Spacer width for both the IP End and the Non-IP End. Make two spacers this size. Record below.

Result from step 12.6: 24

Divide: ÷ 2

Spacer width for each end: ~~131.5~~ 12

Technician(s) _____ Date 11-1-05

12.8 Weld the spacers from step 12.7 to the beam tube flanges, part number 390300.

Bob

Weldor(s) _____ Date 11/3/05

12.9 Position Cold Bore Flange (MC-390300) over the Beam Tube and onto IP End Dome (Q2a) per Q2 Cold Mass Welded Assembly (MB-390309).

Technician(s) _____ Date 11/3/05

12.10 Weld the Beam Tube to the Flange at IP End as per Q2 Cold Mass Welded Assembly (ME-390309).

Bob

Weldor(s) _____ Date 11/3/05

12.11 Position the Cold Bore Flange (MC-390300) over the Beam Tube and onto the Non-IP End Dome (Q2b) per Q2 Cold Mass Welded Assembly (MB-390309).

Technician(s) _____ Date 11/3/05

12.12 Weld Beam Tube to Flange at NON-IP End as per Q2 Cold Mass Welded Assembly (ME-390309).

BD

Weldor(s) Date 11/3/05

12.13 Perform a Stretched Wire Verification Measurement.

STOP

JOE

Responsible Authority/Physicist Date 11/04/05

12.14 Align Beam Tube and the Flange at IP End per Q2 Cold Mass Welded Assembly (MB-390309).

Technician(s) Date 11-4-05

*12.15 Weld the Flange to the IP End Dome as per Q2 Cold Mass Welded Assembly (ME-390309).

Chandler Sood

Weldor(s) Date 11/4/05

12.16 Align Beam Tube and Flange at NON-IP End per Q2 Cold Mass Welded Assembly (MB-390309).

Technician(s) Date 11-4-05

* 12.17 Weld the Flange to the Non-IP End Dome as per Q2 Cold Mass Welded Assembly (ME-390309).

Chandler Sood

Weldor(s) Date 11/4/05

13.0 Electrical Inspection

13.1 Perform an electrical inspection on each of the Individual Quadrants and the Cold Masses. Refer to the Valhalla and Leader Free Standing Coil Measurement Procedure (ES-292306).

To measure the resistance of a bussed Q2:

1. Use Valhalla Scientific 4300B digital micro-ohmmeter.
2. Set Test Current to 1 amp.
3. Set Scale to 2V full scale.
4. Turn temperature compensation on.
5. Turn test current off.
6. Put jumper between Q2a Q3 inner power lead and 5 KA bus as shown in figure.
7. Connect I_{HI} to the 5KA bus (Q2a Q3 inner power lead) as shown in figure.
8. Connect I_{LO} to the Q2b Q3 inner power lead as shown in figure.
9. Turn test current on.
10. Connect V_{HI} and V_{LO} to voltage taps as shown below.
11. Read resistance and record in traveler.

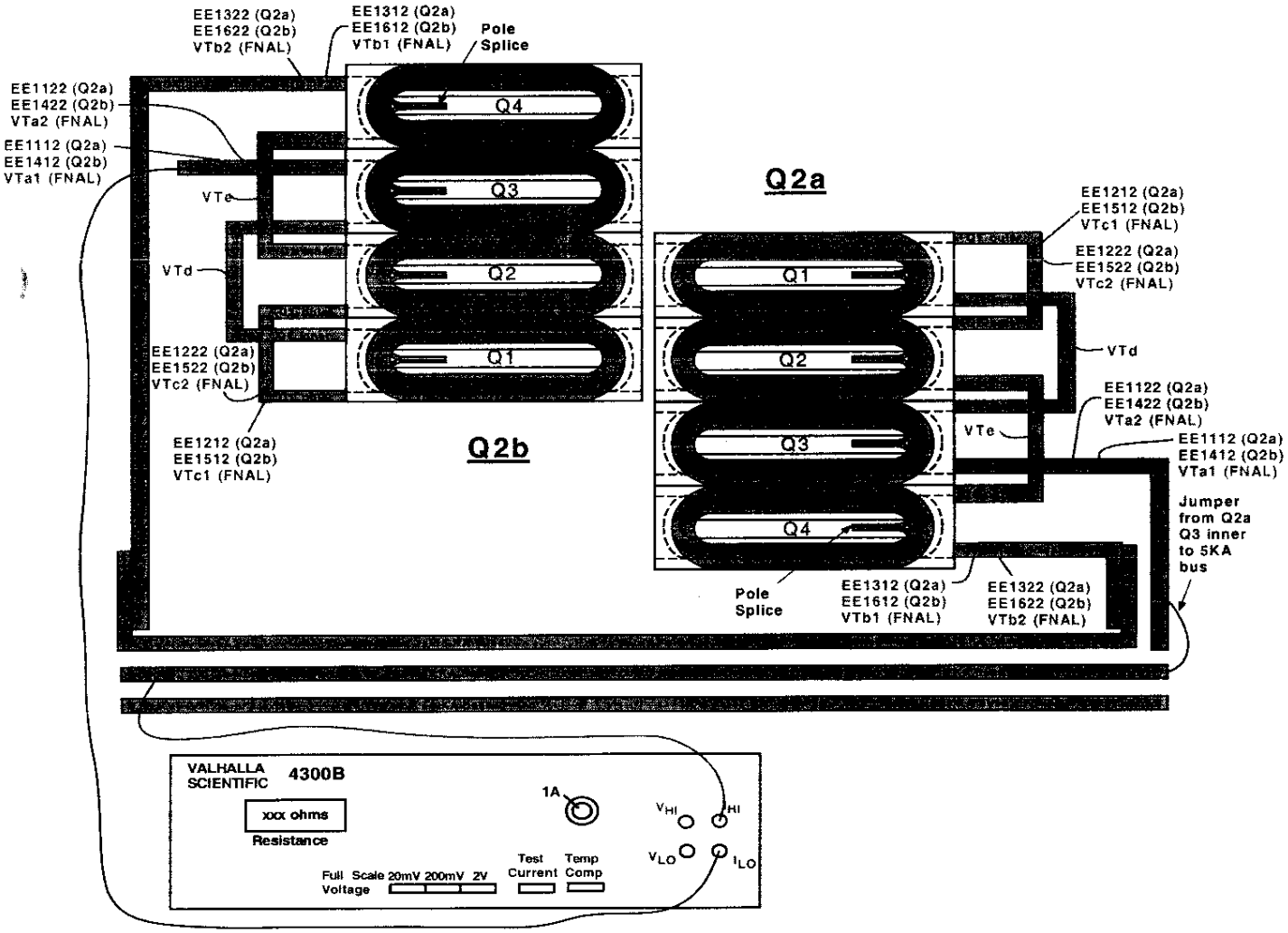

(Q2a) Resistance				Nominal ~ 560 to 585 mΩ
Voltage Tap Serial Numbers				Quadrant Total Resistance
Connect	Fermi	CERN	Quadrant	
V_{HI}	VTdQ2a	EMPTY	Quadrant 1	576.8 mΩ
V_{LO}	VTc1Q2a	EE1212		
V_{HI}	VTc1Q2a	EE1212	Quadrant 2	575.4 mΩ
V_{LO}	VTeQ2a	EMPTY		
V_{HI}	VTa1Q2a	EE1112	Quadrant 3	576.8 mΩ
V_{LO}	VTdQ2a	EMPTY		
V_{HI}	VTeQ2a	EMPTY	Quadrant 4	576.6 mΩ
V_{LO}	VTb1Q2a	EE1312		

Set test current to 0.1 Amps for Total Resistance Measurement

V_{HI}	VTa1Q2a	EE1112	Total Cold Mass	Nominal ~ 2.305Ω
V_{LO}	VTb1Q2a	EE1312		2.306 Ω

Technician(s) _____ Date 11/4/05

Check resistance of Redundant Voltage Taps.

Q2a Redundant Voltage Taps				
Connect	Fermi	CERN	Resistance	Nominals
V_{HI}	VTa2Q2a	EE1122	1154 mΩ	1120 - 1170 mΩ
V_{LO}	VTc2Q2a	EE1222		
V_{HI}	VTc2Q2a	EE1222	1152 mΩ	1120 - 1170 mΩ
V_{LO}	VTb2Q2a	EE1322		

Technician(s) _____ Date 11/4/05

To measure Ls and Q of a Bussed Q2a:

1. Use Agilent 4263B LCR Meter.
2. Turn power on by pushing Line button. Wait 30 seconds until display screen is lit.
3. Recall program #1. To do this, push recall (Rcl), then push the #1, then push Enter.
4. Push Auto/Hold button to release hold.
5. Verify that the frequency displayed in the upper right corner of the display screen is 1000 Hz and the level recorded in the lower right corner of the display screen is 1V or 1000 mV.
6. Connect jumper between Q2a/Quadrant 3 inner power lead and 5KA bus as shown in figure.
7. Connect H_{cur} to Q2b/Quadrant 3 inner power lead as shown in figure.
8. Connect L_{cur} to 5KA bus as shown in figure.
9. Connect H_{pot} and L_{pot} buttons to voltage taps as shown below.

To measure Q2a:

- To measure Q1, connect H_{pot} to VTc1 (EE1212 for Q2a), and L_{pot} to VTd.
- To measure Q2, connect H_{pot} to VTe, and L_{pot} to VTc1 (EE1212 for Q2a).
- To measure Q3, connect H_{pot} to VTd and L_{pot} to VTa1 (EE1112 for Q2a).
- To measure Q4, connect H_{pot} to VTb1 (EE1312 for Q2a), and L_{pot} to VTe.
- To measure total, connect H_{pot} to VTb1 (EE1312 for Q2a), and L_{pot} to VTa1 (EE1112 for Q2a).

10. Read Ls and Q from display and record in traveler.

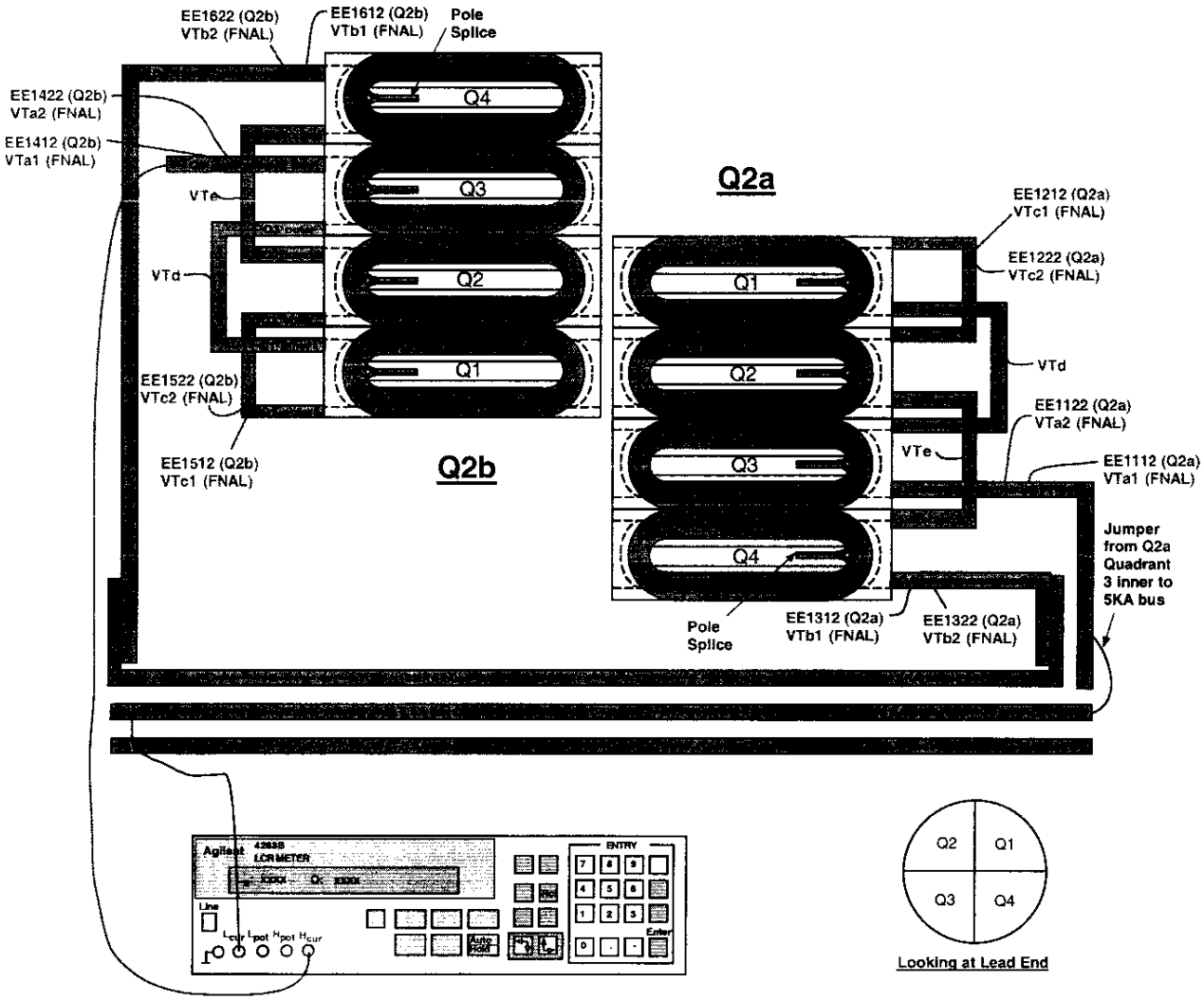

(Q2a) Inductance				Nominal ~ 3.34 to 3.48 mH
Voltage Tap Serial Numbers				Quadrant Total Inductance
Connect	Fermi	CERN	Quadrant	
L_{POT}	VTdQ2a	EMPTY	Quadrant 1	SNG ~~4.036~~ 3.0419 mH
H_{POT}	VTc1Q2a	EE1212		
L_{POT}	VTc1Q2a	EE1212	Quadrant 2	SNG ~~3.325~~ 3.4020 mH
H_{POT}	VTeQ2a	EMPTY		
L_{POT} W POT	VTdQ2a	EMPTY	Quadrant 3	3.3813 mH
H_{POT} E POT	VTa1Q2a	EE1112		
L_{POT}	VTeQ2a	EMPTY	Quadrant 4	3.3450 mH
H_{POT}	VTb1Q2a	EE1312		

IPR 1801 — IPR NEEDED SWITCH 3

L_{POT}	VTa1Q2a	EE1112	Total Cold Mass	Nominal ~ 13.3376 mH
H_{POT}	VTb1Q2a	EE1312		13.523 mH

(Q2a) Q-Factor				Nominal ~ 3.7 to 4.0
Voltage Tap Serial Numbers				Quadrant Total Q
Connect	Fermi	CERN	Quadrant	
L_{POT}	VTdQ2a	EMPTY	Quadrant 1	SNG ~~5.3~~ 4.1
H_{POT}	VTc1Q2a	EE1212		
L_{POT}	VTc1Q2a	EE1212	Quadrant 2	SNG ~~5.1~~ 4.1
H_{POT}	VTeQ2a	EMPTY		
L_{POT}	VTa1Q2a	EE1112	Quadrant 3	4.2
H_{POT}	VTdQ2a	EMPTY		
L_{POT}	VTeQ2a	EMPTY	Quadrant 4	4.2
H_{POT}	VTb1Q2a	EE1312		

L_{POT}	VTa1Q2a	EE1112	Total Cold Mass	Nominal ~ 3.7 to 4.0
H_{POT}	VTb1Q2a	EE1312		4.1

A Gowel
Technician(s)

11/04/05
Date

To measure the resistance of a bussed Q2:

1. Use Valhalla Scientific 4300B digital micro-ohmmeter.
2. Set Test Current to 1 amp.
3. Set Scale to 2V full scale.
4. Turn temperature compensation on.
5. Turn test current off.
6. Put jumper between Q2a Q3 inner power lead and 5 KA bus as shown in figure.
7. Connect I_{HI} to the 5KA bus (Q2a Q3 inner power lead) as shown in figure.
8. Connect I_{LO} to the Q2b Q3 inner power lead as shown in figure.
9. Turn test current on.
10. Connect V_{HI} and V_{LO} to voltage taps as shown below.
11. Read resistance and record in traveler.

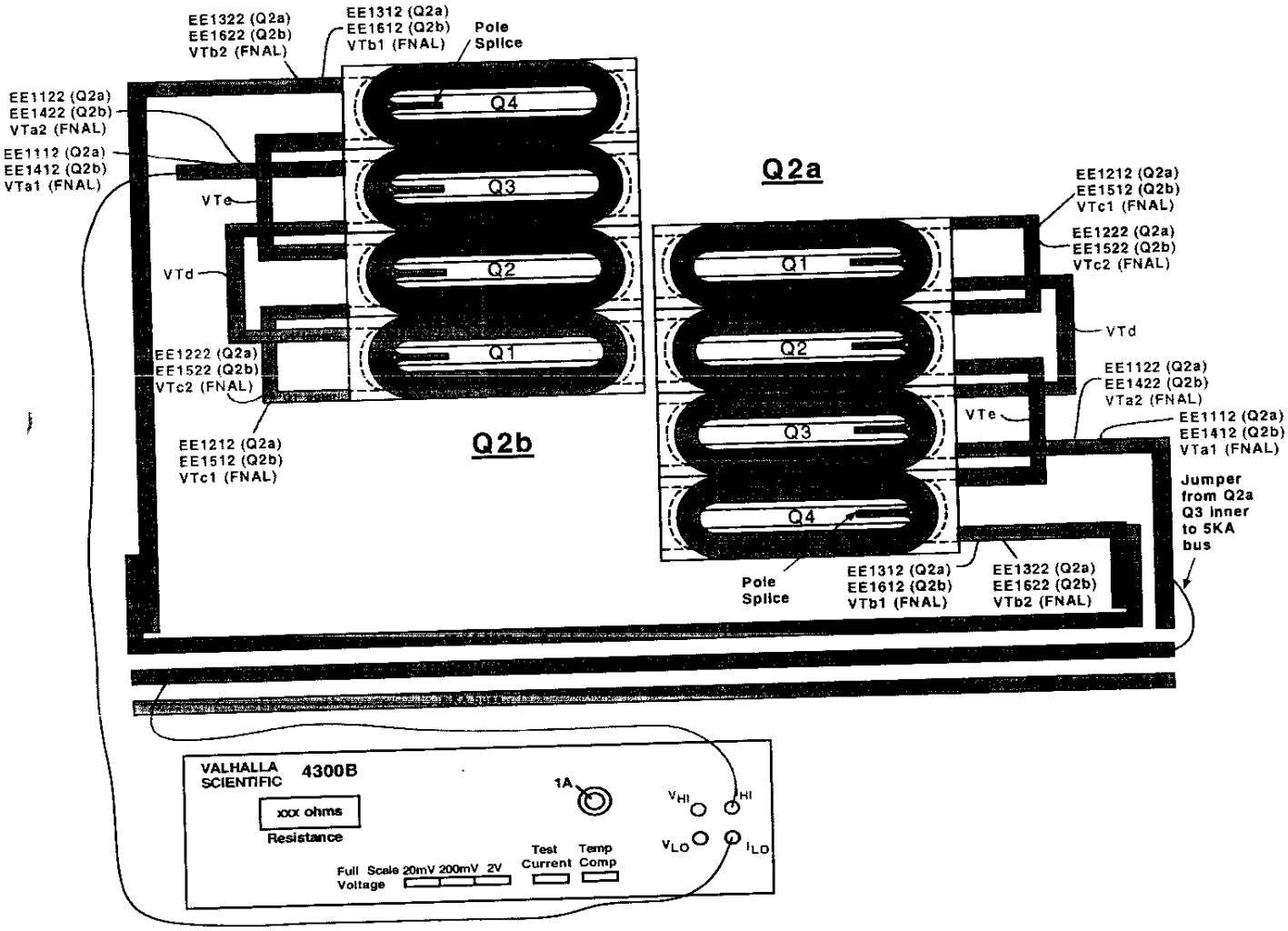

(Q2b) Resistance				Nominal ~ 560 to 585 mΩ
Voltage Tap Serial Numbers				Quadrant Total Resistance
Connect	Fermi	CERN	Quadrant	
V_{HI}	VTc1Q2b	EE1512	Quadrant 1	574.2 Ω
V_{LO}	VTdQ2b	EMPTY		
V_{HI}	VTeQ2b	EMPTY	Quadrant 2	574.1 Ω
V_{LO}	VTc1Q2b	EE1512		
V_{HI}	VTdQ2b	EMPTY	Quadrant 3	574.3 Ω
V_{LO}	VTa1Q2b	EE1412		
V_{HI}	VTb1Q2b	EE1612	Quadrant 4	574.7 Ω
V_{LO}	VTeQ2b	EMPTY		

Set test current to 0.1 Amps for Total Resistance Measurement

V_{HI}	VTb1Q2b	EE1612	Total Cold Mass	Nominal ~ 2.305Ω
V_{LO}	VTa1Q2b	EE1412		2.299 Ω

Technician(s) _____ Date 11/04/05

Check the resistance of the Redundant Voltage Taps.

Q2b Redundant Voltage Taps				
Connect	Fermi	CERN	Resistance	Nominals
V_{HI}	VTc2Q2b	EE1522	1150 mΩ	1120 - 1170 mΩ
V_{LO}	VTa2Q2b	EE1422		
V_{HI}	VTb2Q2b	EE1622	1150 mΩ	1120 - 1170 mΩ
V_{LO}	VTc2Q2b	EE1522		

Technician(s) _____ Date 11/04/05

To measure Ls and Q of a Bussed Q2b:

1. Use Agilent 4263B LCR Meter.
2. Turn power on by pushing line button. Wait 30 seconds until display screen is lit.
3. Recall program #1. To do this, push recall (Rcl), then push #1, then push Enter.
4. Push Auto/Hold button to release hold.
5. Verify that the frequency displayed in the upper right corner of the display screen is 1000 Hz and the level recorded in the lower right corner of the display screen is 1V or 1000 mV.
6. Connect jumper between Q2a/Quadrant 3 inner power lead and 5KA bus as shown in figure.
7. Connect H_{cur} to 5KA bus as shown in figure.
8. Connect L_{cur} to Q2b/Quadrant 3 inner power lead as shown in figure.
9. Connect H_{pot} and L_{pot} buttons to voltage taps as shown below.

To measure Q2b:

- To measure Q1, connect H_{pot} to VTc1 (EE1512 for Q2b), and L_{pot} to VTd.
- To measure Q2, connect H_{pot} to VTe and L_{pot} to VTc1 (EE1512 for Q2b).
- To measure Q3, connect H_{pot} to VTd and L_{pot} to VTa1 (EE1412 for Q2b).
- To measure Q4, connect H_{pot} to VTb1 (EE1612 for Q2b) and L_{pot} to VTe.
- To measure total, connect H_{pot} to VTb1 (EE1612 for Q2b) and L_{pot} to VTa1 (EE1412 for Q2b).

10. Read Ls and Q from display and record in traveler.

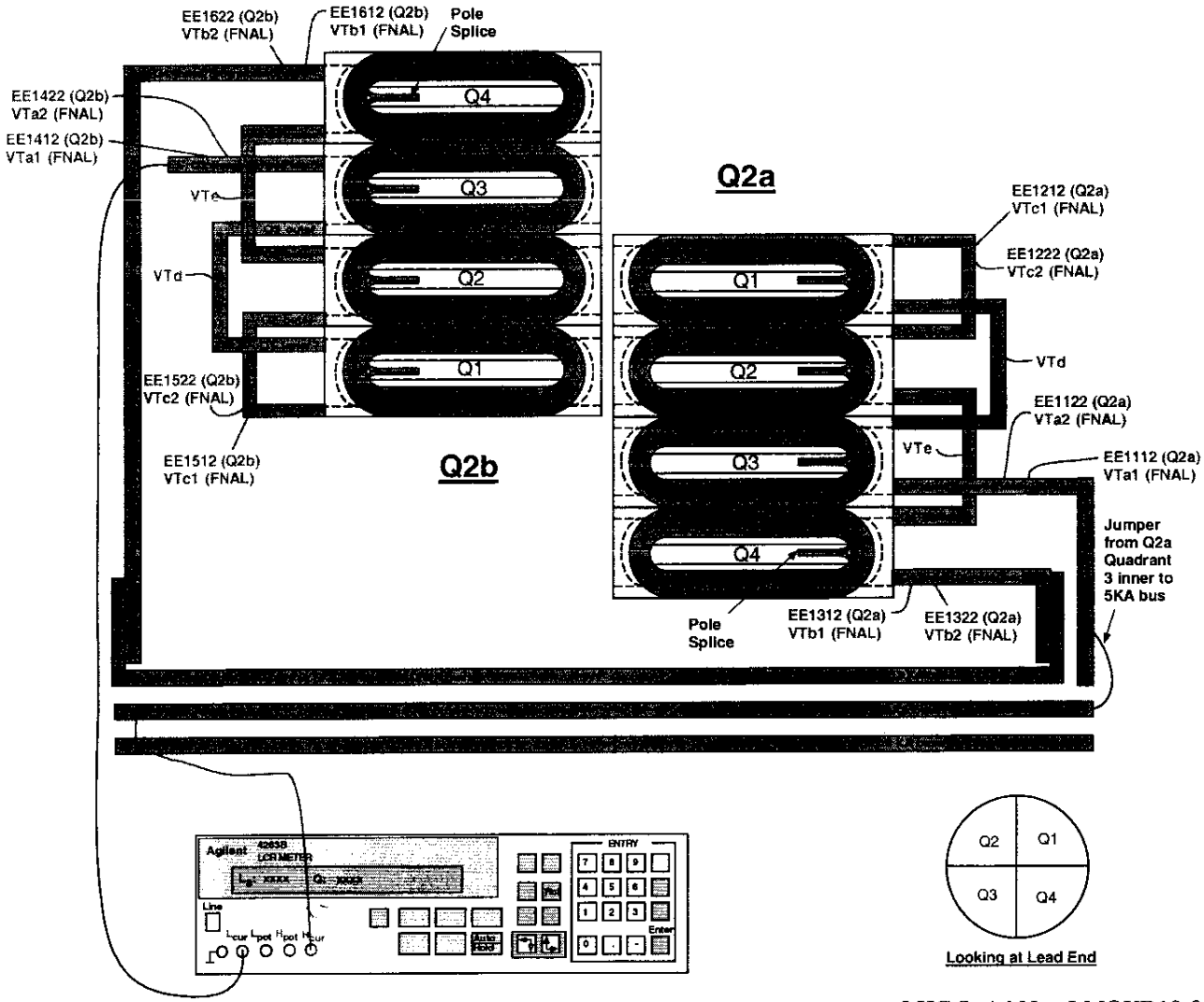

(Q2b) Inductance				Nominal ~ 3.34 to 3.48 mH
Voltage Tap Serial Numbers				Quadrant Total Inductance
Connect	Fermi	CERN	Quadrant	
H_{POT}	VTc1Q2b	EE1512	Quadrant 1	3.3324 mH
L_{POT}	VTdQ2b	EMPTY		
H_{POT}	VTeQ2b	EMPTY	Quadrant 2	3.3361 mH
L_{POT}	VTc1Q2b	EE1512		
RED H_{POT}	VTdQ2b	EMPTY	Quadrant 3	3.2935 mH
BLACK L_{POT}	VTa1Q2b	EE1412		
H_{POT}	VTb1Q2b	EE1612	Quadrant 4	3.3729 mH
L_{POT}	VTeQ2b	EMPTY		

H_{POT}	VTb1Q2b	EE1612	Total Cold Mass	Nominal ~ 13.3376 mH
L_{POT}	VTa1Q2b	EE1412		13.236 mH

(Q2b) Q-Factor				Nominal ~ 3.7 to 4.0
Voltage Tap Serial Numbers				Quadrant Total Q
Connect	Fermi	CERN	Quadrant	
H_{POT}	VTc1Q2b	EE1512	Quadrant 1	4.2
L_{POT}	VTdQ2b	EMPTY		
H_{POT}	VTeQ2b	EMPTY	Quadrant 2	4.2
L_{POT}	VTc1Q2b	EE1512		
H_{POT}	VTdQ2b	EMPTY	Quadrant 3	4.1
L_{POT}	VTa1Q2b	EE1412		
H_{POT}	VTb1Q2b	EE1612	Quadrant 4	4.2
L_{POT}	VTeQ2b	EMPTY		

H_{POT}	VTb1Q2b	EE1612	Total Cold Mass	Nominal ~ 3.7 to 4.0
L_{POT}	VTa1Q2b	EE1412		4.2

Inez Romo
Technician(s)

11/4/05
Date

To measure the resistance of a Thermometer (RTD):

1. Use Hewlett Packard HP3457A digital multimeter.
2. Record temperature of building within +/- 5 degrees.
3. Press line button to turn line on.
4. Connect wires as shown in Figure below.
   U+ (Black) to Sense HI
   I+ (Yellow) to Input HI
   U- (Red) to Sense LO
   I- (Green) to Input LO
5. Push blue button (function key) once.
6. Push OHMF button.
7. Verify arrow in readout is above the 4WΩ (meaning a 4 wire resistance measurement).
8. Read resistance in ohms and record in traveler.

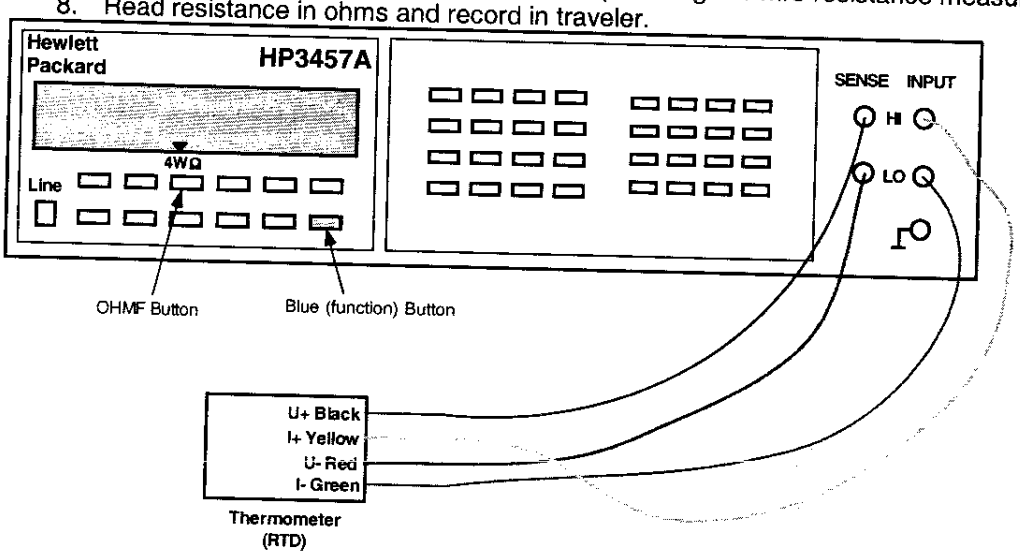

To measure the resistance of a Cryogenic (Warm-up) Heater

1. Use Hewlett Packard HP3457A digital multimeter.
2. Record temperature of building within +/- 5 degrees.
3. Press line button to turn line on.
4. Connect wires as shown in Figure below.
5. Push blue button (function key) once.
6. Push OHMF button.
7. Verify arrow in readout is above the 4WΩ (meaning a 4 wire resistance measurement).
   Note: Although this is technically a 4 wire measurement, it is effectively a 2 wire measurement, since there are only 2 wires connected to each heater.
8. Read resistance in ohms and record in traveler.

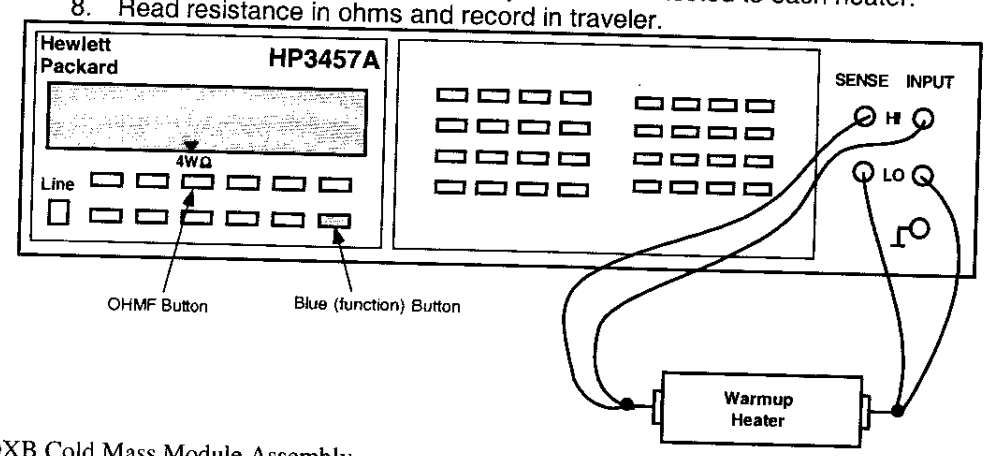

Q2a - RTD's and Cryogenic (warm-up) Heaters				
Temperature of Building (+/- 5°): 76°				
Component	Fermi	CERN	Resistance	Mfr. Resistance (Expedition)
Q2a RTD, primary	TaQ2a	TT8312	65.70 Ω	63.675 Ω
Q2a RTD, redundant	TbQ2a	TT8322	65.895 Ω	63.319 Ω
Q2A Cryogenic (warm-up) Heater (LE) - wire toward cold mass end plate (CERN #1 I+)	W1aQ2A	EH8312+	16.927 Ω	
Q2A Cryogenic (warm-up) Heater (LE) - wire toward cold mass mag center (CERN #1 I-)	W2aQ2A	EH8312-		
Q2A Cryogenic (warm-up) Heater (Non-LE) - wire toward cold mass end plate (CERN #2 I+)	W1bQ2A	EH8322+	16.531 Ω	
Q2A Cryogenic (warm-up) Heater (Non-LE) - wire toward cold mass mag center (CERN #2 I-)	W2bQ2A	EH8322-		

Chris Romero
Technician(s)

11/4/05
Date

Q2b - RTD's and Cryogenic (warm-up) Heaters				
Temperature of Building (+/- 5°): 76°				
Component	Fermi	CERN	Resistance	Mfr. Resistance (Expedition)
Q2b RTD, primary	TaQ2b	TT8332	64.829 Ω	62.595 Ω
Q2b RTD, redundant	TbQ2b	TT8342	70.558 Ω	68.591 Ω
Q2B Cryogenic (warm-up) Heater (LE) - wire toward cold mass end plate (CERN #1 I+)	W1aQ2B	EH8332+	16.204 Ω	
Q2B Cryogenic (warm-up) Heater (LE) - wire toward cold mass mag center (CERN #1 I-)	W2aQ2B	EH8332-		
Q2B Cryogenic (warm-up) Heater (Non-LE) - wire toward cold mass end plate (CERN #2 I+)	W1bQ2B	EH8342+	16.474 Ω	
Q2B Cryogenic (warm-up) Heater (Non-LE) - wire toward cold mass mag center (CERN #2 I-)	W2bQ2B	EH8342-		

Chris Romero / [illegible]
Technician(s)

11/4/05
Date

Using the Hewlett Packard HP3457A digital multimeter, measure the Strip Heater Resistance for Q2a and Q2b.

Q2a Strip Heater Resistance				
Fermi	CERN	Description	Limit	Resistance
H1aQ2a	YT1112+	Circuit A	18.20 to 21Ω	18.862 Ω
H2aQ2a	YT1112-			
H1bQ2a	YT1122+	Circuit B	18.20 to 21Ω	18.888 Ω
H2bQ2a	YT1122-			

Technician(s) Date 11/4/05

Q2b Strip Heater Resistance				
Fermi	CERN	Description	Limit	Resistance
H1aQ2b	YT1132+	Circuit A	18.20 to 21Ω	18.094 Ω
H2aQ2b	YT1132-			
H1bQ2b	YT1142+	Circuit B	18.20 to 21Ω	18.022 Ω
H2bQ2b	YT1142-			

Technician(s) Date 11/4/05

13.2 Using the HP3457A, connect power thru the corrector Power Leads (H2A and H2B to measure Q2-H2 or V2A and V2B to measure Q2-V2). Connect the Sense Leads as shown in table below and record resistance.

Corrector Bus Leads

	V2A	V2B	H2A	H2B
	V1A	V1B	H1A	H1B

(View Looking into Q2b)

Readout Labels		Power Labels	Resistance	Nominals
V2A	EE8112	V2A, V2B	.038 Ω	< 5 Ω
EE8112	V2B		17.292 Ω	> 14 Ω
V2A	V2B		17.327 Ω	18-20 Ω
H2A	EE8122	H2A, H2B	.038 Ω	< 5 Ω
EE8122	H2B		21.286 Ω	> 14 Ω
H2A	H2B		21.323 Ω	21.5-23.5 Ω

Technician(s)

Date 11/04/05

13.3 Check Q1 Instrumentation Bus Wires for Continuity.

Module	Pin	Fermi	CERN	KEK	Description	Done
M2	1	VTa1Q1	EE1111	a1	Q1 Lead Voltage Tap "a", primary	✓
M2	2	VTa2Q1	EE1121	a2	Q1 Lead Voltage Tap "a", redundant	✓
M2	3	VTc1Q1	EE1211	c1	Q1 Center Voltage Tap "c", primary	✓
M2	4	VTc2Q1	EE1221	c2	Q1 Center Voltage Tap "c", redundant	✓
M2	5	VTb1Q1	EE1311	b1	Q1 Lead Voltage Tap "b", primary	✓
M3	5	VTb2Q1	EE1321	b2	Q1 Lead Voltage Tap "b", redundant	✓
M5	1	VTH1	EE8121		Corrector voltage tap Q1-H1 (skew dipole) (on MCBX, MCBXH, A+ lead)	✓
M5	2	VTV1	EE8111		Corrector voltage tap Q1-V1 (normal dipole) (on MCBX, MCBXV A+ lead)	✓
M7	1	W1aQ1	EH8311+		Q1 Cryogenic Heater lead end - wire at top (CERN #1 I+)	✓
M7	2	W2aQ1	EH8311-		Q1 Cryogenic Heater lead end - wire at bottom (CERN #1 I-)	✓
M7	3	W1bQ1	EH8321+		Q1 Cryogenic Heater non-lead end - wire at top (CERN #2 I+)	✓
M7	4	W2bQ1	EH8321-		Q1 Cryogenic Heater non-lead end - wire at bottom (CERN #2 I-)	✓
M9	1	H1aQ1	YT1111+	HA1	Q1 Protection (Strip) Heater, ("a" circuit) (CERN lead #1+)	✓
M9	3	H2aQ1	YT1111-	HA2	Q1Protection (Strip) Heater, ("a" circuit) (CERN lead #1-)	✓
M9	5	H1bQ1	YT1121+	HB1	Q1 Protection (Strip) Heater, ("b" circuit) (CERN lead #2+)	✓
M10	4	H2bQ1	YT1121-	HB2	Q1 Protection (Strip) Heater, ("b" circuit) (CERN lead #2-)	✓
M12	1	TaQ1_I+	TT8311 I+		Q1 RTD, primary Wire color: Yellow	✓
M12	2	TaQ1_I-	TT8311 I-		Q1 RTD, primary Wire color: Green	✓
M12	3	TaQ1_V+	TT8311 U+		Q1 RTD, primary Wire color: Black	✓
M12	4	TaQ1_V-	TT8311 U-		Q1 RTD, primary Wire color: Red	✓
M12	5	TbQ1_I+	TT8321 I+		Q1 RTD, primary Wire color: Yellow	✓
M12	6	TbQ1_I-	TT8321 I-		Q1 RTD, primary Wire color: Green	✓
M12	11	TbQ1_V+	TT8321 U+		Q1 RTD, primary Wire color: Black	✓
M12	10	TbQ1_V-	TT8321 U-		Q1 RTD, primary Wire color: Red	✓

Technician(s) — Date 11/04/05

STOP

Responsible Authority/Physicist — Date 04-NOV-2005

13.4 Hipot according to table below. Hipot to 5kV. Maximum leakage is 3μA.

STOP

Have Crew Chief verify setup and sign below before continuing.

Crew Chief _____ Date 11-9-05

Hipot Heaters to Coil and Ground.

High Potential	Grounded	Floating	Leakage
All Strip Heaters	Coils, Yoke, Q1 Instrumentation Bus, Lead and Corrector Coil Busses, RTD's and Warm-up Heaters	Nothing	2.54 μA

Hipot according to table below. Hipot to 5kV. Maximum leakage is 3μA.

STOP

Have Crew Chief verify setup and sign below before continuing.

Crew Chief _____ Date 11-9-05

NCR # 4309

Hipot Coil to Heaters and Ground.

High Potential	Grounded	Floating	Leakage
All Coils	Strip Heaters, Yoke, Q1 Instrumentation Bus, 8kA and 5kA Lead Busses and Corrector Coil Busses, RTD's and Warm-up Heaters	Nothing	

Technician(s) _____ Date _____

11.0 Dome Installation

Ensure that a protective sleeve is placed inside the bellows between the convolutions and the bracket to prevent damage to the convolutions.

11.2 While feeding the Electrical wires/Bus through the proper ports, reposition the IP End Dome as shown in Q2 Cold Mass Welded Assembly (ME-390309) using the Horizontal Witness Line from step 9.5 as the IP End Dome (MD-390197) is brought into position against the End Plate.

Technician(s) _____ Date 11/18/05

* 11.3 Tack weld the IP End Dome in place at approximately 6-8 places around the Dome per (ME-390309).

Weldor(s) _____ Date 11/11/05

* 11.4 Weld the IP End Dome, skip weld around to minimize distortion per (ME-390309).

Weldor(s) _____ Date 11/11/05

11.5 Reposition the Non-IP End Dome as shown in Q2 Cold Mass Welded Assembly (ME-390309) using the Horizontal Witness Line from step 9.11.

Technician(s) N/A Date _____

11.6 While feeding the Electrical wires/Bus through the proper ports, Reposition the Non-IP End Dome as shown in Q2 Cold Mass Welded Assembly (ME-390309) using the Horizontal Witness Line from step 9.11, as the Non-IP End Dome is brought into position against the End Plate.

Technician(s) N/A Date _____

11.7 Tack weld the Non-IP End Dome in place at approximately 6-8 places around the Dome as per (ME-390309).

Weldor(s) N/A Date _____

11.8 Weld the Non-IP End Dome, skip weld around to minimize distortion as per (ME-390309).

N/A
Weldor(s) Date

11.9 Tack weld the corrector mounting hardware in place as per Q2 Coldmass welded assembly (ME-390309).

N/A
Weldor(s) Date

11.10 If needed, perform a stretched wire measurement of the system, noting the relative position and roll of the three magnetic elements to each other.

Performed Stretch Wire Measurement?

Yes ☐ **No** ☐

N/A
Responsible Authority/Physicist Date

11.11 Mark / Layout and adjust the Shipping Restraint Nuts (MC-390294).

N/A
Technician(s) Date

11.12 Weld the Shipping Restraint Nuts (MC-390294) to the Corrector.

N/A
Weldor(s) Date

11.13 Install and adjust the Shipping Restraint Screws (MC-390230).

N/A
Technician(s) Date

11.14 Weld the Center Body Tube (MC-390112) as per Q2 Cold Mass Welded Assembly (ME-390309). (Weld Specification ES-333781)

N/A
Weldor(s) Date

11.15 Undo the Cold Mass / Cryostat Station Support & Clamping Fixture (ME-369768).

N/A
Technician(s) Date

11.16 Perform a stretched wire measurement of the system to align the Cold Mass within ± .2 mR.

STOP

N/A
Responsible Authority/Physicist Date

12.0 Cold Bore

12.1 Flare both ends of the Beam Tube using Flaring Tool (MC-390416) per Q2 Cold Mass Welded Assembly (MB-390309).

N/A
Technician(s) Date

12.2 Center the Beam Tube in the Cold Mass as close as possible.

N/A
Technician(s) Date

12.3 Measure from the IP End of the Beam Tube to the Spot Face on the IP End Dome. Round to nearest 0.5 mm. Record below.

Record measurement here: _____

N/A
Technician(s) Date

12.4 Measure from the Non-IP End of the Beam Tube to the Spot Face on the Non-IP End Dome. Round to nearest 0.5 mm. Record below.

Record measurement here: _____

N/A
Technician(s) Date

12.5 Add the results from Steps 12.3 and 12.4 above. Record below.

Recorded Measurement from Step 12.3: _____

Recorded Measurement from Step 12.4: + _____

Result: _____

N/A
Technician(s) Date

12.6 Subtract 30mm from the number recorded in Step 12.5. Record below.

Result from Step 12.5: _____

Subtract: **- 30mm**

Result: _____

N/A
Technician(s) Date

12.7 Divide the result from Step 12.6 by 2. This is the Spacer width for both the IP End and the Non-IP End. Make two spacers this size. Record below.

Result from step 12.6: _____

Divide: **÷ 2**

Spacer width for each end: _____

N/A
Technician(s) _____ Date _____

12.8 Weld the spacers from step 12.7 to the beam tube flanges, part number 390300.

N/A
Weldor(s) _____ Date _____

X 12.9 Position Cold Bore Flange (MC-390300) over the Beam Tube and onto IP End Dome (Q2a) per Q2 Cold Mass Welded Assembly (MB-390309).

N/A
Technician(s) _____ Date _____

X 12.10 Weld the Beam Tube to the Flange at IP End as per Q2 Cold Mass Welded Assembly (ME-390309).

N/A
Weldor(s) _____ Date _____

12.11 Position the Cold Bore Flange (MC-390300) over the Beam Tube and onto the Non-IP End Dome (Q2b) per Q2 Cold Mass Welded Assembly (MB-390309).

N/A
Technician(s) _____ Date _____

12.12 Weld Beam Tube to Flange at NON-IP End as per Q2 Cold Mass Welded Assembly (ME-390309).

N/A
Weldor(s) Date

12.13 Perform a Stretched Wire Verification Measurement.

STOP

Responsible Authority/Physicist 11/11/05
Date

* 12.14 Align Beam Tube and the Flange at IP End per Q2 Cold Mass Welded Assembly (MB-390309).

Technician(s) 11/11/05
Date

* 12.15 Weld the Flange to the IP End Dome as per Q2 Cold Mass Welded Assembly (ME-390309).

Weldor(s) 11/11/05
Date

12.16 Align Beam Tube and Flange at NON-IP End per Q2 Cold Mass Welded Assembly (MB-390309).

N/A
Technician(s) Date

12.17 Weld the Flange to the Non-IP End Dome as per Q2 Cold Mass Welded Assembly (ME-390309).

N/A
Weldor(s) Date

13.0 Electrical Inspection

13.1 Perform an electrical inspection on each of the Individual Quadrants and the Cold Masses. Refer to the Valhalla and Leader Free Standing Coil Measurement Procedure (ES-292306).

To measure the resistance of a bussed Q2:

1. Use Valhalla Scientific 4300B digital micro-ohmmeter.
2. Set Test Current to 1 amp.
3. Set Scale to 2V full scale.
4. Turn temperature compensation on.
5. Turn test current off.
6. Put jumper between Q2a Q3 inner power lead and 5 KA bus as shown in figure.
7. Connect I_{HI} to the 5KA bus (Q2a Q3 inner power lead) as shown in figure.
8. Connect I_{LO} to the Q2b Q3 inner power lead as shown in figure.
9. Turn test current on.
10. Connect V_{HI} and V_{LO} to voltage taps as shown below.
11. Read resistance and record in traveler.

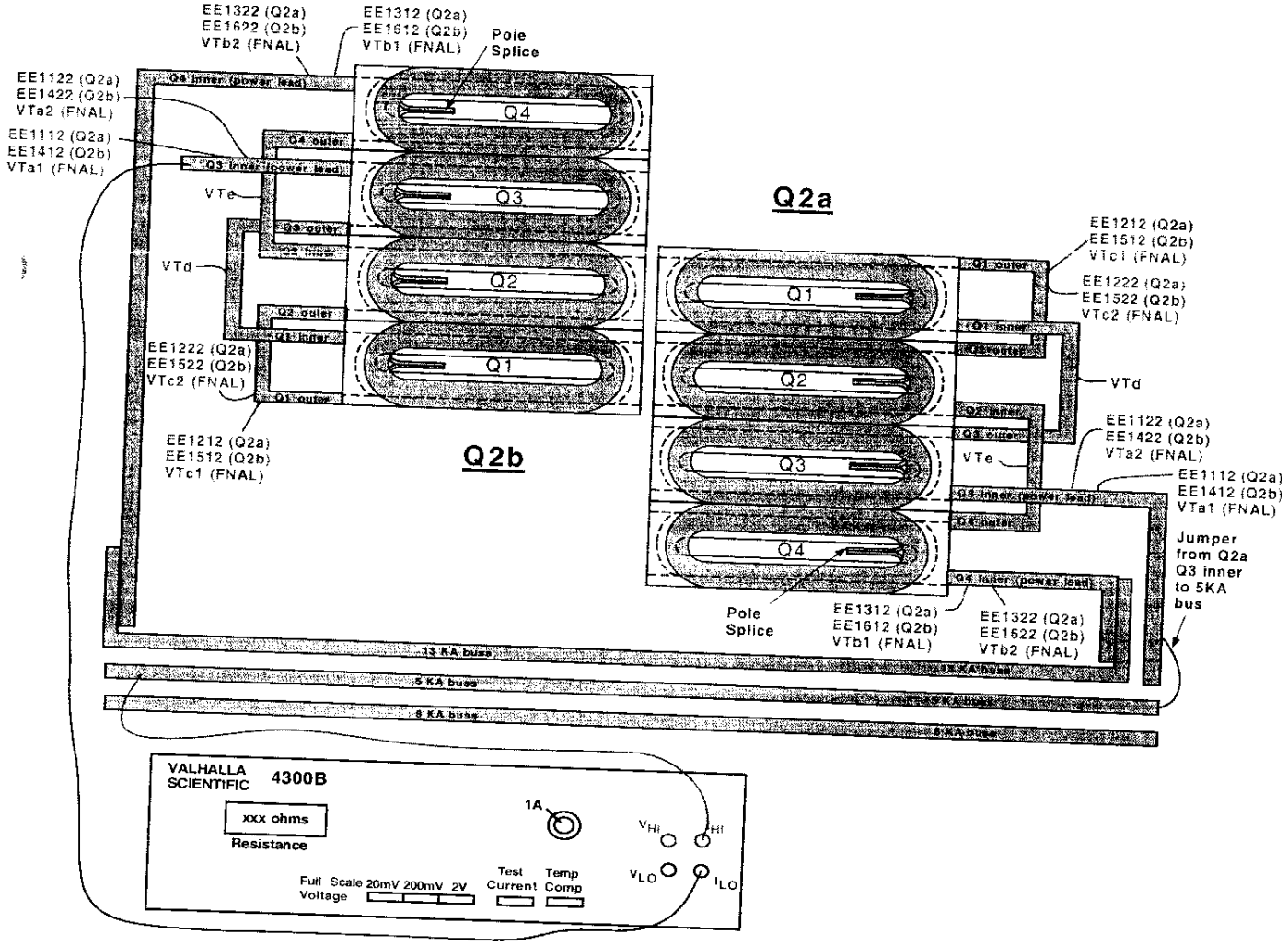

(Q2a) Resistance				Nominal ~ 560 to 585 mΩ
Voltage Tap Serial Numbers				Quadrant Total Resistance
Connect	Fermi	CERN	Quadrant	
V_{HI}	VTdQ2a	EMPTY	Quadrant 1	575.4 mΩ
V_{LO}	VTc1Q2a	EE1212		
V_{HI}	VTc1Q2a	EE1212	Quadrant 2	574.1 mΩ
V_{LO}	VTeQ2a	EMPTY		
V_{HI}	VTa1Q2a	EE1112	Quadrant 3	575.4 mΩ
V_{LO}	VTdQ2a	EMPTY		
V_{HI}	VTeQ2a	EMPTY	Quadrant 4	575.2 mΩ
V_{LO}	VTb1Q2a	EE1312		

Set test current to 0.1 Amps for Total Resistance Measurement

V_{HI}	VTa1Q2a	EE1112	Total Cold Mass	Nominal ~ 2.305Ω
V_{LO}	VTb1Q2a	EE1312		2.301 Ω

A Gould
Technician(s)

11/11/05
Date

Check resistance of Redundant Voltage Taps.

Q2a Redundant Voltage Taps				
Connect	Fermi	CERN	Resistance	Nominals
V_{HI}	VTa2Q2a	EE1122	1150.7 mΩ	1120 - 1170 mΩ
V_{LO}	VTc2Q2a	EE1222		
V_{HI}	VTc2Q2a	EE1222	1149.1 mΩ	1120 - 1170 mΩ
V_{LO}	VTb2Q2a	EE1322		

A Gould
Technician(s)

11/11/05
Date

To measure Ls and Q of a Bussed Q2a:

1. Use Agilent 4263B LCR Meter.
2. Turn power on by pushing Line button. Wait 30 seconds until display screen is lit.
3. Recall program #1. To do this, push recall (Rcl), then push the #1, then push Enter.
4. Push Auto/Hold button to release hold.
5. Verify that the frequency displayed in the upper right corner of the display screen is 1000 Hz and the level recorded in the lower right corner of the display screen is 1V or 1000 mV.
6. Connect jumper between Q2a/Quadrant 3 inner power lead and 5KA bus as shown in figure.
7. Connect H_{cur} to Q2b/Quadrant 3 inner power lead as shown in figure.
8. Connect L_{cur} to 5KA bus as shown in figure.
9. Connect H_{pot} and L_{pot} buttons to voltage taps as shown below.

To measure Q2a:

- To measure Q1, connect H_{pot} to VTc1 (EE1212 for Q2a), and L_{pot} to VTd.
- To measure Q2, connect H_{pot} to VTe, and L_{pot} to VTc1 (EE1212 for Q2a).
- To measure Q3, connect H_{pot} to VTd and L_{pot} to VTa1 (EE1112 for Q2a).
- To measure Q4, connect H_{pot} to VTb1 (EE1312 for Q2a), and L_{pot} to VTe.
- To measure total, connect H_{pot} to VTb1 (EE1312 for Q2a), and L_{pot} to VTa1 (EE1112 for Q2a).

10. Read Ls and Q from display and record in traveler.

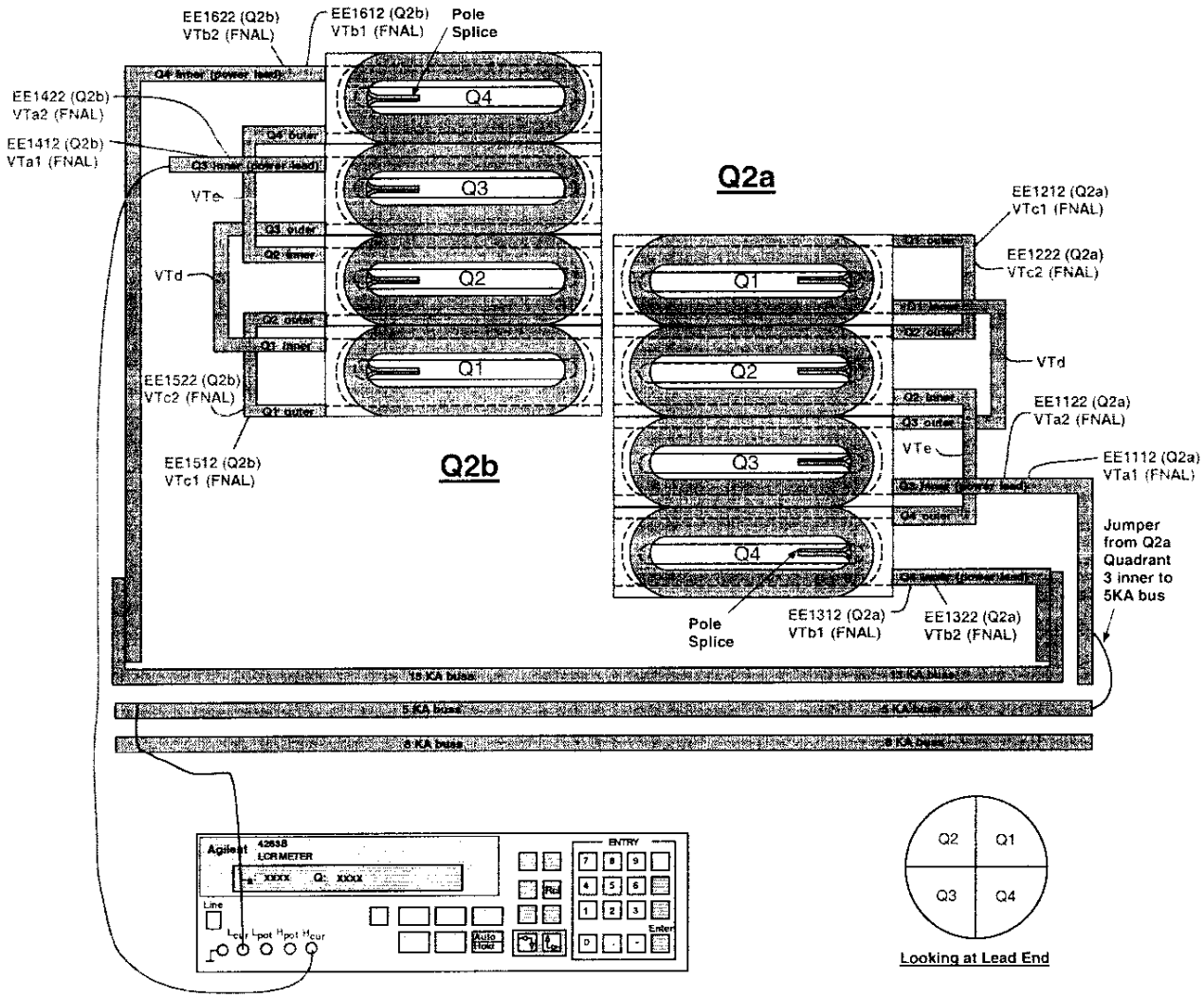

(Q2a) Inductance				Nominal ~ 3.34 to 3.48 mH
Voltage Tap Serial Numbers				Quadrant Total Inductance
Connect	Fermi	CERN	Quadrant	
L_{POT}	VTdQ2a	EMPTY	Quadrant 1	3.49 mH
H_{POT}	VTc1Q2a	EE1212		
L_{POT}	VTc1Q2a	EE1212	Quadrant 2	3.49 mH
H_{POT}	VTeQ2a	EMPTY		
L_{POT}	VTdQ2a	EMPTY	Quadrant 3	3.46 mH
H_{POT}	VTa1Q2a	EE1112		
L_{POT}	VTeQ2a	EMPTY	Quadrant 4	3.49 mH
H_{POT}	VTb1Q2a	EE1312		

L_{POT}	VTa1Q2a	EE1112	Total Cold Mass	Nominal ~ 13.3376 mH
H_{POT}	VTb1Q2a	EE1312		13.949 mH

(Q2a) Q-Factor				Nominal ~ 3.7 to 4.0
Voltage Tap Serial Numbers				Quadrant Total Q
Connect	Fermi	CERN	Quadrant	
L_{POT}	VTdQ2a	EMPTY	Quadrant 1	3.7
H_{POT}	VTc1Q2a	EE1212		
L_{POT}	VTc1Q2a	EE1212	Quadrant 2	3.8
H_{POT}	VTeQ2a	EMPTY		
L_{POT}	VTa1Q2a	EE1112	Quadrant 3	3.9
H_{POT}	VTdQ2a	EMPTY		
L_{POT}	VTeQ2a	EMPTY	Quadrant 4	3.7
H_{POT}	VTb1Q2a	EE1312		

L_{POT}	VTa1Q2a	EE1112	Total Cold Mass	Nominal ~ 3.7 to 4.0
H_{POT}	VTb1Q2a	EE1312		3.8

Technician(s)

11/11/05
Date

To measure the resistance of a bussed Q2:

1. Use Valhalla Scientific 4300B digital micro-ohmmeter.
2. Set Test Current to 1 amp.
3. Set Scale to 2V full scale.
4. Turn temperature compensation on.
5. Turn test current off.
6. Put jumper between Q2a Q3 inner power lead and 5 KA bus as shown in figure.
7. Connect I_{HI} to the 5KA bus (Q2a Q3 inner power lead) as shown in figure.
8. Connect I_{LO} to the Q2b Q3 inner power lead as shown in figure.
9. Turn test current on.
10. Connect V_{HI} and V_{LO} to voltage taps as shown below.
11. Read resistance and record in traveler.

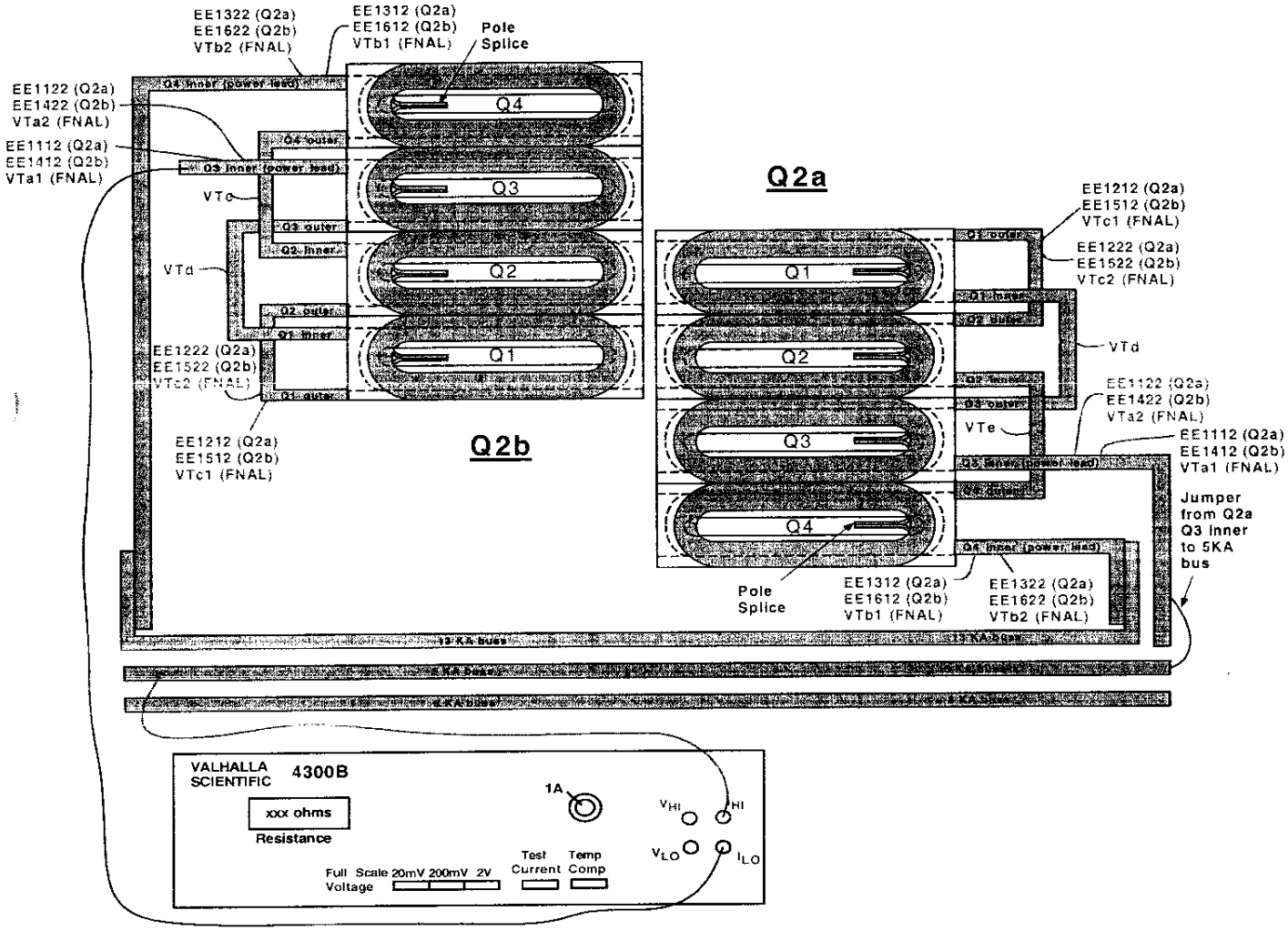

(Q2b) Resistance				Nominal ~ 560 to 585 mΩ
Voltage Tap Serial Numbers				Quadrant Total Resistance
Connect	Fermi	CERN	Quadrant	
V_{HI}	VTc1Q2b	EE1512	Quadrant 1	572.8 Ω
V_{LO}	VTdQ2b	EMPTY		
V_{HI}	VTeQ2b	EMPTY	Quadrant 2	572.7 Ω
V_{LO}	VTc1Q2b	EE1512		
V_{HI}	VTdQ2b	EMPTY	Quadrant 3	573.1 Ω
V_{LO}	VTa1Q2b	EE1412		
V_{HI}	VTb1Q2b	EE1612	Quadrant 4	573.2 Ω
V_{LO}	VTeQ2b	EMPTY		

Set test current to 0.1 Amps for Total Resistance Measurement

V_{HI}	VTb1Q2b	EE1612	Total Cold Mass	Nominal ~ 2.305Ω
V_{LO}	VTa1Q2b	EE1412		2.293 Ω

Technician(s) Date 11/11/05

Check the resistance of the Redundant Voltage Taps.

Q2b Redundant Voltage Taps				
Connect	Fermi	CERN	Resistance	Nominals
V_{HI}	VTc2Q2b	EE1522	1145.9 mΩ	1120 - 1170 mΩ
V_{LO}	VTa2Q2b	EE1422		
V_{HI}	VTb2Q2b	EE1622	1145.9 mΩ	1120 - 1170 mΩ
V_{LO}	VTc2Q2b	EE1522		

Technician(s) Date 11/11/05

To measure Ls and Q of a Bussed Q2b:

1. Use Agilent 4263B LCR Meter.
2. Turn power on by pushing line button. Wait 30 seconds until display screen is lit.
3. Recall program #1. To do this, push recall (Rcl), then push #1, then push Enter.
4. Push Auto/Hold button to release hold.
5. Verify that the frequency displayed in the upper right corner of the display screen is 1000 Hz and the level recorded in the lower right corner of the display screen is 1V or 1000 mV.
6. Connect jumper between Q2a/Quadrant 3 inner power lead and 5KA bus as shown in figure.
7. Connect H_{cur} to 5KA bus as shown in figure.
8. Connect L_{cur} to Q2b/Quadrant 3 inner power lead as shown in figure.
9. Connect H_{pot} and L_{pot} buttons to voltage taps as shown below.

To measure Q2b:

- To measure Q1, connect H_{pot} to VTc1 (EE1512 for Q2b), and L_{pot} to VTd.
- To measure Q2, connect H_{pot} to VTe and L_{pot} to VTc1 (EE1512 for Q2b).
- To measure Q3, connect H_{pot} to VTd and L_{pot} to VTa1 (EE1412 for Q2b).
- To measure Q4, connect H_{pot} to VTb1 (EE1612 for Q2b) and L_{pot} to VTe.
- To measure total, connect H_{pot} to VTb1 (EE1612 for Q2b) and L_{pot} to VTa1 (EE1412 for Q2b).

10. Read Ls and Q from display and record in traveler.

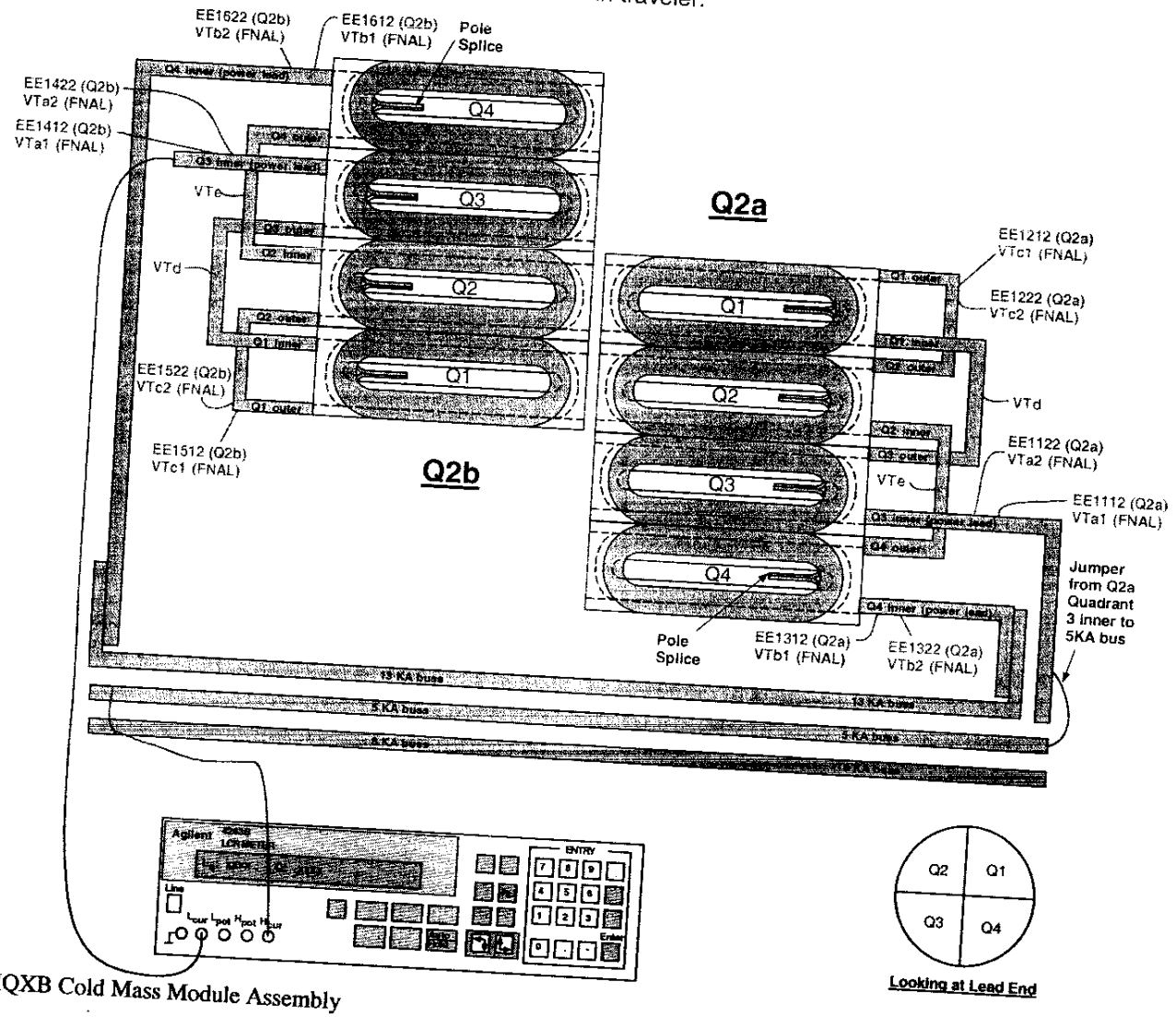

Q2 LMQXB Cold Mass Module Assembly

LHC Serial No.: LMQXB10-1
Notes: Re-issued per DR No. 4309.

(Q2b) Inductance				Nominal ~ 3.34 to 3.48 mH
Voltage Tap Serial Numbers				Quadrant Total Inductance
Connect	Fermi	CERN	Quadrant	
H_{POT}	VTc1Q2b	EE1512	Quadrant 1	3.42 mH
L_{POT}	VTdQ2b	EMPTY		
H_{POT}	VTeQ2b	EMPTY	Quadrant 2	3.43 mH
L_{POT}	VTc1Q2b	EE1512		
H_{POT}	VTdQ2b	EMPTY	Quadrant 3	3.37 mH
L_{POT}	VTa1Q2b	EE1412		
H_{POT}	VTb1Q2b	EE1612	Quadrant 4	3.41 mH
L_{POT}	VTeQ2b	EMPTY		

				Nominal ~ 13.3376 mH
H_{POT}	VTb1Q2b	EE1612	Total Cold Mass	13.648 mH
L_{POT}	VTa1Q2b	EE1412		

(Q2b) Q-Factor				Nominal ~ 3.7 to 4.0
Voltage Tap Serial Numbers				Quadrant Total Q
Connect	Fermi	CERN	Quadrant	
H_{POT}	VTc1Q2b	EE1512	Quadrant 1	3.8
L_{POT}	VTdQ2b	EMPTY		
H_{POT}	VTeQ2b	EMPTY	Quadrant 2	3.9
L_{POT}	VTc1Q2b	EE1512		
H_{POT}	VTdQ2b	EMPTY	Quadrant 3	3.8
L_{POT}	VTa1Q2b	EE1412		
H_{POT}	VTb1Q2b	EE1612	Quadrant 4	3.7
L_{POT}	VTeQ2b	EMPTY		

				Nominal ~ 3.7 to 4.0
H_{POT}	VTb1Q2b	EE1612	Total Cold Mass	3.8
L_{POT}	VTa1Q2b	EE1412		

Technician(s)

11/11/05
Date

To measure the resistance of a Thermometer (RTD):

1. Use Hewlett Packard HP3457A digital multimeter.
2. Record temperature of building within +/- 5 degrees.
3. Press line button to turn line on.
4. Connect wires as shown in Figure below.
   U+ (Black) to Sense HI
   I+ (Yellow) to Input HI
   U- (Red) to Sense LO
   I- (Green) to Input LO
5. Push blue button (function key) once.
6. Push OHMF button.
7. Verify arrow in readout is above the 4WΩ (meaning a 4 wire resistance measurement).
8. Read resistance in ohms and record in traveler.

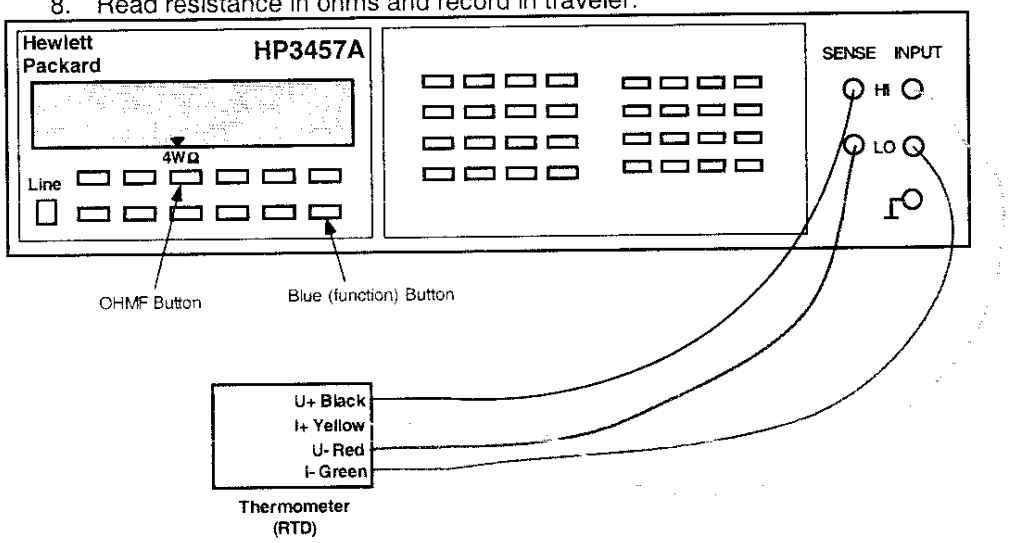

To measure the resistance of a Cryogenic (Warm-up) Heater

1. Use Hewlett Packard HP3457A digital multimeter.
2. Record temperature of building within +/- 5 degrees.
3. Press line button to turn line on.
4. Connect wires as shown in Figure below.
5. Push blue button (function key) once.
6. Push OHMF button.
7. Verify arrow in readout is above the 4WΩ (meaning a 4 wire resistance measurement).
   Note: Although this is technically a 4 wire measurement, it is effectively a 2 wire measurement, since there are only 2 wires connected to each heater.
8. Read resistance in ohms and record in traveler.

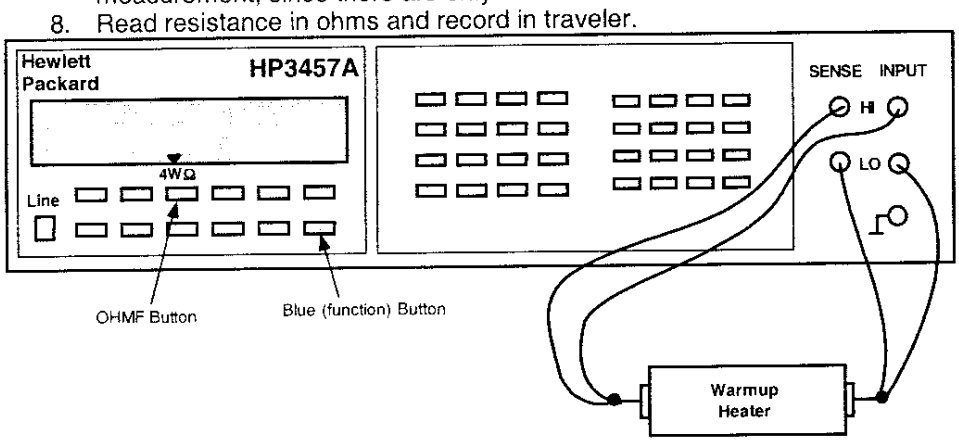

Q2a - RTD's and Cryogenic (warm-up) Heaters				
Temperature of Building (+/- 5°): 70°				
Component	**Fermi**	**CERN**	**Resistance**	**Mfr. Resistance (Expedition)**
Q2a RTD, primary	TaQ2a	TT8312	65.974 Ω	63.675 Ω
Q2a RTD, redundant	TbQ2a	TT8322	66.149 Ω	63.319 Ω
Q2A Cryogenic (warm-up) Heater (LE) - wire toward cold mass end plate (CERN #1 I+)	W1aQ2A	EH8312+	16.921 Ω	
Q2A Cryogenic (warm-up) Heater (LE) - wire toward cold mass mag center (CERN #1 I-)	W2aQ2A	EH8312-		
Q2A Cryogenic (warm-up) Heater (Non-LE) - wire toward cold mass end plate (CERN #2 I+)	W1bQ2A	EH8322+	16.526 Ω	
Q2A Cryogenic (warm-up) Heater (Non-LE) - wire toward cold mass mag center (CERN #2 I-)	W2bQ2A	EH8322-		

A Gould
Technician(s)

11/11/05
Date

Q2b - RTD's and Cryogenic (warm-up) Heaters				
Temperature of Building (+/- 5°): 70°				
Component	**Fermi**	**CERN**	**Resistance**	**Mfr. Resistance (Expedition)**
Q2b RTD, primary	TaQ2b	TT8332	65.012 Ω	62.595 Ω
Q2b RTD, redundant	TbQ2b	TT8342	70.747 Ω	68.581 Ω
Q2B Cryogenic (warm-up) Heater (LE) - wire toward cold mass end plate (CERN #1 I+)	W1aQ2B	EH8332+	16.212 Ω	
Q2B Cryogenic (warm-up) Heater (LE) - wire toward cold mass mag center (CERN #1 I-)	W2aQ2B	EH8332-		
Q2B Cryogenic (warm-up) Heater (Non-LE) - wire toward cold mass end plate (CERN #2 I+)	W1bQ2B	EH8342+	16.471 Ω	
Q2B Cryogenic (warm-up) Heater (Non-LE) - wire toward cold mass mag center (CERN #2 I-)	W2bQ2B	EH8342-		

A Gould
Technician(s)

11/11/05
Date

Using the Hewlett Packard HP3457A digital multimeter, measure the Strip Heater Resistance for Q2a and Q2b.

Q2a Strip Heater Resistance				
Fermi	CERN	Description	Limit	Resistance
H1aQ2a	YT1112+	Circuit A	18.20 to 21Ω	18.8403 Ω
H2aQ2a	YT1112-			
H1bQ2a	YT1122+	Circuit B	18.20 to 21Ω	18.8628 Ω
H2bQ2a	YT1122-			

Technician(s) _____ Date 11/11/05

Q2b Strip Heater Resistance				
Fermi	CERN	Description	Limit	Resistance
H1aQ2b	YT1132+	Circuit A	18.20 to 21Ω	18.0728 Ω
H2aQ2b	YT1132-			
H1bQ2b	YT1142+	Circuit B	18.20 to 21Ω	17.9776 Ω
H2bQ2b	YT1142-			

Technician(s) _____ Date 11/11/05

13.2 Using the HP3457A, connect power thru the corrector Power Leads (H2A and H2B to measure Q2-H2 or V2A and V2B to measure Q2-V2). Connect the Sense Leads as shown in table below and record resistance.

Corrector Bus Leads

	V2A	V2B	H2A	H2B
	V1A	V1B	H1A	H1B

(View Looking into Q2b)

Readout Labels		Power Labels	Resistance	Nominals
V2A	EE8112	V2A, V2B	.03 Ω	< 5 Ω
EE8112	V2B		17.222 Ω	> 14 Ω
V2A	V2B		17.247 Ω	18-20 Ω
H2A	EE8122	H2A, H2B	.02 Ω	< 5 Ω
EE8122	H2B		21.207 Ω	> 14 Ω
H2A	H2B		21.228 Ω	21.5-23.5 Ω

Technician(s) _____ Date 11/11/05

13.3 Check Q1 Instrumentation Bus Wires for Continuity.

Module	Pin	Fermi	CERN	KEK	Description	Done
M2	1	VTa1Q1	EE1111	a1	Q1 Lead Voltage Tap "a", primary	✓
M2	2	VTa2Q1	EE1121	a2	Q1 Lead Voltage Tap "a", redundant	✓
M2	3	VTc1Q1	EE1211	c1	Q1 Center Voltage Tap "c", primary	✓
M2	4	VTc2Q1	EE1221	c2	Q1 Center Voltage Tap "c", redundant	✓
M2	5	VTb1Q1	EE1311	b1	Q1 Lead Voltage Tap "b", primary	✓
M3	5	VTb2Q1	EE1321	b2	Q1 Lead Voltage Tap "b", redundant	✓
M5	1	VTH1	EE8121		Corrector voltage tap Q1-H1 (skew dipole) (on MCBX, MCBXH, A+ lead)	✓
M5	2	VTV1	EE8111		Corrector voltage tap Q1-V1 (normal dipole) (on MCBX, MCBXV A+ lead)	✓
M7	1	W1aQ1	EH8311+		Q1 Cryogenic Heater lead end - wire at top (CERN #1 I+)	✓
M7	2	W2aQ1	EH8311-		Q1 Cryogenic Heater lead end - wire at bottom (CERN #1 I-)	✓
M7	3	W1bQ1	EH8321+		Q1 Cryogenic Heater non-lead end - wire at top (CERN #2 I+)	✓
M7	4	W2bQ1	EH8321-		Q1 Cryogenic Heater non-lead end - wire at bottom (CERN #2 I-)	✓
M9	1	H1aQ1	YT1111+	HA1	Q1 Protection (Strip) Heater, ("a" circuit) (CERN lead #1+)	✓
M9	3	H2aQ1	YT1111-	HA2	Q1Protection (Strip) Heater, ("a" circuit) (CERN lead #1-)	✓
M9	5	H1bQ1	YT1121+	HB1	Q1 Protection (Strip) Heater, ("b" circuit) (CERN lead #2+)	✓
M10	4	H2bQ1	YT1121-	HB2	Q1 Protection (Strip) Heater, ("b" circuit) (CERN lead #2-)	✓
M12	1	TaQ1_I+	TT8311 I+		Q1 RTD, primary Wire color: Yellow	✓
M12	2	TaQ1_I-	TT8311 I-		Q1 RTD, primary Wire color: Green	✓
M12	3	TaQ1_V+	TT8311 U+		Q1 RTD, primary Wire color: Black	✓
M12	4	TaQ1_V-	TT8311 U-		Q1 RTD, primary Wire color: Red	✓
M12	5	TbQ1_I+	TT8321 I+		Q1 RTD, primary Wire color: Yellow	✓
M12	6	TbQ1_I-	TT8321 I-		Q1 RTD, primary Wire color: Green	✓
M12	11	TbQ1_V+	TT8321 U+		Q1 RTD, primary Wire color: Black	✓
M12	10	TbQ1_V-	TT8321 U-		Q1 RTD, primary Wire color: Red	✓

Technician(s) — Date: 11/11/05

STOP

Responsible Authority/Physicist — Date: 15-NOV-2005

13.4 Hipot according to table below. Hipot to 5kV. Maximum leakage is 3μA.

STOP

Have Crew Chief verify setup and sign below before continuing.

Crew Chief _____ Date _____

Hipot Heaters to Coil and Ground.

High Potential	Grounded	Floating	Leakage
All Strip Heaters	Coils, Yoke, Q1 Instrumentation Bus, Lead and Corrector Coil Busses, RTD's and Warm-up Heaters	Nothing	1.73μA

Hipot according to table below. Hipot to 5kV. Maximum leakage is 3μA.

STOP

Have Crew Chief verify setup and sign below before continuing.

Crew Chief _____ Date _____

Hipot Coil to Heaters and Ground.

High Potential	Grounded	Floating	Leakage
All Coils	Strip Heaters, Yoke, Q1 Instrumentation Bus, 8kA and 5kA Lead Busses and Corrector Coil Busses, RTD's and Warm-up Heaters	Nothing	275nA

DR 180

NEED TO ADD THIS SIGN-OFF!

Technician(s) _____ Date 11/11/05

RESPONSIBLE AUTH. / PHYSICIST _____ DATE 11/11/05

14.0 Installation of Hypertronics

14.1 Install Hypertronics Connectors at **Q2a** end as per Q2 Cold Mass Welded Assembly (ME-390309) and Hypertronics Connector Assembly Q2 Magnet Return End (MB-418133). Pin Numbers for connectors are shown in Table 14.1 below.

Table 14.1

Q2 connector (ip, or Q2a end) for Q1-Q2 connection. Completed on 11-20-03.					
Module	**Pin**	**Fermilab Label**	**CERN Label**	**KEK Label**	**Description**
M1	1				Blank Module
M1	2				
M1	3				
M1	4				
M1	5				
M2	1	VTa1Q1	EE1111	a1	Q1 Lead Voltage Tap "a", primary
M2	2	VTa2Q1	EE1121	a2	Q1 Lead Voltage Tap "a",redundant
M2	3	VTc1Q1	EE1211	c1	Q1 Center Voltage Tap "c", primary
M2	4	VTc2Q1	EE1221	c2	Q1 Center Voltage Tap "c", redundant
M2	5	VTb1Q1	EE1311	b1	Q1 Lead Voltage Tap "b", primary
M3	1	Empty	Empty		No Connection
M3	2	Empty	Empty		No Connection
M3	3	Empty	Empty		No Connection
M3	4	Empty	Empty		No Connection
M3	5	VTb2Q1	EE1321	b2	Q1 Lead Voltage Tap "b",redundant
M4	1				Blank Module
M4	2				
M4	3				
M4	4				
M4	5				
M5	1	VTH1	EE8121		Corrector voltage tap Q1-H1 (skew dipole) (on MCBX, MCBXH, A+ lead)
M5	2	VTV1	EE8111		Corrector voltage tap Q1-V1 (normal dipole) (on MCBX, MCBXV A+ lead)
M5	3	Empty	Empty		No Connection
M5	4	Empty	Empty		No Connection
M5	5	Empty	Empty		No Connection

Table 14.1

Module	Pin	Fermilab Label	CERN Label	KEK Label	Description
M6	1				Blank Module
M6	2				
M6	3				
M6	4				
M6	5				
M7	1	W1aQ1	EH8311+		Q1 Cryogenic Heater lead end - wire at top (CERN #1 I+)
M7	2	W2aQ1	EH8311-		Q1 Cryogenic Heater lead end - wire at bottom (CERN #1 I-)
M7	3	W1bQ1	EH8321+		Q1 Cryogenic Heater non-lead end - wire at top (CERN #2 I+)
M7	4	W2bQ1	EH8321-		Q1 Cryogenic Heater non-lead end - wire at bottom (CERN #2 I-)
M7	5	Empty	Empty		No connection
M8	1				Blank Module
M8	2				
M8	3				
M8	4				
M8	5				
M9	1	H1aQ1	YT1111+	HA1	Q1 Protection (Strip) Heater, ("a" circuit) (CERN lead #1+)
M9	2	Empty	Empty		No connection
M9	3	H2aQ1	YT1111-	HA2	Q1Protection (Strip) Heater, ("a" circuit) (CERN lead #1-)
M9	4	Empty	Empty		No connection
M9	5	H1bQ1	YT1121+	HB1	Q1 Protection (Strip) Heater, ("b" circuit) (CERN lead #2+)
M10	1	Empty	Empty		No Connection
M10	2	Empty	Empty		No Connection
M10	3	Empty	Empty		No Connection
M10	4	H2bQ1	YT1121-	HB2	Q1 Protection (Strip) Heater, ("b" circuit) (CERN lead #2-)
M10	5	Empty	Empty		No Connection

Table 14.1

Module	Pin	Fermilab Label	CERN Label	KEK Label	Description
M11	1				Blank Module
M11	2				
M11	3				
M11	4				
M11	5				
Note: Pin numbers of Module M12 are not listed in numerical order					
M12	1	TaQ1_I+	TT8311 I+		Q1 RTD, primary Wire color: Yellow
M12	2	TaQ1_I-	TT8311 I-		Q1 RTD, primary Wire color: Green
M12	3	TaQ1_V+	TT8311 U+		Q1 RTD, primary Wire color: Black
M12	4	TaQ1_V-	TT8311 U-		Q1 RTD, primary Wire color: Red
M12	5	TbQ1_I+	TT8321 I+		Q1 RTD, redundant: Wire color: Yellow
M12	6	TbQ1_I-	TT8321 I-		Q1 RTD, redundant: Wire color: Green
M12	11	TbQ1_V+	TT8321 U+		Q1 RTD, redundant: Wire color: Black
M12	10	TbQ1_V-	TT8321 U-		Q1 RTD, redundant: Wire color: Red
M12	9	Empty	Empty		No connection
M12	8	Empty	Empty		No connection
M12	7	Empty	Empty		No connection
M12	12	Empty	Empty		No connection
M12	13	Empty	Empty		No connection
M12	14	Empty	Empty		No connection
M12	15	Empty	Empty		No connection
M12	16	Empty	Empty		No connection
M12	17	Empty	Empty		No connection

Hypertronics Connector Pin Locations for Q2 (ip, or Q2a end)
VIEW: Female (receptacle) solder cup side

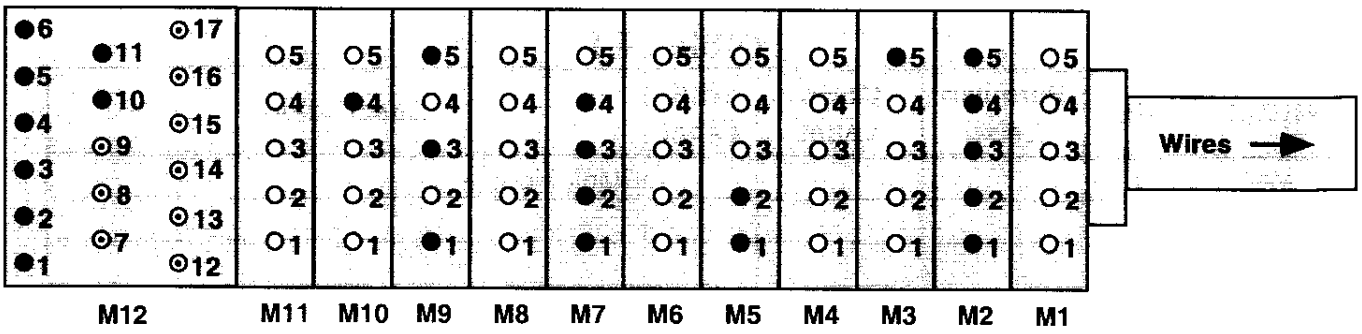

● Hole filled in grey: Wire soldered to pin.
⊙ Hole with dot in center: Pin exists but no wire soldered to it.
O Hole filled in white: No pin. Hole is drilled out.

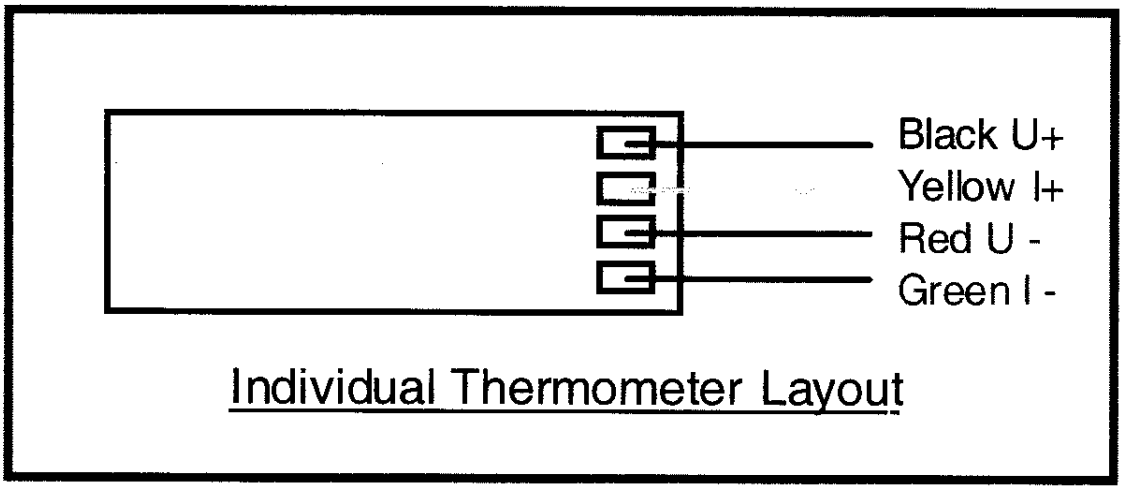

S. Hefs
Technician(s)

11/14/2005
Date

14.2 Install Hypertronics Connectors at **Q2b** end as per Q2 Cold Mass Welded Assembly (ME-390309) and Hypertronics Connector Assembly (MB-418083). Pin Numbers for connectors are shown in Table 14.2 below.

Table 14.2

Q2 connector (non-ip, or Q2b end) for Q2-Q3 connection **Completed on 11-20-03**

Module	Pin	Fermilab Label	CERN Label	KEK Label	Description
M1	1				Blank Module
M1	2				
M1	3				
M1	4				
M1	5				
M2	1	VTa1Q1	EE1111	a1	Q1 Lead Voltage Tap "a" , primary
M2	2	VTa2Q1	EE1121	a2	Q1 Lead Voltage Tap "a", redundant
M2	3	VTc1Q1	EE1211	c1	Q1 Center Voltage Tap "c", primary
M2	4	VTc2Q1	EE1221	c2	Q1 Center Voltage Tap "c", redundant
M2	5	VTb1Q1	EE1311	b1	Q1 Lead Voltage Tap "b", primary
M3	1	VTc1Q2a	EE1212		Q2a Center Voltage Tap "c", primary
M3	2	VTdQ2a	Empty		Q2a Quarter Coil Voltage Tap "d" (Q1inner-Q3 outer interface)
M3	3	VTa2Q2a	EE1122		Q2a lead Voltage Tap "a", redundant
M3	4	VTa1Q2a	EE1112		Q2a Lead Voltage Tap "a", primary
M3	5	VTb2Q1	EE1321	b2	Q1 Lead Voltage Tap "b", redundant
M4	1	VTc2Q2a	EE1222		Q2a Center Voltage Tap "c", redundant
M4	2	VTeQ2a	Empty		Q2a Quarter Voltage Tap "e", (Q2 inner -Q4 outer interface)
M4	3	VTb1Q2a	EE1312		Q2a Lead Voltage Tap "b", primary
M4	4	VTb2Q2a	EE1322		Q2a Lead Voltage Tap "b", redundant
M4	5	VTb1Q2b	EE1612		Q2b lead Voltage Tap "b", primary
M5	1	VTdQ2b	Empty		Q2b Quarter Coil Voltage Tap "d" (Q1inner-Q3 outer interface)
M5	2	VTc2Q2b	EE1522		Q2b Center Voltage Tap "c", redundant
M5	3	VTc1Q2b	EE1512		Q2b Center Voltage Tap "c", primary
M5	4	VTeQ2b	Empty		Q2b Quarter Voltage Tap "e", (Q2 inner -Q4 outer interface)
M5	5	VTb2Q2b	EE1622		Q2b Lead Voltage Tap "b" redundant

Table 14.2

Module	Pin	Fermilab Label	CERN Label	KEK Label	Description
M6	1	VTa1Q2b	EE1412		Q2b Lead Voltage Tap "a", primary
M6	2	VTa2Q2b	EE1422		Q2b Lead Voltage Tap "a", redundant
M6	3	Empty	Empty		No connection
M6	4	Empty	Empty		No connection
M6	5	Empty	Empty		No connection
M7	1				Blank Module
M7	2				
M7	3				
M7	4				
M7	5				
M8	1	VTH1	EE8121		Corrector voltage tap Q1-H1 (skew dipole) (on MCBX, MCBXH, A+ lead)
M8	2	VTV1	EE8111		Corrector voltage tap Q1-V1 (normal dipole) (on MCBX, MCBXV A+ lead)
M8	3	VTH2	EE8122		Corrector voltage tap Q2-H2 (skew dipole) (on MCBX, MCBXH, A+ lead)
M8	4	VTV2	EE8112		Corrector voltage tap Q2-V2 (normal dipole) (on MCBX, MCBXV, A+ lead)
M8	5	Empty	Empty		No connection
M9	1				Blank Module
M9	2				
M9	3				
M9	4				
M9	5				
M10	1	W1aQ1	EH8311+		Q1 Cryogenic Heater lead end - wire at top (CERN #1 I+)
M10	2	W2aQ1	EH8311-		Q1 Cryogenic Heater lead end - wire at bottom (CERN #1 I-)
M10	3	W1bQ1	EH8321+		Q1 Cryogenic Heater non-lead end - wire at top (CERN #2 I+)
M10	4	W2bQ1	EH8321-		Q1 Cryogenic Heater non-lead end - wire at bottom (CERN #2 I-)
M10	5	Empty	Empty		No connection

Table 14.2

Module	Pin	Fermilab Label	CERN Label	KEK Label	Description
M11	1	W1aQ2A	EH8312+		Q2A Cryogenic Heater lead end - wire toward cold mass end plate (CERN #1 I+)
M11	2	W2aQ2A	EH8312-		Q2A Cryogenic Heater lead end - wire toward cold mass mag center (CERN #1 I-)
M11	3	W1bQ2A	EH8322+		Q2A Cryogenic Heater non-lead end- wire toward cold mass end plate (CERN #2 I+)
M11	4	W2bQ2A	EH8322-		Q2A Cryogenic Heater non-lead end- wire toward cold mass mag center (CERN #2 I-)
M11	5	Empty	Empty		No connection
M12	1	W1aQ2B	EH8332+		Q2B Cryogenic Heater lead end - wire toward cold mass end plate (CERN #1 I+)
M12	2	W2aQ2B	EH8332-		Q2B Cryogenic Heater lead end - wire toward cold mass mag center (CERN #1 I-)
M12	3	W1bQ2B	EH8342+		Q2B Cryogenic Heater non-lead end- wire toward cold mass end plate (CERN #2 I+)
M12	4	W2bQ2B	EH8342-		Q2B Cryogenic Heater non-lead end- wire toward cold mass mag center (CERN #2 I-)
M12	5	Empty	Empty		No connection
M13	1				Blank Module
M13	2				
M13	3				
M13	4				
M13	5				
M14	1	H1aQ1	YT1111+	HA1	Q1 Protection (Strip) Heater, ("a" circuit) (CERN lead #1+)
M14	2	Empty	Empty		No connection
M14	3	H2aQ1	YT1111-	HA2	Q1Protection (Strip) Heater, ("a" circuit) (CERN lead #1-)
M14	4	Empty	Empty		No connection
M14	5	H1bQ1	YT1121+	HB1	Q1 Protection (Strip) Heater, ("b" circuit) (CERN lead #2+)

Table 14.2

Module	Pin	Fermilab Label	CERN Label	KEK Label	Description
M15	1	Empty	Empty		No connection
M15	2	H1aQ2a	YT1112+		Q2a Protection (Strip) Heater, 1-4 & 2-3 circuit (FNAL lead A+) (CERN lead #1+)
M15	3	Empty	Empty		No connection
M15	4	H2bQ1	YT1121-	HB2	Q1 Protection (Strip) Heater, ("b" circuit) (CERN lead #2-)
M15	5	Empty	Empty		No connection
M16	1	H2aQ2a	YT1112-		Q2a Protection (Strip) Heater, 1-4 & 2-3 circuit (FNAL lead A-) (CERN lead #1-)
M16	2	Empty	Empty		No connection
M16	3	H1bQ2a	YT1122+		Q2a Protection (Strip) Heater, 1-2 & 3-4 circuit (FNAL lead B+) (CERN lead#2+)
M16	4	Empty	Empty		No connection
M16	5	H2bQ2a	YT1122-		Q2a Protection (Strip) Heater, 1-2 & 3-4 circuit (FNAL lead B-) (CERN lead #2-)
M17	1	Empty	Empty		No connection
M17	2	H2aQ2b	YT1132-		Q2b Protection (Strip) Heater, 1-4 & 2-3 circuit (FNAL lead A-) (CERN lead #1-)
M17	3	Empty	Empty		No connection
M17	4	H1aQ2b	YT1132+		Q2b Protection (Strip) Heater, 1-4 & 2-3 circuit (FNAL lead A+) (CERN lead #1+)
M17	5	Empty	Empty		No connection
M18	1	H1bQ2b	YT1142+		Q2b Protection (Strip) Heater, 1-2 & 3-4 circuit (FNAL lead B+) (CERN lead#2+)
M18	2	Empty	Empty		No connection
M18	3	H2bQ2b	YT1142-		Q2b Protection (Strip) Heater, 1-2 & 3-4 circuit (FNAL lead B-) (CERN lead #2-)
M18	4	Empty	Empty		No connection
M18	5	Empty	Empty		No connection

Table 14.2

Module	Pin	Fermilab Label	CERN Label	KEK Label	Description
M19	1				Blank Module
M19	2				
M19	3				
M19	4				
M19	5				
Note: Pin numbers of Module M20 are not listed in numerical order					
M20	1	TaQ1_I+	TT8311 I+		Q1 RTD, primary Wire color: Yellow
M20	2	TaQ1_I-	TT8311 I-		Q1 RTD, primary Wire color: Green
M20	3	TaQ1_V+	TT8311 U+		Q1 RTD, primary Wire color: Black
M20	4	TaQ1_V-	TT8311 U-		Q1 RTD, primary Wire color: Red
M20	5	TbQ1_I+	TT8321 I+		Q1 RTD, redundant: Wire color: Yellow
M20	6	TbQ1_I-	TT8321 I-		Q1 RTD, redundant: Wire color: Green
M20	11	TbQ1_V+	TT8321 U+		Q1 RTD, redundant: Wire color: Black
M20	10	TbQ1_V-	TT8321 U-		Q1 RTD, redundant: Wire color: Red
M20	9	TaQ2a_I+	TT8312 I+		Q2a RTD, primary Wire color: Yellow
M20	8	TaQ2a_I-	TT8312 I-		Q2a RTD, primary Wire color: Green
M20	7	TaQ2a_V+	TT8312 U+		Q2a RTD, primary Wire color: Black
M20	12	TaQ2a_V-	TT8312 U-		Q2a RTD, primary Wire color: Red
M20	13	TbQ2a_I+	TT8322 I+		Q2a RTD, redundant: Wire color: Yellow
M20	14	TbQ2a_I-	TT8322 I-		Q2a RTD, redundant: Wire color: Green
M20	15	TbQ2a_V+	TT8322 U+		Q2a RTD, redundant: Wire color: Black
M20	16	TbQ2a_V-	TT8322 U-		Q2a RTD, redundant: Wire color: Red
M20	17	Empty	Empty		No connection

Table 14.2

Note: Pin numbers of Module M21 are not listed in numerical order					
Module	**Pin**	**Fermilab Label**	**CERN Label**	**KEK Label**	**Description**
M21	1	TaQ2b_I+	TT8332 I+		Q2b RTD, primary Wire color: Yellow
M21	2	TaQ2b_I-	TT8332 I-		Q2b RTD, primary Wire color: Green
M21	3	TaQ2b_V+	TT8332 U+		Q2b RTD, primary Wire color: Black
M21	4	TaQ2b_V-	TT8332 U-		Q2b RTD, primary Wire color: Red
M21	5	TbQ2b_I+	TT8342 I+		Q2b RTD, redundant: Wire color: Yellow
M21	6	TbQ2b_I-	TT8342 I-		Q2b RTD, redundant: Wire color: Green
M21	11	TbQ2b_V+	TT8342 U+		Q2b RTD, redundant: Wire color: Black
M21	10	TbQ2b_V-	TT8342 U-		Q2b RTD, redundant: Wire color: Red
M21	9	Empty	Empty		No connection
M21	8	Empty	Empty		No connection
M21	7	Empty	Empty		No connection
M21	12	Empty	Empty		No connection
M21	13	Empty	Empty		No connection
M21	14	Empty	Empty		No connection
M21	15	Empty	Empty		No connection
M21	16	Empty	Empty		No connection
M21	17	Empty	Empty		No connection

Hypertronics Connector pin locations for Q2 (non-ip, or Q2b end)
VIEW: Male (pin) solder cup side

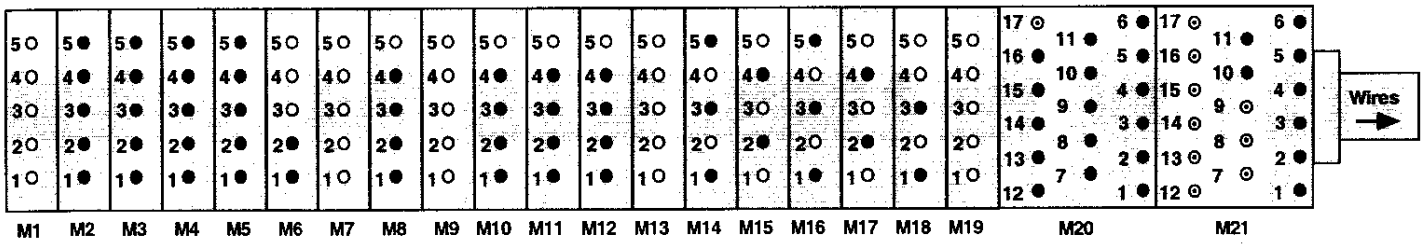

● **Hole filled in grey: Wire soldered to pin.**
⊙ **Hole with dot in center: Pin exists but no wire soldered to it.**
○ **Hole filled in white: No pin. Hole is drilled out.**

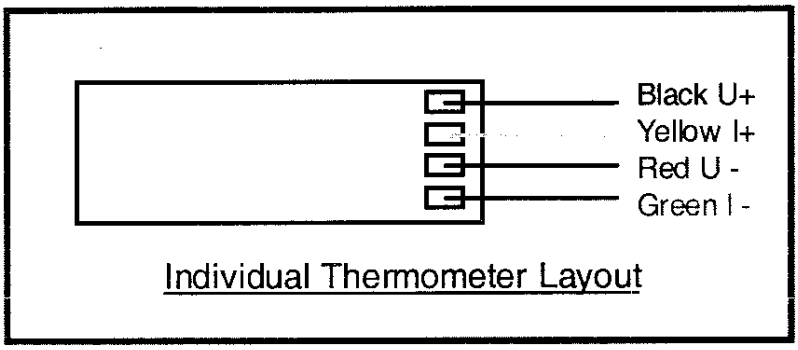

Note(s):

Ensure the Hypertronics cover has NOT been installed.

Technician(s) _____ Date 11/12/2005

14.3 Inspect Hypertronics Connector. Ensure that it is free of flux and that Kapton has been installed properly.

Responsible Authority/Physicist _____ Date 14-NOV-2005

14.4 After LHC Project Physicist / designee has signed the above step, complete the installation of the Hypertronics.

Technician(s) _____ Date 11/14/05

15.0 Final Electrical Inspection

15.1 Perform an electrical inspection on each of the Individual Quadrants and the Cold Masses. Refer to the Valhalla and Leader Free Standing Coil Measurement Procedure (ES-292306).

To measure the resistance of a bussed Q2:

1. Use Valhalla Scientific 4300B digital micro-ohmmeter.
2. Set Test Current to 1 amp.
3. Set Scale to 2V full scale.
4. Turn temperature compensation on.
5. Turn test current off.
6. Put jumper between Q2a Q3 inner power lead and 5 KA bus as shown in figure.
7. Connect I_{HI} to the 5KA bus (Q2a Q3 inner power lead) as shown in figure.
8. Connect I_{LO} to the Q2b Q3 inner power lead as shown in figure.
9. Turn test current on.
10. Connect V_{HI} and V_{LO} to voltage taps as shown below.
11. Read resistance and record in traveler.

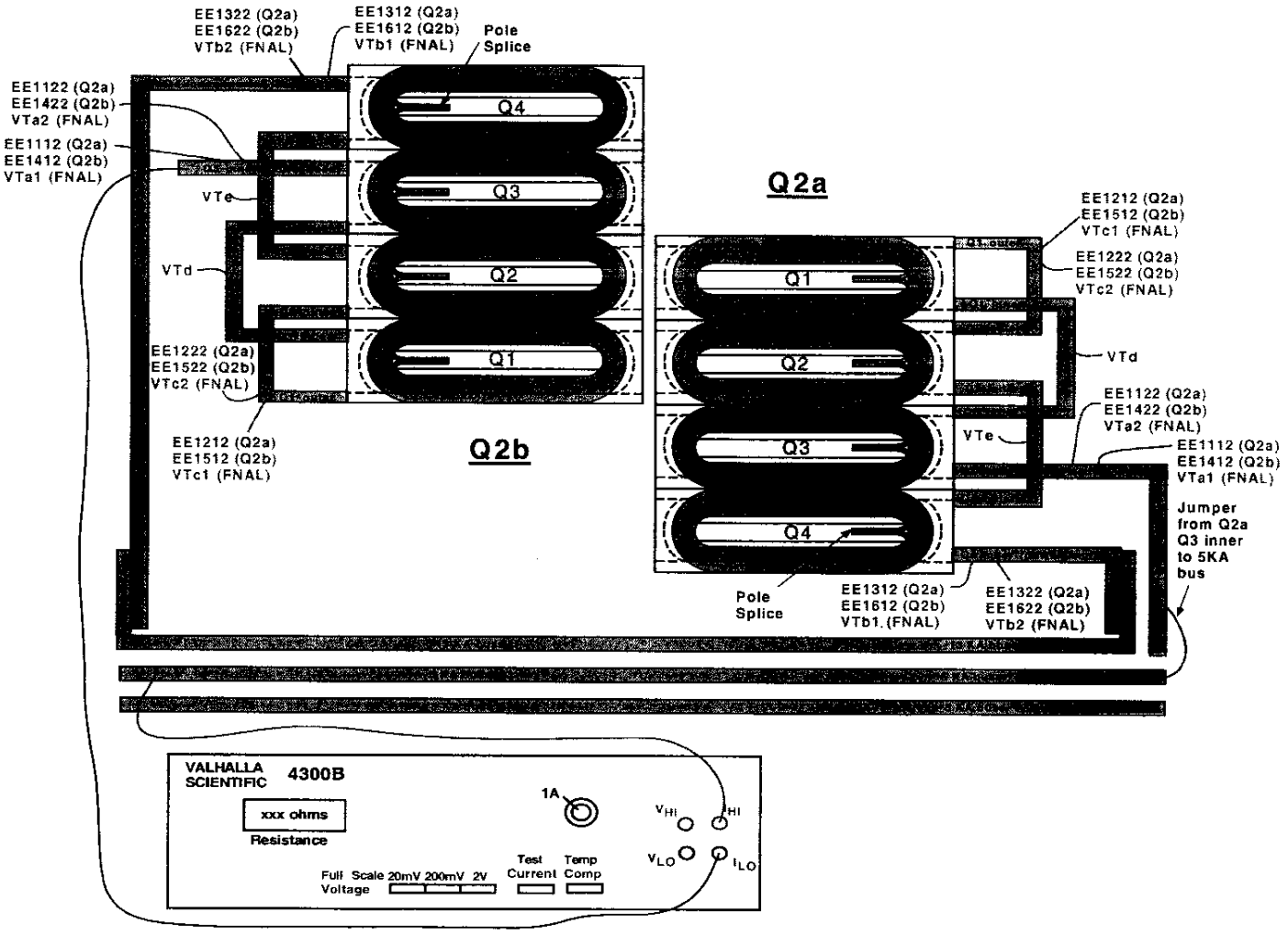

(Q2a) Resistance				Nominal ~ 560 to 585 mΩ
Voltage Tap Serial Numbers				Quadrant Total Resistance
Connect	Fermi	CERN	Quadrant	
V_{HI}	VTdQ2a	EMPTY	Quadrant 1	573.8 mΩ
V_{LO}	VTc1Q2a	EE1212		
V_{HI}	VTc1Q2a	EE1212	Quadrant 2	572.5 mΩ
V_{LO}	VTeQ2a	EMPTY		
V_{HI}	VTa1Q2a	EE1112	Quadrant 3	573.9 mΩ
V_{LO}	VTdQ2a	EMPTY		
V_{HI}	VTeQ2a	EMPTY	Quadrant 4	573.7 mΩ
V_{LO}	VTb1Q2a	EE1312		

****Set test current to 0.1 Amps for Total Resistance Measurement****

V_{HI}	VTa1Q2a	EE1112	Total Cold Mass	Nominal ~ 2.305 Ω
V_{LO}	VTb1Q2a	EE1312		2.295 Ω

Technician(s) _____ Date 11-15-05

Check resistance of Redundant Voltage Taps.

Q2a Redundant Voltage Taps				
Connect	Fermi	CERN	Resistance	Nominals
V_{HI}	VTa2Q2a	EE1122	1149 Ω	1120 - 1170 mΩ
V_{LO}	VTc2Q2a	EE1222		
V_{HI}	VTc2Q2a	EE1222	1147 Ω	1120 - 1170 mΩ
V_{LO}	VTb2Q2a	EE1322		

Technician(s) _____ Date 11-15-05

To measure Ls and Q of a Bussed Q2a:

1. Use Agilent 4263B LCR Meter.
2. Turn power on by pushing Line button. Wait 30 seconds until display screen is lit.
3. Recall program #1. To do this, push recall (Rcl), then push the #1, then push Enter.
4. Push Auto/Hold button to release hold.
5. Verify that the frequency displayed in the upper right corner of the display screen is 1000 Hz and the level recorded in the lower right corner of the display screen is 1V or 1000 mV.
6. Connect jumper between Q2a/Quadrant 3 inner power lead and 5KA bus as shown in figure.
7. Connect H_{cur} to Q2b/Quadrant 3 inner power lead as shown in figure.
8. Connect L_{cur} to 5KA bus as shown in figure.
9. Connect H_{pot} and L_{pot} buttons to voltage taps as shown below.

To measure Q2a:

- To measure Q1, connect H_{pot} to VTc1 (EE1212 for Q2a), and L_{pot} to VTd.
- To measure Q2, connect H_{pot} to VTe, and L_{pot} to VTc1 (EE1212 for Q2a).
- To measure Q3, connect H_{pot} to VTd and L_{pot} to VTa1 (EE1112 for Q2a).
- To measure Q4, connect H_{pot} to VTb1 (EE1312 for Q2a), and L_{pot} to VTe.
- To measure total, connect H_{pot} to VTb1 (EE1312 for Q2a), and L_{pot} to VTa1 (EE1112 for Q2a).

10. Read Ls and Q from display and record in traveler.

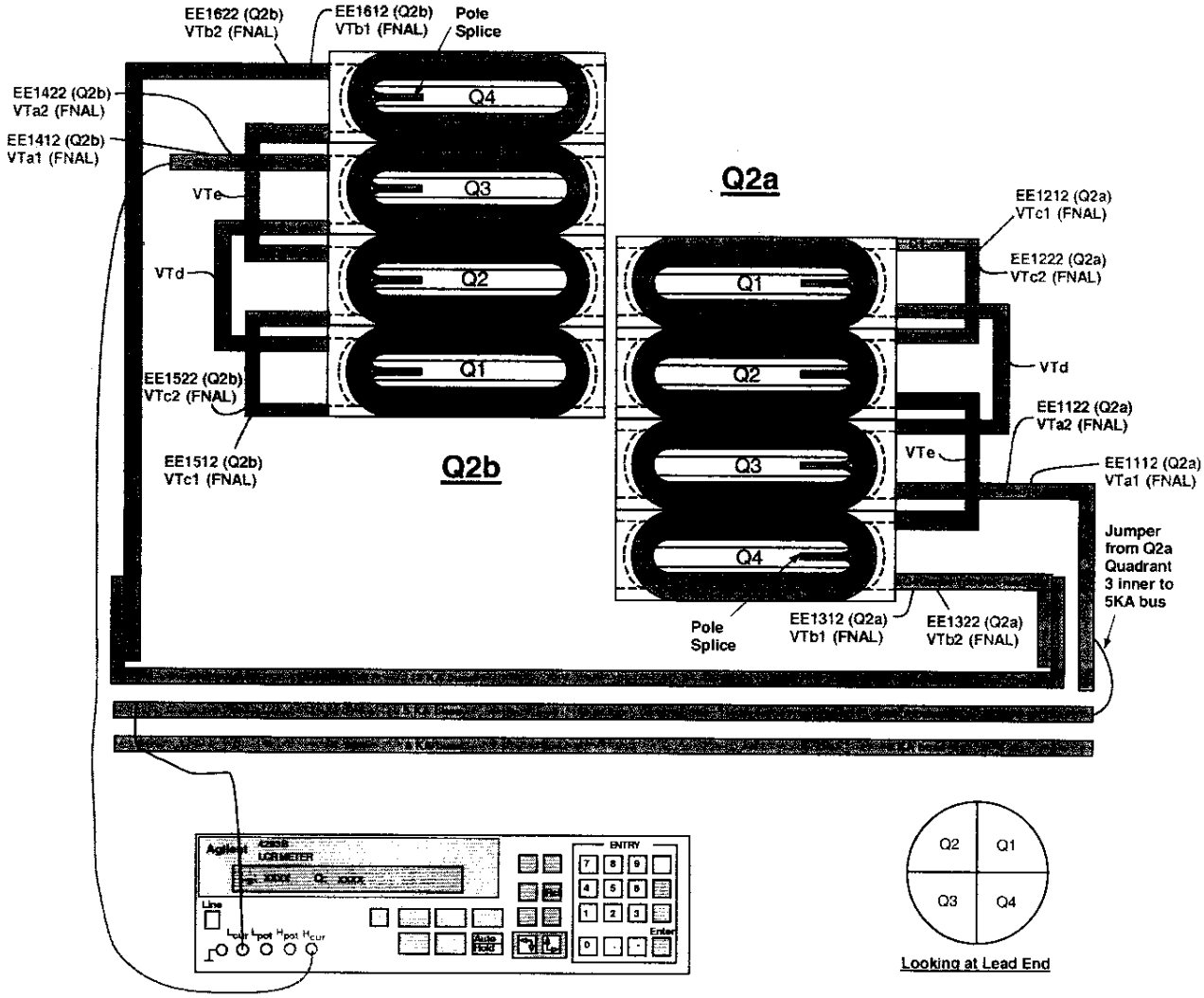

(Q2a) Inductance				Nominal ~ 3.34 to 3.48 mH
Voltage Tap Serial Numbers				Quadrant Total Inductance
Connect	Fermi	CERN	Quadrant	
L_{POT}	VTdQ2a	EMPTY	Quadrant 1	3.40 mH
H_{POT}	VTc1Q2a	EE1212		
L_{POT}	VTc1Q2a	EE1212	Quadrant 2	3.48 mH
H_{POT}	VTeQ2a	EMPTY		
L_{POT}	VTdQ2a	EMPTY	Quadrant 3	3.46 mH
H_{POT}	VTa1Q2a	EE1112		
L_{POT}	VTeQ2a	EMPTY	Quadrant 4	3.46 mH
H_{POT}	VTb1Q2a	EE1312		

L_{POT}	VTa1Q2a	EE1112	Total Cold Mass	Nominal ~ 13.3376 mH
H_{POT}	VTb1Q2a	EE1312		13.898 mH

(Q2a) Q-Factor				Nominal ~ 3.7 to 4.0
Voltage Tap Serial Numbers				Quadrant Total Q
Connect	Fermi	CERN	Quadrant	
L_{POT}	VTdQ2a	EMPTY	Quadrant 1	3.7
H_{POT}	VTc1Q2a	EE1212		
L_{POT}	VTc1Q2a	EE1212	Quadrant 2	3.8
H_{POT}	VTeQ2a	EMPTY		
L_{POT}	VTa1Q2a	EE1112	Quadrant 3	4.0
H_{POT}	VTdQ2a	EMPTY		
L_{POT}	VTeQ2a	EMPTY	Quadrant 4	3.8
H_{POT}	VTb1Q2a	EE1312		

L_{POT}	VTa1Q2a	EE1112	Total Cold Mass	Nominal ~ 3.7 to 4.0
H_{POT}	VTb1Q2a	EE1312		3.8

Technician(s) [signature]

Date 11-15-05

To measure the resistance of a bussed Q2:

1. Use Valhalla Scientific 4300B digital micro-ohmmeter.
2. Set Test Current to 1 amp.
3. Set Scale to 2V full scale.
4. Turn temperature compensation on.
5. Turn test current off.
6. Put jumper between Q2a Q3 inner power lead and 5 KA bus as shown in figure.
7. Connect I_{HI} to the 5KA bus (Q2a Q3 inner power lead) as shown in figure.
8. Connect I_{LO} to the Q2b Q3 inner power lead as shown in figure.
9. Turn test current on.
10. Connect V_{HI} and V_{LO} to voltage taps as shown below.
11. Read resistance and record in traveler.

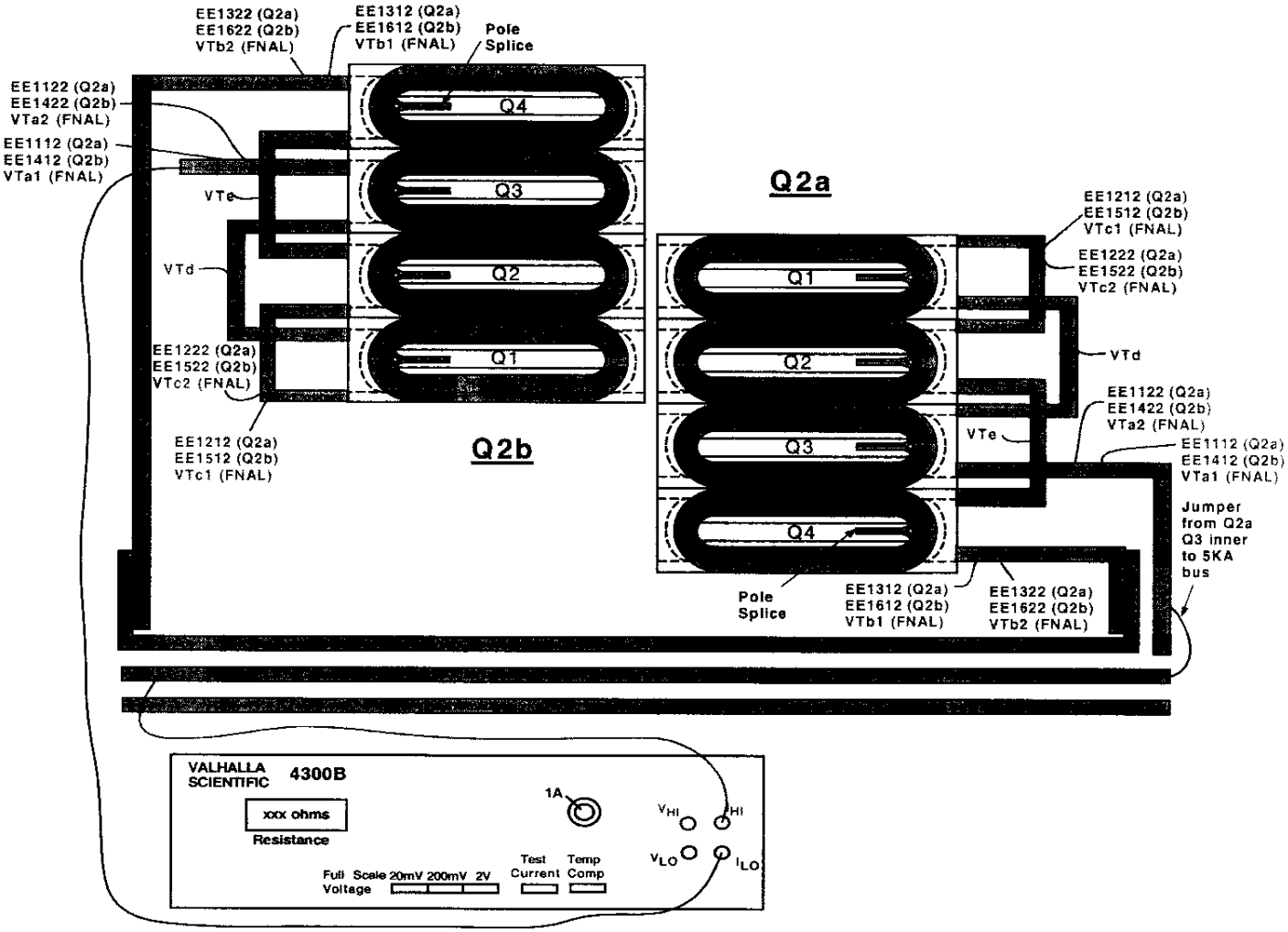

(Q2b) Resistance				Nominal ~ 560 to 585 mΩ
Voltage Tap Serial Numbers				Quadrant Total Resistance
Connect	Fermi	CERN	Quadrant	
V_{HI}	VTc1Q2b	EE1512	Quadrant 1	571.9 mΩ
V_{LO}	VTdQ2b	EMPTY		
V_{HI}	VTeQ2b	EMPTY	Quadrant 2	571.7 mΩ
V_{LO}	VTc1Q2b	EE1512		
V_{HI}	VTdQ2b	EMPTY	Quadrant 3	571.8 mΩ
V_{LO}	VTa1Q2b	EE1412		
V_{HI}	VTb1Q2b	EE1612	Quadrant 4	572.2 mΩ
V_{LO}	VTeQ2b	EMPTY		

****Set test current to 0.1 Amps for Total Resistance Measurement****

V_{HI}	VTb1Q2b	EE1612	Total Cold Mass	Nominal ~ 2.305 Ω
V_{LO}	VTa1Q2b	EE1412		2.289 Ω

D Murcyk
Technician(s)

11-15-05
Date

Check the resistance of the Redundant Voltage Taps.

Q2b Redundant Voltage Taps				
Connect	Fermi	CERN	Resistance	Nominals
V_{HI}	VTc2Q2b	EE1522	1144 Ω	1120 - 1170 mΩ
V_{LO}	VTa2Q2b	EE1422		
V_{HI}	VTb2Q2b	EE1622	1144 Ω	1120 - 1170 mΩ
V_{LO}	VTc2Q2b	EE1522		

D Murcyk
Technician(s)

11-15-05
Date

To measure Ls and Q of a Bussed Q2b:

1. Use Agilent 4263B LCR Meter.
2. Turn power on by pushing line button. Wait 30 seconds until display screen is lit.
3. Recall program #1. To do this, push recall (Rcl), then push #1, then push Enter.
4. Push Auto/Hold button to release hold.
5. Verify that the frequency displayed in the upper right corner of the display screen is 1000 Hz and the level recorded in the lower right corner of the display screen is 1V or 1000 mV.
6. Connect jumper between Q2a/Quadrant 3 inner power lead and 5KA bus as shown in figure.
7. Connect H_{cur} to 5KA bus as shown in figure.
8. Connect L_{cur} to Q2b/Quadrant 3 inner power lead as shown in figure.
9. Connect H_{pot} and L_{pot} buttons to voltage taps as shown below.

To measure Q2b:

- To measure Q1, connect H_{pot} to VTc1 (EE1512 for Q2b), and L_{pot} to VTd.
- To measure Q2, connect H_{pot} to VTe and L_{pot} to VTc1 (EE1512 for Q2b).
- To measure Q3, connect H_{pot} to VTd and L_{pot} to VTa1 (EE1412 for Q2b).
- To measure Q4, connect H_{pot} to VTb1 (EE1612 for Q2b) and L_{pot} to VTe.
- To measure total, connect H_{pot} to VTb1 (EE1612 for Q2b) and L_{pot} to VTa1 (EE1412 for Q2b).

10. Read Ls and Q from display and record in traveler.

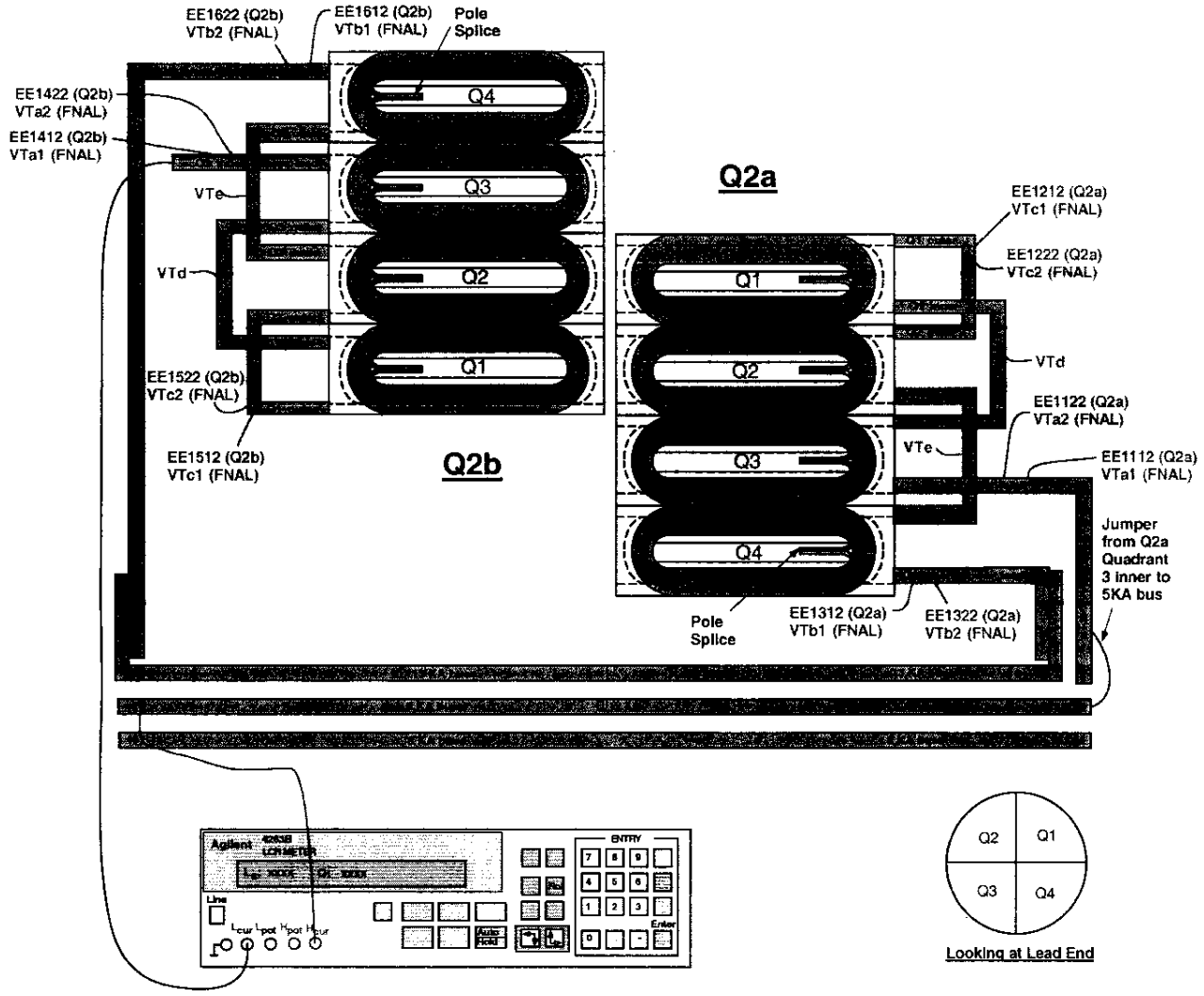

(Q2b) Inductance				Nominal ~ 3.34 to 3.48 mH
Voltage Tap Serial Numbers				Quadrant Total Inductance
Connect	Fermi	CERN	Quadrant	
H_{POT}	VTc1Q2b	EE1512	Quadrant 1	3.42 mH
L_{POT}	VTdQ2b	EMPTY		
H_{POT}	VTeQ2b	EMPTY	Quadrant 2	3.43 mH
L_{POT}	VTc1Q2b	EE1512		
H_{POT}	VTdQ2b	EMPTY	Quadrant 3	3.35 mH
L_{POT}	VTa1Q2b	EE1412		
H_{POT}	VTb1Q2b	EE1612	Quadrant 4	3.39 mH
L_{POT}	VTeQ2b	EMPTY		

H_{POT}	VTb1Q2b	EE1612	Total Cold Mass	Nominal ~ 13.3376 mH
L_{POT}	VTa1Q2b	EE1412		13.606 mH

(Q2b) Q-Factor				Nominal ~ 3.7 to 4.0
Voltage Tap Serial Numbers				Quadrant Total Q
Connect	Fermi	CERN	Quadrant	
H_{POT}	VTc1Q2b	EE1512	Quadrant 1	3.8
L_{POT}	VTdQ2b	EMPTY		
H_{POT}	VTeQ2b	EMPTY	Quadrant 2	3.9
L_{POT}	VTc1Q2b	EE1512		
H_{POT}	VTdQ2b	EMPTY	Quadrant 3	3.9
L_{POT}	VTa1Q2b	EE1412		
H_{POT}	VTb1Q2b	EE1612	Quadrant 4	3.8
L_{POT}	VTeQ2b	EMPTY		

H_{POT}	VTb1Q2b	EE1612	Total Cold Mass	Nominal ~ 3.7 to 4.0
L_{POT}	VTa1Q2b	EE1412		3.9

Technician(s) _____ Date 11-15-05

To measure the resistance of a Thermometer (RTD):

1. Use Hewlett Packard HP3457A digital multimeter.
2. Record temperature of building within +/- 5 degrees.
3. Press line button to turn line on.
4. Connect wires as shown in Figure below.
   U+ (Black) to Sense HI
   I+ (Yellow) to Input HI
   U- (Red) to Sense LO
   I- (Green) to Input LO
5. Push blue button (function key) once.
6. Push OHMF button.
7. Verify arrow in readout is above the 4WΩ (meaning a 4 wire resistance measurement).
8. Read resistance in ohms and record in traveler.

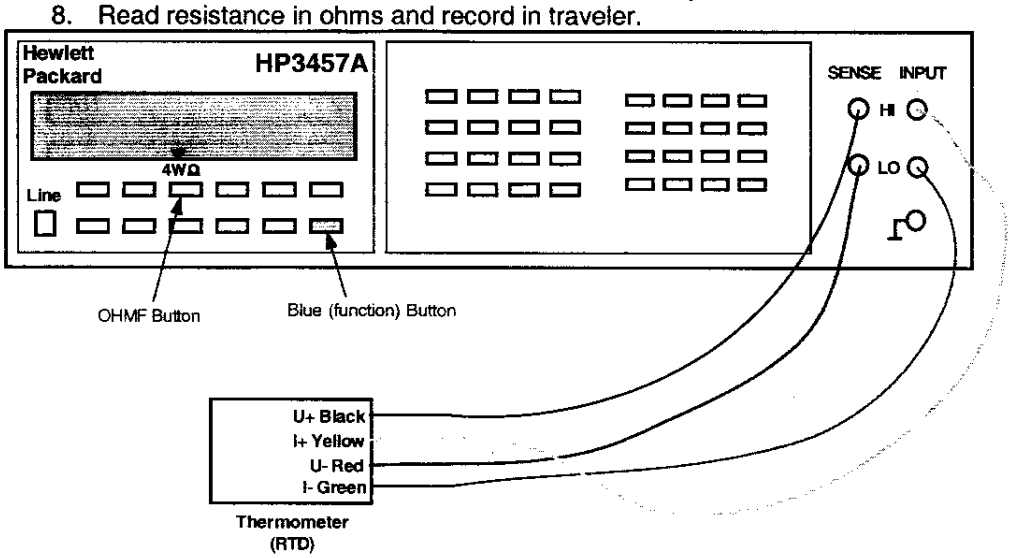

To measure the resistance of a Cryogenic (Warm-up) Heater

1. Use Hewlett Packard HP3457A digital multimeter.
2. Record temperature of building within +/- 5 degrees.
3. Press line button to turn line on.
4. Connect wires as shown in Figure below.
5. Push blue button (function key) once.
6. Push OHMF button.
7. Verify arrow in readout is above the 4WΩ (meaning a 4 wire resistance measurement).
   Note: Although this is technically a 4 wire measurement, it is effectively a 2 wire measurement, since there are only 2 wires connected to each heater.
8. Read resistance in ohms and record in traveler.

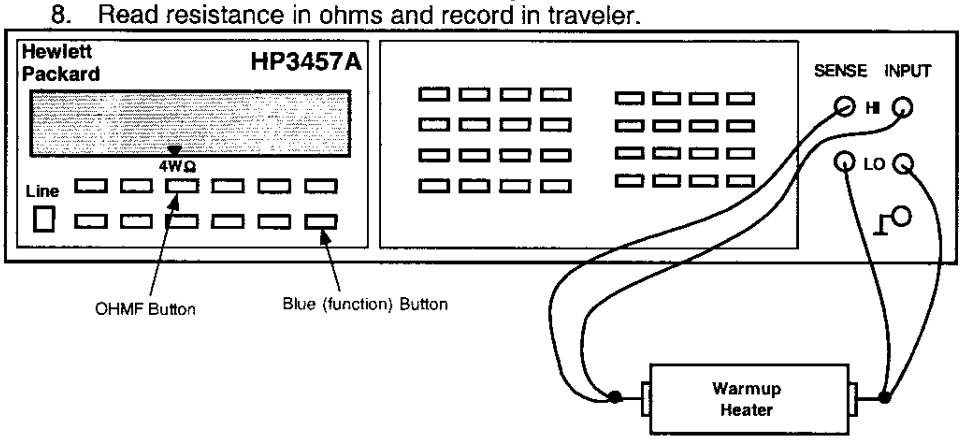

15.2 Ground as indicated according to table below. Hipot Hypertronics to 5kV. Maximum leakage is 3μA. Refer to hipot procedure TD-03-014. (Next page).

STOP

Have Crew Chief verify setup and sign below before continuing.

Crew Chief _____ Date 11-15-05

Hipot Heaters to Coil and Ground.

High Potential	Grounded	Floating	Leakage
All Strip Heaters	Coils, Yoke, Q1 Instrumentation Bus, 8kA and 5kA Lead Busses and Corrector Coil Busses, RTD's and Warm-up Heaters	Nothing	1173 NA

Hipot Coil to Heaters and Ground.

High Potential	Grounded	Floating	Leakage
All Coils	Strip Heaters, Yoke, Q1 Instrumentation Bus, 8kA and 5kA Lead Busses and Corrector Coil Busses, RTD's and Warm-up Heaters	Nothing	.83 ua

Technician(s) _____ Date 11-15-05

STOP

Responsible Authority/Physicist _____ Date 15-NOV-2005

15.3 Ensure electrical measurements are acceptable and confirm Hypertronics Connector has been installed properly.

STOP

Responsible Authority/Physicist _____ Date 15-NOV-2005

LHC PRODUCTION MAGNETS
HIPOT TEST PROCEDURE WITH HYPERTRONICS CONNECTORS INSTALLED
Technical Division Note #TD-03-014

Prepared by: Ruben Carcagno
Approved by: Mike Lamm
Date: 12/19/2002
Reviewed and approved by Rodger Bossert : 1/30/04

Q2–Q3 Connector
VIEW: Male (Pin) Solder Cup Side

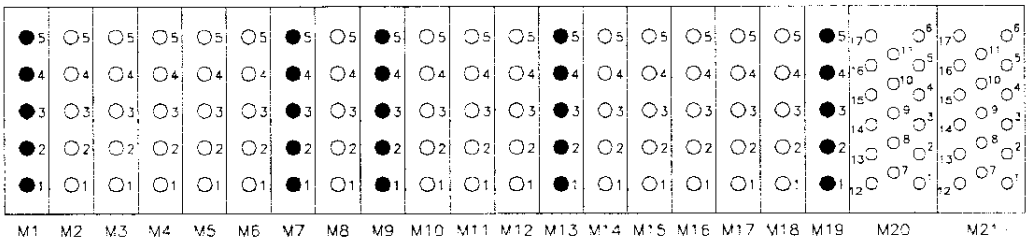

Q2–Q1 Connector
VIEW: Female (Receptacle) Solder Cup Side

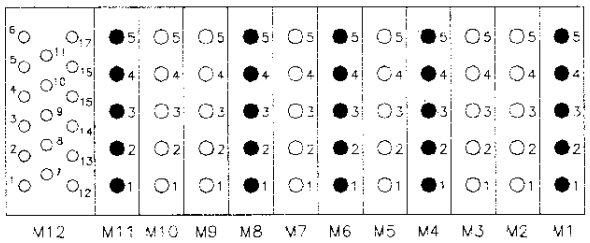

1. Connect the Hipot test fixture to the Q2-Q3 connector and to the Q2-Q1 connector. This fixture has all pins in a group connected together. Groups are separated by blank modules.
2. Make sure the connectors are completely isolated from ground. It is best to have the connectors attached to the magnet in their final position using the isolated bracket provided for this purpose. If this is not possible, make sure that connector rails are not touching ground.
3. Make sure the magnet bus is isolated from ground. Use Kapton to wrap any exposed bus ends.
4. Short all corrector bus together. Wrap with Kapton.
5. Connect together two 5kA and 8kA Bus leads. Connect to ground. Wrap together in Kapton.
6. **COIL HIPOT**: From the solder cup side of the Hipot test fixtures, connect all groups together except the group corresponding to coil voltage taps (group M2 to M6 in the Q2-Q3 connector and group M2 to M3 in Q2-Q1 connector). Connect the groups that are connected together to ground, and connect the coil voltage taps group in the Q2-Q3 connector to High Voltage. Ramp to 5,000 Volts and record results.
7. **STRIP HEATERS HIPOT**: From the solder cup side of the Hipot test fixtures, connect all groups together except the group corresponding to strip heaters (group M14 to M18 in Q2-Q3 connector and group M9 to M10 in Q2-Q1 connector). Connect the groups that are connected together to ground, and connect the Strip Heater group in the Q2-Q3 connector to High Voltage. Ramp to 5,000Volts and record results.

16.0 Production Complete

16.1 Process Engineering verify that the LHC Cold Mass Module Assembly Traveler (5520-TR-333643) is accurate and complete. This shall include a review of all steps to ensure that all operations have been completed and signed off. Ensure that all Discrepancy Reports, Nonconformance Reports, Repair/Rework Forms, Deviation Index and dispositions have been reviewed by the Responsible Authority for conformance before being approved.

Comments:

_____

_____

_____

_____

_____

_____

Process Engineering/Designee _____ Date 6/26/06

TD - Engineering Fabrication Component Kit List

ORIGINAL

Process Engineering

Component Serial No. LMQXB10

Kit submitted by: JOHN SZOSTAK Ext. 2003

Fermi ID No. 02943C

Date submitted: 20-Sep-05

Need date: 27-Sep-05

Deliver to: ICB

Use with Traveler No. 333643

Job No. 248

M&S task number: 300 1.1.1.3.4

Drawing Title: Q2 COLD MASS WELDED ASSEMBLY

Drawing No. ME-390309 Rev. C

Drawing Title: Q2 LE HYPERTRONICS CONNECTOR ASSEMBLY

Drawing No. MB-418083 Rev. B

Drawing Title: *Q2 INSTRUMENTATION WIRE FEED THRU ASSEMBLY*

Drawing No. *ME-369896* *Rev. B*

Drawing Title: *Q2 NON-LE HYPERTRONICS CONNECTOR ASSEMBLY*

Drawing No. *MB-418133* *Rev.*

RECEIVED SEP 23 2005 MATERIAL CONTROL / IB4

Material Control

Parts available

Verified by: M. Schmidt MJ

Fermi ID No. 04223N

Date submitted to stockroom: 9/23/2005

Parts issued

Issued by: [signature]

Fermi ID No. 11939

Date issued: 9/27/05

Parts received by E&F: [signature]

Fermi ID No. 02943C

Date received by E&F: 9/27/05

	Description	Dwg Size	Number	Rev	Unit	Quantity Required	Location	Quantity Issued	E&F Verified	Routing Form Number	Spares Number / Comment
1	INSULATING VARNISH & ADHESIVE	MA	369417	-	-	A / R					
2	Q2 MQXB PRODUCTION COLDMASS	ME	369655	C	-	ICB HAS					
3	INSULATED BEAM TUBE	MD	369802	-	-	ICB HAS					
4	Q2 MODULE ASSEMBLY/INSULATED BUS ASSEMBLY	ME	369826	D	-	ICB HAS					
5	WARM UP HEATER BASE PLATE	MB	369829	A	EA	4	IB4 Bin	ICB Has	[signature]	ICB HAS	28 pcs.
6	WARM UP HEATER	MA	369834	A	EA	4	IB4 Bin	4	[signature]	82882	51 pcs.

PK0287

Serial No. LMQXB10

ORIGINAL

TD - Engineering Fabrication Component Kit List

ORIGINAL

	Description	Dwg Size	Number	Rev	Unit	Quantity Required	Location	Quantity Issued	E&F Verified	Routing Form Number	Spares Number / Comment
7	RTD TEMPERATURE SENSOR	MA	369835	A	EA	4	R2,2,5	4	JA	79920	2 pcs remaining 4 pcs.
8	BUS HOUSING EXTENSION	MD	369867	-	EA	1	ICB HAS				
9	Q2 BUS HOUSING LOCK	MB	369870	B	EA	1	ICB HAS				
10	Q2A BUS HOUSING EXTENSION	MD	369872	B	EA	1	ICB HAS				
11	Q2A BUS HOUSING EXTENSION BASE	MC	369873	A	EA	1	ICB HAS				
12	Q2 BUS HOUSING EXTENSION COVER	MB	369874	A	EA	2	ICB HAS				
13	BUS HOUSING END SUPPORT	MC	369892	A	EA	2	ICB HAS				
14	RTD MOUNTING BLOCK	MA	369893	B	EA	4	IB4 Bin	4	JA	80543	4 remaining 4 pcs.
15	Q2 LOCK-INSTRUMENTATION BUS CHANNNEL	MB	369937	-	EA	1	ICB HAS				
16	SHCS 4-40 x 1/4" S.S.	MA	369938	-	EA	8	IB4 Bin	8	JA	79032	72 pcs.
17	LEAD SPLICE CABLE CLAMP ASSEMBLY	MB	369981	-	EA	2	ICB HAS				
18	Q2 TRANSITION AREA SLEEVE	MC	390112	B	EA	1	P/N	1	JA	83246	2 pcs.
19	IP END DOME WELDMENT	MD	390197	B	EA	1	ICB HAS				
20	MCBX CORRECTOR MOUNTING SPACER	MC	390203	-	EA	4	ICB HAS				
21	MCBX CORRECTOR MTG. FLAT WASHER	MB	390228	-	EA	4	IB4 Bin	4	JA	83114	36 pcs.
22	TRANSPORTATION RESTRAINT ADJUSTING SCREW	MB	390230	A	EA	4	IB4 Bin	–			APR
23	1/2 - 20 x 3.5" SILVER PLATED SCREW	MA	390248	-	EA	4	IB4 Bin	4	JA	74623	10 pcs.
24	NON IP END DOME WELDMENT	MD	390253	A	EA	1	ICB HAS				

PK0287

Serial No. LMQXB10

ORIGINAL

ORIGINAL

TD - Engineering Fabr' tion Component Kit List

	Description	Dwg Size	Number	Rev	Unit	Quantity Required	Location	Quantity Issued	E&F Verified	Routing Form Number	Spares Number / Comment
25	MCBX TRANSPORTATION RESTRAINT NUT	MC	390294	-	EA	4	IB4 Bin	4	RA	76666	8 pcs.
26	BEAM TUBE FLANGE	MC	390300	B	EA	2	R10,1,2	2	RA	77028	20 pcs.
27	MCBX CORRECTION COIL ASSEMBLY	MD	390312	-	-	ICB HAS					
28	CORRECTOR SHIM, 0.002"	MA	390482	-	EA	4	R2,2,4	4	RA	79123	47 pcs.
29	CORRECTOR SHIM, 0.005"	MA	390483	-	EA	4	R2,2,4	4	RA	79124	74 pcs.
30	CORRECTOR SHIM, 0.010"	MA	390484	-	EA	4	R2,2,4	4	RA	79125	47 pcs.
31	CORRECTOR SHIM, 0.015"	MA	390485	-	EA	4	R2,2,4	4	RA	79126	51 pcs.
32	MCBX CORRECTOR MAGNET FACE PLATE	MD	390671	A	EA	1	R1,2,4	1	RA	80652	1 pc
33	SHCS #10-24 UNC x 1.00 LG STN STL	MA	393011	-	EA	4	IB4 Bin	4	RA	81108	77 pcs.
34	1/4 - 28 x 1" HEX SHCS, S.S.	MA	393029	-	EA	16	IB4 Bin	16	RA	77851	56 pcs.
35	#10 - 32 x 0.188" CUP POINT SET SCREW, S.S.	MA	393030	-	EA	8	IB4 Bin	8	RA	82379	114 pcs.
36	SHCS 1/4-20 x 1.25"	MA	393178	-	EA	8	IB4 Bin	8	RA	79632	44 pcs.
37	SHCS 1/4-20 x 1/2" S.S.	MA	393179	-	EA	14	IB4 Bin	14	RA	79629	67 pcs.
38	SHCS M4 x 10mm SS	MA	393180	-	EA	8	IB4 Bin	8	RA	79631	509 pcs.
39	PLAIN FLAT WASHER M4#6	MA	393181	-	EA	8	IB4 Bin	8	RA	82959	16 pcs.
40	SHCS 1/4-20 UNC x 1.00 LG STN STL	MA	393199	-	EA	4	IB4 Bin	4	RA	81109	80 pcs.
41	SHCS #6-32 UNC x .625 LG STN STL	MA	393264	-	EA	10	IB4 Bin	10	RA	82600	110 pcs.
42	6-32 x .875" LG STN STL	MA	393265	-	EA	4	IB4 Bin	4	RA	80968	267 pcs.

ORIGINAL

TD - Engineering Fabr tion Component Kit List

	Description	Dwg Size	Number	Rev	Unit	Quantity Required	Location	Quantity Issued	E&F Verified	Routing Form Number	Spares Number / Comment
43	SHCS #6-32 UNC x 1.25 LG STN STL	MA	393266	-	EA	4	IB4 Bin	4	QA	81107	68 pcs.
44	Q2A LEAD SPLICE END TRIANGLE	MB	430013	-	EA	1	R1,1,2	–			APR
HYPERTRONICS CONNECTOR ASSEMBLY (NON-IP END)		MB	418083	B	EA	(1)	ICB HAS				
45	CONNECTOR COVER & ACCESS COVER (23 UNITS)	MC	418067-A	*	EA	1	ICB HAS				
46	GROMMET	MA	418113	*	EA	1	ICB HAS				
47	CLAMPING BAR	MA	418112	*	EA	1	ICB HAS				
48	TIE-DOWN LINK	MA	418109	*	EA	4	ICB HAS				
49	SUPPORT ARM WELDMENT (23-UNIT)	MC	418080-A	*	PAIR	1	ICB HAS				
50	SCREW - #6-32 x 3/8 LG.	MA	418116	*	EA	4	ICB HAS				
51	SCREW - #4-40 x 1/2 LG.	MA	418117	*	EA	4	ICB HAS				
52	THREADED STUD ASSEMBLY	MA	418114	*	EA	4	ICB HAS				
53	23 UNIT MALE (PIN) RACK (Q2 - Q3 CONNECTOR)	MA	418107	*	EA	1	ICB HAS				
54	ANTI-ARC KAPTON	MA	418143	*	EA	17	ICB HAS				
Q2 INSTRUMENTATION WIRE FEED THRU ASSEMBLY		ME	369896	B	EA	(1)	ICB HAS				
55	Q2 WIRE FEED-THRU CHANNEL	MC	369899	*	EA	1	ICB HAS				
56	PRODUCTION AID KEVLAR STRING	MA	369912	*		A / R	ICB HAS				
57	Q2 MODULE ASSY INSTR. CHANNEL COVER STRIP	MB	369941	*	EA	11	R1,2,3	11	QA	78798	39 pcs.
HYPERTRONICS CONNECTOR ASSEMBLY (IP END)		MB	418133	*	EA	(1)	ICB HAS				

Serial No. LMQXB10

PK0287

ORIGINAL

TD - Engineering Fa cation Component Kit List

	Description	Dwg Size	Number	Rev	Unit	Quantity Required	Location	Quantity Issued	E&F Verified	Routing Form Number	Spares Number / Comment
58	*CONNECTOR COVER & ACCESS COVER (13 UNITS)*	*MC*	*418067-A*	*	*PAIR*	*1*	ICB HAS				
59	*GROMMET*	*MA*	*418113*	*	*EA*	*1*	ICB HAS				
60	*CLAMPING BAR*	*MA*	*418112*	*	*EA*	*1*	ICB HAS				
61	*SCREW - #6-32 x 3/8 LG.*	*MA*	*418116*	*	*EA*	*4*	ICB HAS				
62	*THREADED STUD ASSEMBLY*	*MC*	*418114*	*	*EA*	*4*	ICB HAS				
63	*13 UNIT FEMALE (PIN) RACK*	*MA*	*418108*	*A*	*EA*	*1*	ICB HAS				

ORIGINAL

CERN
CH-1211 Geneva 23
Switzerland

the **Large Hadron Collider** project

LHC ICP Document No.
LHC-MCBX-FR-0001 rev. **1.0**

EDMS Document No.

Rec'd 6-9-05

Certificate of Conformity

Part name:	MCBX Inner Triplet Dipole Corrector		
LHC Identification No.:	HCMCBX_001-SI000034	Serial No.:	HCMCBX_001-SI000034
Shipped To:	CERN	***Shipment No:***	***34***
		Shipment	***14/01/05***
Manufacturer:	SIGMAPHI	Contract No.:	F375/LHC/LHC
Related tech. Specification:	LHC-MCBX-CI-0001 and addenda		
Related drawings:	LHCMCBX_0012 (1525-CN-1001)		
Responsible person at CERN:	Mikko Karppinen	***Tel.***	+41 22 767 4305
		E-mail.	Mikko.Karppinen@cern.ch
Responsible person at SIGMAPHI:	Damien Neuvéglise	***Tel.***	+33 2 97 01 08 80
		E-mail.	dneuveglise@sigmaphi.fr

SIGMAPHI certifies that the delivered material conforms to the technical specification mentioned above:

Date: 14/01/05	***Name: D.Neuvéglise***	***Signature: D.Neuvéglise***

Acceptance test results

		MCBXV (Inner)	***MCBXH (Outer)***	***Remarks:***
RT dc resistance (Ω):	***SIGMAPHI:***	***17***	***21***	
	CERN:	***17.24***	***21.27***	
	CMA[1]:	17.03	20.97	
Inductance @1 kHz/100 Hz (mH)	***SIGMAPHI:***	***Series 63.16/84.44 Parallels 66.22/111.69***	***Series 58.56/97.95 Parallels 68.17/159.9***	
	CERN	***63.38 / 84.50***	***58.90 / 98.13***	
	CMA:	63.46 / 84.48	58.97 / 98.14	
R.T. leakage current to ground @ 1.5 kV (μA):	***SIGMAPHI:***	***15E-9A***	***30E-9A***	
	CERN:	***0.022***	***0.051***	
	CMA:	19nA @ 500V	53nA @ 500V	

	Cold Mass Assembler	
Visual inspection		**Accepted:** ☐
Name / Signature		**Rejected:** ☐
Date		

Comments (SigmaPhi):	***Livré sans la cover plate connexion side.***

Comments (CERN):	***Scribe line made relative to the magnetic axis measurement and shifted by 8.1 mrad clock-wise (1.4 mm) relative to the dowel pins on the connexion side.***
	During the individual powering the MCBXV and MCBXH reached 700 4.3K.
	During the combined powering of MCBXH and MCBXV field was rotated 0-360 deg at the nominal current @ 4.3 K.

Comments (CMA):	

FORM #1 FIXED VOLTAGE TAPS _1A_FORM

Test of Q2A&B FVTs
Clamp BUS #1 & BUS #2 together on return end
Apply 1 A current between BUS #1 & BUS #3
Connect Current Source: BUS #1 to Positive and BUS #3 to Negative
Use a 3457 or equilvent DVM and record measurement to 4 decimal places
Use 2 wires Voltage Measurements Technique:
1. Connect DVM LO wire to BUS#3 (or Negative output of Power source)
2. HI wire of DVM will move through breakout box to measure V
DO NOT USE DC CURRENT LARGER THAN 2A.
DO NOT RUN DC CURRENT THROUGH MAGNET LONGER THAN 30MIN.

BUS #1
BUS #2
BUS #3
BUS #4

POWER BUS LOCATION

HYPERTRONICS CONNECTOR		FNAL Labels	Description	Break Box Labels	Expected Voltage, V	Measured, V	
Module	Pin						
M3	4	VTa1Q2a	Q2a Lead Voltage Tap "a", primary	EE1112	0.0500	9.847mV	
M3	3	VTa2Q2a	Q2a lead Voltage Tap "a", redundant	EE1122	0.0500	9.848mV	
M4	3	VTb1Q2a	Q2a Lead Voltage Tap "b", primary	EE1312	2.2000	2.3255V	NOTE: THIS VALUE SHOULD BE BETWEEN 10
M4	4	VTb2Q2a	Q2a Lead Voltage Tap "b", redundant	EE1322	2.2000	2.3256V	AND 100 MV LOWER THAN EE1612 & EE1622
M3	1	VTc1Q2a	Q2a Center Voltage Tap "c", primary	EE1212	1.2000	1.1685V	
M4	1	VTc2Q2a	Q2a Center Voltage Tap "c", redundant	EE1222	1.2000	1.1685V	
M3	2	VTdQ2a	Q2a Quarter Coil Voltage Tap "d" (1-3 interface)	VTdQ2a	0.6000	589.2mV	NOT USED AT CERN
M4	2	VTeQ2a	Q2a Quarter Voltage Tap "e", (2-4 interface)	VTeQ2a	1.7000	1.7465V	NOT USED AT CERN
M6	1	VTa1Q2b	Q2b Lead Voltage Tap "a", primary	EE1412	4.6000	4.6436V	
M6	2	VTa2Q2b	Q2b Lead Voltage Tap "a", redundant	EE1422	4.6000	4.6437V	
M4	5	VTb1Q2b	Q2b lead Voltage Tap "b", primary	EE1612	2.3000	2.338V	NOTE: THIS VALUE SHOULD BE BETWEEN 10
M5	5	VTb2Q2b	Q2b Lead Voltage Tap "b" redundant	EE1622	2.3000	2.339V	AND 100 MV HIGHER THAN EE1312 & EE1322
M5	3	VTc1Q2b	Q2b Center Voltage Tap "c", primary	EE1512	3.5000	3.4889V	
M5	2	VTc2Q2b	Q2b Center Voltage Tap "c", redundant	EE1522	3.5000	3.4890V	
M5	1	VTdQ2b	Q2b Quarter Coil Voltage Tap "d" (1-3 interface)	VTdQ2b	4.0000	4.0664V	NOT USED AT CERN
M5	4	VTeQ2b	Q2b Quarter Voltage Tap "e", (2-4 interface)	VTeQ2b	3.0000	2.9117V	NOT USED AT CERN

4/2005

Form #2 CRYO HEATER CHECK_OUT

MEASURE RESISTANCE ACROSS EACH HEATER USING HANDHELD METER
MEASURE RESISTANCE FROM HEATER TO GND USING HANDHELD METER

Module	Pin		Expected Resistance, OHM	Measured Resistance, OHM	FNAL Label	Description
M11	1	EH8312+	17	18.21	W1aQ2A	Q2A Cryogenic Heater lead end - wire toward cold mass end plate (CERN #1 I+)
M11	2	EH8312-			W2aQ2A	Q2A Cryogenic Heater lead end - wire toward cold mass mag center (CERN #1 I-)
M11	3	EH8322+	17	17.92	W1bQ2A	Q2A Cryogenic Heater non-lead end- wire toward cold mass end plate (CERN #2 I+)
M11	4	EH8322-			W2bQ2A	Q2A Cryogenic Heater non-lead end- wire toward cold mass mag center (CERN #2 I-)
M12	1	EH8332+	17	17.55	W1aQ2B	Q2B Cryogenic Heater lead end - wire toward cold mass end plate (CERN #1 I+)
M12	2	EH8332-			W2aQ2B	Q2B Cryogenic Heater lead end - wire toward cold mass mag center (CERN #1 I-)
M12	3	EH8342+	17	17.84	W1bQ2B	Q2B Cryogenic Heater non-lead end- wire toward cold mass end plate (CERN #2 I+)
M12	4	EH8342-			W2bQ2B	Q2B Cryogenic Heater non-lead end- wire toward cold mass mag center (CERN #2 I-)

M11	1	EH8312+	more than 20MOHM	Inf	W1aQ2A	Q2A Cryogenic Heater lead end - wire toward cold mass end plate (CERN #1 I+)
		GND				
M11	3	EH8322+	more than 20MOHM	Inf	W1bQ2A	Q2A Cryogenic Heater non-lead end- wire toward cold mass end plate (CERN #2 I+)
		GND				
M12	1	EH8332+	more than 20MOHM	Inf	W1aQ2B	Q2B Cryogenic Heater lead end - wire toward cold mass end plate (CERN #1 I+)
		GND				
M12	3	EH8342+	more than 20MOHM	Inf	W1bQ2B	Q2B Cryogenic Heater non-lead end- wire toward cold mass end plate (CERN #2 I+)
		GND				

Form #3 PROTECTION STRIP HEATERS

MEASURE RESISTANCE ACROSS EACH HEATER USING HANDHELD METER
MEASURE RESISTANCE FROM HEATER TO GND USING HANDHELD METER
MEASURE RESISTANCE FROM HEATER TO COIL USING HANDHELD METER

Module	Pin	Breakout BOX Labels	Expected Resistance, OHM	Measured Resistance OHM	FNAL Label	Description
M15	2	YT1112+	20	20.11	H1aQ2a	Q2a Protection (Strip) Heater, 1-4 & 2-3 circuit (FNAL lead A+) (CERN lead #1+)
M16	1	YT1112-			H2aQ2a	Q2a Protection (Strip) Heater, 1-4 & 2-3 circuit (FNAL lead A-) (CERN lead #1-)
M16	3	YT1122+	20	20.14	H1bQ2a	Q2a Protection (Strip) Heater, 1-2 & 3-4 circuit (FNAL lead B+) (CERN lead#2+)
M16	5	YT1122-			H2bQ2a	Q2a Protection (Strip) Heater, 1-2 & 3-4 circuit (FNAL lead B-) (CERN lead #2-)
M17	2	YT1132-	20	19.37	H2aQ2b	Q2b Protection (Strip) Heater, 1-4 & 2-3 circuit (FNAL lead A-) (CERN lead #1-)
M17	4	YT1132+			H1aQ2b	Q2b Protection (Strip) Heater, 1-4 & 2-3 circuit (FNAL lead A+) (CERN lead #1+)
M18	1	YT1142+	20	19.31	H1bQ2b	Q2b Protection (Strip) Heater, 1-2 & 3-4 circuit (FNAL lead B+) (CERN lead#2+)
M18	3	YT1142-			H2bQ2b	Q2b Protection (Strip) Heater, 1-2 & 3-4 circuit (FNAL lead B-) (CERN lead #2-)
M15	2	YT1112+	more than 20MOHM	INF	H1aQ2a	Q2a Protection (Strip) Heater, 1-4 & 2-3 circuit (FNAL lead A+) (CERN lead #1+)
		GND				
M16	3	YT1122+	more than 20MOHM	INF	H1bQ2a	Q2a Protection (Strip) Heater, 1-2 & 3-4 circuit (FNAL lead B+) (CERN lead#2+)
		GND				
M17	2	YT1132-	more than 20MOHM	INF	H2aQ2b	Q2b Protection (Strip) Heater, 1-4 & 2-3 circuit (FNAL lead A-) (CERN lead #1-)
		GND				
M18	1	YT1142+	more than 20MOHM	INF	H1bQ2b	Q2b Protection (Strip) Heater, 1-2 & 3-4 circuit (FNAL lead B+) (CERN lead#2+)
		GND				
M15	2	YT1112+	more than 20MOHM	INF	H1aQ2a	Q2a Protection (Strip) Heater, 1-4 & 2-3 circuit (FNAL lead A+) (CERN lead #1+)
		COIL				
M16	3	YT1122+	more than 20MOHM	INF	H1bQ2a	Q2a Protection (Strip) Heater, 1-2 & 3-4 circuit (FNAL lead B+) (CERN lead#2+)
		COIL				
M17	2	YT1132-	more than 20MOHM	INF	H2aQ2b	Q2b Protection (Strip) Heater, 1-4 & 2-3 circuit (FNAL lead A-) (CERN lead #1-)
		COIL				
M18	1	YT1142+	more than 20MOHM	INF	H1bQ2b	Q2b Protection (Strip) Heater, 1-2 & 3-4 circuit (FNAL lead B+) (CERN lead#2+)
		COIL				

Form#4 RTDs Measurements

MEASURE RESISTANCE ACROSS EACH RTD USING A FOUR WIRE METER
MEASURE RESISTANCE FROM RTD TO GROUND USING HANDHELD METER

Module	Pin	Breakout BOX Labels	Expected Resistance, OHM	Measured Resistance OHM	FNAL Label	Description
M20	9	TT8312 I+	57	65.981	TaQ2a_I+	Q2a RTD, primary Wire color: Yellow
M20	8	TT8312 I-			TaQ2a_I-	Q2a RTD, primary Wire color: Green
M20	7	TT8312 U+			TaQ2a_V+	Q2a RTD, primary Wire color: Black
M20	12	TT8312 U-			TaQ2a_V-	Q2a RTD, primary Wire color: Red
M20	13	TT8322 I+	57	66.157	TbQ2a_I+	Q2a RTD, redundant: Wire color: Yellow
M20	14	TT8322 I-			TbQ2a_I-	Q2a RTD, redundant: Wire color: Green
M20	15	TT8322 U+			TbQ2a_V+	Q2a RTD, redundant: Wire color: Black
M20	16	TT8322 U-			TbQ2a_V-	Q2a RTD, redundant: Wire color: Red
M21	1	TT8332 I+	57	65.006	TaQ2b_I+	Q2b RTD, primary Wire color: Yellow
M21	2	TT8332 I-			TaQ2b_I-	Q2b RTD, primary Wire color: Green
M21	3	TT8332 U+			TaQ2b_V+	Q2b RTD, primary Wire color: Black
M21	4	TT8332 U-			TaQ2b_V-	Q2b RTD, primary Wire color: Red
M21	5	TT8342 I+	57	70.731	TbQ2b_I+	Q2b RTD, redundant: Wire color: Yellow
M21	6	TT8342 I-			TbQ2b_I-	Q2b RTD, redundant: Wire color: Green
M21	11	TT8342 U+			TbQ2b_V+	Q2b RTD, redundant: Wire color: Black
M21	10	TT8342 U-			TbQ2b_V-	Q2b RTD, redundant: Wire color: Red
M20	9	TT8312 I+	more than 20MOHM	INF	TaQ2a_I+	Q2a RTD, primary Wire color: Yellow
		GND				
M20	13	TT8322 I+	more than 20MOHM	INF	TbQ2a_I+	Q2a RTD, redundant: Wire color: Yellow
		GND				
M21	1	TT8332 I+	more than 20MOHM	INF	TaQ2b_I+	Q2b RTD, primary Wire color: Yellow
		GND				
M21	5	TT8342 I+	more than 20MOHM	INF	TbQ2b_I+	Q2b RTD, redundant: Wire color: Yellow
		GND				

XXX	V2A	V2B	H2A	H2B
XXX	V1A	V1B	H1A	H1B

POSITION OF CCOIL BUS

Form#5 Correction COILs

MEASURE RESISTANCE ACROSS BOTH CCOIL BUSES
MEASURE RESISTANCE FROM CCOIL TO GROUND
MEASURE RESISTANCE BETWEEN BOTH TAPS
MEASURE RESISTANCE FROM EACH TAP TO CCOIL BUS
MEASURE CONTINUITY OF Q1 CCOIL BUS

			Expected	Measured		
Horizontal Corrector Coil resistance						
H2-A	CCOIL BUS #1		22.5 OHMS	21.46		
H2-B	CCOIL BUS #2					
	Vertical Corrector Coil resistance					
V2-A	CCOIL BUS #3		19 OHMS	17.79		
V2-B	CCOIL BUS #4					
H2-A	CCOIL BUS #1		more than 20MOHM	INF		
	GND					
V2-A	CCOIL BUS #3		more than 20MOHM	INF		
	GND					
M8	3	**EE8122**	more than 20MOHM	INF	*VTH2*	*Corrector voltage tap Q2-H2 (skew dipole) (on MCBX, MCBXH, A+ lead)*
M8	4	**EE8112**			*VTV2*	*Corrector voltage tap Q2-V2 (normal dipole) (on MCBX, MCBXV, A+ lead)*
M8	3	**EE8122**	less than 5 OHMS	1.6	*VTH2*	*Corrector voltage tap Q2-H2 (skew dipole) (on MCBX, MCBXH, A+ lead)*
		Ccoil Bus#1				
M8	4	**EE8112**	less than 5 OHMS	2.04	*VTV2*	*Corrector voltage tap Q2-V2 (normal dipole) (on MCBX, MCBXV, A+ lead)*
		Ccoil Bus#3				
M8	3	**EE8122**	more than 14 OHMS	22.71	*VTH2*	*Corrector voltage tap Q2-H2 (skew dipole) (on MCBX, MCBXH, A+ lead)*
		Ccoil Bus#2				
M8	4	**EE8112**	more than 14 OHMS	18.74	*VTV2*	*Corrector voltage tap Q2-V2 (normal dipole) (on MCBX, MCBXV, A+ lead)*
		Ccoil Bus#4				

CHECK CONTINUITY OF Q1 CCOIL BUS

FEED END	RETURN END	EXPECTED	MEASURED
V1-A	V1-A	LESS THAN 4 OHMS	3.5 OHMS
V1-B	V1-B	LESS THAN 4 OHMS	3.6 OHMS
H1-A	H1-A	LESS THAN 4 OHMS	3.5 OHMS
H1-B	H1-B	LESS THAN 4 OHMS	3.7 OHMS

Form#6 Feed through Test

MEASURE RESISTANCE BETWEEN ALL 24-Q1 FEED THROUGH SIGNALS

	EXPECTED	OK???
EE1111	< 1 OHM	YES
EE1121	< 1 OHM	YES
EE1211	< 1 OHM	YES
EE1221	< 1 OHM	YES
EE1311	< 1 OHM	YES
EE1321	< 1 OHM	YES
EE8121	< 1 OHM	YES
EE8111	< 1 OHM	YES
EH8311+	< 1 OHM	YES
EH8311-	< 1 OHM	YES
EH8321+	< 1 OHM	YES
EH8321-	< 1 OHM	YES
YT1111+	< 1 OHM	YES
YT1111-	< 1 OHM	YES
YT1121+	< 1 OHM	YES
YT1121-	< 1 OHM	YES
TT8311I+	< 1 OHM	YES
TT8311I-	< 1 OHM	YES
TT8311U+	< 1 OHM	YES
TT8311U-	< 1 OHM	YES
TT8321I+	< 1 OHM	YES
TT8321I-	< 1 OHM	YES
TT8321U+	< 1 OHM	YES
TT8321U-	< 1 OHM	YES

Traveler Title:	Specification No:	Revision:	DR No:
Q2 LMQXB Cold Mass Module Assembly Traveler	5520-TR-333643	G	4302

Step No:	Drawing No:	Routing Form No:	Serial No:	Rework ID:
7.19	369897		LMQXB10	0

Discrepancy Description:

Instrumentation wires (reused from LMQXB-02) are approx. 18" shorter than print spec.

Originator: Damon Bice

Date: 10/19/2005 9:58:11 AM

Cause of Nonconformance:

Wires were reused from an earlier magnet and had to be cut off.

Responsible Authority: Rodger Bossert

Date: 6/10/2006 12:41:45 PM

Disposition:

Use wires as they are. There is still sufficient extra length.

Responsible Authority: Rodger Bossert

Date: 6/10/2006 12:41:45 PM

Corrective Action to Prevent Recurrence:

None. This is the only occasion that we expect to re-use wires from a previous magnet. If it does happen again, we will use them only if they are sufficiently long enough.

Responsible Authority: Rodger Bossert

Date: 6/10/2006 12:41:45 PM

Corrective Action/Disposition Verified By: Bob Jensen

Date: 6/26/2006 1:22:58 PM

Will Configuration be affected?: ☐ YES ☑ NO

Identified problem area:

☐ Material ☐ Manpower ☑ Method ☐ Machine ☐ Measurement

Reviewed By: Bob Jensen

Date: 6/26/2006 1:27:02 PM

Traveler Title:	Specification No:	Revision:	DR No:
Q2 LMQXB Cold Mass Module Assembly Traveler	333643	G	4309

Step No:	Drawing No:	Routing Form No:	Serial No:	Rework ID:
13.4	369895		LMQXB10	0

Discrepancy Description:

Magnet failed its Coils to everything else hipot. The hipotter said it failed at 1962V with an over-current.

Originator: Steve Gould

Date: 11/7/2005 7:52:35 AM

Cause of Nonconformance:

Most likely an insulation failure between the leads and through buses at Q2a end (spark heard).

Responsible Authority: Andy Hocker

Date: 11/7/2005 10:49:17 AM

Disposition:

Cut off end dome and inspect leads/buses.

Responsible Authority: Andy Hocker

Date: 11/7/2005

Corrective Action to Prevent Recurrence:

To be determined.
Disposition verify notes: (Magnet was repaired and inspection was accepetable. Bob Jensen 1/26/06)

Responsible Authority: Andy Hocker

Date: 11/7/2005

Corrective Action/Disposition Verified By: Bob Jensen

Date: 1/26/2006 3:10:03 PM

Will Configuration be affected?: ☐ YES ☑ NO

Identified problem area:

☐ Material ☐ Manpower ☐ Method ☐ Machine ☑ Measurement

Reviewed By: Bob Jensen

Date: 1/30/2006

Revision Request Control Number: 1801

Specification Number: 5520 - TR - 333643 Current Revision: G

Traveler or Document Title Q2 LMQXB Cold Mass Module Assembly Traveler

Step #/Description of Revision:

After step 11.6, an additional step is needed to perform a hipot from coils to ground @ 5kv. This test should be done with everything else grounded. I.E. heaters, RTD's, through bus etc.

After step 11.9, and additional step is needed to perform a hipot from coils to ground @ 5 kv. This test should be done with everything grounded. I.E. heaters, RTD's through bus etc.

After step 11.13, an additional step should be added to install center body tube, shimming accordingly.

Step 13.1 Page 56 Inductance Table, switch Quadrant #3 Lpot and Hpot. (See LMQXB10-0)

Step 13.4 Added Responsible Authority/Physicists sign-off.

Damon Bice	Jim Rife	1/17/2006
Originator	Responsible Authority	Date

Revision Incorporated into the Traveler:

	Revision Incorporated By	Date

Process Engineering Final Review:

	Process Engineering/Designee	Date

Instructions for the completion of the Revision Request Form

Note(s):

Multiple steps may be effected by one Revision Request Form but only one specific Traveler or Document may be effected by each Revision Request Form.

If completing this form by hand, a Revision Request Control Number must be obtained before processing.

If completing this form entirely by electronic means, the printed copy to be filed in the Process Engineering Office is to be initialed by the individual incorporating the Revision Request and the individual who reviewed the Traveler or Document.

Originator Instructions:

1) Specification Number: - Enter the Specification Number of the Traveler or Document to be revised. (Document title is inserted automatically from the spec. #)

2) Current Revision: - Enter the Revision of the Traveler or Document to be revised.

3) Step# / Description of the Revision: - Enter a description of the revision to be made and the step# it applies to, if applicable. If needed to describe the revision attach a copy of the page(s). If the revision is coming from a related document such as a Discrepancy Report or an Engineering Order attach a copy of that document to the Revision Request Form.

4) Originator: - Originator is the person generating the form. (Select Name from List)

5) Responsible Authority: - Responsible Authority is person responsible for the process in question. (Select Name from List)

Process Engineering Office Instructions:

1) Revision Incorporated into the Traveler: - Signature of the individual who incorporated the revision.

2) Process Engineering Final Review: - Review the Traveler or Document revised, sign and date the form. The original completed Revision Request Form will be retained by the Process Engineering Office in the Revision Request Binder.