Document ID: 8210

Q2 LQXB Cryostat Final Assembly Traveler

333644 / Rev. H

Job No: 248

E + F Project/Task No.: 300/1.1.1.6.2

M + S Project/Task No.: 300/1.1.1.6.2

Place This Side Down For Scanning!!!

Magnet Travelers

LQXB10-0

Document ID:

8210

Job No.:

248

Project/Task No.

300/1.1.1.6.2

Series:

LQXB

Serial No:

LQXB10

Rework ID:

0

Specification No.:

333644

Revision:

H

LQXB10-0

Fermi National Accelerator Laboratory
Batavia, IL 60510

LARGE HADRON COLLIDER
Q2-LQXB
CRYOSTAT FINAL ASSEMBLY TRAVELER

Reference Drawing(s):
Vacuum Vessel and Cryostat Assembly
(ME-390206)

Project/Task Number: *300/1.1.1.6.2*

Released By: *John Szostak* **Magnet/Device Series:** *LQXB*

Date Issued: *10/27/2005 7:34:06 AM* **Scanned Pages:** ~~49~~ 61

Prepared by: J. Szostak

Title	Signature	Date
TD / E&F Process Engineering	*Bob Jensen* Bob Jensen / Designee	*10/24/05*
TD / LHC Production Supervisor	*Jim Rife* Jim Rife / Designee	*10/24/05*
TD / LHC Production Engineer	*Rodger Bossert* Rodger Bossert / Designee	*10/24/05*
TD / LHC Production Engineer Cryostat	*Tom Page* Tom Page / Designee	*10/24/05*
TD / LHC Project Engineer Cryostat	*Tom Nicol* Tom Nicol / Designee	*10/24/05*
TD / LHC Program Manager	*Jim Kerby* Jim Kerby / Designee	*10/24/05*

Revision Page (1 of 5)

Revision	Step No.	Revision Description	TRR No.	Date
None	N/A	Initial Release	N/A	6/17/02
A	3.1	Removed Step. Not necessary.	1485	10/2/02
	3.2	Modified Step. Changed to "Add Insertion Rails per Vacuum Vessel Assembly (ME-390129)."		
	4.1	Modified Step. Added "Suspension System Adjusting Screw, M16 x 70mm SHCS and Washer" to the Parts table.		
	4.3	Modified step. "Install the Suspension System Adjusting Screws (MB-390039), M16 Screw and washer into the Vacuum Vessel to hold the Fixed Support Assembly in place. Coat all screw heads with Molybdenum disulfide prior to installation."		
	4.6	Modified step. "Install the Suspension System Adjusting Screws (MB-390039), M16 Screw and washer into the Vacuum Vessel to hold the Sliding Support Assemblies in place. Coat all screw heads with Molybdenum disulfide prior to installation."		
	4.11	Modified Step. "Slide the Suspension System over the Cold Mass and place on tooling. The Suspension system may be disassembled during this step. Record shim sizes and locations prior to disassembly." New Step 4.13.		
	5.1	Added Step. "Place the Cold mass assembly on the insertion rail system."		
	5.3	Added Step. "Install Cold mass Insulation per Cold mass Insulation Installation (ME-390302)."		
	5.5	Added Step. "Using Pipe Supports as a template, cut the blankets around the Pipe Support Feet and slit blankets circumferentially at the Pipe Supports."		
	5.6	Added Step. "Remove Pipe Supports and blankets. Wrap blankets in plastic bag to keep clean for later use. Label blankets as they are removed for later positioning."		
	5.7	Added Step. "Install Pipe Supports to same location as in step 5.4."		
	5.16	Added Step. "Weld the Pipe Support Gussets to the Cold mass per Q2 Piping Assembly (ME-390208)."		
	6.0	Modified Steps per Tom Page.		
	7.1	Modified Steps per Tom Page.		
	7.2	Modified Steps per Tom Page.		
	7.3	Modified Steps per Tom Page.		
	7.4	Modified Steps per Tom Page.		
	7.5	Modified Steps per Tom Page.		
B	4.1	Modified Step. Changed to "Label the IP End and the Non-IP End of the Vacuum Vessel with a temporary sticker or equivalent." per Jim Rife.	1539	12/16/04
	5.0	Added Note "**Note(s): Do not use a strap wrench on the pipes.**" per **DR No. HGQ-0394.**		

Revision Page (2 of 5)

Revision	Step No.	Revision Description	TRR No.	Date
C	3.2	Added Step. "Inspect the transition area between the support sections and tube sections. Grind smooth if necessary."	1570	11/18/03
	3.3	Added Step. "Clean the Vacuum Vessel using a vacuum cleaner or equivalent."		
	3.8	Modified Step. Added "Tap out holes with M10 – 1.5 Tap. Move Vessel to Table."		
	4.9	Added Step. "Measure the distance between the Suspension Rings at the bottom of the Threaded Rods. Install Threaded Rods after measurements."		
	4.10	Modified Step. Moved "Configure the Suspension Tooling for Q2 Assembly per (ME-364604). Place Suspension Assembly on the tooling and make necessary adjusts to the tooling." to New step 4.11.		
	4.16	Modified Step. Added "Install shims between the Brass Slide Bars and the Stainless Steel Blocks on each support as needed. Record Shim size and location below." New Step 4.17.		
	5.0	Modified, rearranged and added steps from step 5.13 to 5.35, per Notes taken by Steve Gould and Tom Page on LQXB02.		
	5.8	Added Step. "Install Q2 Installation Tie Rod Assembly (MC-390635) and Tie Bar Retaining Clamp (MB-390136) as per Q2 Cryostat Assembly - Internal Piping (ME-390208)." per traveler LQXB03-0.		
	5.18	Modified Step. Changed Quantity from 2 ea to 4 ea. "...Pumping Line Pipe Stop (MB-390149), (4 ea.) and Cool Down Line Pipe Stop (MB-390150) (4 ea.)."		
	5.19	Modified Step. Changed Quantity from 2 ea to 4 ea. "...Pumping Line Pipe Stop (MB-390149), (4 ea.) and Cool Down Line Pipe Stop (MB-390150) (4 ea.)."		
	5.20	Modified Step. Changed Technician Signoff to Weldor Signoff.		
	5.21	Modified Step. Changed to "Clean the following parts fromQ2 Heat Exchanger Corrugated Tube Assembly (ME-390143)." Added Table. New step 5.35.		
	5.22	Modified Step. Moved to after Suspension System Adjusting Screws are installed. New Step 7.7		
	5.23	Modified Step. Moved to after Suspension System Adjusting Screws are installed. New Step 7.8		
	6.1	Moved Step. Moved to New Step 6.2. "Install the Cold mass MLI Blankets per (ME-390302) and in the same position as Step 5.6." Cannot Lift Cold Mass with Blankets installed.		
	6.2	Moved Step. Moved to New Step 6.1. "Lift the Cold Mass Assembly and place the Center Section (ME-390164) and End Sections (ME-390162) on the Insertion Rails. Lower the Cold mass back onto the rails ensuring the holes in the Shield Sections line up with Support Rollers."		
	7.8	Removed Step. " Install the Conflat flanges with copper gaskets on the Vacuum Vessel as per the General Assembly (ME-390000)." Conflat Flanges installed in IB#1.		

Revision Page (3 of 5)

Revision	Step No.	Revision Description	TRR No.	Date
D	Cover Page	Modified. Added signoff for Rodger Bossert for Final Electrical Steps in traveler.	1586	2/2/04
	3.1	Added Step. "Record the Vacuum Vessel Serial Number." per Jim Rife.		
	4.9	Modified Step. Moved to after Leak Checks. (New Step 5.34)		
	4.11	Modified Step. Changed ½" to 2" per Steve Gould.		
	5.8	Added Step. "Install Q2 Installation Tie Rod Assembly (MC-390635) and Tie Bar Retaining Clamp (MB-390136) as per Q2 Cryostat Assembly - Internal Piping (ME-390208)."		
	5.15	Modified Step. Changed to Technician Signoff.		
	5.21	Removed Step. "Re-install the Threaded Rods and lock into place." per TR-333644, LQXB04.		
	5.22	Removed Step. "Perform a Stretched Wire Measurement." per TR-333644, LQXB04.		
	5.23	Removed Step. "Insert the Q2 Pumping Line Tube (MB-390147) and Q2 Cool Down Line Tube (MB-390146)." Completed in step 5.10.		
	5.24	Removed Step. "Weld Pumping Line End Flange (MA-390032) to the Q2 Pumping Line Tube (MB-390147)." Completed in step 5.12.		
	5.25	Removed Step. "Weld Cool Down Line End Flange (MA-390033) to the Q2 Cool Down Line Tube (MB-390146)." Completed in step 5.12.		
	6.9	Modified Step. Added "Tap the PEM nuts prior to installing shield. Use care in tightening screws so they don't break." per DR No. **HGQ-0441**.		
	7.6	Modified Step. Added Note. "**Note(s): Ensure proper lubrication on adjusting screws. Check threads on screw and vacuum vessel prior to assembly and fix if necessary.**"		
	8.0	Added Step. Added Final Electrical Inspection per Jim Rife.		
E	1.4	Removed Step. "All personnel performing steps in this traveler must have documented training for this traveler and associated operating procedures."	1639	12/17/04
	3.2	Removed Step. "Add Insertion Rails per Vacuum Vessel Assembly (ME-390129)." Insertion rails no longer used.		
	5.14	Moved Step. "Weld the Retainer Clips (MA-390103) to the Cold Mass Outer Shell as per the Pipe Support Assembly (ME-390087) or (ME-390208)." New step 5.8 per Tom Page & Steve Gould.		
	5.29	Removed Step. "Measure the distance between the Suspension Rings at the bottom of the Threaded Rods. Install Threaded Rods (MC-390635 and MA-393227) after measurements." per Tom Page. Steps completed previously.		
	5.30	Removed Step. "Install bottom of shield (ME-390162, Qty 2) (ME-390163, Qty 2) (ME-390164)." per Tom Page.		
	5.31	Removed Step. "Install Center Retainers (MA-390086) before installing Support Bands (ME-390083). Install Aluminum Spacers (MA-390373) and screws to the End Sections before attaching the Support Bands." per Tom Page.		
	6.1	Added Step. "Tap the PEM nuts prior to installing shield. Use care in tightening screws so they don't break." Per Tom Page.		
	6.8	Modified Step. Added "The center blanket may need to be rotated 90 degrees. Tape the seams instead of using the Velcro, if necessary." **DR No. HGQ-0466.**		
	6.9	Modified Step. Moved "Tap the PEM nuts prior to installing shield. Use care in tightening screws so they don't break." to new step 6.1.		
	6.10	Modified Step. Moved to after step 5.20 per Steve Gould.		
	7.1	Modified Step. Changed "Green Putty" to "Pig Putty" per LQXB07.		
	8.0	Modified Step. Added new method of measuring Ls &Q per Rodger Bossert.		
	9.0	Added Step. "Final Preparations"		

Revision Page (4 of 5)

Revision	Step No.	Revision Description	TRR No.	Date
F	1.6	Added Step. "Protect the bellows during all stages of production." **DR No. HGQ-0500.**	1709	2/28/05
	3.4	Modified Step. Changed to "Attach Leak Check sticker for the Vacuum Vessel Assembly (ME-390003) per ES-107240." Per LQXB08.		
	4.15	Added Step. "If needed, perform a stretched wire measurement of the system, noting the relative position and roll of the three magnetic elements to each other. Perform Stretched Wire Measurement?" per LQXB08.		
	5.6	Added Step. "Starting from the North Side of IP (or East) End of Magnet, mark the East End of the 1st blanket "1E" (1 East) and "1W" (1 West) as per Figure 5.6-A below. Label the next blanket in this fashion, incrementing the numerical value for each blanket as per Figure 5.6-A. When all blankets are installed on Cold Mass, blanket designations should be placed near the "Top" of the North side of the magnet as per Figure 5.6-A." Per production request.		
	5.7	Modified Step. Removed "Label blankets as they are removed for later positioning." Per new Step 5.6.		
	5.22	Modified Step. Moved Step to before Step 5.21 (Pressure testing the Cold Mass) per LQXB08.		
	5.23	Modified Step. Moved Step to before Step 5.21 (Pressure testing the Cold Mass) per LQXB08.		
	5.24	Modified Step. Moved Step to before Step 5.21 (Pressure testing the Cold Mass) per LQXB08.		
	5.25	Added Step. "Install the Fiducial Mounting Blocks (MB-390809) per Q2 Cold Mass Welded Assembly (ME-390309)." per LHC Production Engineer.		
	5.26	Added Step. "Weld the Fiducial Mounting Blocks (MB-390809) per Q2 Cold Mass Welded Assembly (ME-390309)." per LHC Production Engineer.		
	5.27	Added Step. "Prepare Cold Mass Assembly for Pressure Test at 375 psi." per LHC Production Engineer.		
	5.28	Added Step. "Verify Cold Mass Assembly is ready for Pressure Test at 375 psi." per LHC Production Engineer.		
	5.30	Modified Step. Moved to before Assembling the Corrugated Tube Assembly. Per LQXB08. (New Step 7.7).		
	8.1	Modified Step. Reversed H_{pot} and L_{pot} Voltage Taps for Inductance and Q-factor, in table, to allow for correct values taken at Q2a end of Magnet. Per LQXB08.		
	9.4	Removed Step. "Install the Vinyl Flange Covers (MA-390491), (MA-390492), (MA-390493), (MA-390494), & the Alignment Fiducial Covers (MA-390495)." Moved to Shipping Traveler.		
G	5.9	Modified Step. Changed to "Install Q2 Installation Tie Rod Assembly (MC-390635) as per Q2 Cryostat Assembly - Internal Piping (ME-390208)." Per **DR No HGQ-0483.**	1723	5/25/05
	5.21	Removed Step. Moved to New Step 5.10 "Install the Tie Bar Retaining Clamps (Qty. 8)(MB-390136) per Q2 Internal Piping Assembly (ME-390208)." Per **DR No HGQ-0483.**		
	8.1	Modified Step. Modified Electrical Table. Removed "Voltage Tap Serial Numbers".		

Revision Page (5 of 5)

Revision	Step No.	Revision Description	TRR No.	Date
G (Continued)	9.1	Modified Step. Changed Drawing No. from ME-390127 to ME-390206.	1723 (Continued)	5/25/05
	9.2	Modified Step. Changed Drawing No. from ME-390127 to ME-390206.		
	9.5	Added Step. "Ensure all Pipe Supports are in place." Per LHC Project Engineer Cryostat.		
	9.6	Added Step. "Perform a Final Stretched Wire measurement." Per TR-333755 - LQXA04.		
	9.7	Added Step. "Perform a Final Cryostat Pipe Survey measurement." Per TR-333755 - LQXA04.		
H	4.3	Modified Step. Changed to "Install the "Top" Suspension System Adjusting Screws (MB-390039) and the "Bottom" (C936 Bearing Bronze) Suspension System Adjusting Screws (MB-390878), M16 Screw and washer into the Vacuum Vessel to hold the Fixed Support Assembly in place. Coat all screw threads with Molybdenum disulfide prior to installation." **Per DR No. 4214.**	1749	10/24/05
	4.17	Modified Step. Changed to "Establish alignment between the Cold Mass and the Support system per Q2 Cryostat Assembly Internal Piping (ME-390208)." per LQXB09.		
	7.11	Modified Step. Changed to "At the **Q2a** end, measure and mark 1m 411.8 mm [55.58 in.] of the lead as per Q2 Module Assembly Q2a Lead End (ME-369895, sheet 3 of 4). Have Crew Chief verify the length and sign below." **Per DR No. 4165**		
	7.12	Added Step. "At the **Q2a** end, measure 1m 411.8 mm [55.58 in.] and cut the lead at the mark as per Q2 Module Assembly Q2a Lead End (ME-369895, sheet 3 of 4). Have a Weldor fuse the ends of the Superconducting Cable before shipping Magnet." **Per DR No. 4165**		
	7.13	Modified Step. Changed to "At the **Q2b** end, measure and mark 511.8 mm [20.15 in.] of the lead as per Q2 Module Assembly Q2b Lead End Details (ME-369895, sheet 2 of 4). Have Crew Chief verify the length and sign below." **Per DR No. 4165**		
	7.14	Added Step. "At the **Q2b** end, measure 511.8 mm [20.15 in.] and cut the lead at the mark as per Q2 Module Assembly Q2b Lead End Details (ME-369895, sheet 2 of 4). Have a Weldor fuse the ends of the Superconducting Cable before shipping Magnet." **Per DR No. 4165**		
	8.0	Modified Steps. Added Step Numbers and instructions to each individual signoff.		
	8.2	Modified Step. Changed Table per LQXB09. (New Step 8.13).		

Ensure appropriate memos and specific instructions are placed with the traveler before issuing the sub traveler binder to production.

1.0 General Notes

1.1 All steps that require a sign-off shall include the Technician/Inspectors first initial and full last name.

1.2 No erasures or white out will be permitted to any documentation. All incorrectly entered data shall be corrected by placing a single line through the error, initial and date the error before adding the correct data.

1.3 All Discrepancy Reports issued shall be recorded in the left margin next to the applicable step.

1.4 Personnel shall perform all tasks in accordance with current applicable ES&H guidelines and those specified within the step.

1.5 Cover the product/assembly with Green Herculite (Fermi stock 1740-0100) when not being serviced or assembled.

1.6 Protect the Bellows during all stages of production.

2.0 Parts Kit List

2.1 Attach the completed Parts Kit for this production operation to this traveler. Ensure that the serial number on the Parts Kit matches the serial number of this traveler. Verify that the Parts Kit received is complete.

John J. Krosnak
Process Engineering Designee

10/27/05
Date

3.0 Vacuum Vessel Preparation and Painting

3.1 Record the Vacuum Vessel Serial Number.

Q2-4

Technician(s) Date 11/11/05

3.2 Inspect the transition area between the support sections and tube sections. Grind smooth if necessary.

Technician(s) Date 11/11/05

3.3 Clean the Vacuum Vessel using a vacuum cleaner or equivalent.

Technician(s) Date 11/11/05

3.4 Attach Leak Check sticker for the Vacuum Vessel Assembly (ME-390003) per ES-107240.

Part No.

DETERMINATION OF DETECTABLE LEAK

PART NO. 390129B		SCALE UNITS BEFORE HELIUM PROBE	SCALE UNITS WHILE ENCLOSURE FLOODING	Q2-4 DETERMINATION OF MINIMUM DETECTABLE LEAK				
DATE TIME	OPERATOR'S LAST NAME			MDS	((Response	Bckgnd)	Leak Value)	MDL
8.30.02	[illegible]	77	77	2	190	77	2.85E-8	5.5E-2

Technician(s) Date 11/11/05

3.5 Prepare the outside of the Vacuum Vessel (ME-390003) for painting by cleaning with Ethyl Alcohol (Fermi stock 1920-0550) and Kimwipes (Fermi stock 1660-2500) or equivalent.

Technician(s) Date 11/11/05

WAQNB LISA 3.6 Mask the Stainless Steel Components of the Vacuum Vessel for painting.

Technician(s) Date 11/10/05

3.7 Prime the Vacuum Vessel using Rust-o-leum (Fermi stock 1825-4000).

Technician(s) _____ Date 11/10/05

3.8 Verify that the Screws (MA-393036) will thread easily into the appropriate holes in the Vacuum Vessel (ME-390126). If necessary, tap out holes with M10 – 1.5 Tap. Move Vessel to Table.

Lead Person _____ Date 11/11/05

3.9 Paint the Vacuum Vessel using Flambeau Red (Fermi stock 1825-3710).

Vacuum Vessel
(ME-390129)

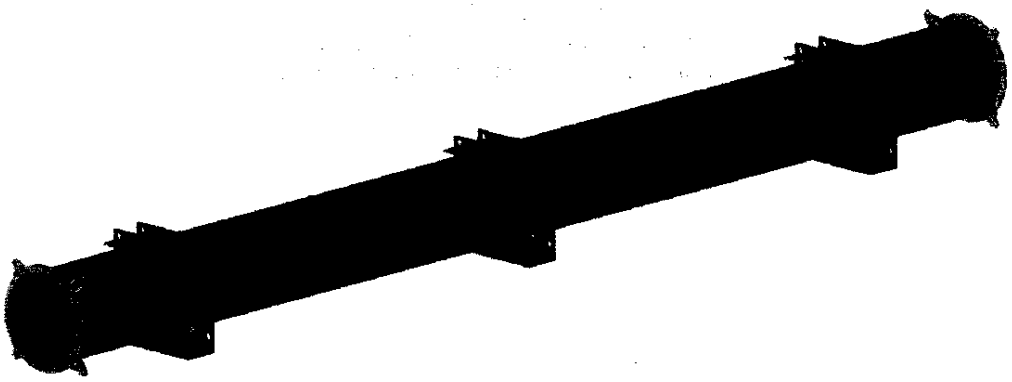

Technician(s) _____ Date 11/10/05

4.0 Suspension System

4.1 Clean the Suspension System with Ethyl Alcohol (Fermi stock 1920-0550) and Kimwipes (Fermi stock 1660-2500) or equivalent.

Part Name	Part Number	Quantity	Completed
Fixed Support Assembly	**(ME-390041)**	**1**	✓
Sliding Support Assembly	**(ME-390042)**	**2**	✓
Tie Bar Assembly	**(ME-390167)**	**4**	✓
Tie Bar Shim, .250"	**(ME-390118)**	**6**	✓
Tie Bar Shim, .093"	**(ME-390119)**	**6**	✓
Tie Bar Shim, .031"	**(ME-390120)**	**6**	✓
Suspension System Adjusting Screw	**(MB-390039)**	**12**	✓
M16 x 70mm SHCS	**(MA-393021)**	**12**	✓
Washer	**(MA-390377)**	**12**	✓

Label the IP End and the Non-IP End of the Vacuum Vessel with a temporary sticker or equivalent.

Technician(s) _____ Date 11/11/05

4.2 Insert the Fixed Support Assembly (ME-390041) into the vacuum vessel and position at the center support.

Technician(s) _____ Date 11/12/05

4.3 Install the "Top" Suspension System Adjusting Screws (MB-390039) and the "Bottom" (C936 Bearing Bronze) Suspension System Adjusting Screws (MB-390878), M16 Screw and washer into the Vacuum Vessel to hold the Fixed Support Assembly in place. Coat all screw threads with Molybdenum disulfide prior to installation.

[redacted]

Technician(s) _____ Date 11/12/05

4.4 Adjust the Vertical and rotational alignment of the Supports using the Suspension System Adjusting Screws (MB-390039). Ensure all four screws are in contact with the Support and that Diametrically Opposing Support Lugs are equidistant from the Vacuum Vessel Wall.

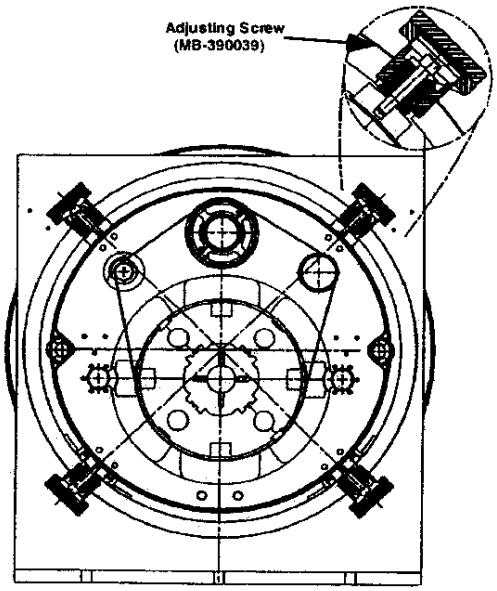

Technician(s) _____ Date 11/12/05

4.5 Insert the Sliding Support Assemblies (ME-390042) in to the Vacuum Vessel and position at each of the outboard support sections.

Technician(s) Date 11/12/05

4.6 Install the Suspension System Adjusting Screws (MB-390039), M16 Screw and washer into the Vacuum Vessel to hold the Fixed Support Assembly in place. Coat all screw threads with Molybdenum disulfide prior to installation.

[redacted]

Technician(s) Date 11/12/05

4.7 Adjust the Vertical and rotational alignment of the Supports using the Suspension System Adjusting Screws (MB-390039). Ensure all four screws are in contact with the Support and that Diametrically Opposing Support Lugs are equidistant from the Vacuum Vessel Wall.

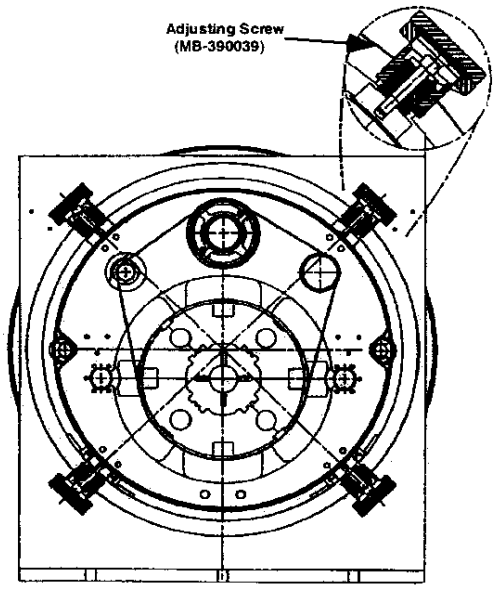

Technician(s) Date 11/12/05

4.8 Assemble the Suspension System using the Fixed Support Assembly (ME-390041), the Sliding Support Assemblies (ME-390042) and the Tie Bar Assemblies (MC-390167). Insert Tie Bar Shims (MC-390118),(MB-390119) and (MB-390120) between the Sliding Support Assemblies (ME-390042) and the Tie Bar Assemblies (MC-390167) as required. (Reference drawing: ME-390310)

Technician(s) _____ Date 11/12/05

4.9 Label the IP End Support and the Non-IP End Support. (Writing on the G-11 Support is acceptable).

Technician(s) _____ Date 11/12/05

4.10 Loosen each Suspension System Adjusting Screw (MB-390039) 2 turns and remove the Suspension System from the Vacuum Vessel.

Technician(s) _____ Date 11/12/05

4.11 Configure the Suspension Tooling for Q2 Assembly per (ME-364604). Place Suspension Assembly on the tooling and make necessary adjusts to the tooling.

Technician(s) _____ Date 11/15/05

4.12 Assemble the Outboard Suspension Mounting Brackets (MD-390280) to the Sliding Support Assemblies (outboard supports, ME-390042).

Technician(s) _____ Date 11/15/05

4.13 Assemble the Center Suspension Mounting Brackets (MD-390281) to the Sliding Fixed Assemblies (center support, ME-390041).

Technician(s) _____ Date 11/15/05

4.14 Slide the Suspension System over the Cold Mass and place on tooling. The Suspension system may be disassembled during this step. Record shim sizes and locations prior to disassembly.

Note(s):

Ensure that the Suspension System is configured properly to the Cold Mass with respect to the IP and Non-IP Ends.

Technician(s) _____ Date 11/15/05

4.15 If needed, perform a stretched wire measurement of the system, noting the relative position and roll of the three magnetic elements to each other.

Perform Stretched Wire Measurement?

Yes ☐

No ☒

STOP

Responsible Authority/Physicist _____ Date 11/15/05

4.16 Verify locking collars exist only at center support.

STOP

Lead Person _____ Date 11/15/05

4.17 Establish alignment between the Cold Mass and the Support system per Q2 Cryostat Assembly Internal Piping (ME-390208). Install shims between the Brass Slide Bars and the Stainless Steel Blocks on each support as needed.

Record Shim size and location below.

East-North .040 **East-South** .040

Center-North .015 **Center-South** .010

West-North .040 **West-South** .040

Technician(s) Date 11/15/05

4.18 Verify the Alignment of the Cold Mass and the Support System.

Crew Chief Date 11-16 05

4.19 Weld the Cold Mass to the Outboard Cold Mass Brackets as per (ME-390310).

Weldor(s) Date 11/16/05

5.0 Piping Assembly

Note(s):
Do not use a Strap Wrench on the Pipes.

5.1 Place the Cold Mass Assembly on the insertion rail system.

Technician(s) _____ Date 11-16-05

5.2 Clean the Pipe Supports with Ethyl Alcohol (Fermi stock 1920-0550) and Kimwipes (Fermi stock 1660-2500) or equivalent.

Technician(s) _____ Date 11-16-05

5.3 Install Cold mass Insulation per Cold mass Insulation Installation (ME-390302).

Technician(s) NA Date _____

5.4 Install the Pipe Supports (MD-390258)(Qty. 4) on the Cold Mass per (ME-390208).

Note(s):
A Tie Bar may be disconnected, if necessary, from the Fixed Support Assembly to install the central two pipe supports.

PIPE SUPPORT ASSEMBLY

Technician(s) _____ Date 11/16/05

5.5 Using Pipe Supports as a template, cut the blankets around the Pipe Support Feet and slit blankets circumferentially at the Pipe Supports.

NA
Technician(s) Date

5.6 Starting from the North Side of IP (or East) End of Magnet, mark the East End of the 1st blanket "1E" (1 East) and "1W" (1 West) as per Figure 5.6-A below. Label the next blanket in this fashion, incrementing the numerical value for each blanket as per Figure 5.6-A. When all blankets are installed on Cold Mass, blanket designations should be placed near the "Top" of the North side of the magnet as per Figure 5.6-A.

INSTALLING BLANKETS

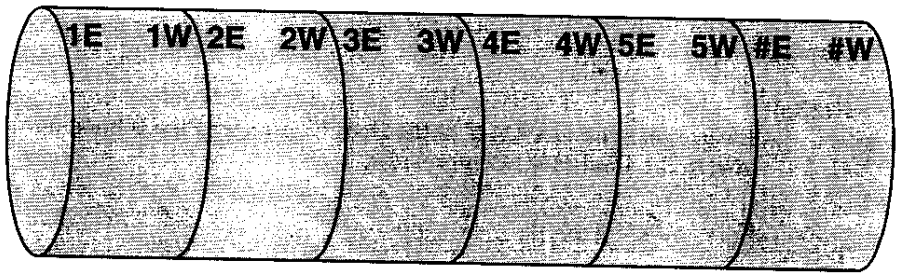

IP END **NON-IP END**

(View from "North" End of Magnet looking "South")

Figure 5.6-A

NA
Technician(s) Date

5.7 Remove Pipe Supports and blankets. Wrap blankets in plastic bag to keep clean for later use.

NA
Technician(s) Date

5.8 Install Pipe Supports to same location as in step 5.4.

N/A
Technician(s) Date

5.9 Weld the Retainer Clips (MA-390103) to the Cold Mass Outer Shell as per the Pipe Support Assembly (ME-390087) or (ME-390208).

Weldor(s) Date 11-16-05

5.10 Install Q2 Installation Tie Rod Assembly (MC-390635) as per Q2 Cryostat Assembly - Internal Piping (ME-390208).

Technician(s) Date 11-16-05

5.11 Install the Tie Bar Retaining Clamps (Qty. 8)(MB-390136) per Q2 Internal Piping Assembly (ME-390208).

Technician(s) _____ Date 11-16-05

5.12 Clean the Q2 Heat Exchanger Outer Shell (MD-390145), Q2 Pumping Line Tube (MB-390147) and the Q2 Cool Down Line Tube (MB-390146) with Ethyl Alcohol (Fermi stock 1920-0550) and Kimwipes (Fermi stock 1660-2500) or equivalent.

Technician(s) _____ Date 11/16/05

5.13 Slide the Q2 Heat Exchanger Outer Shell (MD-390145), Q2 Pumping Line Tube (MB-390147) and the Q2 Cool Down Line Tube (MB-390146) through all seven supports.

Note(s):

Ensure the cross over hole in the Heat Exchanger Pipe is lined up with the hole in the Cold Mass Center Tube.

Technician(s) _____ Date 11-17-05

5.14 Clean the Pumping Line Flanges (MB-390032), the Cool Down Line Flanges (MB-390033) and the Heat Exchanger Outer Shell Flanges (MB-390031) with Ethyl Alcohol (Fermi stock 1920-0550) and Kimwipes (Fermi stock 1660-2500) or equivalent.

Technician(s) _____ Date 11/17/05

5.15 Weld the Heat Exchanger Outer Shell Flanges (MB-390031), the Pumping Line Flanges (MB-390032) and the Cool Down Line Flanges (MB-390033) to the ends of the corresponding pipes.

Weldor(s) _____ Date 11/18/05

5.16 Clean the Cold Mass and the Retainer Clips (MA-390103) with Ethyl Alcohol (Fermi stock 1920-0550) and Kimwipes (Fermi stock 1660-2500) or equivalent.

Technician(s) _____ Date 11-17-05

5.17 Clean the Pipe Support Gussets with Ethyl Alcohol (Fermi stock 1920-0550) and Kimwipes (Fermi stock 1660-2500) or equivalent.

Technician(s) _____ Date 11-17-05

5.18 Weld the Pipe Support Gussets to the Cold mass per Q2 Piping Assembly (ME-390208).

Weldor(s) Date 11/16/05

5.19 Clean the Heat Exchanger Connection (MC-390111) with Ethyl Alcohol (Fermi stock 1920-0550) and Kimwipes (Fermi stock 1660-2500) or equivalent.

Technician(s) Date 11-17-05

5.20 Install the Connector (Heat Exchanger to Cold Mass) (MC-390111). Verify alignment and then purge Cold Mass and Q2 Heat Exchanger Outer Shell (MD-390145), with Argon Gas.

Technician(s) Date 11-17-05

5.21 Weld the Connector (Heat Exchanger to Cold Mass) (MC-390111) to the Q2 Heat Exchanger Outer Shell (MD-390145) and to the Cold Mass Center Tube per (ME-390208, Section F-F).

Weldor(s) Date 11/17/05

5.22 Insert 4.5k Intercept Line Pipes per (ME-390208).

Technician(s) Date 11-18-05

5.23 Clean the Pumping Line Pipe Stop (MB-390149), (4 ea.) and the Cool Down Line Pipe Stop (MB-390150) (4 ea.) with Ethyl Alcohol (Fermi stock 1920-0550) and Kimwipes (Fermi stock 1660-2500) or equivalent.

Technician(s) Date 11-18-05

5.24 Weld the Pumping Line Pipe Stop (MB-390149), (4 ea.) and Cool Down Line Pipe Stop (MB-390150) (4 ea.) on the Pumping Line and Cool Down Lines.

Weldor(s) Date 11/18/05

5.25 Weld the fixed collar to the 4.5k Intercept Line Tube (MB-390204) per (ME-390208).

Weldor(s) Date 11/18/05

5.26 Install the Fiducial Mounting Blocks (MB-390809) per Q2 Cold Mass Welded Assembly (ME-390309).

Technician(s) Date 12-9-05

5.27 Weld the Fiducial Mounting Blocks (MB-390809) per Q2 Cold Mass Welded Assembly (ME-390309).

Weldor(s) _____ Date 12/9/05

5.28 Prepare Cold Mass Assembly for Pressure Test at 375 psi.

Technician(s) _____ Date 11-21-05

STOP

5.29 Verify Cold Mass Assembly is ready for Pressure Test at 375 psi.

Responsible Authority/Physicist _____ Date 11/21/05

5.30 Pressure test the Cold Mass Assembly at 375 psi Nitrogen per Section 5034 of the Fermilab ES&H Manual and UG-100 of the Code.

Warning:

The test is to be performed after normal working hours and only personnel directly involved with the test will be present.

STOP

Responsible Authority/Physicist _____ Date 11/21/05

5.31 Leak Check the Cold Mass Assembly. (This will include the Exchanger Outer Shell).

Part No. Cold mass assem.	DETERMINATION OF DETECTABLE LEAK						
	M.D.S. ÷ ((Response – Background) ÷ Leak value) = MDL						
OPERATOR'S LAST NAME	SCALE UNITS BEFORE HELIUM PROBE	SCALE UNITS WHILE ENCLOSURE FLOODING	MDS	Response	Background	Leak Value	MDL
Wilson	83X1	83X1	2	56X5	83X1	3.91 x E-8	3.96 x E-10

Inspector _____ Date 11/5/05

5.32 Leak check the ~~three~~ two Q2 4.5k Intercept Lines (MB-390204).

Q2 IP END VIEW

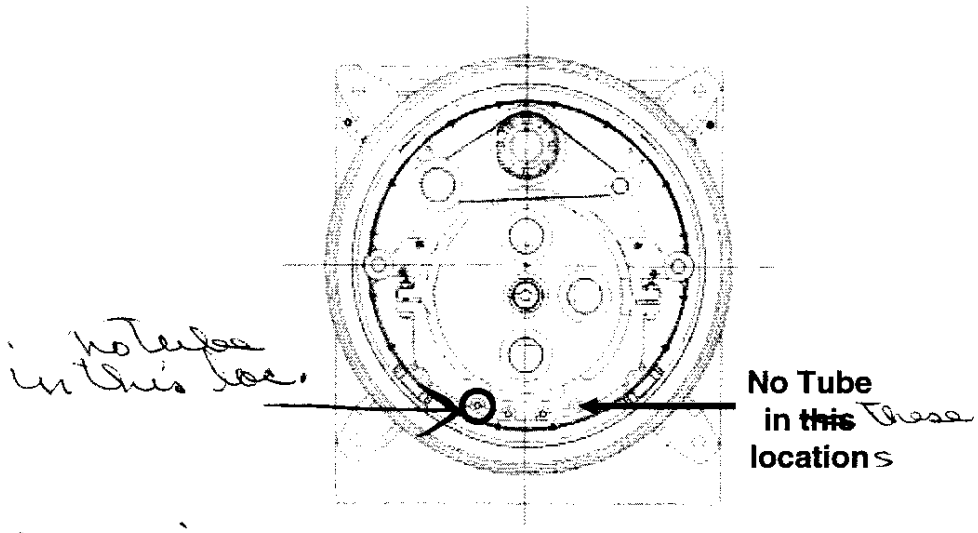

no tube in this loc.

4.5k Intercept Line - #1

Part No.	DETERMINATION OF DETECTABLE LEAK						
_____	M.D.S. ÷ ((Response – Background) ÷ Leak value) = MDL						
OPERATOR'S LAST NAME	SCALE UNITS BEFORE HELIUM PROBE	SCALE UNITS WHILE ENCLOSURE FLOODING	MDS	Response	Background	Leak Value	MDL
						_____ x E $^{-8}$	_____ x E $^{-}$ —

Q2 IP END VIEW

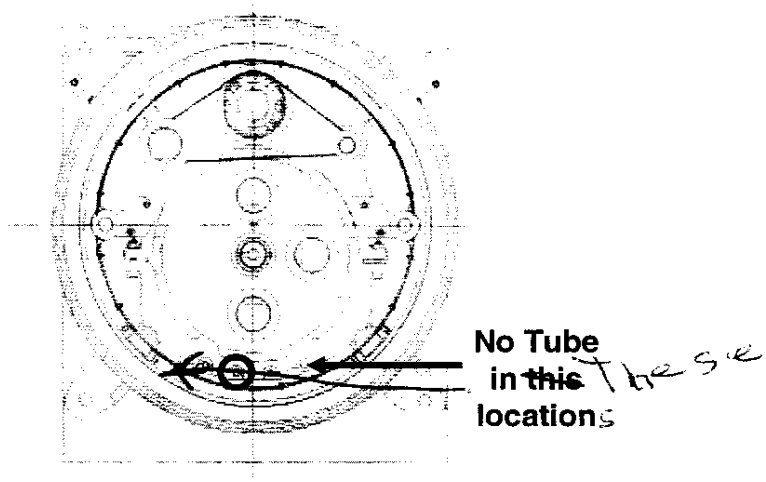

4.5k Intercept Line - #2

Part No. inter. line #2	DETERMINATION OF DETECTABLE LEAK						
	M.D.S. ÷ ((Response – Background) ÷ Leak value) = MDL						
OPERATOR'S LAST NAME	SCALE UNITS BEFORE HELIUM PROBE	SCALE UNITS WHILE ENCLOSURE FLOODING	MDS	Response	Background	Leak Value	MDL
Wilson	12X1	12X1	2	54X5	12X1	3.91 x E-8	3.63 x E-10

Q2 IP END VIEW

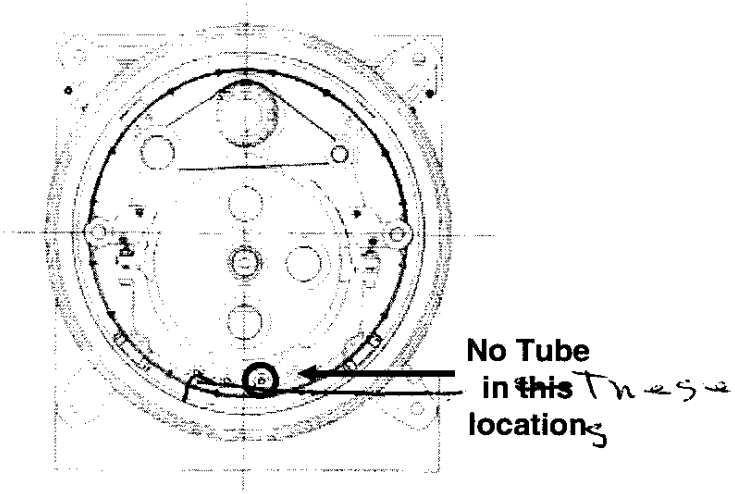

4.5k Intercept Line - #3

Part No. intercepts #3	DETERMINATION OF DETECTABLE LEAK						
	M.D.S. ÷ ((Response – Background) ÷ Leak value) = MDL						
OPERATOR'S LAST NAME	SCALE UNITS BEFORE HELIUM PROBE	SCALE UNITS WHILE ENCLOSURE FLOODING	MDS	Response	Background	Leak Value	MDL
Wilson	15 X1	15 X1	2	56 X 5	15 X1	$3.91 \times E^{-8}$	$2.95 \times E^{-10}$

Inspector

11-28-05
Date

5.33 Leak Check the Cooldown Line (MD-390146).

Q2 NON-IP END VIEW

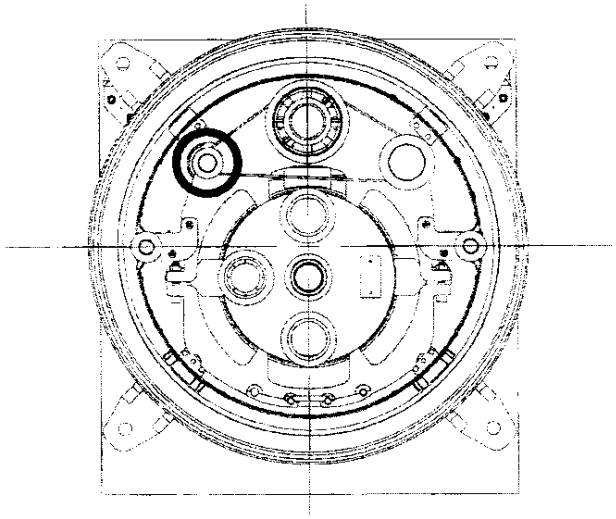

Cooldown Line (MD-390146)

Part No. Cooldown Line	DETERMINATION OF DETECTABLE LEAK						
	M.D.S. ÷ ((Response – Background) ÷ Leak value) = MDL						
OPERATOR'S LAST NAME	SCALE UNITS BEFORE HELIUM PROBE	SCALE UNITS WHILE ENCLOSURE FLOODING	MDS	Response	Background	Leak Value	MDL
Wilson	12X1	12X1	2	56X5	12X1	3.91 x E-8	2.97 x E-10

Technician(s)

11-28-05
Date

5.34 Leak Check the Q2 Pumping Line (MB-390147).

Q2 NON-IP END VIEW

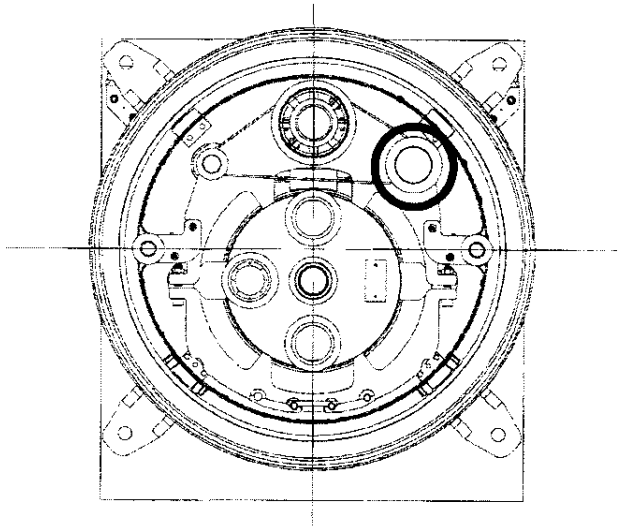

Pumping Line (MD-390147)

Part No. Pumping line	DETERMINATION OF DETECTABLE LEAK						
	M.D.S. ÷ ((Response – Background) ÷ Leak value) = MDL						
OPERATOR'S LAST NAME	SCALE UNITS BEFORE HELIUM PROBE	SCALE UNITS WHILE ENCLOSURE FLOODING	MDS	Response	Background	Leak Value	MDL
Wilson	26X1	26X1	2	56X5	26X1	3.91 x E-8	3.07 x E-10

Technician(s) 11/29/05 Date

6.0 Shield Assembly

6.1 Tap the PEM nuts prior to installing shield. Use care in tightening screws so they don't break.

Technician(s) _____ Date 12/7/05

6.2 Lift the Cold Mass Assembly and place the Center Section (ME-390164) and End Sections (ME-390162) on the Insertion Rails. Lower the Cold mass back onto the rails ensuring the holes in the Shield Sections line up with Support Rollers.

Technician(s) _____ Date 12/6/05

6.3 Insert the Mid Sections (ME-390163) and the Support Bands (MD-390083).

Technician(s) _____ Date 12/7/05

6.4 Assemble the bottom half of the shield. Leave all bolts loose. Spray all screw threads with Molybdenum.

Lower Shield Section
(ME-390082)

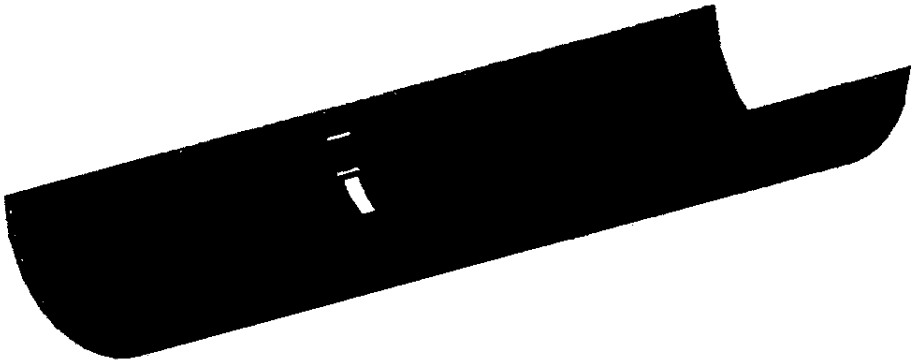

Technician(s) _____ Date 12/7/05

6.5 Assemble the Cooling Tubes (MD-390165) to the Bottom Half of the Shield.

Technician(s) _____ Date 12/6/05

6.6 Lift the Cold mass and place the Shield Inner and Outer MLI Blankets (ME-390313 & ME-390314) onto the insertion Rails in the correct orientation.

Note(s):

Place the Outer Blanket (ME-390314) on the Rails first.

Technician(s) _____ Date 12/7/05

6.7 Lower the Cold mass onto the rails. Ensure the slits in the blankets line up with Support Rollers.

Technician(s) _____ Date 12/7/05

6.8 Install the Cold Mass MLI Blankets per (ME-390302) and in the same position as Step 5.6. The center blanket may need to be rotated 90°. Tape the seams instead of using the Velcro, if necessary.

Technician(s) _____ Date 12/7/05

6.9 Cut and install the pipe MLI blankets per Q2 Piping Insulation (ME-390306).

Technician(s) _____ Date 12/7/05

6.10 Install the Upper Shield per Q2 Thermal Shield Assembly (ME-390161). Spray all screw threads with Molybdenum.

Technician(s) _____ Date 12/7/05

6.11 Install the Shield Blankets (ME-390313 & ME-390314). Cutouts will have to be made for the Upper Support Lugs.

Technician(s) _____ Date 12/7/05

7.0 Cold Mass Insertion into the Vacuum Vessel

7.1 Install Pig Putty between the Vacuum Vessel and the Insertion Rails.

Technician(s) _____ Date _____

7.2 Install the Cold Mass Pull-in Tooling.

Technician(s) _____ Date 12-8-05

7.3 Mount the Pneumatic Winch to floor on the West side of the Vacuum Vessel.

Technician(s) _____ Date 12-8-8

7.4 Connect the cable to the Pull-in Tooling.

Technician(s) _____ Date 12-8-05

DR# 4311

7.5 Pull the Cold mass Assembly into the Vacuum Vessel.

Technician(s) _____ Date 12-8-05

7.6 When the Cold Mass is fully inserted, install the Suspension System Adjusting Screws (MB-390039).

Note(s):

Ensure proper lubrication on adjusting screws. Check threads on screw and vacuum vessel prior to assembly and fix if necessary.

STEP 7.6 COMPLETED IN PROGRESS
7.6.7.8 MARKED REV

Technician(s) _____ Date _____

7.7 Clean the following parts fromQ2 Heat Exchanger Corrugated Tube Assembly (ME-390143).

Part Name	Part Number	Quantity	Completed
Corrugated Tube Weldment	**(ME-390394)**	**1**	✓
Corrugated Tube Support	**(MB-390028)**	**8**	✓
Corrugated Tube Restrictor	**(ME-390029)**	**2**	✓

Technician(s) _____ Date 12/8/05

7.8 Assemble Corrugated Tube Supports (MB-390028) and Restrictors (MB-390029) to the Heat Exchanger Corrugated Tube per (ME-390143).

Technician(s) _____ Date _____

7.9 Slide the Corrugated Tube Assembly (ME-390143) into the Heat Exchanger Outer Shell per (ME-390142).

Technician(s) _____ Date 11-22-05

7.10 Adjust the Suspension System Adjusting Screw (MB-390039) as needed to center the Cold Mass in the Vacuum Vessel.

Technician(s) _____ Date 12/8/05

7.11 At the **Q2a** end, measure and mark 1m 411.8 mm [55.58 in.] of the lead as per Q2 Module Assembly Q2a Lead End (ME-369895, sheet 3 of 4). Have Crew Chief verify the length and sign below.

Technician(s) _____ Date _____

Crew Chief _____ Date 12/9/05

7.12 At the **Q2a** end, measure 1m 411.8 mm [55.58 in.] and cut the lead at the mark as per Q2 Module Assembly Q2a Lead End (ME-369895, sheet 3 of 4). Have a Weldor fuse the ends of the Superconducting Cable before shipping Magnet.

Technician(s) _____ Date 12/09/05

Weldor(s) _____ Date 12/9/05

7.13 At the **Q2b** end, measure and mark 511.8 mm [20.15 in.] of the lead as per Q2 Module Assembly Q2b Lead End Details (ME-369895, sheet 2 of 4).
Have Crew Chief verify the length and sign below.

Technician(s) _____ Date 12/9/05

STOP

Crew Chief _____ Date 12/09/05

7.14 At the **Q2b** end, measure 511.8 mm [20.15 in.] and cut the lead at the mark as per Q2 Module Assembly Q2b Lead End Details (ME-369895, sheet 2 of 4). Have a Weldor fuse the ends of the Superconducting Cable before shipping Magnet.

Technician(s) _____ Date 12/09/05

* Weldor(s) _____ Date 12/9/05

8.0 Electrical Inspection

Perform an electrical inspection on each of the Individual Quadrants and the Cold Masses. Refer to the Valhalla and Leader Free Standing Coil Measurement Procedure (ES-292306).

To measure the resistance of a bussed Q2:

1. Use Valhalla Scientific 4300B digital micro-ohmmeter.
2. Set Test Current to 1 amp.
3. Set Scale to 2V full scale.
4. Turn temperature compensation on.
5. Turn test current off.
6. Put jumper between Q2a Q3 inner power lead and 5 KA bus as shown in figure.
7. Connect I_{HI} to the 5KA bus (Q2a Q3 inner power lead) as shown in figure.
8. Connect I_{LO} to the Q2b Q3 inner power lead as shown in figure.
9. Turn test current on.
10. Connect V_{HI} and V_{LO} buttons to voltage taps as shown below.
11. Read resistance and record in traveler.

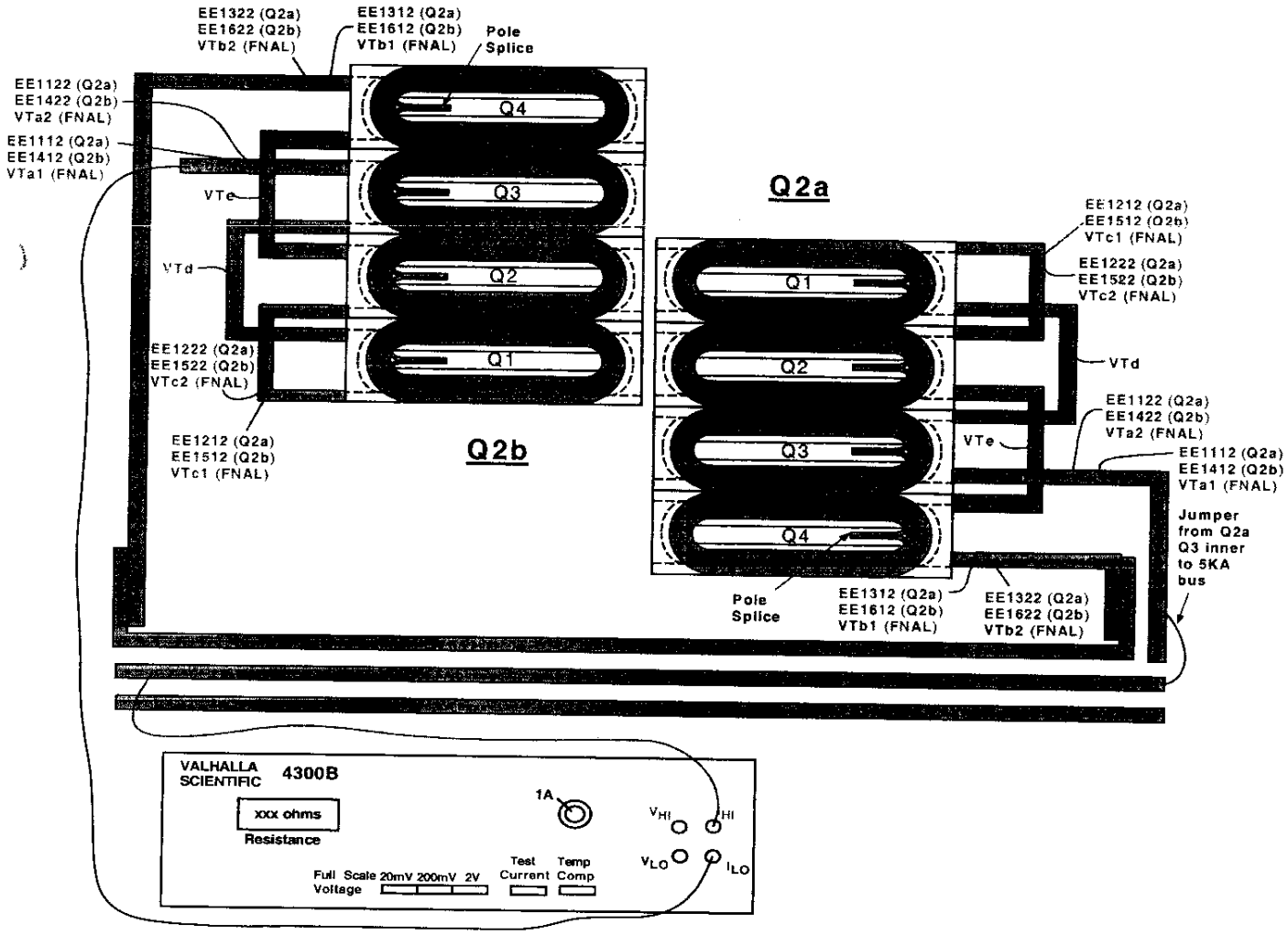

8.1 Measure the Resistance of the Q2a Cold Mass.

(Q2a) Resistance				Nominal ~ 560 to 585 mΩ Quadrant Total Resistance
Connect	Fermi	CERN	Quadrant	
V_{HI}	VTdQ2a	EMPTY	Quadrant 1	573.6 mΩ
V_{LO}	VTc1Q2a	EE1212		
V_{HI}	VTc1Q2a	EE1212	Quadrant 2	572.3 mΩ
V_{LO}	VTeQ2a	EMPTY		
V_{HI}	VTa1Q2a	EE1112	Quadrant 3	573.7 mΩ
V_{LO}	VTdQ2a	EMPTY		
V_{HI}	VTeQ2a	EMPTY	Quadrant 4	573.5 mΩ
V_{LO}	VTb1Q2a	EE1312		

Note: When Measuring Total Cold Mass, Set Test Current to 0.1 Amp				
V_{HI}	VTa1Q2a	EE1112	Total Cold Mass	Nominal ~ 2.305 Ω
V_{LO}	VTb1Q2a	EE1312		2.294 Ω

Technician(s) 12-9-05 Date

8.2 Measure the resistance of Redundant Voltage Taps.

Q2a Redundant Voltage Taps			
Connect	Fermi	CERN	Resistance
V_{HI}	VTa2Q2a	EE1122	1148 Ω
V_{LO}	VTc2Q2a	EE1222	
V_{HI}	VTc2Q2a	EE1222	1147 Ω
V_{LO}	VTb2Q2a	EE1322	

Technician(s) 12-9-05 Date

To measure Ls and Q of a Bussed Q2a:

1. Use Agilent 4263B LCR Meter.
2. Turn power on by pushing Line button. Wait 30 seconds until display screen is lit.
3. Recall program #1. To do this, push recall (Rcl), then push the #1, then push Enter.
4. Push Auto/Hold button to release hold.
5. Verify that the frequency displayed in the upper right corner of the display screen is 1000 Hz and the level recorded in the lower right corner of the display screen is 1V or 1000 mV.
6. Connect jumper between Q2a/Quadrant 3 inner power lead and 5KA bus as shown in figure.
7. Connect H_{cur} to Q2b/Quadrant 3 inner power lead as shown in figure.
8. Connect L_{cur} to 5KA bus as shown in figure.
9. Connect H_{pot} and L_{pot} buttons to voltage taps as shown below.

To measure Q2a:

- To measure Q1, connect H_{pot} to VTc1 (EE1212 for Q2a), and L_{pot} to VTd.
- To measure Q2, connect H_{pot} to VTe, and L_{pot} to VTc1 (EE1212 for Q2a).
- To measure Q3, connect H_{pot} to VTd and L_{pot} to VTa1 (EE1112 for Q2a).
- To measure Q4, connect H_{pot} to VTb1 (EE1312 for Q2a), and L_{pot} to VTe.
- To measure total, connect H_{pot} to VTb1 (EE1312 for Q2a), and L_{pot} to VTa1 (EE1112 for Q2a).

10. Read Ls and Q from display and record in traveler.

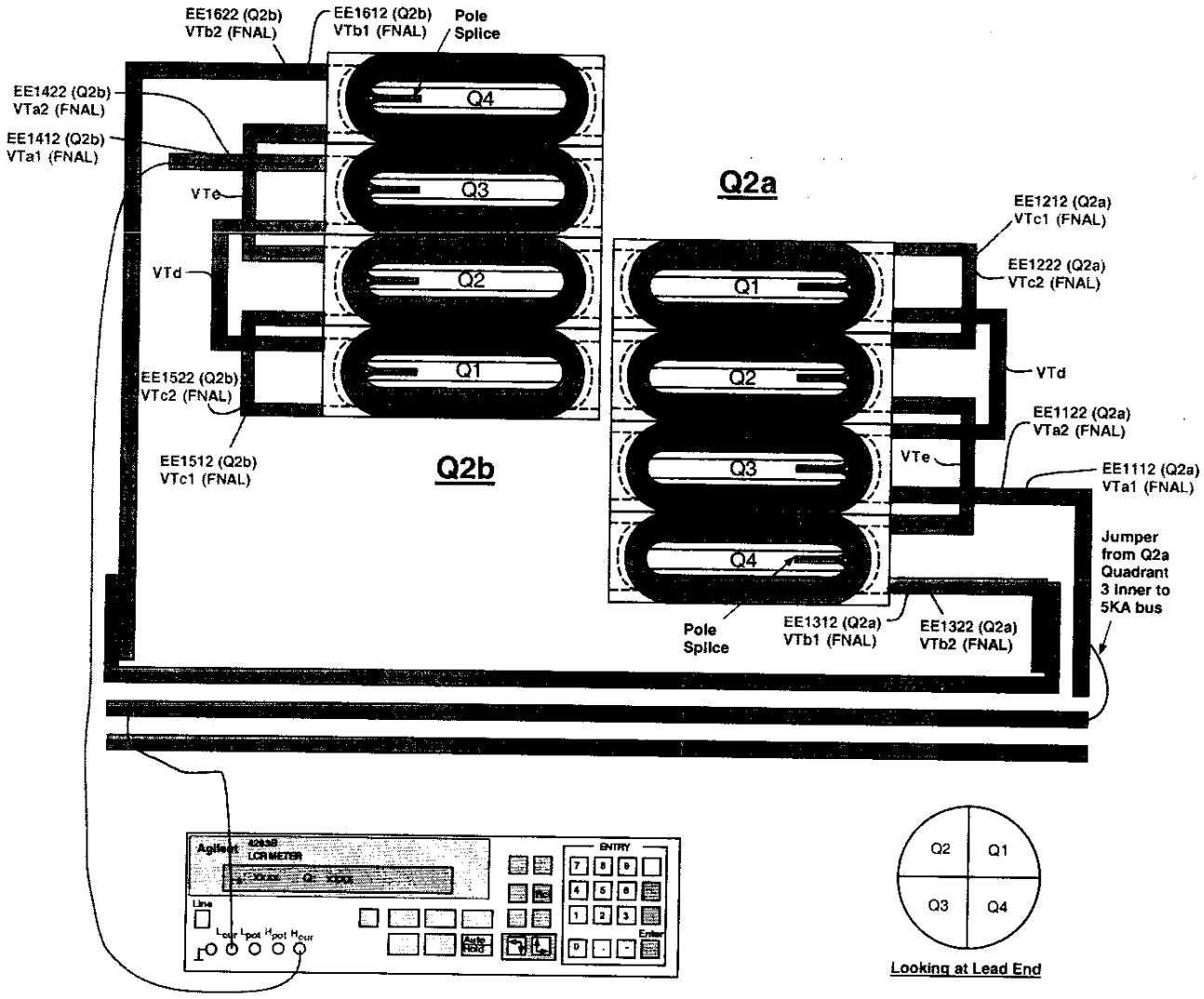

8.3 Measure the Inductance (Ls) of the Q2a Cold Mass.

(Q2a) Inductance				Nominal ~ 3.34 to 3.48 mH Quadrant Total Inductance
Connect	Fermi	CERN	Quadrant	
H_{POT}	VTc1Q2a	EE1212	Quadrant 1	3.442 mH
L_{POT}	VTdQ2a	EMPTY		
H_{POT}	VTeQ2a	EMPTY	Quadrant 2	3.452 mH
L_{POT}	VTc1Q2a	EE1212		
H_{POT}	VTa1Q2a	EE1112	Quadrant 3	3.412 mH
L_{POT}	VTdQ2a	EMPTY		
H_{POT}	VTb1Q2a	EE1312	Quadrant 4	3.420 mH
L_{POT}	VTeQ2a	EMPTY		

H_{POT}	VTb1Q2a	EE1312	Total Cold Mass	Nominal ~ 13.28 to 13.78 mH
L_{POT}	VTa1Q2a	EE1112		13.721 mH

D [illegible] 12-9-05
Technician(s) Date

8.4 Measure the Q-Factor (Q) of the Q2a Cold Mass.

(Q2a) Q-Factor				Nominal ~ 3.7 to 4.0 Quadrant Total Q
Connect	Fermi	CERN	Quadrant	
H_{POT}	VTc1Q2a	EE1212	Quadrant 1	3.8
L_{POT}	VTdQ2a	EMPTY		
H_{POT}	VTeQ2a	EMPTY	Quadrant 2	3.9
L_{POT}	VTc1Q2a	EE1212		
H_{POT}	VTdQ2a	EMPTY	Quadrant 3	4.0
L_{POT}	VTa1Q2a	EE1112		
H_{POT}	VTb1Q2a	EE1312	Quadrant 4	3.9
L_{POT}	VTeQ2a	EMPTY		

H_{POT}	VTb1Q2a	EE1312	Total Cold Mass	Nominal ~ 3.7 to 4.0
L_{POT}	VTa1Q2a	EE1112		3.9

D [illegible] 12-9-05
Technician(s) Date

To measure the resistance of a bussed Q2:

1. Use Valhalla Scientific 4300B digital micro-ohmmeter.
2. Set Test Current to 1 amp.
3. Set Scale to 2V full scale.
4. Turn temperature compensation on.
5. Turn test current off.
6. Put jumper between Q2a Q3 inner power lead and 5 KA bus as shown in figure.
7. Connect I_{HI} to the 5KA bus (Q2a Q3 inner power lead) as shown in figure.
8. Connect I_{LO} to the Q2b Q3 inner power lead as shown in figure.
9. Turn test current on.
10. Connect V_{HI} and V_{LO} buttons to voltage taps as shown below.
11. Read resistance and record in traveler.

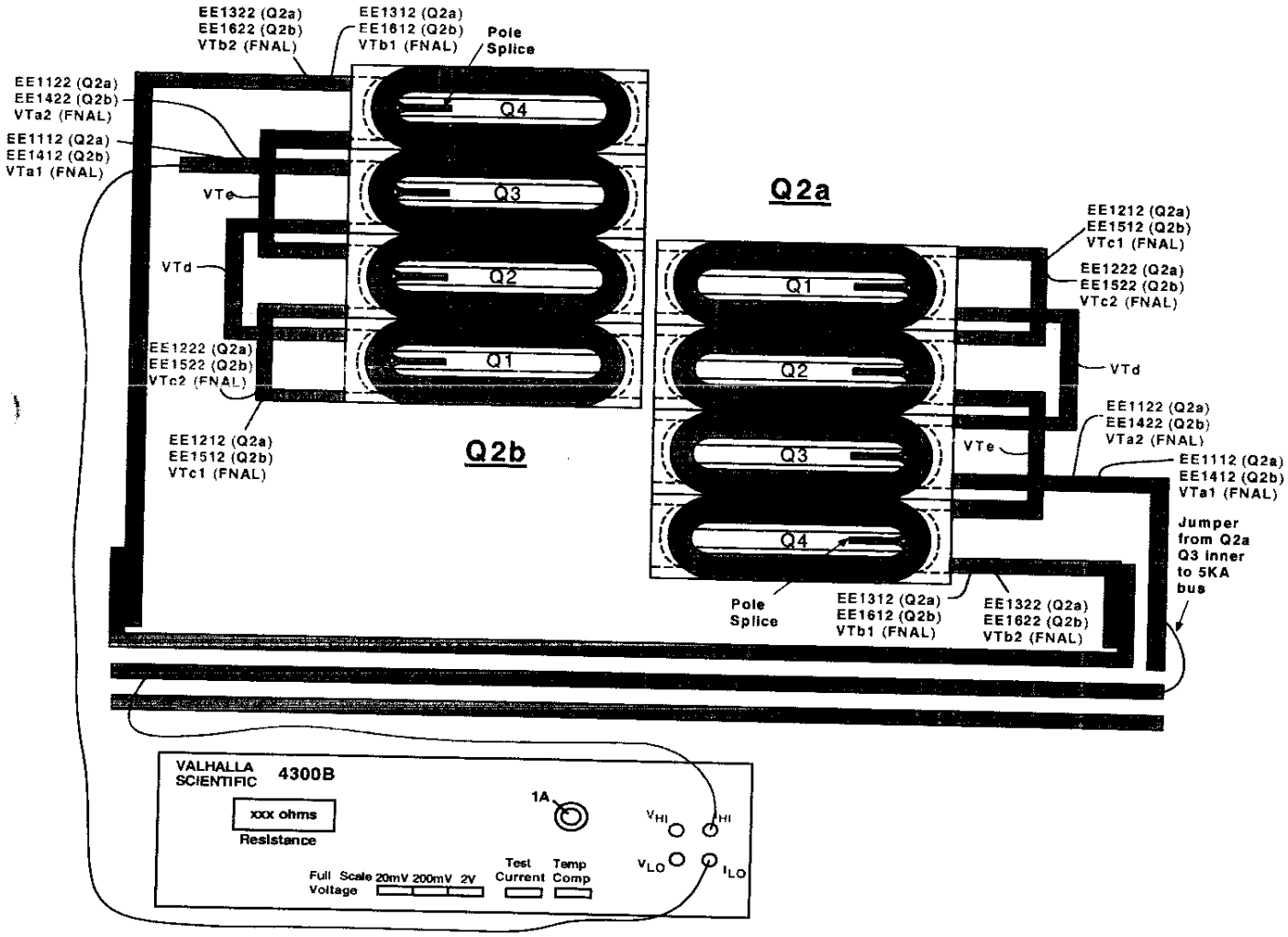

8.5 Measure the Resistance of the Q2b Cold Mass.

(Q2b) Resistance				Nominal ~ 560 to 585 mΩ
				Quadrant Total Resistance
Connect	Fermi	CERN	Quadrant	
V_{HI}	VTc1Q2b	EE1512	Quadrant 1	572.3 mΩ
V_{LO}	VTdQ2b	EMPTY		
V_{HI}	VTeQ2b	EMPTY	Quadrant 2	572.2 mΩ
V_{LO}	VTc1Q2b	EE1512		
V_{HI}	VTdQ2b	EMPTY	Quadrant 3	572.2 mΩ
V_{LO}	VTa1Q2b	EE1412		
V_{HI}	VTb1Q2b	EE1612	Quadrant 4	572.8 mΩ
V_{LO}	VTeQ2b	EMPTY		

Note: When Measuring Total Cold Mass, Set Test Current to 0.1 Amp				
V_{HI}	VTb1Q2b	EE1612	Total Cold Mass	Nominal ~ 2.305Ω
V_{LO}	VTa1Q2b	EE1412		2.291 Ω

Technician(s) 12-9-05 Date

8.6 Measure the resistance of Redundant Voltage Taps.

Q2b Redundant Voltage Taps			
Connect	Fermi	CERN	Resistance
V_{HI}	VTc2Q2b	EE1522	1146 Ω
V_{LO}	VTa2Q2b	EE1422	
V_{HI}	VTb2Q2b	EE1622	1145 Ω
V_{LO}	VTc2Q2b	EE1522	

Technician(s) 12-9-05 Date

To measure Ls and Q of a Bussed Q2b:

1. Use Agilent 4263B LCR Meter.
2. Turn power on by pushing line button. Wait 30 seconds until display screen is lit.
3. Recall program #1. To do this, push recall (Rcl), then push #1, then push Enter.
4. Push Auto/Hold button to release hold.
5. Verify that the frequency displayed in the upper right corner of the display screen is 1000 Hz and the level recorded in the lower right corner of the display screen is 1V or 1000 mV.
6. Connect jumper between Q2a/Quadrant 3 inner power lead and 5KA bus as shown in figure.
7. Connect H_{cur} to 5KA bus as shown in figure.
8. Connect L_{cur} to Q2b/Quadrant 3 inner power lead as shown in figure.
9. Connect H_{pot} and L_{pot} buttons to voltage taps as shown below.

To measure Q2b:

- To measure Q1, connect H_{pot} to VTc1 (EE1512 for Q2b), and L_{pot} to VTd.
- To measure Q2, connect H_{pot} to VTe and L_{pot} to VTc1 (EE1512 for Q2b).
- To measure Q3, connect H_{pot} to VTd and L_{pot} to VTa1 (EE1412 for Q2b).
- To measure Q4, connect H_{pot} to VTb1 (EE1612 for Q2b) and L_{pot} to VTe.
- To measure total, connect H_{pot} to VTb1 (EE1612 for Q2b) and L_{pot} to VTa1 (EE1412 for Q2b).

10. Read Ls and Q from display and record in traveler.

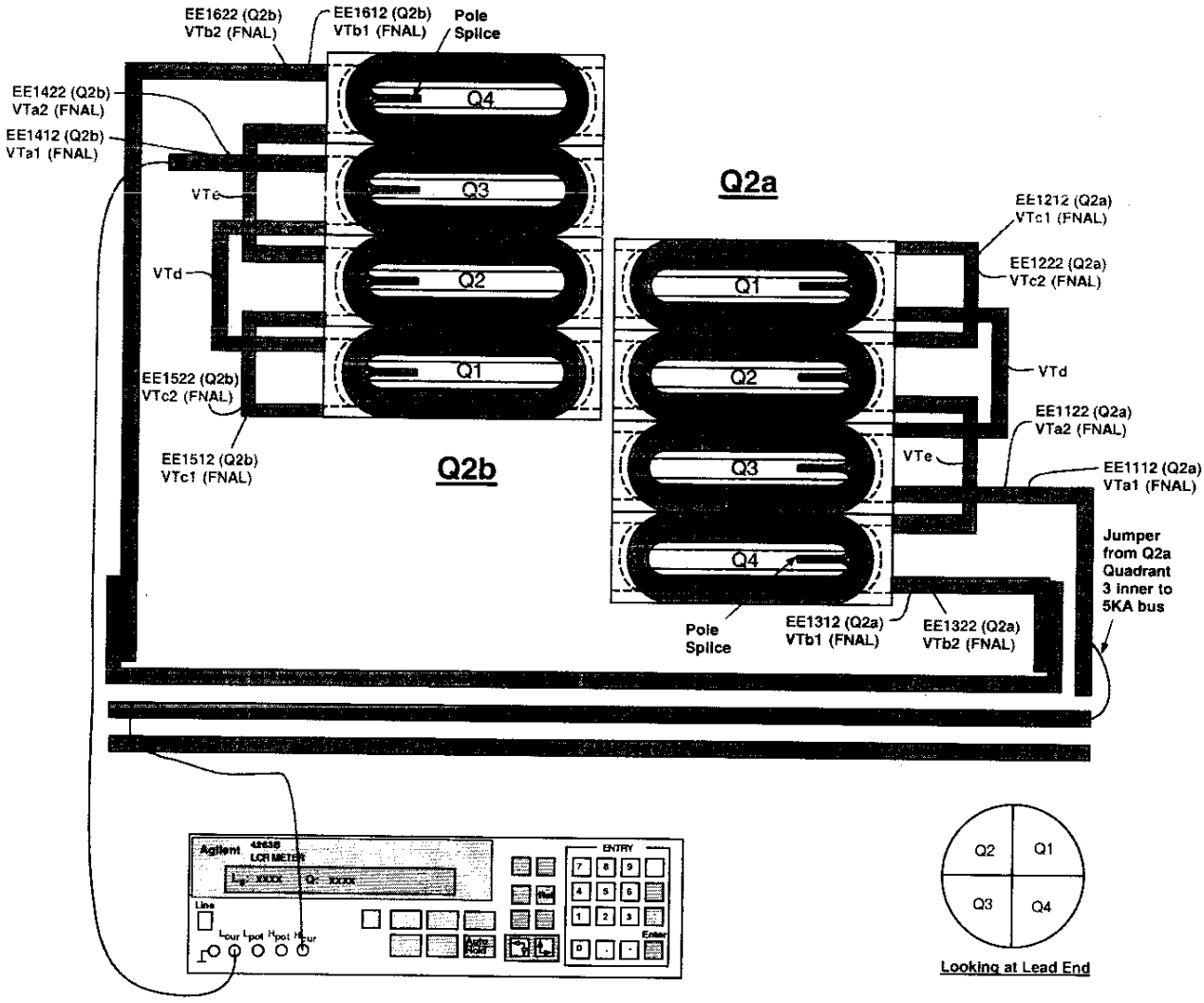

8.7 Measure the Inductance (Ls) of the Q2b Cold Mass.

(Q2b) Inductance				Nominal ~ 3.34 to 3.48 mH Quadrant Total Inductance
Connect	Fermi	CERN	Quadrant	
H_{POT}	VTc1Q2b	EE1512	Quadrant 1	3.420 mH
L_{POT}	VTdQ2b	EMPTY		
H_{POT}	VTeQ2b	EMPTY	Quadrant 2	3.420 mH
L_{POT}	VTc1Q2b	EE1512		
H_{POT}	VTdQ2b	EMPTY	Quadrant 3	3.346 mH
L_{POT}	VTa1Q2b	EE1412		
H_{POT}	VTb1Q2b	EE1612	Quadrant 4	3.387 mH
L_{POT}	VTeQ2b	EMPTY		

H_{POT}	VTb1Q2b	EE1612	Total Cold Mass	Nominal ~ 13.28 to 13.78 mH
L_{POT}	VTa1Q2b	EE1412		13.573 mH

Technician(s) _____ Date 12/9/05

8.8 Measure the Q-Factor (Q) of the Q2b Cold Mass.

(Q2b) Q-Factor				Nominal ~ 3.7 to 4.0 Quadrant Total Q
Connect	Fermi	CERN	Quadrant	
H_{POT}	VTc1Q2b	EE1512	Quadrant 1	3.8
L_{POT}	VTdQ2b	EMPTY		
H_{POT}	VTeQ2b	EMPTY	Quadrant 2	3.9
L_{POT}	VTc1Q2b	EE1512		
H_{POT}	VTdQ2b	EMPTY	Quadrant 3	3.9
L_{POT}	VTa1Q2b	EE1412		
H_{POT}	VTb1Q2b	EE1612	Quadrant 4	3.8
L_{POT}	VTeQ2b	EMPTY		

H_{POT}	VTb1Q2b	EE1612	Total Cold Mass	Nominal ~ 3.7 to 4.0
L_{POT}	VTa1Q2b	EE1412		3.9

Technician(s) _____ Date 12-9-05

To measure the resistance of a Thermometer (RTD):

1. Use Hewlett Packard HP3457A digital multimeter.
2. Record temperature of building within +/- 5 degrees.
3. Press line button to turn line on.
4. Connect wires as shown in Figure below.
   U+ (Black) to Sense HI
   I+ (Yellow) to Input HI
   U- (Red) to Sense LO
   I- (Green) to Input LO
5. Push blue button (function key) once.
6. Push OHMF button.
7. Verify arrow in readout is above the 4WΩ (meaning a 4 wire resistance measurement).
8. Read resistance in ohms and record in traveler.

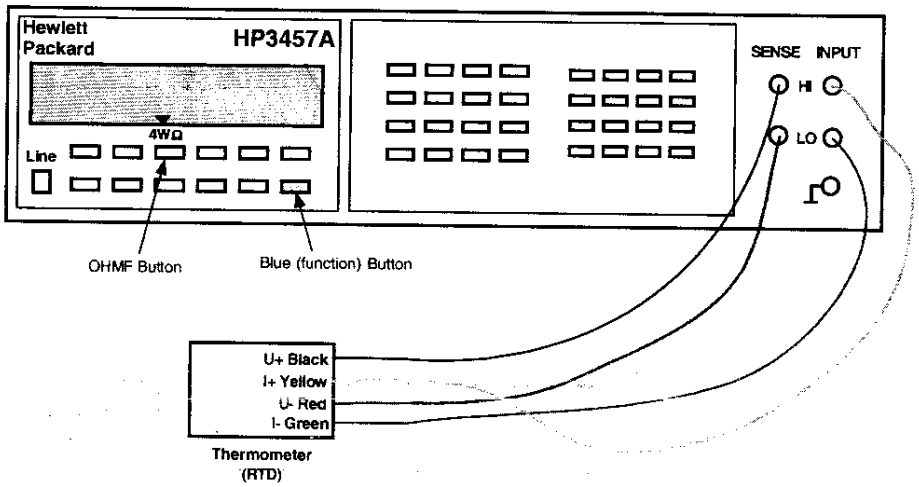

To measure the resistance of a Cryogenic (Warm-up) Heater

1. Use Hewlett Packard HP3457A digital multimeter.
2. Record temperature of building within +/- 5 degrees.
3. Press line button to turn line on.
4. Connect wires as shown in Figure below.
5. Push blue button (function key) once.
6. Push OHMF button.
7. Verify arrow in readout is above the 4WΩ (meaning a 4 wire resistance measurement).
   Note: Although this is technically a 4 wire measurement, it is effectively a 2 wire measurement, since there are only 2 wires connected to each heater.
8. Read resistance in ohms and record in traveler.

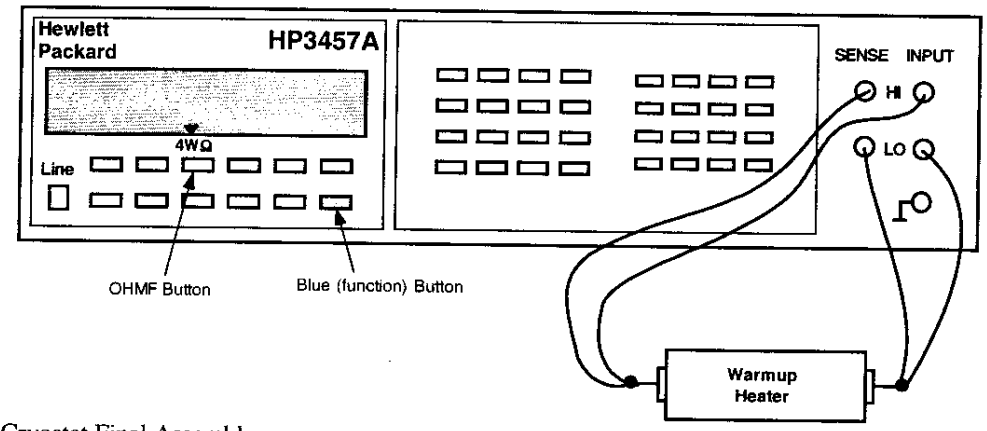

8.9 Measure the resistance of the Q2a RTD's and Cryogenic (Warm-up) Heaters. Record MFR Resistance (Expedition) for RTD's.

Q2a - RTD's and Cryogenic (warm-up) Heaters					
Temperature of Building (+/- 5°): 70°F					
Component	**Fermi**	**CERN**	**Resistance**	**Range**	**Mfr. Resistance (Expedition)**
Q2a RTD, primary	TaQ2a	TT8312	66.174 Ω	60 to 70 Ω	63.615 Ω
Q2a RTD, redundant	TbQ2a	TT8322	66.354 Ω	60 to 70 Ω	63.319 Ω
Q2A Cryogenic (warm-up) Heater (LE) - wire toward cold mass end plate (CERN #1 I+)	W1aQ2A	EH8312+	18.012 Ω		
Q2A Cryogenic (warm-up) Heater (LE) - wire toward cold mass mag center (CERN #1 I-)	W2aQ2A	EH8312-			
Q2A Cryogenic (warm-up) Heater (Non-LE) - wire toward cold mass end plate (CERN #2 I+)	W1bQ2A	EH8322+	17.992 Ω		
Q2A Cryogenic (warm-up) Heater (Non-LE) - wire toward cold mass mag center (CERN #2 I-)	W2bQ2A	EH8322-			

Technician(s) _____ Date _____

8.10 Measure the resistance of the Q2b RTD's and Cryogenic (Warm-up) Heaters. Record MFR Resistance (Expedition) for RTD's.

Q2b - RTD's and Cryogenic (warm-up) Heaters					
Temperature of Building (+/- 5°): 64° F					
Component	**Fermi**	**CERN**	**Resistance**	**Range**	**Mfr. Resistance (Expedition)**
Q2b RTD, primary	TaQ2b	TT8332	65.240 Ω	60 to 70 Ω	62.595 Ω
Q2b RTD, redundant	TbQ2b	TT8342	71.020 Ω	60 to 70 Ω	68.531 Ω
Q2B Cryogenic (warm-up) Heater (LE) - wire toward cold mass end plate (CERN #1 I+)	W1aQ2B	EH8332+	17.418 Ω		
Q2B Cryogenic (warm-up) Heater (LE) - wire toward cold mass mag center (CERN #1 I-)	W2aQ2B	EH8332-			
Q2B Cryogenic (warm-up) Heater (Non-LE) - wire toward cold mass end plate (CERN #2 I+)	W1bQ2B	EH8342+	17.093 Ω		
Q2B Cryogenic (warm-up) Heater (Non-LE) - wire toward cold mass mag center (CERN #2 I-)	W2bQ2B	EH8342-			

C. Fuc[illegible]
Technician(s)

12/8/05
Date

8.11 Using the Hewlett Packard HP3457A digital multimeter, measure the Strip Heater Resistance for Q2a.

Q2a Strip Heater Resistance				
Fermi	CERN	Description	Limit	Resistance
H1aQ2a	YT1112+	Circuit A	18.20 to 21 Ω	19.951 Ω
H2aQ2a	YT1112-			
H1bQ2a	YT1122+	Circuit B	18.20 to 21 Ω	19.975 Ω
H2bQ2a	YT1122-			

Technician(s) _____ Date 12/10/05

8.12 Using the Hewlett Packard HP3457A digital multimeter, measure the Strip Heater Resistance for Q2b.

Q2b Strip Heater Resistance				
Fermi	CERN	Description	Limit	Resistance
H1aQ2b	YT1132+	Circuit A	18.20 to 21 Ω	19.215 Ω
H2aQ2b	YT1132-			
H1bQ2b	YT1142+	Circuit B	18.20 to 21 Ω	19.151 Ω
H2bQ2b	YT1142-			

Technician(s) _____ Date 12/10/05

8.13 Using the HP3457A, connect power thru the connector Power Leads (H2A and H2B to measure Q2-H2 or V2A and V2B to measure Q2-V2). Connect the Sense Leads as shown in table below and record resistance.

Corrector Bus Leads

	V2A	V2B	H2A	H2B
	V1A	V1B	H1A	H1B

(View Looking into Q2b)

Readout Labels		Power Labels	Resistance	Nominal resistance
V2A	EE8112	V2A, V2B	.0372 Ω	< 5 Ω
EE8112	V2B		17.167 Ω	> 14 Ω
V2A	V2B		17.163 Ω	18-20 Ω
H2A	EE8122	H2A, H2B	.0256 Ω	< 5 Ω
EE8122	H2B		21.101 Ω	> 14 Ω
H2A	H2B		21.122 Ω	21.5-23.5 Ω

C. Fran
Technician(s)

12/10/05
Date

8.14 Check Q1 Instrumentation Bus Wires for Continuity.

Module	Pin	Fermi	CERN	KEK	Description	Done
M2	1	VTa1Q1	EE1111	a1	Q1 Lead Voltage Tap "a", primary	✓
M2	2	VTa2Q1	EE1121	a2	Q1 Lead Voltage Tap "a", redundant	✓
M2	3	VTc1Q1	EE1211	c1	Q1 Center Voltage Tap "c", primary	✓
M2	4	VTc2Q1	EE1221	c2	Q1 Center Voltage Tap "c", redundant	✓
M2	5	VTb1Q1	EE1311	b1	Q1 Lead Voltage Tap "b", primary	✓
M3	5	VTb2Q1	EE1321	b2	Q1 Lead Voltage Tap "b", redundant	✓
M5	1	VTH1	EE8121		Corrector voltage tap Q1-H1 (skew dipole) (on MCBX, MCBXH, A+ lead)	✓
M5	2	VTV1	EE8111		Corrector voltage tap Q1-V1 (normal dipole) (on MCBX, MCBXV A+ lead)	✓
M7	1	W1aQ1	EH8311+		Q1 Cryogenic Heater lead end - wire at top (CERN #1 I+)	✓
M7	2	W2aQ1	EH8311-		Q1 Cryogenic Heater lead end - wire at bottom (CERN #1 I-)	✓
M7	3	W1bQ1	EH8321+		Q1 Cryogenic Heater non-lead end - wire at top (CERN #2 I+)	✓
M7	4	W2bQ1	EH8321-		Q1 Cryogenic Heater non-lead end - wire at bottom (CERN #2 I-)	✓
M9	1	H1aQ1	YT1111+	HA1	Q1 Protection (Strip) Heater, ("a" circuit) (CERN lead #1+)	✓
M9	3	H2aQ1	YT1111-	HA2	Q1Protection (Strip) Heater, ("a" circuit) (CERN lead #1-)	✓
M9	5	H1bQ1	YT1121+	HB1	Q1 Protection (Strip) Heater, ("b" circuit) (CERN lead #2+)	✓
M10	4	H2bQ1	YT1121-	HB2	Q1 Protection (Strip) Heater, ("b" circuit) (CERN lead #2-)	✓
M12	1	TaQ1_I+	TT8311 I+		Q1 RTD, primary Wire color: Yellow	✓
M12	2	TaQ1_I-	TT8311 I-		Q1 RTD, primary Wire color: Green	✓
M12	3	TaQ1_V+	TT8311 U+		Q1 RTD, primary Wire color: Black	✓
M12	4	TaQ1_V-	TT8311 U-		Q1 RTD, primary Wire color: Red	✓
M12	5	TbQ1_I+	TT8321 I+		Q1 RTD, primary Wire color: Yellow	✓
M12	6	TbQ1_I-	TT8321 I-		Q1 RTD, primary Wire color: Green	✓
M12	11	TbQ1_V+	TT8321 U+		Q1 RTD, primary Wire color: Black	✓
M12	10	TbQ1_V-	TT8321 U-		Q1 RTD, primary Wire color: Red	✓

Technician(s) _____ Date 12/12/05

9.0 Final Preparations

9.1 Install Target Holders (Right, MD-390539), (Left, MD-390540) and (MD-390211) as per Q2 Cryostat General Assembly (ME-390206).

STRIK

Technician(s) _____ Date 11/10/05

9.2 Install Reference Socket Cup (MA-390426) as per Q2 Cryostat General Assembly (ME-390206).

STRIK

Technician(s) _____ Date 11/10/05

HIPOT STRIP HEATERS TO EVERYTHING @ 5KV

815nA _____ TECH _____ DATE 12/12/05

HIPOT COILS TO EVERYTHING @ 5KV

2.3nA _____ TECH _____ DATE 12/12/05

9.3 Drill Holes for Spring Pins (MA-393360) in each of the three types of Target Holders (Right, MD-390539, Left, MD-390540, & MD-390211). Ensure that the holes are centered in a straight line as well as equidistant between the two corresponding bolt holes.

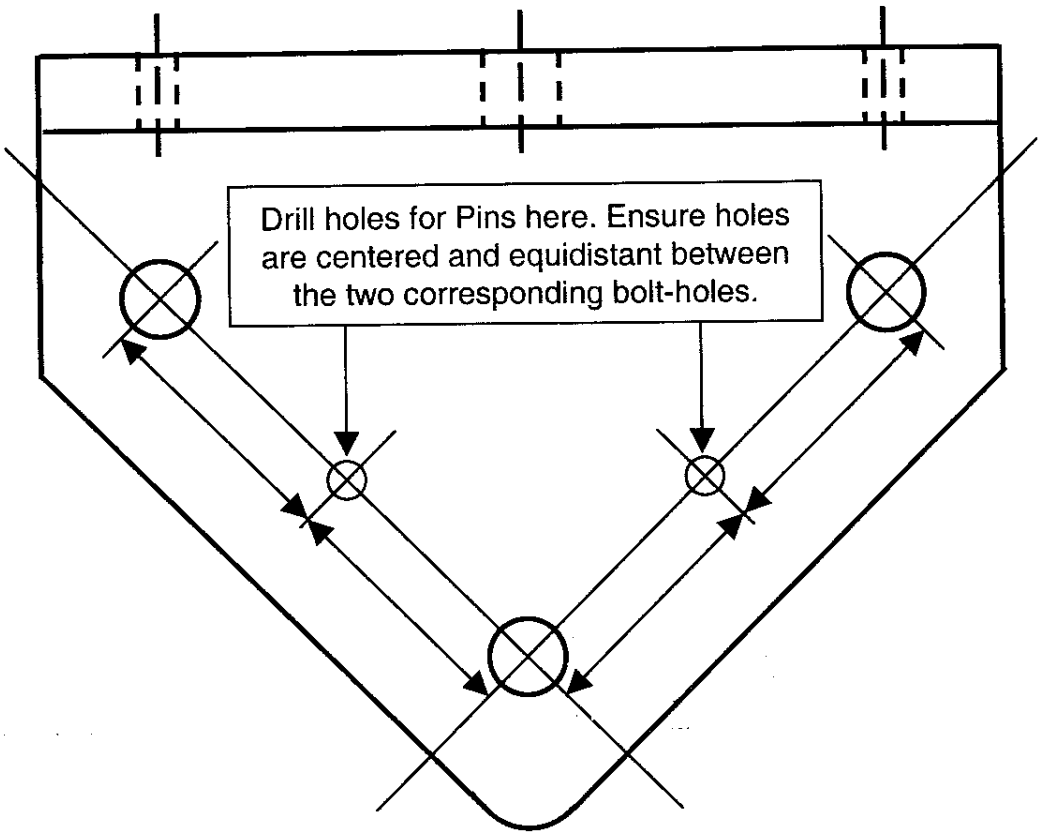

Target Holder

(Right and Left Target Holder will differ in appearance from the above, but holes will be made the same way.)

STEVE

Technician(s) _____ Date 11/10/05

9.4 Install the Vinyl Flange Covers (MA-390491), (MA-390492), (MA-390493), (MA-390494), & the Alignment Fiducial Covers (MA-390495).

Technician(s) _____ Date 11/10/05

9.5 Ensure all Pipe Supports are in place.

Technician(s) _____ Date 12·10·05

STOP

9.6 Perform a Final Stretched Wire measurement.

JOE 10 2004

Responsible Authority/Physicist _____ Date 2/5/06

STOP

9.7 Perform a Final Cryostat Pipe Survey measurement.

TED 2 2004

Responsible Authority/Physicist _____ Date 2/6/06

10.0 Production Complete

10.1 Process Engineering: verify that the LHC Cryostat Assembly Traveler (5520-TR-333644) is accurate and complete. This shall include a review of all steps to ensure that all operations have been completed and signed off. Ensure that all Discrepancy Reports, Nonconformance Reports, Repair/Rework Forms, Deviation Index and dispositions have been reviewed by the Responsible Authority for conformance before being approved.

Comments:

Process Engineering/Designee

6/26/06
Date

TD - Engineering Fabri _ion Component Kit List

ORIGIN

Process Engineering

Component Serial No. LQXB10 (Rebuild)

Kit submitted by: JOHN SZOSTAK Ext. 2003

Fermi ID No. 02943C

Date submitted: 20-Oct-05

Need date: 31-Oct-05

Deliver to: ICB

Use with Traveler No. 333644

Job No. 248

M&S task number: 300 1.1.1.3.4

Drawing Title: Q2 CRYOSTAT ASSEMBLY (GENERAL)

Drawing No. ME-390206 Rev. D

RECEIVED OCT 21 2005 MATERIAL CONTROL/IB4

Material Control

Parts available

Verified by: M. Schmidt

Fermi ID No. 04223N

Date submitted to stockroom: 10/21/2005

Parts issued

Issued by:

Fermi ID No. 11639

Date issued: 10/27/05

Parts received by E&F:

Fermi ID No. 02943C

Date received by E&F: 10/27/05

	Description	Dwg Size	Number	Rev	Unit	Quantity Required	Location	Quantity Issued	E&F Verified	Routing Form Number	Spares Number / Comment
1	ADJUSTING SCREW	MB	390039	C	EA	6	IB4 Bin	6		83632	29 pcs.
2	VACUUM VESSEL ASSEMBLY	ME	390129	E	EA	1	CDF	1		81524	2 pcs.
3	TARGET HOLDER	MD	390211	B	EA	6	ICB HAS				
4	BLANK, NON ROTATABLE CONFLAT FLANGE, 4.62" OD	MA	390374	*	EA	12	ICB HAS				
5	COPPER GASKET	MA	390375	*	EA	12	IB4 Bin	12		83138	14 pcs.
6	BOLT SET, HEX HEAD 5/16 - 24 x 1.25 LG.	MA	390376	*	EA	120	ICB HAS				
7	WASHER, 0.656" ID x 1.38" OD x 0.13 THK., S.S. 26	MA	390377	*	EA	12	ICB HAS				
8	TAYLOR HOBSON SOCKET CUP	MA	390426	*	EA	12	ICB HAS				
9	75MM DIA. FLANGE COVER	MA	390491	*	EA	6	ICB HAS				
10	114MM DIA. FLANGE COVER	MA	390492	*	EA	4	ICB HAS				

TD - Engineering Fabrication Component Kit List

ORIGINAL

	Description	Dwg Size	Number	Rev	Unit	Quantity Required	Location	Quantity Issued	E&F Verified	Routing Form Number	Spares Number / Comment
11	134MM DIA. FLANGE COVER	MA	390493	*	EA	8	ICB HAS				
12	201MM DIA. FLANGE COVER	MA	390494	*	EA	2	ICB HAS				
13	ALIGNMENT FIDUCIAL COVER	MA	390495	*	EA	12	ICB HAS				
14	TARGET HOLDER, RIGHT	MD	390539	*	EA	3	ICB HAS				
15	TARGET HOLDER, LEFT	MD	390540	*	EA	3	ICB HAS				
16	COLD MASS FIDUCIAL MOUNTING BLOCK	MB	390809	*	EA	2	R1,1,3	2	[illegible]	82761	6 pcs.
17	ADJUSTING SCREW VERSION 2 (BRONZE)	MC	390878	*	EA	6	R7,1,2	6	[illegible]	83342	32 pcs.
18	M16-2 x 70mm HEX SHSC, S.S. 58	MA	393021	*	EA	12	ICB HAS				
19	M6 FLAT WASHER 18-8 S.S.	MA	393024	*	EA	48	ICB HAS				
20	SPRING PIN, 8 x 26	MA	393031	*	EA	12	ICB HAS				
21	M10-1.5 x 25mm HEX SHSC, S.S.	MA	393036	*	EA	36	ICB HAS				
22	M6-1.0 x 35mm HEX SHCS 18-8 S.S.	MA	393045	*	EA	24	ICB HAS				
23	M8 x 30mm SPRING PIN 18-8 S.S.	MA	393048	*	EA	12	ICB HAS				
24	M10 LOCK WASHER 18-8 S.S.	MA	393220	*	EA	36	ICB HAS				
25	M4 SPRING PIN SLOTTED, PLAIN STEEL	MA	393360	*	EA	24	ICB HAS				
Q2 INSULATED SHIELD & PIPING ASSEMBLY		ME	390207	*	EA	1	ICB HAS				
26	Q2 SHIELD MLI INNER BLANKET	ME	390313	*	EA	1	ICB HAS				
27	Q2 SHIELD MLI OUTER BLANKET	ME	390314	*	EA	1	ICB HAS				

ORIGINAL

TD - Engineering Fabrication Component Kit List

	Description	Dwg Size	Number	Rev	Unit	Quantity Required	Location	Quantity Issued	E&F Verified	Routing Form Number	Spares Number / Comment
	Q2 THERMAL SHIELD ASSEMBLY	ME	390161	C	EA	1	ICB HAS				
28	SUPPORT BAND	ME	390083	A	EA	8	ICB HAS				
29	RETAINER	MA	390086	*	EA	16	ICB HAS				
30	END SECTION	ME	390162	*	EA	4	ICB HAS				
31	MID SECTION	ME	390163	*	EA	4	ICB HAS				
32	CENTER SECTION	ME	390164	*	EA	2	ICB HAS				
33	COOLING TUBE WELDMENT	MD	390165	*	EA	2	ICB HAS				
34	ALUMINUM SPACER	MA	390373	*	EA	64	ICB HAS				
35	RETAINING WASHER	MA	390378	*	EA	394	IB4 Bin	394	[illegible]	83630	3750 pcs.
2 36	THERMAL SHIELD BRACKET	MD	390783	*	EA	4	ICB HAS				
37	M5 x 16mm BUTTON HEAD CAP SCREW	MA	393028	*	EA	394	IB4 Bin	394	[illegible]	83626	3909 pcs.
	Q2 CRYOSTAT ASSEMBLY INTERNAL PIPING	ME	390208	E	EA	1					
38	HEAT EXCHANGER OUTER SHELL END FLANGE	MC	390031	B	EA	2	IB4 Bin	2	[illegible]	77209	43 pcs.
39	PUMPING LINE END FLANGE	MC	390032	B	EA	2	IB4 Bin	2	[illegible]	77210	43 pcs.
40	COOL DOWN LINE END FLANGE	MB	390033	B	EA	2	IB4 Bin	2	[illegible]	77208	25 pcs.
41	RETAINING CLIP	MA	390103	*	EA	16	IB4 Bin	16	[illegible]	76785	67 pcs.
42	HEAT EXCHANGER TO COLD MASS CONNECTOR	MC	390111	A	EA	1	R1,2,2	1	[illegible]	83159	2 pcs.
3 43	TIE BAR RETAINING CLAMP	MB	390136	*	EA	8	ICB HAS				

TD - Engineering Fabrication Component Kit List

ORIGINAL

	Description	Dwg Size	Number	Rev	Unit	Quantity Required	Location	Quantity Issued	E&F Verified	Routing Form Number	Spares Number / Comment
44	PUMPING LINE PIPE STOP	MB	390149	*	EA	4	IB4 Bin	4	[illegible]	77133	32 pcs.
45	COOL DOWN LINE PIPE STOP	MB	390150	*	EA	4	IB4 Bin	4	[illegible]	77134	30 pcs.
46	Q2 4.5K INTERCEPT LINE TUBE	MB	390204	*	EA	2	P/N	2	[illegible]	83746	5 pcs.
47	Q2 PIPE SUPPORT ASSEMBLY	MD	390258	A	EA	4	ICB HAS				
48	INTERCEPT LINE PIPE STOP	MA	390379	A	EA	6	IB4 Bin	6	[illegible]	78894	81 pcs.
49	PIPE SUPPORT BRACE	MB	390452	A	EA	4	ICB HAS				
50	M6 x 45mm HEX SHCS, S.S.	MA	393017	*	EA	8	ICB HAS				
51	M6 HEX NUT, S.S.	MA	393022	A	EA	8	ICB HAS				
52	M6 FLAT WASHER, S.S.	MA	393024	*	EA	8	ICB HAS				
53	M6 LOCK WASHER, S.S.	MA	393026	*	EA	8	ICB HAS				
54	Q2 COOLDOWN LINE REBUILD WELDMENT	MD	390887	*	EA	1					
55	TUBE EXTENSION WELD FITTING	MC	390881	*	EA	2	R1,3,3	2	[illegible]	83546	4 pcs.
56	COOLDOWN LINE STD. 20 FT LONG TUBE	MD	390885	*	EA	2	ICB	2	[illegible]	83503	4 pcs.
57	Cool Down CENTER TUBE	MD	390886	*	EA	1	ICB	1	[illegible]	83504	3 pcs.
58	Q2 PUMPING LINE REBUILD WELDMENT	MD	390890	*	EA	1					
59	PUMPING LINE PIPE EXTENSION WELD FITTING	MC	390883	*	EA	2	R1,3,3	2	[illegible]	83547	2 pcs.
60	PUMPING LINE 20 FT LONG PIPE	MD	390888	*	EA	2	ICB	2	[illegible]	83505	6 pcs.
61	PUMPING LINE CENTER PIPE	MD	390889	*	EA	1	ICB HAS				

ORIGINAL

TD - Engineering Fabrication Component Kit List

	Description	Dwg Size	Number	Rev	Unit	Quantity Required	Location	Quantity Issued	E&F Verified	Routing Form Number	Spares Number / Comment
	Q2 HEAT EXHANGER REBUILD ASSEMBLY	ME	390884	*	EA	1					
	CORRUGATED TUBE ASSEMBLY	ME	390143	A	EA	1					
62	HEAT EXCHANGER CORRUGATED TUBE SUPPORT	MD	390028	*	EA	8	ICB HAS				
63	HEAT EXCHANGER CORRUGATED TUBE RESTRICTOR	MD	390029	A	EA	2	ICB HAS				
64	Q2 HEAT EXCHANGER CORRUGATED TUBE WELDMENT	ME	390394	*	EA	1	ICB HAS				
65	OUTER SHELL 20 FT. LONG PIPE	MD	390882	*	EA	2	ICB	2			4 pcs.
66	OUTER SHELL CENTER PIPE	MD	390880	*	EA	1	ICB	1			3 pcs.
67	OUTER SHELL EXTENSION WELD FITTING	MD	390879	*	EA	2	R1,3,2	2		83545	4 pcs.
	Q2 PIPING INSULATION	ME	390306	A	EA	1					
68	COLD MASS MLI CENTER BLANKET	ME	390305	*	EA	1	ICB HAS				
69	PIPING MLI END BLANKET	ME	390307	*	EA	2	ICB HAS				
70	PIPING MLI MID BLANKET	ME	390308	*	EA	2	ICB HAS				
	Q2 SUSPENSION SYSTEM INSTALLATION ASSEMBLY	ME	390310	*	EA	1					
71	TIE BAR SHIM, 6.4mm	MB	390118	*	EA	6	ICB HAS				
72	TIE BAR SHIM, 2.4mm	MB	390119	*	EA	6	ICB HAS				
73	TIE BAR SHIM, 0.6mm	MB	390120	*	EA	6	ICB HAS				
74	Q2 TIE BAR ASSEMBLY	MC	390167	*	EA	4	ICB HAS				
75	OUTBOARD SUSPENSION MOUNTING BRACKET	MD	390280	*	EA	4	ICB HAS				

4

ORIGINAL

TD - Engineering Fabrication Component Kit List

	Description	Dwg Size	Number	Rev	Unit	Quantity Required	Location	Quantity Issued	E&F Verified	Routing Form Number	Spares Number / Comment
76	MIDDLE SUSPENSION MTG BRACKET	MD	390281	*	EA	2	ICB HAS				
77	Q2 COLD MASS WELDED ASSEMBLY	ME	390309	B	EA	1	ICB HAS				
78	M8 x 50mm SHCS, S.S. NEEDED 6	MA	393020	*	EA	18	ICB HAS				
79	M8 HEX NUT, S.S.	MA	393023	*	EA	18	ICB HAS				
80	M8 FLAT WASHER, S.S.	MA	393025	*	EA	18	ICB HAS				
81	M8 LOCK WASHER, S.S.	MA	393027	*	EA	18	ICB HAS				
	FIXED SUPPORT ASSEMBLY	ME	390041	D	EA	1	ICB HAS				
82	RING ASSEMBLY	ME	390043	B	EA	1	ICB HAS				
83	SUPPORT PIN	MB	390047	B	EA	2	ICB HAS				
84	1.0 mm THK SHIM	MA	390275	A	EA	8	ICB HAS				
85	0.5 mm THK SHIM	MA	390276	*	EA	8	ICB HAS				
86	M16 x 40.0 mm LG SHOULDER SCREW, 18-8 S.S. NEED 4	MA	390277	*	EA	8	ICB HAS				
87	TWO-PIECE CLAMP-ON COLLAR	MA	390321	A	EA	4	ICB HAS				
88	0.13 mm THK SHIM	MA	390480	*	EA	8	ICB HAS				
89	0.25 mm THK SHIM	MA	390481	*	EA	12	ICB HAS				
	SLIDING SUPPORT ASSEMBLY	ME	390042	C	EA	2	ICB HAS				
90	RING ASSEMBLY	ME	390043	B	EA	2	ICB HAS				
91	SUPPORT PIN	MB	390047	B	EA	4	ICB HAS				

ORIGINAL

TD - Engineering Fabrication Component Kit List

	Description	Dwg Size	Number	Rev	Unit	Quantity Required	Location	Quantity Issued	E&F Verified	Routing Form Number	Spares Number / Comment
92	1.0 mm THK SHIM	MA	390275	A	EA	16	ICB HAS				
93	0.5 mm THK SHIM	MA	390276	*	EA	16	ICB HAS				
24 NEW 94	M16 x 40.0 mm LG SHOULDER SCREW, 18-8 S.S. 82	MA	390277	*	EA	16	ICB HAS				
95	0.13 mm THK SHIM	MA	390480	*	EA	16	ICB HAS				
96	0.25 mm THK SHIM	MA	390481	*	EA	24	ICB HAS				
	Q2 INSULATION INSTALLATION ASSEMBLY	ME	390302	A	EA	1	ICB HAS				
97	MLI END BLANKET	ME	390303	*	EA	2	ICB HAS				
98	MLI MID BLANKET	ME	390304	*	EA	2	ICB HAS				
99	MOUNTING LUG BLANKET	MC	390496	*	EA	8	ICB HAS				
	Q2 INSTALLATION TIE-ROD ASSEMBLY	MC	390637	*	EA	4	ICB HAS				
100	SHORT END THREAD ROD IN STOCK 2	MA	390635	*	EA	12 4	ICB HAS				
101	JAM NUT (LH) 14	MA	393046	*	EA	16 8	ICB HAS				
102	JAM NUT (RH) 68	MA	393225	*	EA	15 16	ICB HAS				
103	COUPLING NUT (RH / LH) 21	MA	393226	*	EA	6 8	ICB HAS				
104	THREAD ROD (RH) 6 FT. LONG 6	MA	393227	*	EA	0 4	ICB HAS				
105	THREAD ROD (LH) 3 FT. LONG 7	MA	393228	*	EA	3 4	ICB HAS				

Traveler Title:	Specification No:	Revision:	DR No:
Q2 LQXB Cryostat Final Assembly Traveler	333644	H	4311

Step No:	Drawing No:	Routing Form No:	Serial No:	Rework ID:
7.5	369895		LQXB10	0

Discrepancy Description:

The lead end hypertronics connector was damaged during the cryostat assembly process. It is unknown how the connector got damaged. The first two rows of the connector have the pins bent and broken.

Originator: Steve Gould

Date: 12/8/2005 1:58:59 PM

Cause of Nonconformance:

Cause of damage unknown.

Responsible Authority: Andy Hocker

Date: 12/8/2005 5:16:46 PM

Disposition:

Replace the two modules with bent pins. do usual electrical check-out
Disposition verify notes: (Magnet repairs were completed by production, tested O.K., and magnet was approved for further processing. Bob Jensen).

Responsible Authority: Andy Hocker

Date: 12/8/2005

Corrective Action to Prevent Recurrence:

None

Responsible Authority: Andy Hocker

Date: 12/8/2005

Corrective Action/Disposition Verified By: Bob Jensen

Date: 5/23/2006 2:15:53 PM

Will Configuration be affected?: ☐ YES ☑ NO

Identified problem area:

☐ Material ☐ Manpower ☑ Method ☐ Machine ☐ Measurement

Reviewed By: Bob Jensen

Date: 5/23/2006

Revision Request Control Number: 1799

Specification Number: 5520 - TR - 333644 Current Revision: H

Traveler or Document Title Q2 LQXB Cryostat Final Assembly Traveler

Step #/Description of Revision:

Prior to assembling the tube sections on a Q2 rebuild, ensure the weld prep is on the tubes. If there is no weld prep, add a weld prep to the tubes. Also, tack weld the backing strips in place prior to tack welding the tubes. Add these steps to the rebuild travelers.

Regular Traveler:

New Steps;

9.3 Hipot Strip Heaters to everything @ 5 KV and record voltage and leakage.

9.4 Hipot coils to everything @ 5 KV and record voltage and leakage.

Bob Jensen	Bob Jensen	1/11/2006
Originator	Responsible Authority	Date

Revision Incorporated into the Traveler:

Revision Incorporated By	Date

Process Engineering Final Review:

Process Engineering/Designee	Date

Instructions for the completion of the Revision Request Form

Note(s):

Multiple steps may be effected by one Revision Request Form but only one specific Traveler or Document may be effected by each Revision Request Form.

If completing this form by hand, a Revision Request Control Number must be obtained before processing.

If completing this form entirely by electronic means, the printed copy to be filed in the Process Engineering Office is to be initialed by the individual incorporating the Revision Request and the individual who reviewed the Traveler or Document.

Originator Instructions:

1) Specification Number: - Enter the Specification Number of the Traveler or Document to be revised. (Document title is inserted automatically from the spec. #)

2) Current Revision: - Enter the Revision of the Traveler or Document to be revised.

3) Step# / Description of the Revision: - Enter a description of the revision to be made and the step# it applies to, if applicable. If needed to describe the revision attach a copy of the page(s). If the revision is coming from a related document such as a Discrepancy Report or an Engineering Order attach a copy of that document to the Revision Request Form.

4) Originator: - Originator is the person generating the form. (Select Name from List)

5) Responsible Authority: - Responsible Authority is person responsible for the process in question. (Select Name from List)

Process Engineering Office Instructions:

1) Revision Incorporated into the Traveler: - Signature of the individual who incorporated the revision.

2) Process Engineering Final Review: - Review the Traveler or Document revised, sign and date the form. The original completed Revision Request Form will be retained by the Process Engineering Office in the Revision Request Binder.