Document ID:

3274

LHC Q3 LMQXC Module Assembly Traveler

333729 / Rev. NONE

Job No:	**248**
E + F Project/Task No.:	**300/1.1.1.6.3**
M + S Project/Task No.:	**300/1.1.1.6.2**

Place This Side Down For Scanning!!!

Magnet Travelers

LMQXC01-0

Document ID:

3274

Job No.:

248

Project/Task No.

300/1.1.1.6.3

Series:

LQXC

Serial No:

LMQXC01

Rework ID:

0

Specification No.:

333729

Revision:

NONE

LMQXC01-0

Fermi National Accelerator Laboratory
Batavia, IL 60510

LARGE HADRON COLLIDER
Q3 - LMQXC
COLD MASS MODULE ASSEMBLY TRAVELER

Reference Drawing(s):
Q3 Cold Mass Welded Assembly (ME-390529)
Q3 Module Assembly (ME-369900)

Project/Task Number: *300/1.1.1.6.2*

Released By: *John Szostak* **Magnet/Device Series:** *LQXC*

Date Issued: *10/1/2004 10:40:41 AM* **Scanned Pages:** 133

Prepared by: J. Szostak

Title	Signature	Date
TD / E&F Process Engineering	*Bob Jensen* Bob Jensen / Designee	*8/20/04*
TD / LHC Production Supervisor	*Jim Rife* Jim Rife / Designee	*8/20/04*
TD / LHC Production Engineer	*Rodger Bossert* Rodger Bossert / Designee	*8/23/04*
TD / LHC Project Engineer Cryostat	*Tom Nicol* Tom Nicol / Designee	*8/20/04*
TD / LHC Project Physicist	*Mike Lamm* Michael Lamm / Designee	*8/26/04*
TD / LHC Program Manager	*Tom Nicol* Jim Kerby / Designee	*8/20/04*

Revision Page

Revision	Step No.	Revision Description	TRR No.	Date
None	N/A	Initial Release	N/A	8/20/04

Ensure appropriate memos and specific instructions are placed with the traveler before issuing the sub traveler binder to production.

1.0 General Notes

1.1 All steps that require a sign-off shall include the Technician/Technician(s)s first initial and full last name.

1.2 No erasures or white out will be permitted to any documentation. All incorrectly entered data shall be corrected by placing a single line through the error, initial and date the error before adding the correct data.

1.3 All Discrepancy Reports issued shall be recorded in the left margin next to the applicable step.

1.4 Personnel shall perform all tasks in accordance with current applicable ES&H guidelines and those specified within the step.

1.5 Cover the product/assembly with Green Herculite (Fermi stock 1740-0100) when not being serviced or assembled.

2.0 Parts Kit List

2.1 Attach the completed Parts Kit for this production operation to this traveler. Ensure that the serial number on the Parts Kit matches the serial number of this traveler. Verify that the Parts Kit received is complete.

NA

Process Engineering/Designee Date

Parts Kit was not completed.
Parts Ordered on APR forms.
— J. Gostak

3.0 Q3 Module Alignment

XXX 3.1 Record the serial number for each Magnetic Component Assembly.

Q3 Serial Number: MQXA-07

MCBXA Corrector Coil Serial Number: HCMCBX-001-SI000008

MQSX Corrector Coil Serial Number: HCMCSX-001-AN000001

MCSOX Corrector Coil Serial Number: HCMCSOX-001-AN000001

Responsible Authority/Physicist — Date: 7-29-04

3.2 Attach the Certificate of Conformity, for vendor supplied components, and the Quality Record, for vendor supplied components, to this traveler.
Verify that the Certificate of Conformity and /or the Quality Record (as required) has been filled out and performed by Fermilab personnel.

Crew Chief — Date: 7/29/04

4.0 Q3 Magnet Placement (Module Assembly Tooling)

4.1 Configure tooling for Q3 Cold Mass Assembly (ME-390528) per Final Coldmass Assembly Stat – Support and Clamping Fixture (ME-369768).

A Gould 7/29/04
Technician(s) Date

4.2 Configure tooling for Corrector Mounting per Cold Mass / Cryostat Station Corrector Support Fixture (ME-369780), 13.780 Diameter Corrector Magnet.

A Gould 7/29/04
Technician(s) Date

4.3 Configure tooling for End Dome Mounting per Cold Mass Cryostat Station Final Assembly (ME-369765, View E-E).

A Gould 7/29/04
Technician(s) Date

4.4 Move the Q3 Cold Mass to the Cold Mass Module Assembly Tooling, placing it nearest the West End of ICB, with the Lead End of the Magnet facing west as per Q3 Cold Mass Welded Assembly (ME-390529).

A Gould 7/29/04
Technician(s) Date

5.0 Bus Assembly Installation

5.1 Cut two pieces of Nomex (MB-430064) each four feet longer than the Cold Mass length.

Technician(s) _____ Date 7-27-04

5.2 Pull the two pieces of Nomex (MB-430064) through the Bus Slot. Leave two feet hanging out on each end. Fold top piece over top of Cold Mass and bottom piece on bottom of Cold Mass.

Technician(s) _____ Date 7-27-04

5.3 Slide the Lead and Corrector Coil Bus Assembly (MB-430065) into Magnet Bus Slot between the two pieces of Nomex (MB-430064).

Technician(s) _____ Date 7-27-04

6.0 Q3 Cold Mass Alignment

6.1 Rotate the Q3 Cold Mass, with the Power Leads facing up, into the proper orientation as shown in Figure 6.1-A.

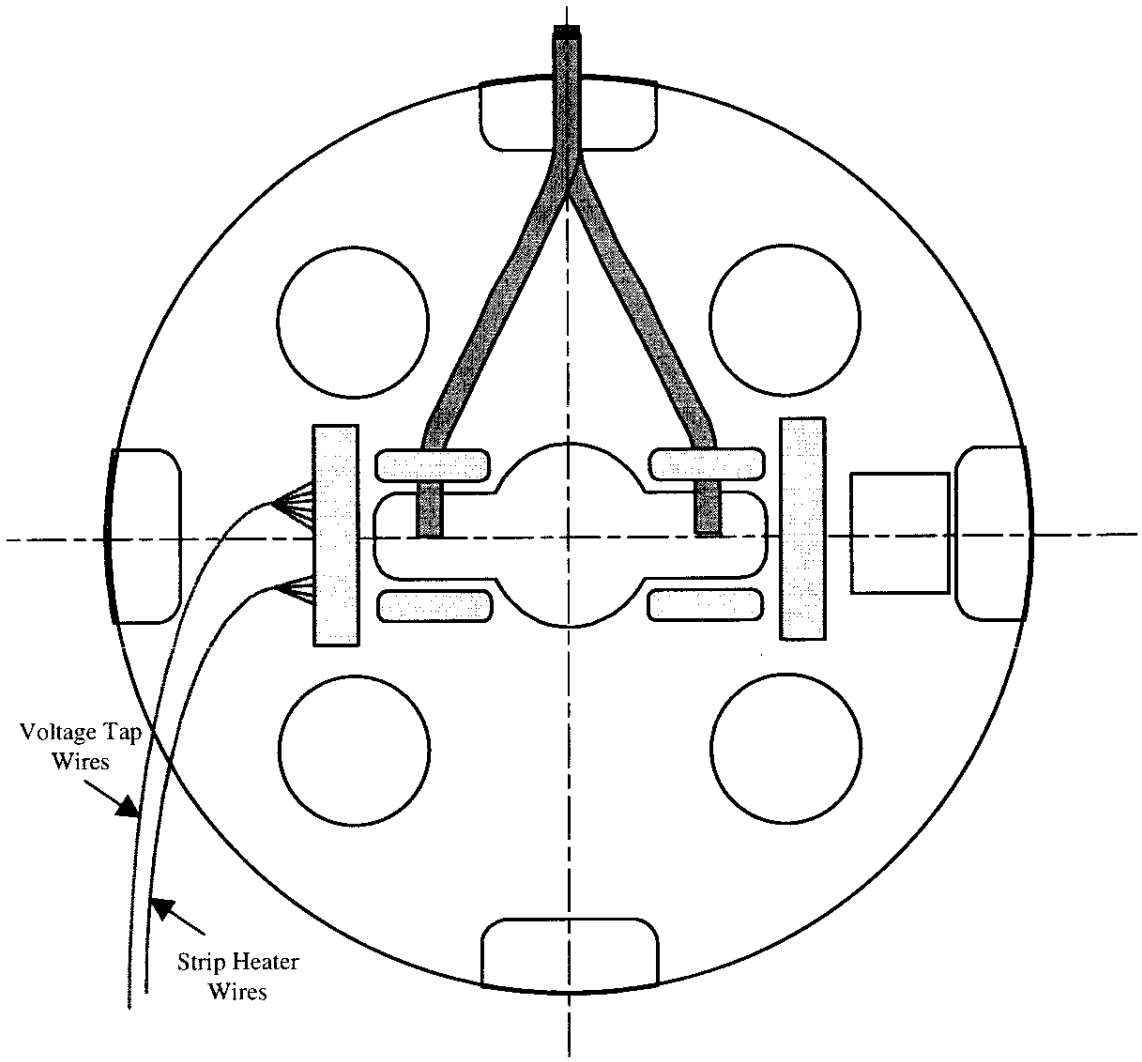

Looking at Lead End of Q3

Figure 6.1-A

Technician(s) _____ Date 7/30/04

XXX 6.2 Perform a stretched wire measurement of the system to align the Cold Mass within ± .2 mR.

Responsible Authority/Physicist _____ Date 7/30/04

7.0 Instrumentation Installation

7.1 Prepare Q3 Instrumentation Wire Feed thru (MB-430074). Build per Q3 Module Assembly Instrumentation Wire Feed thru (ME- 430074). Wire Labels and descriptions are shown in Figure 7.1 and per (MB-430074).

Note(s):

USE ONLY CERN LABELS ON WIRES.

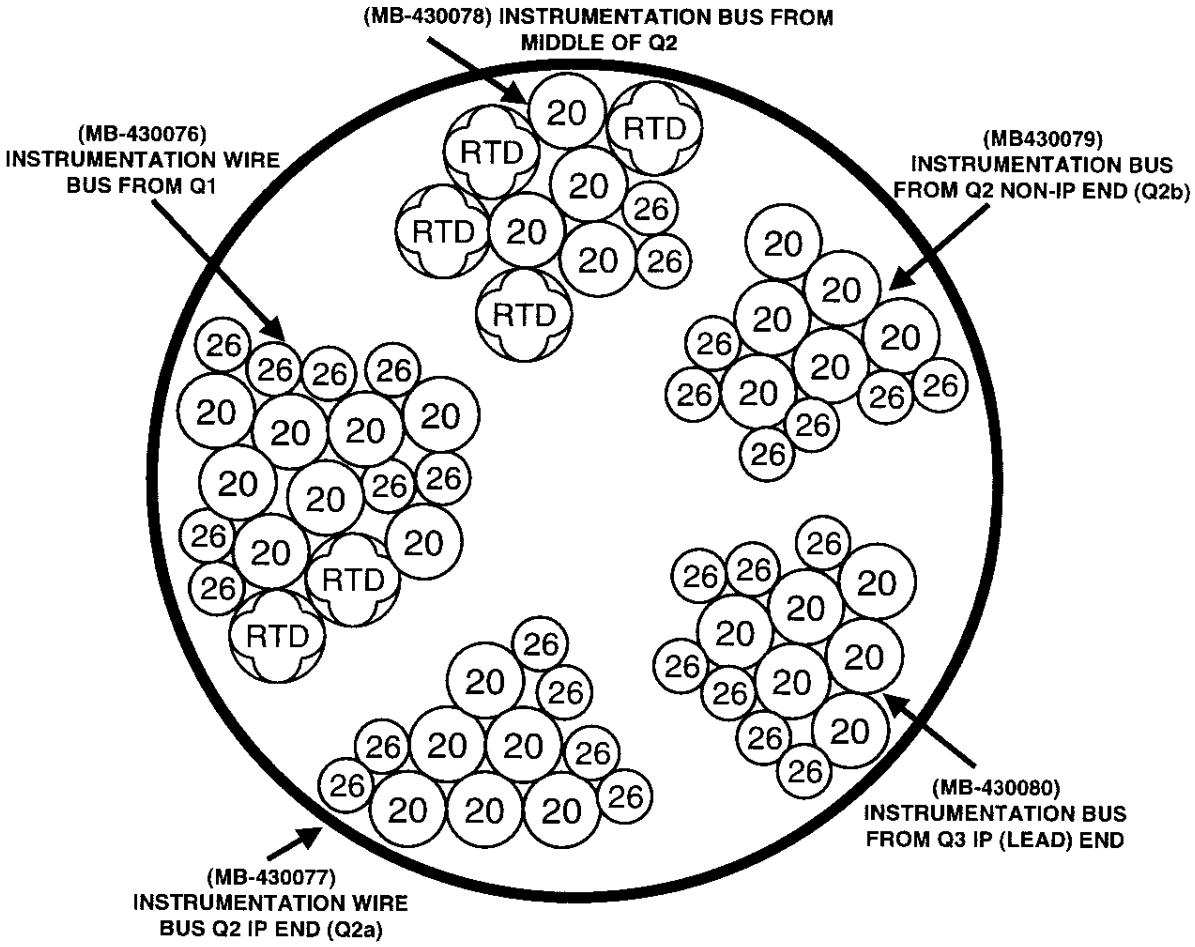

Figure 7.1
INSTRUMENTATION TUBE

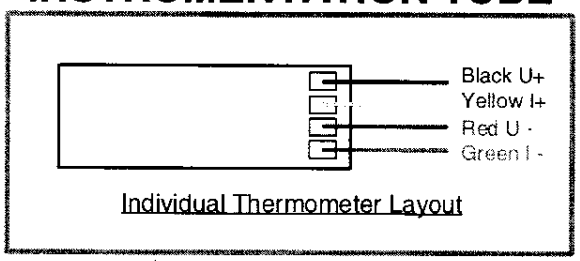

Technician(s) _____ Date 7/30/04

7.2 Slide Instrumentation Bus Assembly (MB-430074) into the proper Q3 Port as per Q3 Module Assembly (ME-369900). Verify that there is sufficient slack in cable to allow for two inches of differential thermal contraction.

Technician(s) _____ Date 7/30/04

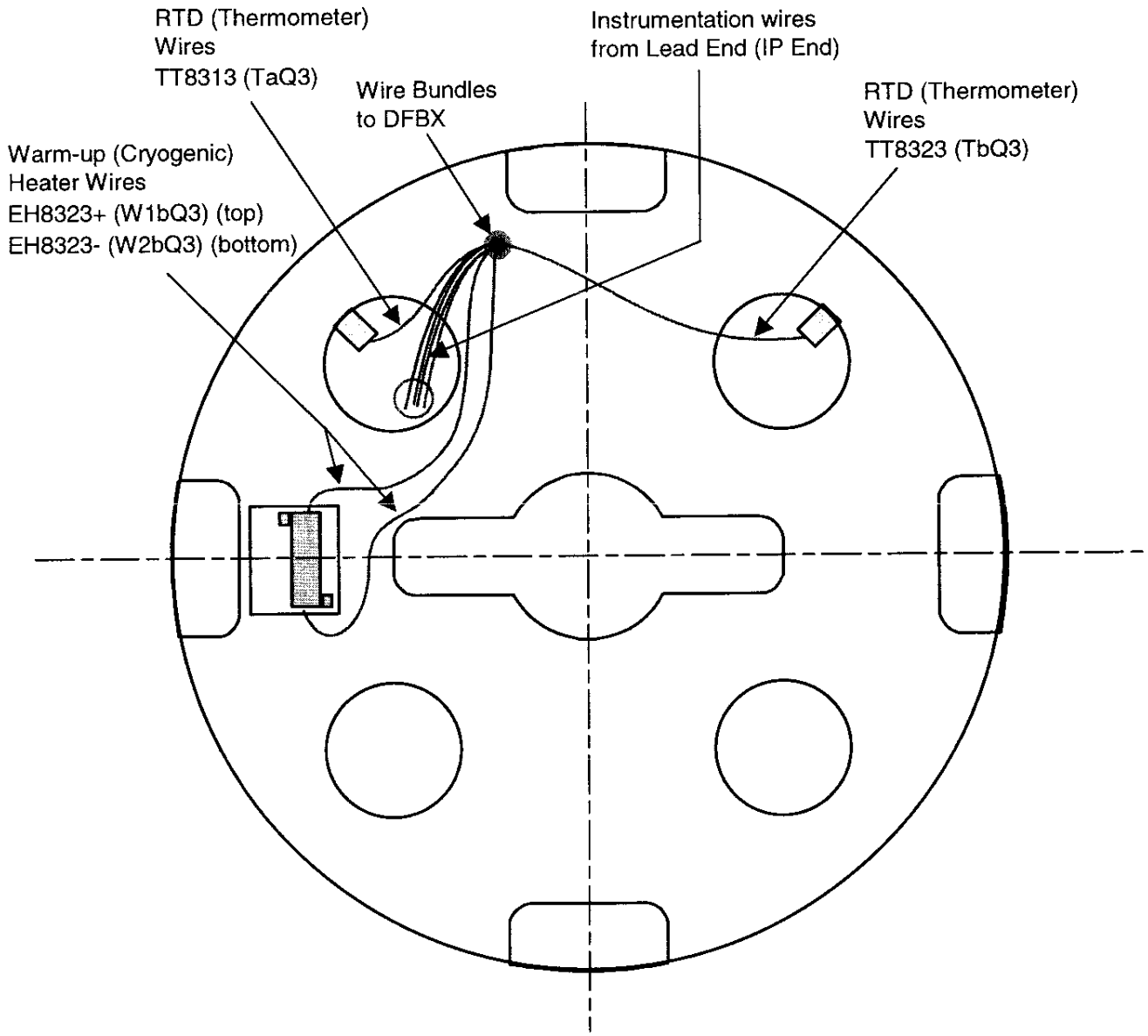

Looking at Non-Lead End (Non-IP End) of Q3

Figure 7.2-A

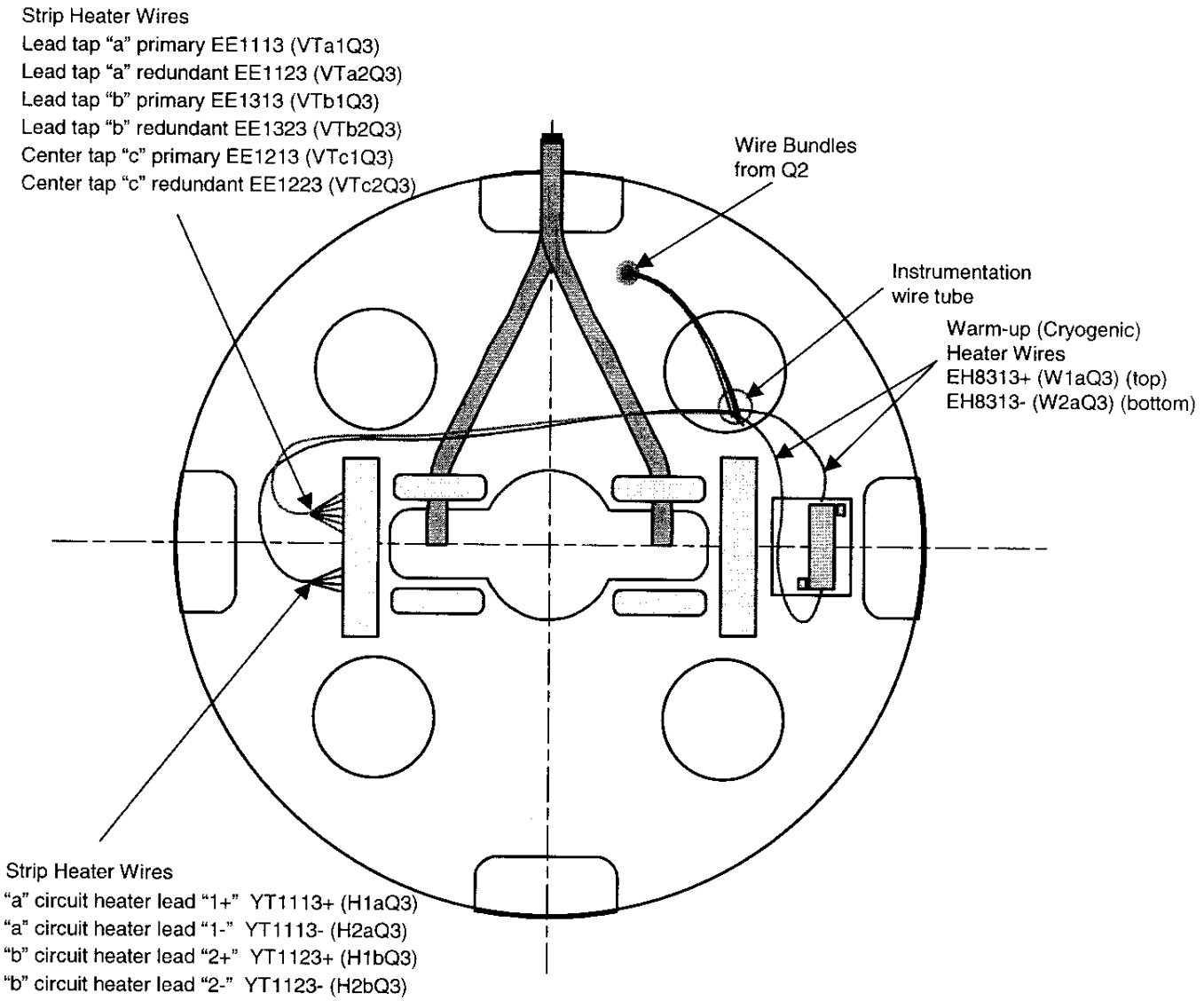

Looking at Lead End (IP end) of Q3

Figure 7.2-B

7.3 Weld Warm-up Heater Base Plates (MA-369997) and RTD Mount Blocks to End Plates as per Q3 Module Assembly (ME-369900).

Weldor(s) _____ Date 7/30/04

7.4 Install Warm-up Heaters (ME-369834) to each end of Q3 as per Q3 Module Assembly (ME-369900).

7.4.1 Install Warm-up Heaters (MA-369834) onto the Warm-up Heater Base Plate (MA-369997).

7.4.2 Solder wires (MA-369832) to the Warm-up Heaters as per (ME-369900).

Technician(s) _____ Date 7/30/04

7.5 Install RTD's as per Q3 Module Assembly (ME-369900). Record Serial Numbers of each RTD in the table below. Attach Data Sheet for each RTD to traveler.

7.5.1 Attach RTD's (MA-369835) (Qty. 4) to Mounting Blocks as per Q3 Module Assembly (ME-369900).

7.5.2 Solder wires (MA-369836) to RTD's as per Q3 Module Assembly (ME-369900). Individual RTD wiring is shown in Figure 7.5.2-A below.

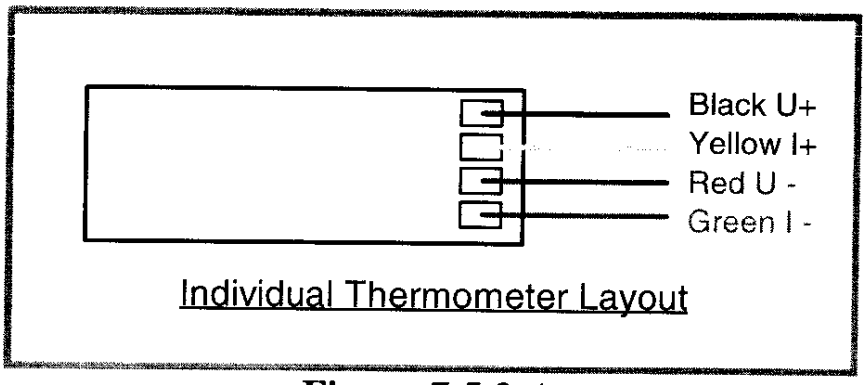

Figure 7.5.2-A

Technician(s) _____ Date 7/30/04

7.6 Fill out the Cryogenic Thermometer Traveller that came with the RTD.
Fill out:

- Corrector Tag Name
- Date
- Resistance Measurement
- Temperature (i.e. 77° F)
- Firm/Laboratory (Fermi)
- Checked By (Print Last Name)

Once all information has been filled out, make a copy of the Cryogenic Thermometer Traveller and place copy in designated binder.

Technician(s) _____ Date 7/30/04

Crew Chief _____ Date 7.30.04

7.7 Perform a continuity check on all RTD's and Warm-Up Heaters. Record the Data below. (1mA). Record the resistance data from the Manufacturer's Traveler below. Compare RTD resistance test results to the resistance results from the Manufacturer's Traveler. Ensure RTD resistances are within **5Ω**. Attach the Manufacturer's RTD papers at the end of this traveler.

To measure the resistance of a Thermometer (RTD):

1. Use Hewlett Packard HP3457A digital multimeter.
2. Record temperature of building within +/- 5 degrees.
3. Press line button to turn line on.
4. Connect wires as shown in Figure below.
5. Push blue button (function key) once.
6. Push OHMF button.
7. Verify arrow in readout is above the 4WΩ (meaning a 4 wire resistance measurement).
8. Read resistance in ohms and record in traveler.

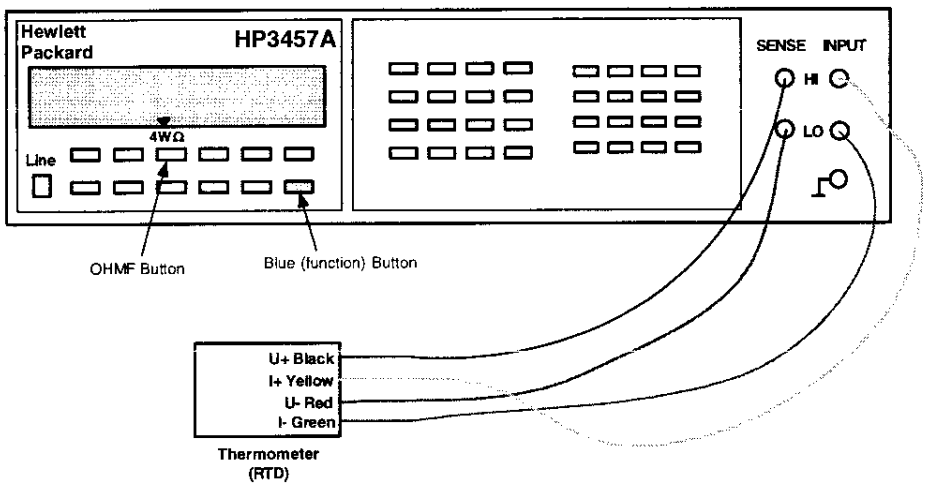

RTD'S			
Building Temperature: 75°		**Time of Test:** 4:00	
Serial No.	**Location**	**Measured Ω**	**Mfr. Resistance (Expedition)**
TT8313	Q3 Inst. Bus Side	72.550 Ω	71.399 Ω
TT8323	Q3 Inst. Non-Bus Side	66.945 Ω	65.556 Ω

Cryogenic (Warm-up) Heaters		
Building Temperature: 75°		**Time of Test:** 4:00
Location	**Wire No**	**Measured Ω**
Q3 Lead End (IP End)	**EH8313+**	16.586 Ω
	EH8313-	
Q3 Non-Lead End (Non-IP End)	**EH8323+**	16.191 Ω
	EH8323-	

Technician(s) _____ Date 7/30/04

7.8 Hipot RTD's to 100V. Use Droege Serial No. 910 (FNAL Part No. 51330) or equivalent. (Max. Leakage < 0.1 μA)

STOP

Have Crew Chief verify setup and sign below before continuing.

Crew Chief _____ Date 8/13/04

RTD'S		
Building Temperature: 72°		**Time of Test:** 11:05
Serial No.	**Location**	**Hipot Leakage < 0.1 μA**
TT8313	Q3 Inst. Bus Side	< .1 μA
TT8323	Q3 Inst. Non-Bus Side	< .1 μA

Hipot Cryogenic (Warm-up) Heaters to 300V. Use Droege Serial No. 910 (FNAL Part No. 51330) or equivalent. (Max. Leakage < 0.1 μA)

STOP

Have Crew Chief verify setup and sign below before continuing.

Crew Chief _____ Date 8/13/04

Warm-up Heaters		
Building Temperature: 72°		**Time of Test:** 11:05
Location	**Wire No**	**Hipot Leakage < 0.1 μA**
Q3 Lead End (IP End)	**EH8313+**	< .1 μA
	EH8313-	
Q3 Non-Lead End (Non-IP End)	**EH8323+**	< .1 μA
	EH8323-	

Technician(s) _____ Date 8/13/04

7.9 Mount the MCBXA Corrector Mounting Ring (ME-390037) to the MCBXA Corrector Magnet.

Technician(s) _____ Date 8/6/04

7.10 Position and align the MCBXA Corrector Magnet.

Technician(s) _____ Date 8/6/04

7.11 Tack weld the MCBXA Corrector Mounting Ring (ME-390037) to the Q3 Cold Mass Assembly (ME-390528) per Q3 Cold Mass Welded Assembly (ME-390529).

Weldor _____ Date 8/9/04

7.12 Weld the MCBXA Corrector Mounting Ring (ME-390037) to the Q3 Cold Mass Assembly (ME-390108) Non-Lead End per Q3 Cold Mass Welded Assembly (ME-390529).

Weldor _____ Date 8/9/04

7.13 Disassemble the MCBXA Corrector Magnet from the MCBXA Corrector Mounting Ring (ME-390037).

Technician(s) _____ Date 8/6/04

7.14 Mount the MQSX Corrector Mounting Ring (MD-390209) to the MQSX Corrector Magnet.

Technician(s) _____ Date 8/7/04

7.15 Position and align the MQSX Corrector Magnet per Q3 Cold Mass Welded Assembly (ME-390529).

Technician(s) _____ Date 8/7/04

7.16 Tack weld the MQSX Corrector Mounting Ring (MD-309209) to the Q3 Cold Mass Assembly (ME-390528) per Q3 Cold Mass Welded Assembly (ME-390529).

Weldor _____ Date 8/9/04

7.17 Weld the MQSX Corrector Mounting Ring (MD-309209) to the Q3 Cold Mass Assembly (ME-390528) Lead End per Q3 Cold Mass Welded Assembly (ME-390529).

Weldor _____ Date 8/9/04

7.18 Disassemble the MQSX Corrector Magnet from the MQSX Corrector Mounting Ring (MD-309209).

Technician(s) _____ Date 8/9/04

8.0 Splicing the Power Leads

DR# HGQ-0488 (4843) Broken Corrector Lead J. Rife 8/20/04

copied from "DRAFT" by J. Spostak

8.1 Set up the Power Leads for splicing as shown in the Q3 Module Assembly Drawing (ME-369900).

Technician(s) _____ Date 8/11/04

8.2 Construct / Obtain Expansion Loop Tail per Drawing (MX-430XXX).

Technician(s) _____ Date 8/11/04

8.3 Solder the Upper Magnet Lead (Terminal "A", Quadrant 4) to the Lower 8kA Bus as per Q3 Module Assembly Drawing (ME-369900).

Technician(s) _____ Date 8/11/04

8.4 Solder the Lower Lead to the expansion Loop Tail from Step 8.2 as per Q3 Module Assembly Drawing (ME-369900).

Technician(s) _____ Date 8/11/04

8.5 Insulate each splice with 2/3 overlap, .002 x 3/8 wide kapton, (MA-292722).

Technician(s) _____ Date 8/12/04

8.6 Insert a piece of .005 kapton between splices.

Technician(s) _____ Date 8/12/04

8.7 Put splices together and insulate splice area with ¾ overlap, .002 x 3/8 wide Kapton (MA-292722).

Technician(s) _____ Date 8/12/04

8.8 Attach Q3 Bus Splice Clamp Assembly (MD-430031) to Q3 Lead as per Q3 Module Assembly (ME-369900).

Technician(s) _____ Date 8/13/04

Q3 Wiring System

R. Bossert 6-29-2004

Note: Corrector tap wires are not shown. They will be installed after correction coils are mounted. They are listed below:

MQSX Corrector, MQSX, A+ lead Q3A2 (skew quadrupole) voltage tap EE8223 (VTA2)
MCBXA Corrector, MCBXH, A+ lead Q3H3 (skew dipole) voltage tap EE8123 (VTH3)
MCBXA Corrector, MCBXV, A+ lead Q3V3 (normal dipole) voltage tap EE8113 (VTV3)
MCBXA Corrector, MCSX, A+ lead Q3B3 (normal sextupole) voltage tap EE8313 (VTB3)
MCBXA Corrector, MCTX, A+ lead Q3B6 (normal dodecapole) voltage tap EE8613 (VTB6)
MCSOX Corrector, MCSSX, A+ lead Q3A3 (skew sextupole) voltage tap EE8323 (VTA3)
MCSOX Corrector, MCOSX, A+ lead Q3A4 (skew octupole) voltage tap EE8423 (VTA4)
MCSOX Corrector, MCOX, A+ lead Q3B4 (normal octupole) voltage tap EE8413 (VTB4)

9.0 Installation of MQSX Corrector Coil

9.1 Move the MQSX Corrector Magnet up against the Mounting Ring on the Q3 Cold Mass and bolt the MQSX Corrector Magnet to the Q3 Cold Mass using the Silver Plated Mounting Screw and torque bolts to 500 in.-lbs. Shim between the corrector and flange as necessary.

Technician(s) _____ Date 9/15/04

9.2 Verify alignment of MQSX Corrector Magnet as per Q3 Module Assembly (ME-369900).

Technician(s) _____ Date 9/15/04

Responsible Authority/Physicist _____ Date 9/15/04

9.3 Tack weld bolts and washers for mounting MQSX Corrector Magnet into place per Q3 Cold Mass Welded Assembly (ME-390529).

TRR # 1682

Technician(s) _____ Date 9/15/04

9.4 Attach IP (Lead) End Buss Crossover Block Assembly (MD-430095) as per Q3 Module Assembly (ME-369900).

Technician(s) _____ Date 9/15/04

9.5 Attach Cable Clamp Assemblies as per Q3 Module Assembly (ME-369900).

Technician(s) _____ Date 9/15/04

9.6 Solder MQSX Corrector Wires.

Technician(s) _____ Date 9/15/04

9.7 Route Cable and Corrector Leads on IP (Lead) End as shown below and per Q3 Module Assembly (ME-369900).

Lead Bus Orientation through Q3

R. Bossert 3-29-04

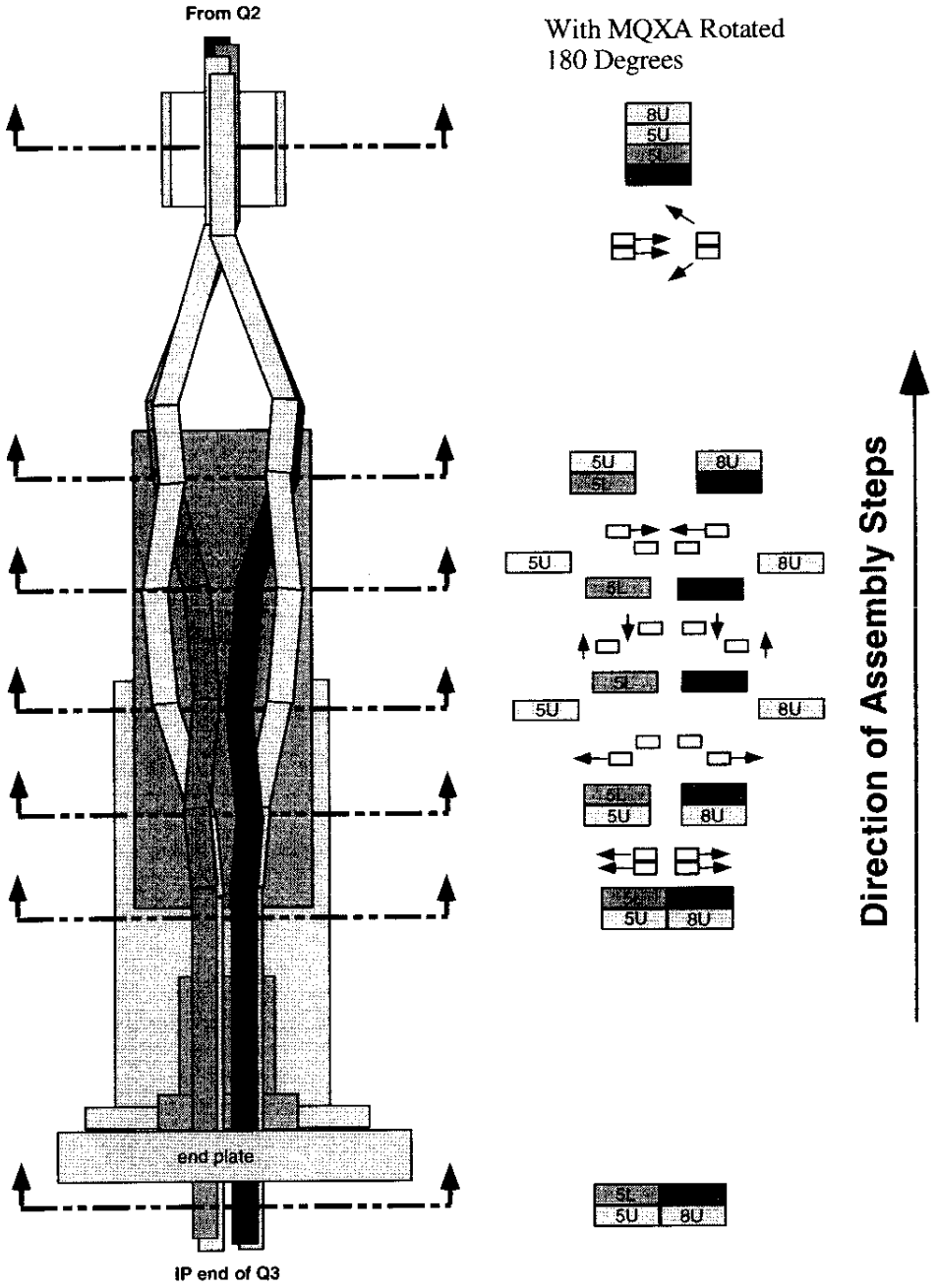

Figure 9.7-A

Technician(s) _____ Date 9-15-04

9.8 Attach Backing Splines as per Q3 Module Assembly (ME-369900).

Technician(s) _____ Date 9-15-04

9.9 Wrap the Springboard Assemblies in Kapton and then wrap with Kevlar String (MA-369912) every ½ - ¾" over Kapton as per Q3 Module Assembly (ME-369900).

Technician(s) _____ Date 9/15/04

10.0 Installation of MCBXA

10.1 Move the MCBXA Corrector Magnet up against the Mounting Ring on the Q3 Magnet, and bolt the MCBXA Corrector Magnet to the Q3 Cold Mass using the 3" Silver Plated Mounting Screw (MA-390247) and torque bolts to 500 in-lbs. per Note 4 of Q3 Cold Mass Welded Assembly (ME-390529). Shim between the Corrector and Flange as necessary.

Technician(s) _____ Date 9/22/04

10.2 Verify Alignment of MCBXA Corrector Magnet as per Q3 Cold Mass Welded Assembly (ME-390529).

Technician(s) _____ Date 9/22/04

Responsible Authority/Physicist _____ Date 10/29/04

10.3 Tack weld bolts and washers for mounting Corrector into place per Q3 Cold Mass Welded Assembly (ME-390529).

Weldor(s) _____ Date 9/29/04

10.4 Attach Non-IP End Bus Crossover Block Assembly (MD-430081) as per Q3 Module Assembly (ME-369900).

Technician(s) _____ Date 9-22-04

10.5 Route MCBXA Corrector Coil Wires as shown in Figure below and per Q3 Cold Mass Welded Assembly (ME-390529).

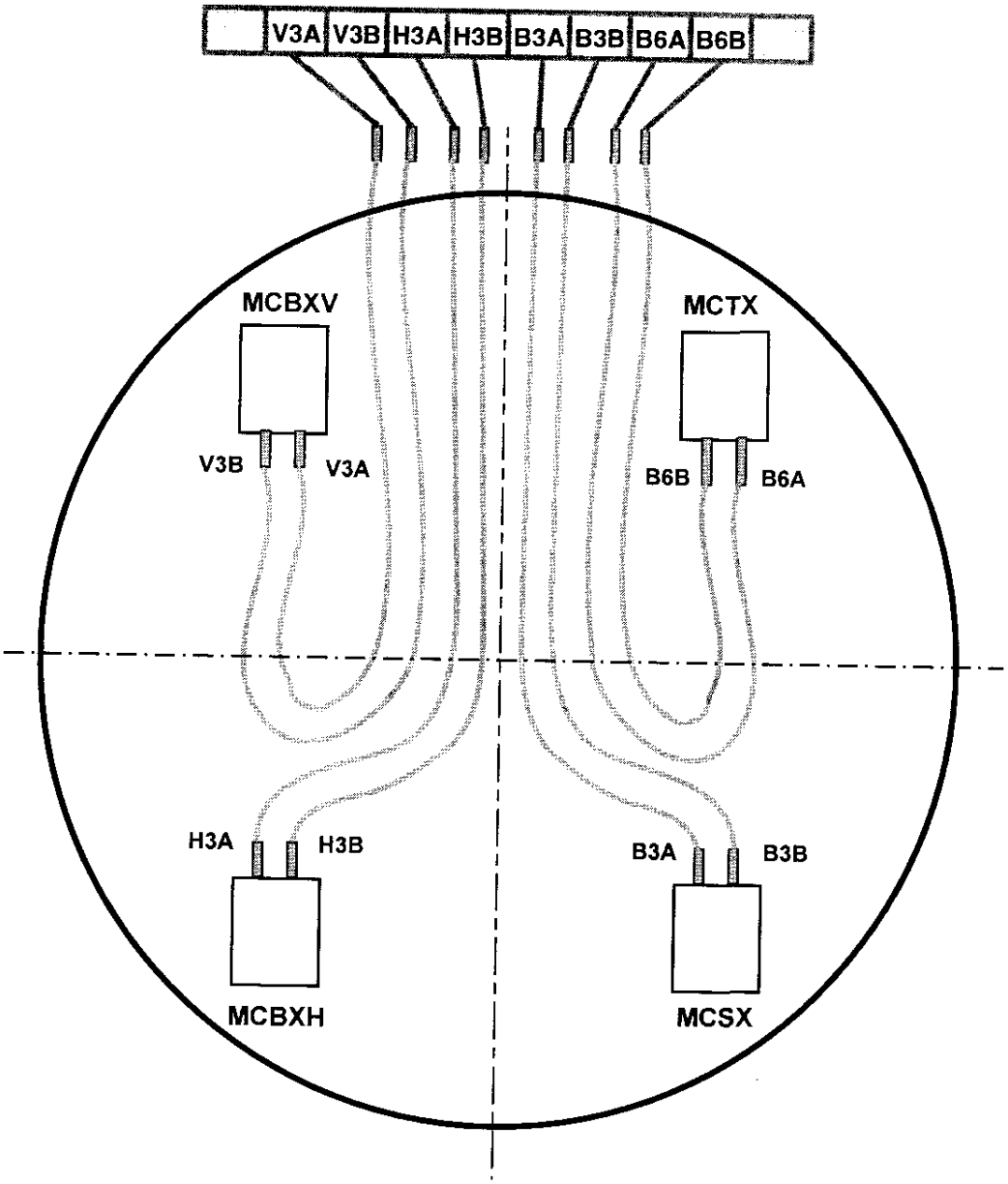

End View of MCBXA for Q3
(in "up" position)

Looking into end of correction coil from DFBX to Q3

Technician(s)

9-23-04
Date

11.0 Installation of MCSOX

11.1 Mount the MCSOX Corrector Magnet to the MCSOX Corrector Mounting Ring (ME-390664).

Technician(s) _____ Date 9/23/04

11.2 Slide the MCSOX Corrector Magnet & MCSOX Corrector Mounting Ring (ME-390664) up to the MCBXA Corrector Magnet.

Technician(s) _____ Date 9/23/04

11.3 Position the MCSOX Corrector Magnet radial (Scribe Line at 0°)

Technician(s) _____ Date 9/23/04

11.4 Position the MCSOX Corrector Magnet longitudinally. (The gap between the MCBXA Magnet and the Mounting Ring should be approximately 15mm.)

Technician(s) _____ Date 9/23/04

11.5 Tack weld MCSOX Corrector Mounting Ring (ME-390664) as per Q3 Cold Mass Welded Assembly (ME-390529).

Weldor(s) _____ Date 9/23/04

11.6 Weld the MCSOX Corrector Mounting Ring (ME-390664) as per Q3 Cold Mass Welded Assembly (ME-390529).

Weldor(s) — Date: 9/22/04

11.7 Wire the MCSOX Corrector Magnet.

Technician(s) — Date: 9-22-04

11.8 Verify alignment of the MCSOX Corrector Magnet.

Technician(s) — Date: 9-22-04

Responsible Authority/Physicist — Date: 9/22/04

11.9 Tack weld the MCSOX Corrector Magnet hardware as per Q3 Cold Mass Welded Assembly (ME-390529).

Weldor(s) — Date: 9/22/04

12.0 Configure MCSOX Corrector Coil Wires

Q3 Wiring System

R. Bossert 6-29-2004

Note: Corrector tap wires are not shown. They will be installed after correction coils are mounted. They are listed below:

MQSX Corrector, MQSX, A+ lead Q3A2 (skew quadrupole) voltage tap EE8223 (VTA2)
MCBXA Corrector, MCBXH, A+ lead Q3H3 (skew dipole) voltage tap EE8123 (VTH3)
MCBXA Corrector, MCBXV, A+ lead Q3V3 (normal dipole) voltage tap EE8113 (VTV3)
MCBXA Corrector, MCSX, A+ lead Q3B3 (normal sextupole) voltage tap EE8313 (VTB3)
MCBXA Corrector, MCTX, A+ lead Q3B6 (normal dodecapole) voltage tap EE8613 (VTB6)
MCSOX Corrector, MCSSX, A+ lead Q3A3 (skew sextupole) voltage tap EE8323 (VTA3)
MCSOX Corrector, MCOSX, A+ lead Q3A4 (skew octupole) voltage tap EE8423 (VTA4)
MCSOX Corrector, MCOX, A+ lead Q3B4 (normal octupole) voltage tap EE8413 (VTB4)

12.1 Attach the MCSOX Splice Plate Mounting Ring (ME-430129), the MCSOX Corrector Splice Face Plate (ME-430130), and the MCSOX Splice Plate Mounting Bars (ME-430128) as per Q3 Module Assembly (ME-369900).

T. Rico — Technician(s) 9-23-04 — Date

12.2 Route wires as shown in figure below and per Q3 Module Assembly (ME-369900).

T. Rico — Technician(s) 9-23-04 — Date

12.3 Solder Wires per Q3 Module Assembly (ME-369900).

T. Rico — Technician(s) 9-24-04 — Date

13.0 Mount MCSOX Bus and Expansion Loop Hardware

13.1 Mount the Side Cable Clamp Assembly (ME-430103) as per Q3 Module Assembly (ME-369900).

Technician(s) _____ Date 9-25-04

13.2 Mount the Non-IP (Non-Lead End) Corrector Bus Bundle Bracket (ME-430134) as per Q3 Module Assembly (ME-369900).

Technician(s) _____ Date 9-25-04

14.0 Assemble Bus and Expansion Loop on Non-IP (Non-Lead) End

14.1 Route Non-IP End cables into crossover assembly on Non-IP End as shown in figure 16.1-A.

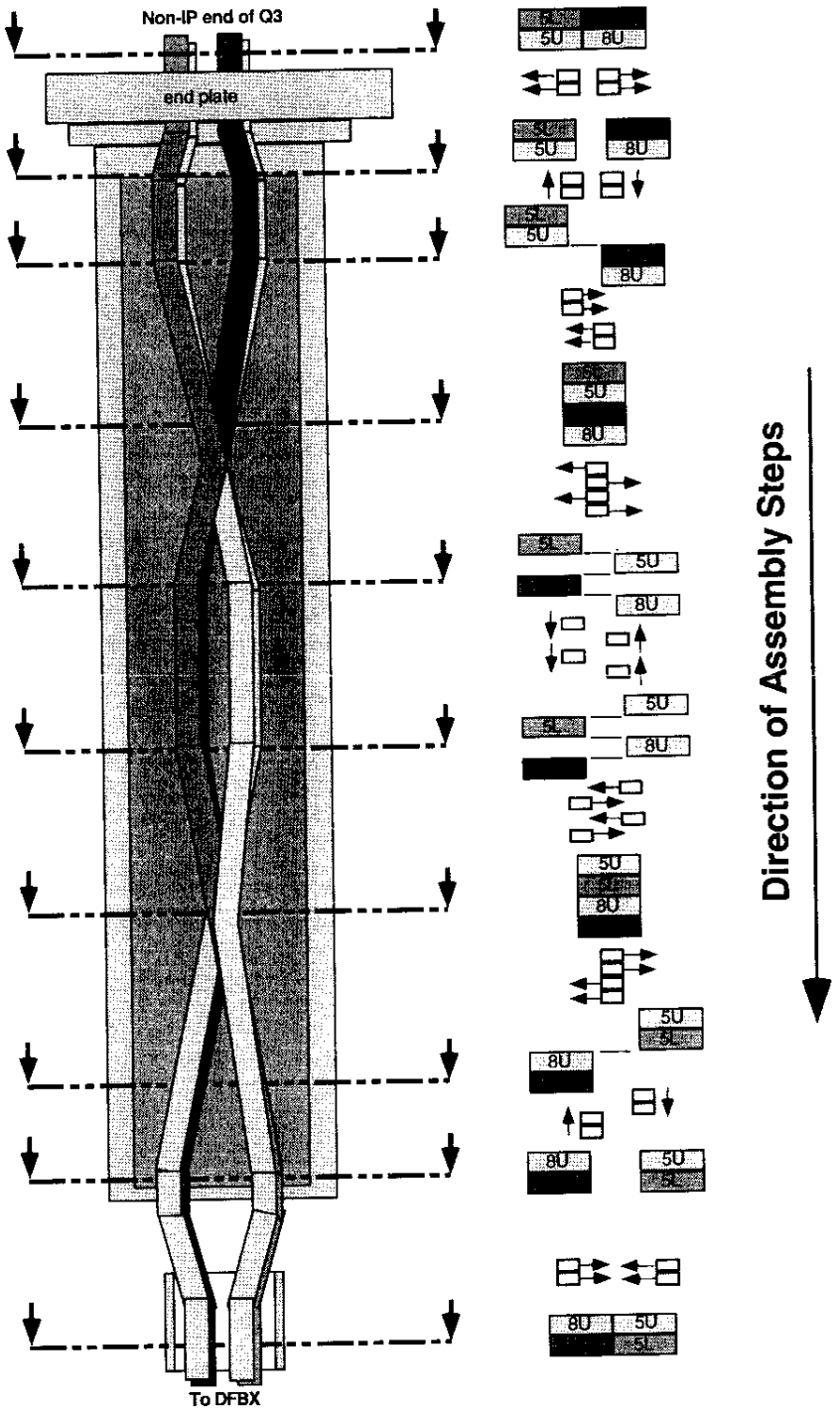

Figure 14.1-A

T. Bice
Technician(s)

9-25-04
Date

Q3 LMQXC Cold Mass Module Assembly

LHC Serial No.: LMQXC01-0
Notes:

14.2 Configure Bus Expansion Loop as per Q3 Module Assembly (ME-369900).

Technician(s) _____ Date 9-25-04

15.0 Electrical Inspection

15.1 Perform an electrical inspection on each of the Individual Quadrants and the Cold Mass. Refer to the Valhalla and Leader Free Standing Coil Measurement Procedure (ES-292306).

To measure the Resistance of a Q3 Cold Mass:

1. Use Valhalla Scientific 4300B digital micro-ohmmeter.
2. Set Test Current to 0.1 amp.
3. Set Scale to 2V full scale.
4. Turn temperature compensation on.
5. Turn test current off.
6. Connect I_{HI} to Q4 inner power lead as shown in figure.
7. Connect I_{LO} to Q3 inner power lead as shown in figure.
8. Turn test current on.
9. Connect V_{HI} and V_{LO} to voltage taps as shown in resistance table.
10. To measure Total with leads, connect V_{HI} to Q4 power lead and V_{LO} to Q3 power lead.
11. Read resistance and record in traveler.

(Q3) Resistance				Nominal 3.35 to 3.45 Ω
Voltage Tap Serial Numbers				Total Resistance
Connect	Fermi	CERN	KEK	
V_{HI}	VTa1Q3	EE1113	a1	3.425 Ω
V_{LO}	VTc1Q3	EE1213	c1	
V_{HI}	VTc1Q3	EE1213	c1	3.426 Ω
V_{LO}	VTb1Q3	EE1313	b1	
V_{HI}	VTa1Q3	EE1113	a1	6.851 Ω
V_{LO}	VTb1Q3	EE1313	b1	

		Total Resistance with Leads
		Nominal 6.75 to 6.85 Ω
V_{HI}	Q4 Power Lead	6.89 Ω
V_{LO}	Q3 Power Lead	

Technician(s) 10-2-04 Date

Check resistance of Redundant Voltage Taps.

Q3 Redundant Voltage Taps				Nominal 3.35 to 3.45 Ω
Connect	Fermi	CERN	KEK	Resistance
V_{HI}	VTa2Q3	EE1123	a2	3.426 Ω
V_{LO}	VTc2Q3	EE1223	c2	
V_{HI}	VTc2Q3	EE1223	c2	3.425 Ω
V_{LO}	VTb2Q3	EE1323	b2	

Technician(s) 10-2-04 Date

To measure Ls and Q of a Q3 Cold Mass:

1. Use Agilent 4263B LCR Meter.
2. Turn power on by pushing line button. Wait 30 seconds until display screen is lit.
3. Recall program #1. To do this, push recall (Rcl), then push #1, then push Enter.
4. Push Auto/Hold button to release hold.
5. Verify that the frequency displayed in the upper right corner of the display screen is 1000 Hz and the level recorded in the lower right corner of the display screen is 1V or 1000 mV.
6. Connect H_{cur} to Quadrant 4 power lead as shown in figure.
7. Connect L_{cur} to Quadrant 3 power lead as shown in figure.
8. Connect H_{pot} and L_{pot} buttons to voltage taps as shown below.

To measure Q3:

- To measure Quadrants 1&4, connect H_{pot} to VTa1 (EE1113 for Q3), and L_{pot} to VTc1 (EE1213 for Q3).
- To measure Quadrants 2&3, connect H_{pot} to VTc1 (EE1213 for Q3), and L_{pot} to VTb1 (EE1313 for Q3).
- To measure total, connect H_{pot} to VTa1 (EE1113 for Q3), and L_{pot} to VTb1 (EE1313 for Q3).

9. Read Ls and Q from display and record in traveler.

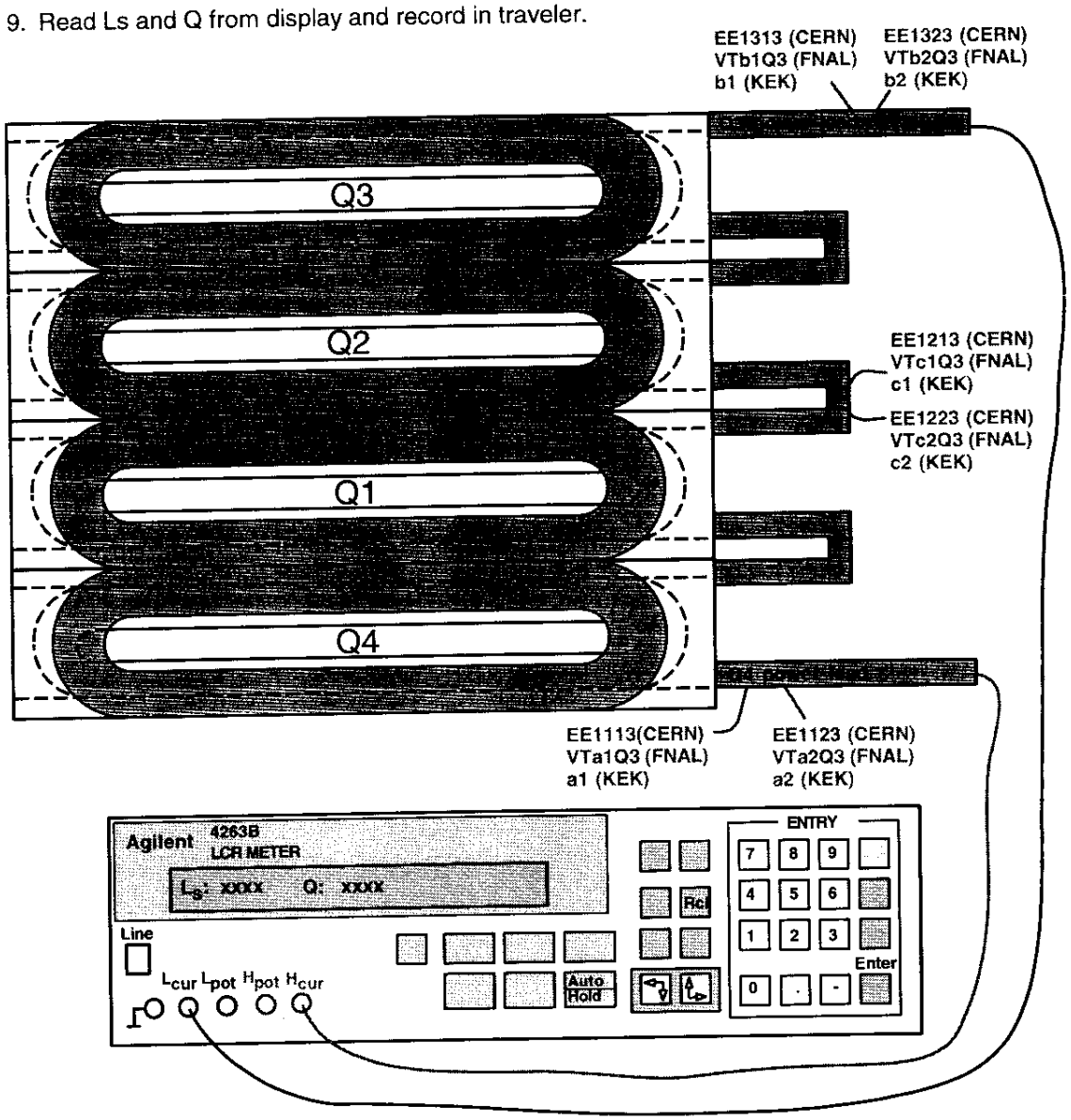

(Q3) Inductance				Nominal 15 to 16 mH
Voltage Tap Serial Numbers				Total Inductance
Connect	Fermi	CERN	KEK	
H_{POT}	VTa1Q3	EE1113	a1	15.179 mH
L_{POT}	VTc1Q3	EE1213	c1	
H_{POT}	VTc1Q3	EE1213	c1	15.191 mH
L_{POT}	VTb1Q3	EE1313	b1	

				Nominal 30 to 32 mH
				Total Inductance
H_{POT}	VTa1Q3	EE1113	a1	30.354 mH
L_{POT}	VTb1Q3	EE1313	b1	

(Q3) Q-Factor				Nominal 1.0 to 1.2
Voltage Tap Serial Numbers				Total Q
Connect	Fermi	CERN	KEK	
H_{POT}	VTa1Q3	EE1113	a1	1.1
L_{POT}	VTc1Q3	EE1213	c1	
H_{POT}	VTc1Q3	EE1213	c1	1.1
L_{POT}	VTb1Q3	EE1313	b1	

				Nominal 1.0 to 1.2
				Total Inductance
H_{POT}	VTa1Q3	EE1113	a1	1.1
L_{POT}	VTb1Q3	EE1313	b1	

Technician(s)

10.2.04
Date

To measure the resistance of a Thermometer (RTD):

1. Use Hewlett Packard HP3457A digital multimeter.
2. Record temperature of building within +/- 5 degrees.
3. Press line button to turn line on.
4. Connect wires as shown in Figure below.
   U+ (Black) to Sense HI
   I+ (Yellow) to Input HI
   U- (Red) to Sense LO
   I- (Green) to Input LO
5. Push blue button (function key) once.
6. Push OHMF button.
7. Verify arrow in readout is above the 4WΩ (meaning a 4 wire resistance measurement).
8. Read resistance in ohms and record in traveler.

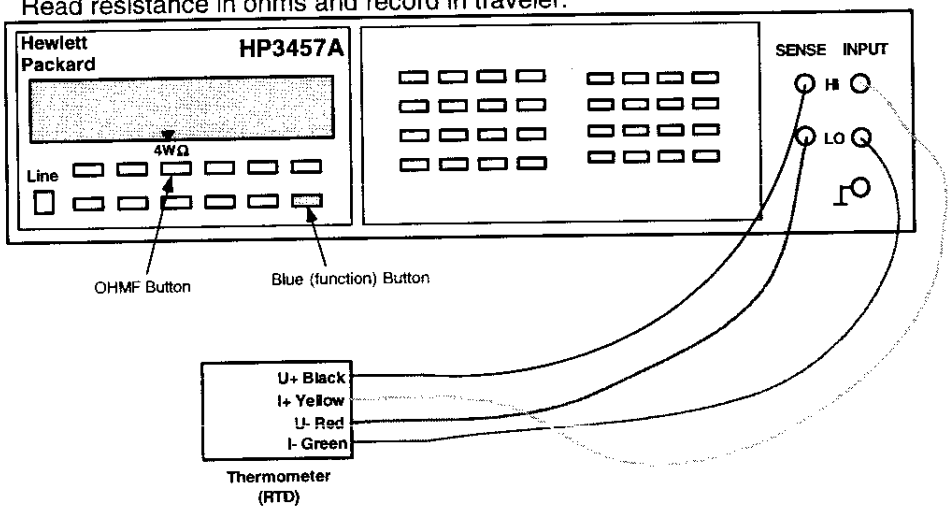

To measure the resistance of a Cryogenic (Warm-up) Heater

1. Use Hewlett Packard HP3457A digital multimeter.
2. Record temperature of building within +/- 5 degrees.
3. Press line button to turn line on.
4. Connect wires as shown in Figure below.
5. Push blue button (function key) once.
6. Push OHMF button.
7. Verify arrow in readout is above the 4WΩ (meaning a 4 wire resistance measurement).
   Note: Although this is technically a 4 wire measurement, it is effectively a 2 wire measurement, since there are only 2 wires connected to each heater.
8. Read resistance in ohms and record in traveler.

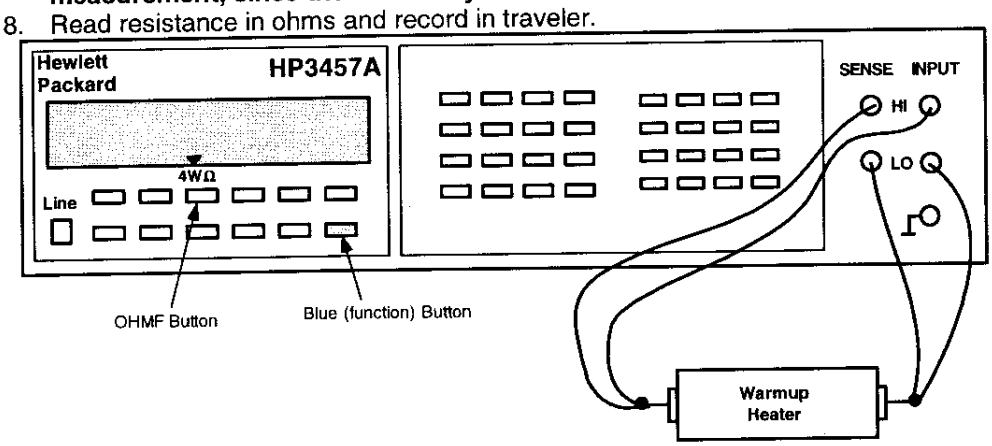

Q3 - RTD's and Cryogenic (warm-up) Heaters				
Temperature of Building (± 5°): _____				
Component	Fermi	CERN	Range	Resistance
Q3 RTD, primary	TaQ3	TT8313	60 to 70 Ω	72.741 Ω
Q3 RTD, redundant	TbQ3	TT8323	60 to 70 Ω	67.25 Ω
Q3 Cryogenic (warm-up) Heater (LE) - wire at top (CERN #1 I+)	W1aQ3	EH8313+	16 to 18.5 Ω	16.585 Ω
Q3 Cryogenic (warm-up) Heater (LE) - wire at bottom (CERN #1 I-)	W2aQ3	EH8313-		
Q3 Cryogenic (warm-up) Heater (Non-LE) - wire at top (CERN #2 I+)	W1bQ3	EH8323+	16 to 18.5 Ω	16.191 Ω
Q3 Cryogenic (warm-up) Heater (Non-LE) - wire at bottom (CERN #2 I-)	W2bQ3	EH8323-		

Technician(s) _____ Date 10.2.04

Using the Hewlett Packard HP3457A digital multimeter, measure the Protection (Strip) Heater Resistance for Q3.

Q3 Protection (Strip) Heater Resistance					
Fermi	CERN	KEK	Description	Limit	Resistance
H1aQ3	YT1113+	HA1	Circuit A	28 to 32 Ω	30.278 Ω
H2aQ3	YT1113-	HA2			
H1bQ3	YT1123+	HB1	Circuit B	28 to 32 Ω	30.280 Ω
H2bQ3	YT1123-	HB2			

Technician(s) _____ Date 10.2.04

see ATTACHED

15.2 Using the HP4284A, connect power thru the corrector Power Leads (H1B and H1A to measure Q1-H1 or V1B and V1A to measure Q1-V1). Connect the Sense Leads as shown in table below and record resistance.

MCBXA Corrector Coil Taps				
Component	FermiLab Label	CERN Label	Range	Resistance
Q3 - H3	VTH3	EE8123	_____ Ω	Ω
	H3B	N/A		
Q3 - V3	VTV3	EE8113	_____ Ω	Ω
	V3B	N/A		
Q3 - V3	VTB3	EE8313	_____ Ω	Ω
	B3B	N/A		
Q3 - B6	VTB6	EE8613	_____ Ω	Ω
	B6B	N/A		

Technician(s) _____ Date _____

MQSX Corrector Coil Taps				
Component	FermiLab Label	CERN Label	Range	Resistance
Q3 - A2	VTA2	EE8223	_____ Ω	Ω
	A2B	N/A		

Technician(s) _____ Date _____

MCSOX Corrector Coil Taps				
Component	FermiLab Label	CERN Label	Range	Resistance
Q3 - A3	VTA3	EE8323	_____ Ω	Ω
	A3B	N/A		
Q3 - A4	VTA4	EE8423	_____ Ω	Ω
	A4B	N/A		
Q3 - B4	VTB4	EE8413	_____ Ω	Ω
	B4B	N/A		

Technician(s) _____ Date _____

16.0 Dome Setup

16.1 Attach IP End Dome (MD-390221) (Q3) to the End Dome Positioning Fixture (MD-369776).

Technician(s) _____ Date 9-29-04

16.2 Align IP End Dome (MD-390221) as shown in Q3 Cold Mass Welded Assembly (ME-390529).

Technician(s) _____ Date 9-29-04

16.3 Level the IP End Dome (MD-390221) using the Ball Socket (MD-369777) and the Mini Level.

Technician(s) _____ Date 9-29-04

16.4 Mark the IP End Dome (MD-390221) and the End Plate with a Horizontal Witness Line. This Step will be used in Step 13.3 to reposition the Domes prior to Welding.

Technician(s) _____ Date 9-29-04

16.5 Remove the IP End Dome (MD-390221) from the Tooling.

Technician(s) _____ Date 9-29-04

16.6 Attach Non-IP End Dome (MD- 390668) (Q3) to the End Dome Positioning Fixture (MD-369776).

Technician(s) _____ Date 9-24-04

16.7 Align Non-IP End Dome (MD- 390668) as shown in Q3 Cold Mass Welded Assembly (ME-390529).

Technician(s) _____ Date 9-24-04

16.8 Level the Non-IP End Dome (MD- 390668) using the Ball Socket (MD-369777) and the Mini Level.

Technician(s) _____ Date 9-24-04

16.9 Feed the Electrical wires/bus through the proper ports as the Non-IP End Dome (MD- 390668) is brought into position against the End Plate.

Technician(s) _____ Date 9-24-04

16.10 Mark the Non-IP End Dome (MD- 390668) and the End Plate with a Horizontal Witness Line. This Step will be used in Step 13.6 to reposition the Domes prior to Welding.

Technician(s) _____ Date 9-24-04

16.11 Remove the Non-IP End Dome (MD- 390668) from the Tooling.

Technician(s) _____ Date 9-24-04

16.12 Perform preliminary reference measurements before moving the Coldmass to an Assembly Table.

Responsible Authority/Physicist _____ Date 9-24-04

16.13 Move the Coldmass to an Assembly Table.

Technician(s) _____ Date 9-24-04

17.0 Beam Tube Insertion

TRR# 1682

17.1 Inspect the Beam Tube (MC-~~369552~~ 522) for damage. Clean Beam Tube using lint free Heavy Duty Wipers (Fermi stock 1660-0150) and Isopropyl Alcohol (Fermi stock 1920-0300) as per Insulated Beam Tube Assembly for Q3 (MD-369838).

Technician(s) _____ Date 9-29-04

17.2 Using Insertion Tooling, insert the Beam Tube (MC-369552) into the Magnet Assembly as per Beam Tube Insertion Tooling (MD-369789).

Technician(s) _____ Date 9-29-04

17.3 Position the Beam Tube (MC-369552) longitudinally per Q3 Cold Mass Welded Assembly (ME-390529).

Technician(s) _____ Date 9-29-04

17.4 Place a mark 45mm from the kapton insulation on IP End of the Beam Tube. NON

Technician(s) _____ Date 9-29-04

17.5 Verify that the placement of the mark in Step 17.4 is correct.

Crew Chief _____ Date 9/29/04

TRR# 1682

17.6 Using the Wachs Cutter, cut the IP End of the Beam Tube at the mark. NON

Technician(s) _____ Date 9-29-04

17.7 Measure the inside Beam Tube length and record this measurement below.

Step	Description	Measurement
17.7.1	Beam Tube Length	8890
	Subtract 8650mm (±2mm)	- 8650mm
17.7.2	(Length to be cut from ~~Bem~~-IP End)	= 240

Technician(s) _____ Date 9-29-04

17.8 Using the number recorded in Step 17.7.2, measure and place a mark at the Non-IP End of the Beam Tube.

Technician(s) — Date: 9-29-04

17.9 Verify that the placement of the mark in Step 17.8 is correct.

Crew Chief — Date: 9/29/04

17.10 Using the Wachs Cutter, cut the Non-IP End of the Beam Tube at the mark.

Technician(s) — Date: 9-30-04

17.11 Measure and verify Beam Tube length is 8650 (±2mm). Record Actual Beam Tube Length below.

Actual Beam Tube Length	8649

Technician(s) — Date: 9-30-04

Responsible Authority/Physicist — Date: 9/30/04

XXX 17.12 Hipot the Beam Tube to coil, heaters and ground. (5kV) (Max. Leakage < 0.5μA)

STOP

Have Crew Chief verify setup and sign below before continuing.

Crew Chief — Date: 10/2/04

Hipot	Leakage or Failure Voltage	Pass	Fail
Beam Tube to coil, heaters and ground	.081 μA	✓	

Technician(s) — Date: 10-2-04

Responsible Authority/Physicist — Date: 10/2/04

18.0 Dome Installation

18.1 Tack weld the corrector mounting hardware in place as per Q3 Cold Mass Welded Assembly (ME-390529).

Weldor(s) Date 10/7/04

18.2 Mount and adjust the Shipping restraint screws.

Note(s):
Weld to corrector if necessary.

Technician(s) Date 10-8-04

18.3 Reposition the IP End Dome as shown in Q3 Cold Mass Welded Assembly (ME-390529) using the Horizontal Witness Line from step 11.4.

Technician(s) Date 10-8-04

18.4 Tack weld the IP End Dome in place at approximately 6-8 places around the Dome per Q3 Cold Mass Welded Assembly (ME-390529).

Weldor(s) Date 10/7/04

18.5 Weld the IP End Dome, skip weld around to minimize distortion per Q3 Cold Mass Welded Assembly (ME-390529).

Weldor(s) Date 10/11/04

18.6 Reposition the Non-IP End Dome as shown in Q3 Cold Mass Welded Assembly (ME-390529) using the Horizontal Witness Line from step 11.10.

Technician(s) _____ Date 10-8-04

18.7 Feed the Electrical wires/Bus through the proper ports as the Non-IP End Dome is brought into position against the End Plate.

Technician(s) _____ Date 10-8-04

18.8 Ensure Spider Assemby (MB-430096) is installed properly as per Q3 Module Assembly (ME-369900).

Crew Chief _____ Date 10-8-04

18.9 Tack weld the Non-IP End Dome in place at approximately 6-8 places around the Dome as per Q3 Cold Mass Welded Assembly (ME-390529).

Weldor(s) _____ Date 10/7/04

18.10 Weld the Non-IP End Dome, skip weld around to minimize distortion as per Q3 Cold Mass Welded Assembly (ME-390529).

Weldor(s) _____ Date 10/9/04

TACK WELD / WELD EXTENSION TO COLD MASS

TR NEEDED 1682

19.0 Suspension System Assembly

19.1 Clean the Suspension System with Ethyl Alcohol (Fermi stock 1920-0550) and Kimwipes (Fermi stock 1660-2500) or equivalent.

Part Name	Part Number	Quantity	Completed
Fixed Support Assembly	**(ME-390041)**	**1**	✓
Sliding Support Assembly	**(ME-390042)**	**1**	✓
Tie Bar Assembly	**(ME-390400)**	**2**	✓
Tie Bar Shim, 6.4mm (.250")	**(ME-390118)**	**4**	
Tie Bar Shim, 2.4mm (.093")	**(ME-390119)**	**4**	✓
Tie Bar Shim, 0.8mm (.031")	**(ME-390120)**	**4**	✓
Suspension System Adjusting Screw	**(MB-390039)**	**8**	✓
M16 x 70mm SHCS	**(MA-393021)**	**8**	✓
Washer (.656" ID x 1.38" OD x .13" THK STN STEEL)	**(MA-390377)**	**8**	✓

Label the IP End and the Non-IP End of the Vacuum Vessel with a temporary sticker or equivalent.

O. Trivino
Technician(s)

10-02-04
Date

19.2 Insert the Fixed Support Assembly (ME-390041) into the Vacuum Vessel and position at the Non-IP End.

O. Trivino
Technician(s)

10-02-04
Date

19.3 Install the Suspension System Adjusting Screws (MB-390039) and Washer (MA-390377) into the Vacuum Vessel to hold the Fixed Support Assembly in place. Coat all screw threads with Molybdenum Disulfide prior to installation.

[redacted]

Technician(s) _____ Date 10-2-04

19.4 Adjust the Vertical and rotational alignment of the Supports using the Suspension System Adjusting Screws (MB-390039). Ensure all four screws are in contact with the Support and that Diametrically Opposing Support Lugs are equidistant from the Vacuum Vessel Wall.

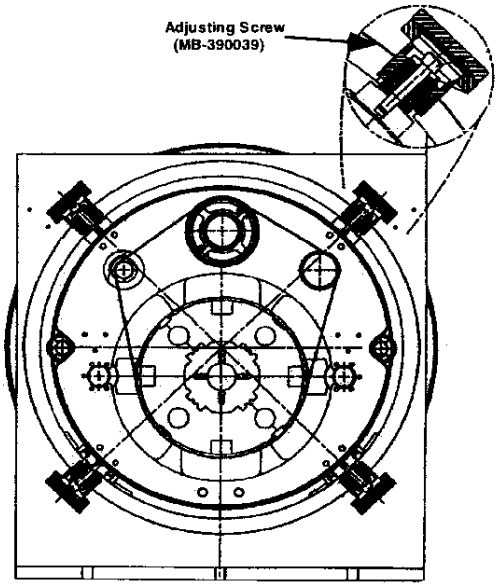

Technician(s) _____ Date 10-02-04

19.5 Insert the Sliding Support Assembly (ME-390042) in to the Vacuum Vessel and position at the IP End.

Technician(s) _____ Date 10-02-04

19.6 Install the Suspension System Adjusting Screws (MB-390039) and Washer (MA-390377) into the Vacuum Vessel to hold the Fixed Support Assembly in place. Coat all screw threads with Molybdenum disulfide prior to installation.

Technician(s) _____ Date 10-02-04

19.7 Adjust the Vertical and rotational alignment of the Supports using the Suspension System Adjusting Screws (MB-390039). Ensure all four screws are in contact with the Support and that Diametrically Opposing Support Lugs are equidistant from the Vacuum Vessel Wall.

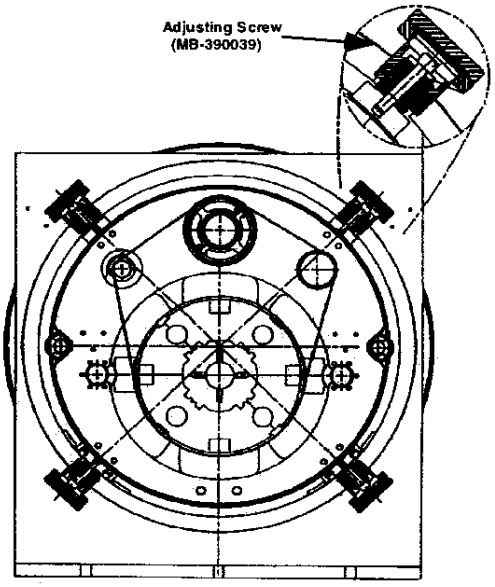

Technician(s) _____ Date 10-02-04

19.8 Assemble the Suspension System using the Fixed Support Assembly (ME-390041), the Sliding Support Assemblies (ME-390042) and the Tie Bar Assemblies (MC-390167). Insert Tie Bar Shims (MC-390118), (MB-390119) and (MB-390120) between the Sliding Support Assemblies (ME-390042) and the Tie Bar Assemblies (MC-390400) as required.
(Reference drawing: ME-390525).

O. Friangi — Technician(s) 10-02-04 — Date

19.9 Measure the distance between the Suspension Rings at the bottom of the Threaded Rods. Install Threaded Rods after measurements.

Non-IP North to IP North DN ~~79.046875~~ 164 3/4

Non-IP South to IP South DN ~~79.109375~~ 164 3/4

Technician(s) 10-8-04 — Date

19.10 Measure from the face of the IP end vacuum vessel flange to the inside surface of the IP end suspension system.

Record measurement here: WEST 79.046875 F 2008

Technician(s) 10-08-04 — Date

19.11 Measure from the face of the Non-IP end vacuum vessel flange to the inside surface of the Non-IP end suspension system.

Record measurement here: EAST 79.109375 2009 mm

Technician(s) 10-08-04 — Date

19.12 Label the IP End Support and the Non-IP End Support.
(Writing on the G-11 Support is acceptable).

Technician(s) 10-08-04 — Date

19.13 Loosen each Suspension System Adjusting Screw (MB-390039) 1/2 turn and remove the Suspension System from the Vacuum Vessel.

Technician(s) 10-08-04 — Date

19.14 Configure the Suspension Tooling for Q3 Assembly per Cryostat Layout Tooling & Assembly (ME-364604). Place Suspension Assembly on the tooling and make necessary adjustments to the tooling.

Technician(s) 10-8-04 — Date

19.15 Assemble the Suspension Mounting Brackets (MD-390279) to the Support Assemblies.

Technician(s) _____ Date 10-11-04

19.16 Slide the Suspension System over the Cold Mass and place on tooling. The Suspension system may be disassembled during this step. Record shim sizes and locations prior to disassembly.

Note(s):

Ensure that the Suspension System is configured properly to the Cold Mass with respect to the IP and Non-IP Ends.

Technician(s) _____ Date 10/11/04

TR 1682

19.17 Verify locking collars exist only at ~~Non~~-IP End support.

Lead Person _____ Date 10-11-04

19.18 Establish alignment between the Cold Mass and the Support system. Install shims between the Brass Slide Bars and the Stainless Steel Blocks on each support as needed.

Record Shim size and location below.

TRR 1682

East-North	.065	**East South**	.065
~~**Center-North**~~		~~**Center-South**~~	
West-North	.065	**West-South**	.065

Technician(s) _____ Date 10/11/04

19.19 Verify the Alignment of the Cold Mass and the Support System.

Crew Chief _____ Date 10/12/04

19.20 Weld the Cold Mass to the Outboard Cold Mass Brackets (MB-430082) as per Q3 Module Assembly (ME-390900).

TRR# 1682

Weldor(s) William E. Gartuld Date 10-12-04

Remove STEP

19.21 Weld the Shielding Blocks (MB-390534) to the Cold Mass per Q3 Suspension System Installation (ME-390525).

Weldor(s) _____ Date _____

19.22 Add 112.5 mm to the number recorded in Step 19.10 and record below.

Recorded measurement from Step 19.10: 2009

Add: + 112.5 **mm**

Record New Total: 2121.5

Technician(s) Date 10/12/04

19.23 Add 337.5 mm to the number recorded in Step 19.11 and record below.

Recorded Measurement from Step 19.11: 2008

Add: + 337.5 **mm**

Record New Total: 2345.5

Technician(s) Date 10-12-04

19.24 Position the IP End of the Beam Tube at the distance recorded in Step 19.22 from the inside surface of the IPG-10 support.

Technician(s) Date 10-12-04

19.25 Measure the Non-IP End of the Beam Tube from the inside surface of the Non-IP End support. Compare this number to the number recorded in Step 19.23.

Note(s):

These numbers should be the same to within 1 mm. If these numbers differ greater than 1 mm, contact Responsible Authority/Physicist.

Record measurement here: 2345.5

Recorded measurement from Step 19.23: 2345.5

Technician(s) Date 10-12-04

19.26 Measure from the IP End of the Beam Tube to the Spot Face on the IP End Dome. Record below.

Record measurement here: 20 mm

Technician(s) Date 10-12-04

19.27 Subtract 15mm from the number recorded in Step 19.26. This is the Spacer width for the IP End. Record below.

Recorded Measurement from Step 19.26: 20mm

Subtract: **- 15mm**

Spacer width for the IP End: 5 mm

Technician(s) Date 10/12-05

19.28 Measure from the Non-IP End of the Beam Tube to the Spot Face on the Non-IP End Dome. Record below.

Record measurement here: 20

Technician(s) Date 10.12.05

19.29 Subtract 15mm from the number recorded in Step 19.26. This is the Spacer width for the Non-IP End. Record below.

Recorded Measurement from Step 19.28: 20

Subtract: **- 15mm**

Spacer width for the Non-IP End: 5

Technician(s) Date 10.12-05

20.0 Cold Bore

20.1 Flare both ends of the Beam Tube using Flaring Tool (MC-390416) per Q3 Cold Mass Welded Assembly (ME-390529).

Technician(s) _____ Date 10-12-04

20.2 Add Spacer between Beam Tube Flange and IP End Dome, if necessary.

Spacer Added? **Yes** ☑ **No** ☐

Technician(s) _____ Date 10-12-04

20.3 Position Beam Tube Flange (MC-390538) over the Beam Tube and onto IP End Dome per Q3 Cold Mass Welded Assembly (ME-390529).

Technician(s) _____ Date 10-12-04

20.4 Weld the Beam Tube to the Flange at IP End as per Q3 Cold Mass Welded Assembly (ME-390529).

Weldor(s) William E. Gatfield Date 10-12-04

20.5 Position the Beam Tube Flange (MC-390538) over the Beam Tube and onto the Non-IP End Dome (Q3) per Q3 Cold Mass Welded Assembly (ME-390529).

Technician(s) _____ Date 10-12-04

20.6 Weld Beam Tube to Flange at Non-IP End as per Q3 Cold Mass Welded Assembly (ME-390529).

Weldor(s) William E. Gatfield Date 10-12-04

TRR# 1695

20.7 Perform a stretched wire measurement of the system to align the ~~Cold Mass~~ BEAM TUBE FLANGE within ± ~~2 mR~~ 1/2 mm

Responsible Authority/Physicist T. Pm Date 10/12/04

20.8 Align Beam Tube and the Flange at IP End per Q3 Cold Mass Welded Assembly (ME-390529).

Technician(s) _____ Date 10-13-04

20.9 Weld the Flange to the IP End Dome as per Q3 Cold Mass Welded Assembly (ME-390529).

Weldor(s) _____ Date 10-13-04

20.10 Align Beam Tube and Flange at NON-IP End per Q3 Cold Mass Welded Assembly (ME-390529).

Technician(s) _____ Date 10-13-04

20.11 Weld the Flange to the Non-IP End Dome as per Q3 Cold Mass Welded Assembly (ME-390529).

Weldor(s) _____ Date 10-13-04

21.0 Electrical Inspection

21.1 Perform an electrical inspection on each of the Individual Quadrants and the Cold Mass. Refer to the Valhalla and Leader Free Standing Coil Measurement Procedure (ES-292306).

To measure the Resistance of a Q3 Cold Mass:

1. Use Valhalla Scientific 4300B digital micro-ohmmeter.
2. Set Test Current to 0.1 amp.
3. Set Scale to 2V full scale.
4. Turn temperature compensation on.
5. Turn test current off.
6. Connect I_{HI} to Q4 inner power lead as shown in figure.
7. Connect I_{LO} to Q3 inner power lead as shown in figure.
8. Turn test current on.
9. Connect V_{HI} and V_{LO} to voltage taps as shown in resistance table.
10. To measure Total with leads, connect V_{HI} to Q4 power lead and V_{LO} to Q3 power lead.
11. Read resistance and record in traveler.

(Q3) Resistance				Nominal 3.35 to 3.45 Ω
Voltage Tap Serial Numbers				Total Resistance
Connect	Fermi	CERN	KEK	
V_{HI}	VTa1Q3	EE1113	a1	3.426 Ω
V_{LO}	VTc1Q3	EE1213	c1	
V_{HI}	VTc1Q3	EE1213	c1	3.426 Ω
V_{LO}	VTb1Q3	EE1313	b1	
V_{HI}	VTa1Q3	EE1113	a1	6.851 Ω
V_{LO}	VTb1Q3	EE1313	b1	

This will always be shorted for measurement R

		Total Resistance with Leads
		Nominal 6.75 to 6.85
V_{HI}	Q4 Power Lead	6.89 Ω
V_{LO}	Q3 Power Lead	

Technician(s) 10-11-04 Date

Check resistance of Redundant Voltage Taps.

Q3 Redundant Voltage Taps				Nominal 3.35 to 3.45 Ω
Connect	Fermi	CERN	KEK	Resistance
V_{HI}	VTa2Q3	EE1123	a2	3.426 Ω
V_{LO}	VTc2Q3	EE1223	c2	
V_{HI}	VTc2Q3	EE1223	c2	3.425 Ω
V_{LO}	VTb2Q3	EE1323	b2	

Technician(s) 10-11-04 Date

To measure Ls and Q of a Q3 Cold Mass:

1. Use Hewlett Packard HP4284A digital LCR meter.
2. Turn line switch to on. The words "Measurement Display" should now be highlighted in the upper left corner of the display screen.
3. Use cursor buttons (shown in figure with arrows) to toggle down until "function" is highlighted near the upper left corner of the display screen.
4. Push the lowest of the five buttons to the right of display 3 times. (this button is shaded gray in the figure) The line in the display screen next to the second button down should now read "Ls-Q" and "function" near the upper left corner of the display should have the option "Ls-Q" chosen.
5. Scroll to "integer" using the cursor buttons. "Integer" will have the option "medium" chosen.
6. Press the 3rd button of five. The word "medium" should change to "long".
7. Connect H_{cur} to Q4 power lead as shown in figure.
8. Connect L_{cur} to Q3 power lead as shown in figure.
9. Connect H_{pot} and L_{pot} to voltage taps as shown in table.
10. Read Ls and Q from display and record in traveler.

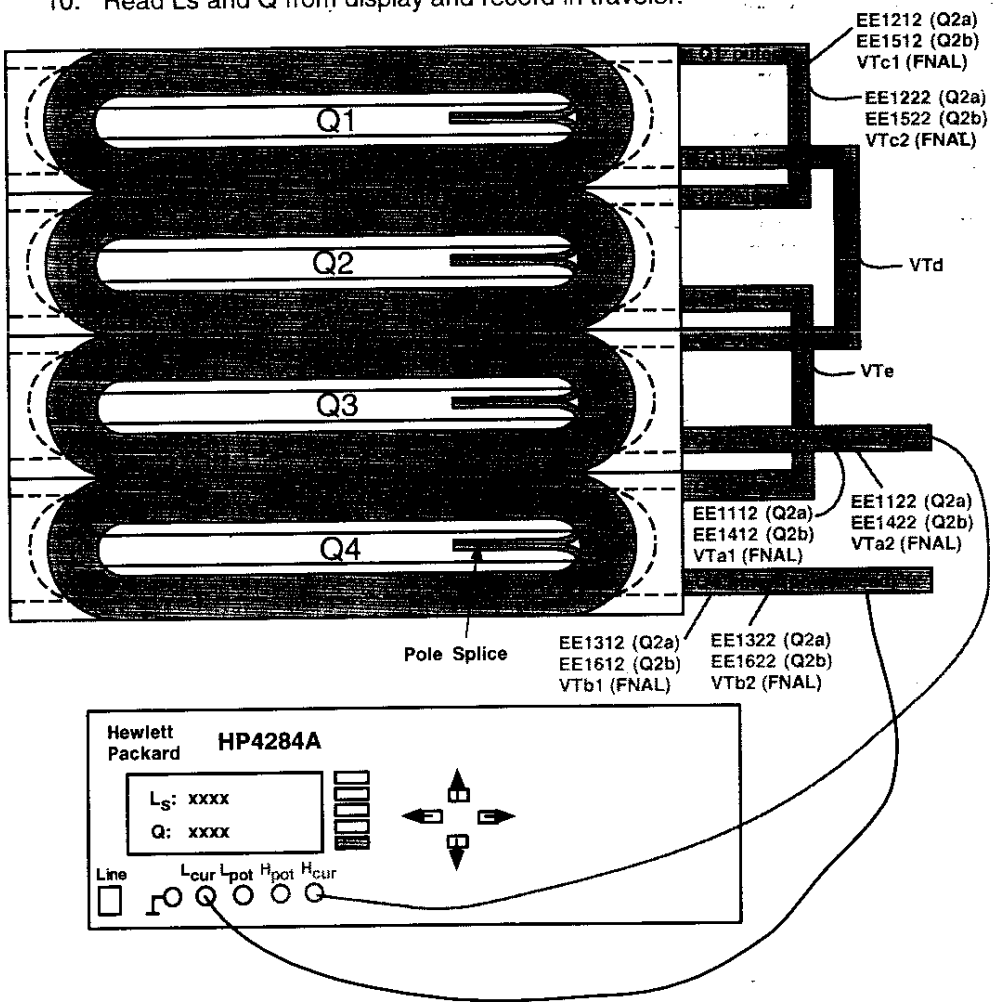

(Q3) Inductance				Nominal 15 to 16 mH
Voltage Tap Serial Numbers				Total Inductance
Connect	Fermi	CERN	KEK	
H_{POT}	VTa1Q3	EE1113	a1	15.179 mH
L_{POT}	VTc1Q3	EE1213	c1	
H_{POT}	VTc1Q3	EE1213	c1	15.192 mH
L_{POT}	VTb1Q3	EE1313	b1	

				Nominal 30 to 32 mH
				Total Inductance
H_{POT}	VTa1Q3	EE1113	a1	30.354 mH
L_{POT}	VTb1Q3	EE1313	b1	

(Q3) Q-Factor				Nominal 1.0 to 1.2
Voltage Tap Serial Numbers				Total Q
Connect	Fermi	CERN	KEK	
H_{POT}	VTa1Q3	EE1113	a1	1.1
L_{POT}	VTc1Q3	EE1213	c1	
H_{POT}	VTc1Q3	EE1213	c1	1.1
L_{POT}	VTb1Q3	EE1313	b1	

				Nominal 1.0 to 1.2
				Total Q
H_{POT}	VTa1Q3	EE1113	a1	1.1
L_{POT}	VTb1Q3	EE1313	b1	

Technician(s)

10-11-04
Date

To measure the resistance of a Thermometer (RTD):

1. Use Hewlett Packard HP3457A digital multimeter.
2. Record temperature of building within +/- 5 degrees.
3. Press line button to turn line on.
4. Connect wires as shown in Figure below.
   U+ (Black) to Sense HI
   I+ (Yellow) to Input HI
   U- (Red) to Sense LO
   I- (Green) to Input LO
5. Push blue button (function key) once.
6. Push OHMF button.
7. Verify arrow in readout is above the 4WΩ (meaning a 4 wire resistance measurement).
8. Read resistance in ohms and record in traveler.

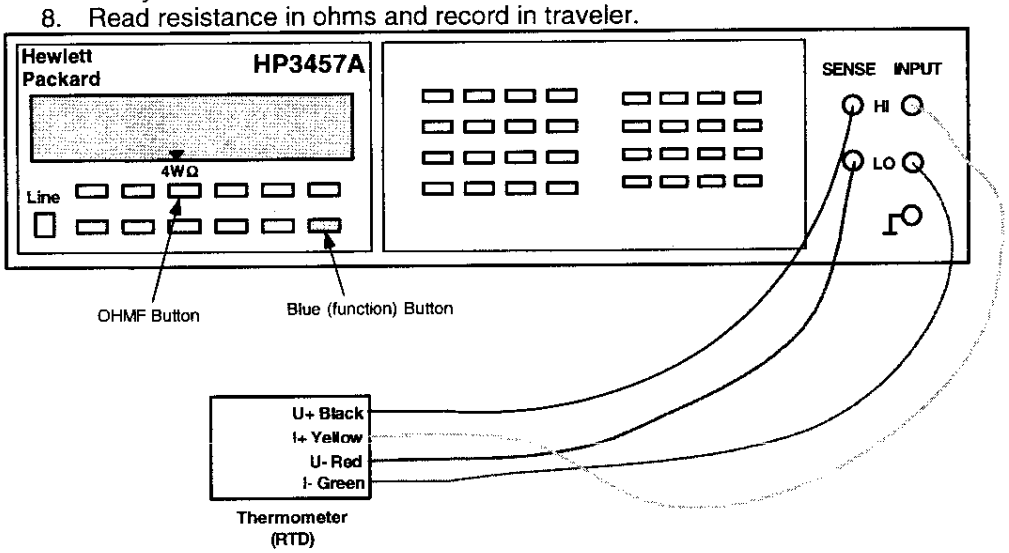

To measure the resistance of a Cryogenic (Warm-up) Heater

1. Use Hewlett Packard HP3457A digital multimeter.
2. Record temperature of building within +/- 5 degrees.
3. Press line button to turn line on.
4. Connect wires as shown in Figure below.
5. Push blue button (function key) once.
6. Push OHMF button.
7. Verify arrow in readout is above the 4WΩ (meaning a 4 wire resistance measurement).
   Note: Although this is technically a 4 wire measurement, it is effectively a 2 wire measurement, since there are only 2 wires connected to each heater.
8. Read resistance in ohms and record in traveler.

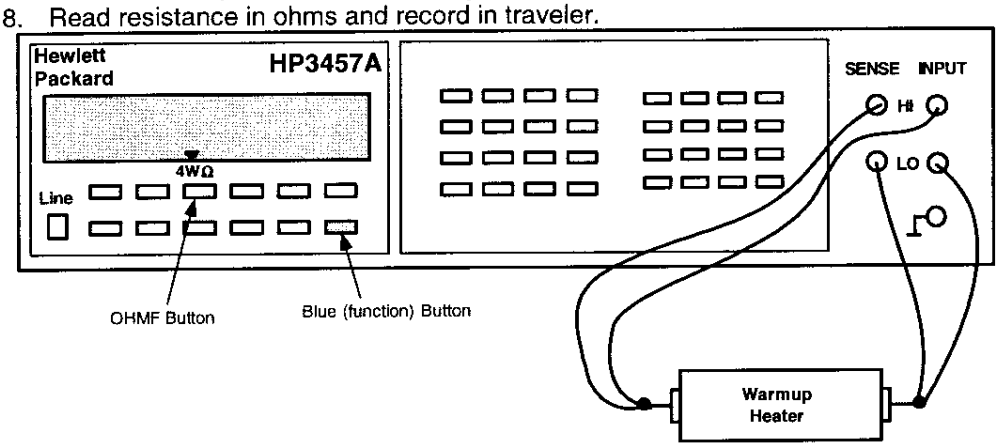

Q3 - RTD's and Cryogenic (warm-up) Heaters				
Temperature of Building (± 5°): _____				
Component	Fermi	CERN	Range	Resistance
Q3 RTD, primary	TaQ3	TT8313	60 to 70 Ω	72.791 Ω
Q3 RTD, redundant	TbQ3	TT8323	60 to 70 Ω	67.23 Ω
Q3 Cryogenic (warm-up) Heater (LE) - wire at top (CERN #1 I+)	W1aQ3	EH8313+	16 to 18.5 Ω	16.385 Ω
Q3 Cryogenic (warm-up) Heater (LE) - wire at bottom (CERN #1 I-)	W2aQ3	EH8313-		
Q3 Cryogenic (warm-up) Heater (Non-LE) - wire at top (CERN #2 I+)	W1bQ3	EH8323+	16 to 18.5 Ω	16.191 Ω
Q3 Cryogenic (warm-up) Heater (Non-LE) - wire at bottom (CERN #2 I-)	W2bQ3	EH8323-		

Technician(s) _____ Date 10-11-04

Using the Hewlett Packard HP3457A digital multimeter, measure the Protection (Strip) Heater Resistance for Q3.

Q3 Protection (Strip) Heater Resistance					
Fermi	CERN	KEK	Description	Limit	Resistance
H1aQ3	YT1113+	HA1	Circuit A	28 to 32 Ω	30.278 Ω
H2aQ3	YT1113-	HA2			
H1bQ3	YT1123+	HB1	Circuit B	28 to 32 Ω	30.280 Ω
H2bQ3	YT1123-	HB2			

Technician(s) _____ Date 10-11-04

SEE ATTACHED

2.12 Using the HP4284A, connect power thru the corrector Power Leads (H1B and H1A to measure Q1-H1 or V1B and V1A to measure Q1-V1). Connect the Sense Leads as shown in table below and record resistance.

MCBXA Corrector Coil Taps				
Component	FermiLab Label	CERN Label	Range	Resistance
Q3 - H3	VTH3	EE8123	_____ Ω	Ω
	H3B	N/A		
Q3 - V3	VTV3	EE8113	_____ Ω	Ω
	V3B	N/A		
Q3 - V3	VTB3	EE8313	_____ Ω	Ω
	B3B	N/A		
Q3 - B6	VTB6	EE8613	_____ Ω	Ω
	B6B	N/A		

Technician(s) _____ Date _____

MQSX Corrector Coil Taps				
Component	FermiLab Label	CERN Label	Range	Resistance
Q3 - A2	VTA2	EE8223	_____ Ω	Ω
	A2B	N/A		

Technician(s) _____ Date _____

MCSOX Corrector Coil Taps				
Component	FermiLab Label	CERN Label	Range	Resistance
Q3 - A3	VTA3	EE8323	_____ Ω	Ω
	A3B	N/A		
Q3 - A4	VTA4	EE8423	_____ Ω	Ω
	A4B	N/A		
Q3 - B4	VTB4	EE8413	_____ Ω	Ω
	B4B	N/A		

Technician(s) _____ Date _____

21.3 Hipot according to table below. Hipot to 3kV. Maximum leakage is 3μA.

STOP **Have Crew Chief verify setup and sign below before continuing.**

Crew Chief _____ Date _____

Hipot Heaters to Coil and Ground.

High Potential	Grounded	Floating	Leakage
All Strip Heaters	Coils, Yoke, Q3 Instrumentation Bus, Lead and Corrector Coil Busses, RTD's and Warm-up Heaters	Nothing	

Hipot Coil to Heaters and Ground.

High Potential	Grounded	Floating	Leakage
All Coils	Strip Heaters, Yoke, Q3 Instrumentation Bus, 8kA and 5kA Lead Busses and Corrector Coil Busses, RTD's and Warm-up Heaters	Nothing	

Technician(s) _____ Date _____

Responsible Authority/Physicist _____ Date _____

22.0 Installation of Hypertronics

22.1 Assemble/Install Hypertronics Connectors, **without Cover** at **Non-IP End** as per Q3 Module Assembly (ME-369900). Pin Numbers for connectors are shown in Table 22.1 below.

Table 22.1

Module	Pin	Fermilab Label	CERN Label	KEK Label	Description
M1	1				Blank Module
M1	2				
M1	3				
M1	4				
M1	5				
M2	1	VTa1Q1	EE1111	a1	Q1 Lead Voltage Tap "a" , primary
M2	2	VTa2Q1	EE1121	a2	Q1 Lead Voltage Tap "a", redundant
M2	3	VTc1Q1	EE1211	c1	Q1 Center Voltage Tap "c", primary
M2	4	VTc2Q1	EE1221	c2	Q1 Center Voltage Tap "c", redundant
M2	5	VTb1Q1	EE1311	b1	Q1 Lead Voltage Tap "b", primary
M3	1	VTc1Q2a	EE1212		Q2a Center Voltage Tap "c", primary
M3	2	Empty	Empty		No connection
M3	3	VTa2Q2a	EE1122		Q2a lead Voltage Tap "a", redundant
M3	4	VTa1Q2a	EE1112		Q2a Lead Voltage Tap "a", primary
M3	5	VTb2Q1	EE1321	b2	Q1 Lead Voltage Tap "b", redundant
M4	1	VTc2Q2a	EE1222		Q2a Center Voltage Tap "c", redundant
M4	2	Empty	Empty		No connection
M4	3	VTb1Q2a	EE1312		Q2a Lead Voltage Tap "b", primary
M4	4	VTb2Q2a	EE1322		Q2a Lead Voltage Tap "b", redundant
M4	5	VTb1Q2b	EE1612		Q2b lead Voltage Tap "b", primary
M5	1	Empty	Empty		No connection
M5	2	VTc2Q2b	EE1522		Q2b Center Voltage Tap "c", redundant
M5	3	VTc1Q2b	EE1512		Q2b Center Voltage Tap "c", primary
M5	4	Empty	Empty		No connection
M5	5	VTb2Q2b	EE1622		Q2b Lead Voltage Tap "b" redundant
M6	1	VTa1Q2b	EE1412		Q2b Lead Voltage Tap "a", primary
M6	2	VTa2Q2b	EE1422		Q2b Lead Voltage Tap "a", redundant
M6	3	Empty	Empty		No connection
M6	4	Empty	Empty		No connection
M6	5	Empty	Empty		No connection
M7	1				Blank Module
M7	2				
M7	3				
M7	4				
M7	5				

Table 22.1 (continued)

Module	Pin	Fermilab Label	CERN Label	KEK Label	Description
M8	1	VTH1	EE8121		Corrector voltage tap Q1-H1 (skew dipole) (on MCBX, MCBXH, A+ lead)
M8	2	VTV1	EE8111		Corrector voltage tap Q1-V1 (normal dipole) (on MCBX, MCBXV A+ lead)
M8	3	VTH2	EE8122		Corrector voltage tap Q2-H2 (skew dipole) (on MCBX, MCBXH, A+ lead)
M8	4	VTV2	EE8112		Corrector voltage tap Q2-V2 (normal dipole) (on MCBX, MCBXV, A+ lead)
M8	5	Empty	Empty		No connection
M9	1				Blank Module
M9	2				
M9	3				
M9	4				
M9	5				
M10	1	W1aQ1	EH8311+		Q1 Cryogenic Heater lead end - wire at top (CERN #1 I+)
M10	2	W2aQ1	EH8311-		Q1 Cryogenic Heater lead end - wire at bottom (CERN #1 I-)
M10	3	W1bQ1	EH8321+		Q1 Cryogenic Heater non-lead end - wire at top (CERN #2 I+)
M10	4	W2bQ1	EH8321-		Q1 Cryogenic Heater non-lead end - wire at bottom (CERN #2 I-)
M10	5	Empty	Empty		No connection
M11	1	W1aQ2A	EH8312+		Q2A Cryogenic Heater lead end - wire toward cold mass end plate (CERN #1 I+)
M11	2	W2aQ2A	EH8312-		Q2A Cryogenic Heater lead end - wire toward cold mass mag center (CERN #1 I-)
M11	3	W1bQ2A	EH8322+		Q2A Cryogenic Heater non-lead end- wire toward cold mass end plate (CERN #2 I+)
M11	4	W2bQ2A	EH8322-		Q2A Cryogenic Heater non-lead end- wire toward cold mass mag center (CERN #2 I-)
M11	5	Empty	Empty		No connection
M12	1	W1aQ2B	EH8332+		Q2B Cryogenic Heater lead end - wire toward cold mass end plate (CERN #1 I+)
M12	2	W2aQ2B	EH8332-		Q2B Cryogenic Heater lead end - wire toward cold mass mag center (CERN #1 I-)
M12	3	W1bQ2B	EH8342+		Q2B Cryogenic Heater non-lead end- wire toward cold mass end plate (CERN #2 I+)
M12	4	W2bQ2B	EH8342-		Q2B Cryogenic Heater non-lead end- wire toward cold mass mag center (CERN #2 I-)
M12	5	Empty	Empty		No connection

Table 22.1 (continued)

Module	Pin	Fermilab Label	CERN Label	KEK Label	Description
M13	1				Blank Module
M13	2				
M13	3				
M13	4				
M13	5				
M14	1	H1aQ1	YT1111+	HA1	Q1 Protection (Strip) Heater, ("a" circuit) (CERN lead #1+)
M14	2	Empty	Empty		No connection
M14	3	H2aQ1	YT1111-	HA2	Q1Protection (Strip) Heater, ("a" circuit) (CERN lead #1-)
M14	4	Empty	Empty		No connection
M14	5	H1bQ1	YT1121+	HB1	Q1 Protection (Strip) Heater, ("b" circuit) (CERN lead #2+)
M15	1	Empty	Empty		No connection
M15	2	H1aQ2a	YT1112+		Q2a Protection (Strip) Heater, 1-4 & 2-3 circuit (FNAL lead A+) (CERN lead #1+)
M15	3	Empty	Empty		No connection
M15	4	H2bQ1	YT1121-	HB2	Q1 Protection (Strip) Heater, ("b" circuit) (CERN lead #2-)
M15	5	Empty	Empty		No connection
M16	1	H2aQ2a	YT1112-		Q2a Protection (Strip) Heater, 1-4 & 2-3 circuit (FNAL lead A-) (CERN lead #1-)
M16	2	Empty	Empty		No connection
M16	3	H1bQ2a	YT1122+		Q2a Protection (Strip) Heater, 1-2 & 3-4 circuit (FNAL lead B+) (CERN lead#2+)
M16	4	Empty	Empty		No connection
M16	5	H2bQ2a	YT1122-		Q2a Protection (Strip) Heater, 1-2 & 3-4 circuit (FNAL lead B-) (CERN lead #2-)
M17	1	Empty	Empty		No connection
M17	2	H2aQ2b	YT1132-		Q2b Protection (Strip) Heater, 1-4 & 2-3 circuit (FNAL lead A-) (CERN lead #1-)
M17	3	Empty	Empty		No connection
M17	4	H1aQ2b	YT1132+		Q2b Protection (Strip) Heater, 1-4 & 2-3 circuit (FNAL lead A+) (CERN lead #1+)
M17	5	Empty	Empty		No connection
M18	1	H1bQ2b	YT1142+		Q2b Protection (Strip) Heater, 1-2 & 3-4 circuit (FNAL lead B+) (CERN lead#2+)
M18	2	Empty	Empty		No connection
M18	3	H2bQ2b	YT1142-		Q2b Protection (Strip) Heater, 1-2 & 3-4 circuit (FNAL lead B-) (CERN lead #2-)
M18	4	Empty	Empty		No connection
M18	5	Empty	Empty		No connection

Table 22.1 (continued)

Module	Pin	Fermilab Label	CERN Label	KEK Label	Description
M19	1				Blank Module
M19	2				
M19	3				
M19	4				
M19	5				
Note: Pin Numbers of Module M20 are not listed in numerical order.					
M20	1	TaQ1_I+	TT8311 I+		Q1 RTD, primary Wire color: Yellow
M20	2	TaQ1_I-	TT8311 I-		Q1 RTD, primary Wire color: Green
M20	3	TaQ1_V+	TT8311 U+		Q1 RTD, primary Wire color: Black
M20	4	TaQ1_V-	TT8311 U-		Q1 RTD, primary Wire color: Red
M20	5	TbQ1_I+	TT8321 I+		Q1 RTD, redundant: Wire color: Yellow
M20	6	TbQ1_I-	TT8321 I-		Q1 RTD, redundant: Wire color: Green
M20	11	TbQ1_V+	TT8321 U+		Q1 RTD, redundant: Wire color: Black
M20	10	TbQ1_V-	TT8321 U-		Q1 RTD, redundant: Wire color: Red
M20	9	TaQ2a_I+	TT8312 I+		Q2a RTD, primary Wire color: Yellow
M20	8	TaQ2a_I-	TT8312 I-		Q2a RTD, primary Wire color: Green
M20	7	TaQ2a_V+	TT8312 U+		Q2a RTD, primary Wire color: Black
M20	12	TaQ2a_V-	TT8312 U-		Q2a RTD, primary Wire color: Red
M20	13	TbQ2a_I+	TT8322 I+		Q2a RTD, redundant: Wire color: Yellow
M20	14	TbQ2a_I-	TT8322 I-		Q2a RTD, redundant: Wire color: Green
M20	15	TbQ2a_V+	TT8322 U+		Q2a RTD, redundant: Wire color: Black
M20	16	TbQ2a_V-	TT8322 U-		Q2a RTD, redundant: Wire color: Red
M20	17	Empty	Empty		No connection
Note: Pin Numbers of Module M21 are not listed in numerical order.					
M21	1	TaQ2b_I+	TT8332 I+		Q2b RTD, primary Wire color: Yellow
M21	2	TaQ2b_I-	TT8332 I-		Q2b RTD, primary Wire color: Green
M21	3	TaQ2b_V+	TT8332 U+		Q2b RTD, primary Wire color: Black
M21	4	TaQ2b_V-	TT8332 U-		Q2b RTD, primary Wire color: Red
M21	5	TbQ2b_I+	TT8342 I+		Q2b RTD, redundant: Wire color: Yellow
M21	6	TbQ2b_I-	TT8342 I-		Q2b RTD, redundant: Wire color: Green
M21	11	TbQ2b_V+	TT8342 U+		Q2b RTD, redundant: Wire color: Black
M21	10	TbQ2b_V-	TT8342 U-		Q2b RTD, redundant: Wire color: Red
M21	9	Empty	Empty		No connection
M21	8	Empty	Empty		No connection
M21	7	Empty	Empty		No connection
M21	12	Empty	Empty		No connection
M21	13	Empty	Empty		No connection
M21	14	Empty	Empty		No connection
M21	15	Empty	Empty		No connection
M21	16	Empty	Empty		No connection
M21	17	Empty	Empty		No connection

Hypertronics Connector Pin Locations (Q3 non-IP end)

VIEW: Male (pin) solder cup side

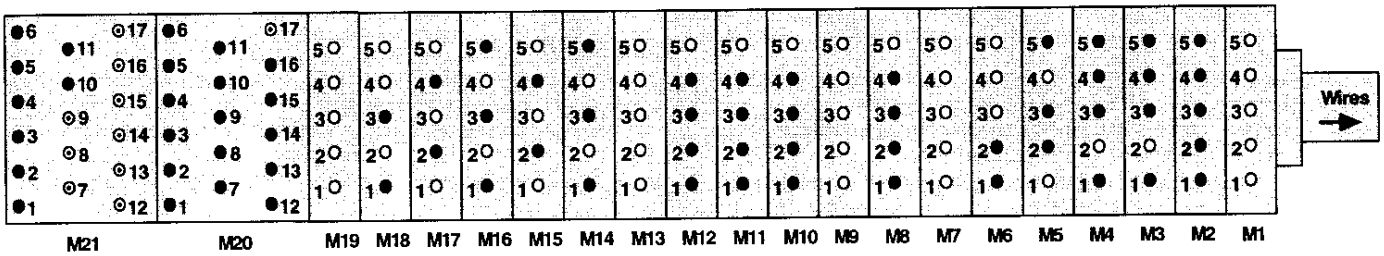

- ● Hole filled in grey: Wire soldered to pin.
- ⊙ Hole with dot in center: Pin exists but no wire soldered to it.
- ○ Hole filled in white: No pin. Hole is drilled out.

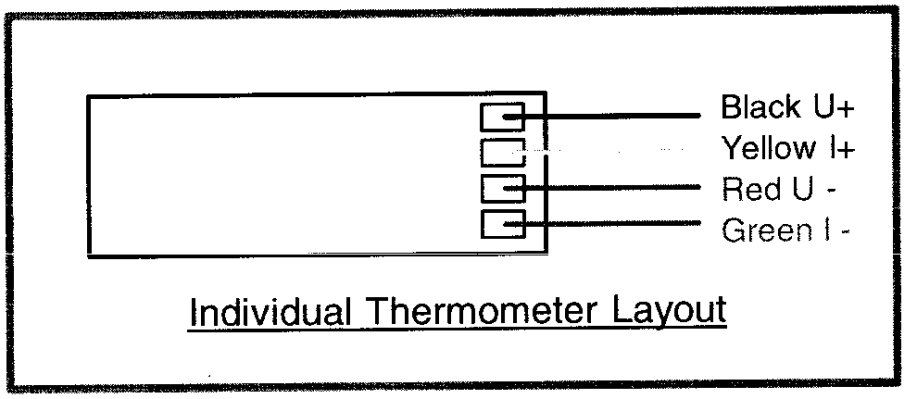

Note(s):

Ensure the Hypertronics cover has <u>NOT</u> been installed.

STEVE HELIS
DAN WATSON
Technician(s)

10/19/04
10/19/04
Date

22.2 Contact LHC Project Physicist / designee and obtain signature before Hypertronics Cover is installed.

Responsible Authority/Physicist

10/28/04
Date

22.3 After LHC Project Physicist / designee has signed the above step, complete the installation of the Hypertronics.

STEVE HELIS
DAN WATSON
Technician(s)

10/19/04
10/19/04
Date

23.0 Final Electrical Inspection

23.1 Perform an electrical inspection on each of the Individual Quadrants and the Cold Mass. Refer to the Valhalla and Leader Free Standing Coil Measurement Procedure (ES-292306).

To measure the Resistance of a Q3 Cold Mass:

1. Use Valhalla Scientific 4300B digital micro-ohmmeter.
2. Set Test Current to 0.1 amp.
3. Set Scale to 2V full scale.
4. Turn temperature compensation on.
5. Turn test current off.
6. Connect I_{HI} to Q4 inner power lead as shown in figure.
7. Connect I_{LO} to Q3 inner power lead as shown in figure.
8. Turn test current on.
9. Connect V_{HI} and V_{LO} to voltage taps as shown in resistance table.
10. To measure Total with leads, connect V_{HI} to Q4 power lead and V_{LO} to Q3 power lead.
11. Read resistance and record in traveler.

(Q3) Resistance				Nominal 3.35 to 3.45 Ω
Voltage Tap Serial Numbers				Total Resistance
Connect	Fermi	CERN	KEK	
V_{HI}	VTa1Q3	EE1113	a1	3.425 Ω
V_{LO}	VTc1Q3	EE1213	c1	
V_{HI}	VTc1Q3	EE1213	c1	3.424 Ω
V_{LO}	VTb1Q3	EE1313	b1	
V_{HI}	VTa1Q3	EE1113	a1	6.85 Ω
V_{LO}	VTb1Q3	EE1313	b1	

		Total Resistance with Leads
		Nominal 6.75 to 6.85 Ω
V_{HI}	Q4 Power Lead	6.89 Ω
V_{LO}	Q3 Power Lead	

Technician(s) _____ Date 10 26-04

Check resistance of Redundant Voltage Taps.

Q3 Redundant Voltage Taps				Nominal 3.35 to 3.45 Ω
Connect	Fermi	CERN	KEK	Resistance
V_{HI}	VTa2Q3	EE1123	a2	3.425 Ω
V_{LO}	VTc2Q3	EE1223	c2	
V_{HI}	VTc2Q3	EE1223	c2	3.424 Ω
V_{LO}	VTb2Q3	EE1323	b2	

Technician(s) _____ Date 10-26-04

To measure Ls and Q of a Q3 Cold Mass:

1. Use Hewlett Packard HP4284A digital LCR meter.
2. Turn line switch to on. The words "Measurement Display" should now be highlighted in the upper left corner of the display screen.
3. Use cursor buttons (shown in figure with arrows) to toggle down until "function" is highlighted near the upper left corner of the display screen.
4. Push the lowest of the five buttons to the right of display 3 times. (this button is shaded gray in the figure) The line in the display screen next to the second button down should now read "Ls-Q" and "function" near the upper left corner of the display should have the option "Ls-Q" chosen.
5. Scroll to "integer" using the cursor buttons. "Integer" will have the option "medium" chosen.
6. Press the 3rd button of five. The word "medium" should change to "long".
7. Connect H_{cur} to Q4 power lead as shown in figure.
8. Connect L_{cur} to Q3 power lead as shown in figure.
9. Connect H_{pot} and L_{pot} to voltage taps as shown in table.
10. Read Ls and Q from display and record in traveler.

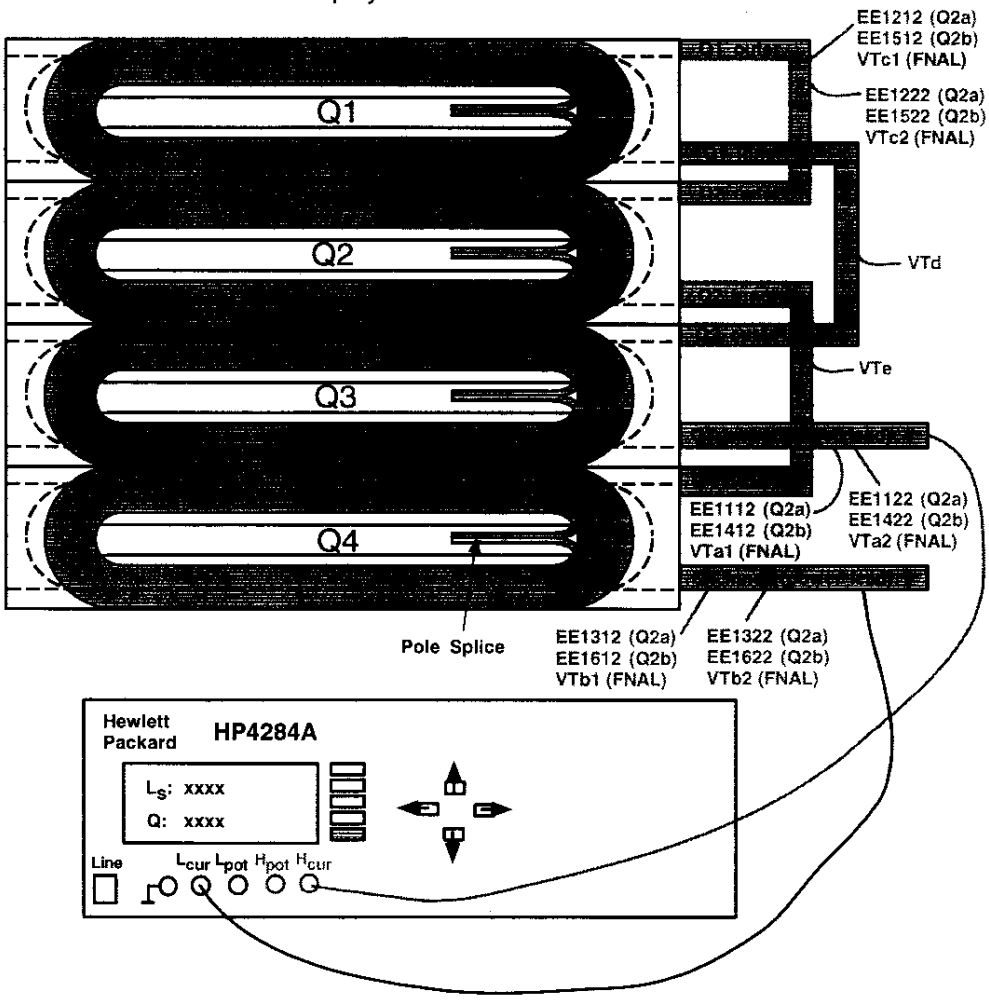

(Q3) Inductance				Nominal 15 to 16 mH
Voltage Tap Serial Numbers				Total Inductance
Connect	Fermi	CERN	KEK	
H_{POT}	VTa1Q3	EE1113	a1	15.179 mH
L_{POT}	VTc1Q3	EE1213	c1	
H_{POT}	VTc1Q3	EE1213	c1	15.190 mH
L_{POT}	VTb1Q3	EE1313	b1	

				Nominal 30 to 32 mH
				Total Inductance
H_{POT}	VTa1Q3	EE1113	a1	30.355 mH
L_{POT}	VTb1Q3	EE1313	b1	

(Q3) Q-Factor				Nominal 1.0 to 1.2
Voltage Tap Serial Numbers				Total Q
Connect	Fermi	CERN	KEK	
H_{POT}	VTa1Q3	EE1113	a1	1.1
L_{POT}	VTc1Q3	EE1213	c1	
H_{POT}	VTc1Q3	EE1213	c1	1.1
L_{POT}	VTb1Q3	EE1313	b1	

				Nominal 1.0 to 1.2
				Total Q
H_{POT}	VTa1Q3	EE1113	a1	1.1
L_{POT}	VTb1Q3	EE1313	b1	

Technician(s)

10-26-04
Date

To measure the resistance of a Thermometer (RTD):

1. Use Hewlett Packard HP3457A digital multimeter.
2. Record temperature of building within +/- 5 degrees.
3. Press line button to turn line on.
4. Connect wires as shown in Figure below.
   U+ (Black) to Sense HI
   I+ (Yellow) to Input HI
   U- (Red) to Sense LO
   I- (Green) to Input LO
5. Push blue button (function key) once.
6. Push OHMF button.
7. Verify arrow in readout is above the 4WΩ (meaning a 4 wire resistance measurement).
8. Read resistance in ohms and record in traveler.

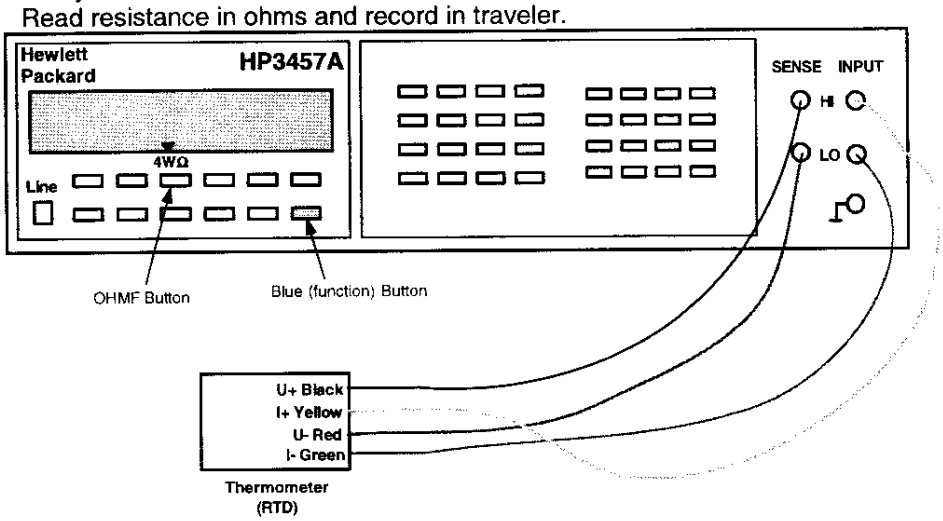

To measure the resistance of a Cryogenic (Warm-up) Heater

1. Use Hewlett Packard HP3457A digital multimeter.
2. Record temperature of building within +/- 5 degrees.
3. Press line button to turn line on.
4. Connect wires as shown in Figure below.
5. Push blue button (function key) once.
6. Push OHMF button.
7. Verify arrow in readout is above the 4WΩ (meaning a 4 wire resistance measurement).
   Note: Although this is technically a 4 wire measurement, it is effectively a 2 wire measurement, since there are only 2 wires connected to each heater.
8. Read resistance in ohms and record in traveler.

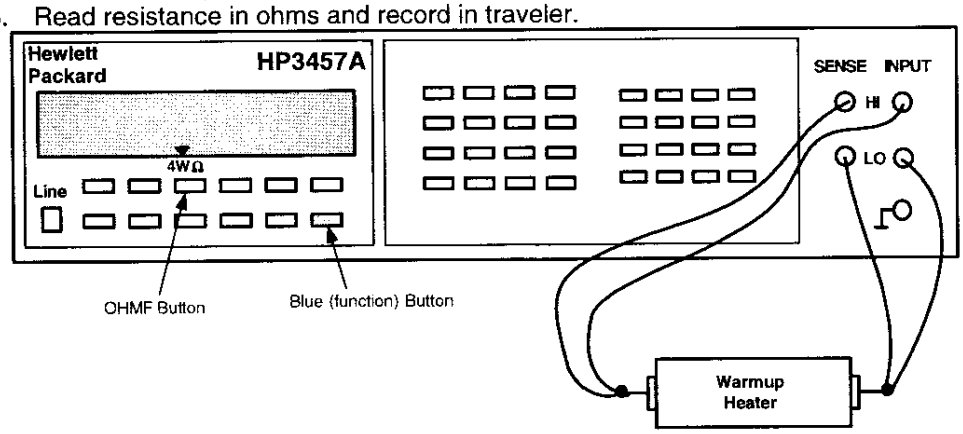

Q3 - RTD's and Cryogenic (warm-up) Heaters				
Temperature of Building (± 5°): _____				
Component	**Fermi**	**CERN**	**Range**	**Resistance**
Q3 RTD, primary	TaQ3	TT8313	60 to 70 Ω	72.74 Ω
Q3 RTD, redundant	TbQ3	TT8323	60 to 70 Ω	67.24 Ω
Q3 Cryogenic (warm-up) Heater (LE) - wire at top (CERN #1 I+)	W1aQ3	EH8313+	16 to 18.5 Ω	16.59 Ω
Q3 Cryogenic (warm-up) Heater (LE) - wire at bottom (CERN #1 I-)	W2aQ3	EH8313-		
Q3 Cryogenic (warm-up) Heater (Non-LE) - wire at top (CERN #2 I+)	W1bQ3	EH8323+	16 to 18.5 Ω	16.194 Ω
Q3 Cryogenic (warm-up) Heater (Non-LE) - wire at bottom (CERN #2 I-)	W2bQ3	EH8323-		

Technician(s) _____ Date 10-26-04

Using the Hewlett Packard HP3457A digital multimeter, measure the Protection (Strip) Heater Resistance for Q3.

Q3 Protection (Strip) Heater Resistance					
Fermi	**CERN**	**KEK**	**Description**	**Limit**	**Resistance**
H1aQ3	YT1113+	HA1	Circuit A	28 to 32 Ω	30.28 Ω
H2aQ3	YT1113-	HA2			
H1bQ3	YT1123+	HB1	Circuit B	28 to 32 Ω	30.28 Ω
H2bQ3	YT1123-	HB2			

Technician(s) _____ Date 10-26-04

OMIT FOR THIS CASE ONLY PER R. BOSSERT

23.2 Using the HP4284A, connect power thru the corrector Power Leads (H1B and H1A to measure Q1-H1 or V1B and V1A to measure Q1-V1). Connect the Sense Leads as shown in table below and record resistance.

MCBXA Corrector Coil Taps				
Component	FermiLab Label	CERN Label	Range	Resistance
Q3 - H3	VTH3	EE8123	_____ Ω	Ω
	H3B	N/A		
Q3 - V3	VTV3	EE8113	_____ Ω	Ω
	V3B	N/A		
Q3 - V3	VTB3	EE8313	_____ Ω	Ω
	B3B	N/A		
Q3 - B6	VTB6	EE8613	_____ Ω	Ω
	B6B	N/A		

N/A
Technician(s) _____ Date _____

MQSX Corrector Coil Taps				
Component	FermiLab Label	CERN Label	Range	Resistance
Q3 - A2	VTA2	EE8223	_____ Ω	Ω
	A2B	N/A		

N/A
Technician(s) _____ Date _____

MCSOX Corrector Coil Taps				
Component	FermiLab Label	CERN Label	Range	Resistance
Q3 - A3	VTA3	EE8323	_____ Ω	Ω
	A3B	N/A		
Q3 - A4	VTA4	EE8423	_____ Ω	Ω
	A4B	N/A		
Q3 - B4	VTB4	EE8413	_____ Ω	Ω
	B4B	N/A		

N/A
Technician(s) _____ Date _____

XXX 23.3 Hipot according to table below. Hipot to 3kV. Maximum leakage is 3μA.

STOP

Have Crew Chief verify setup and sign below before continuing.

Crew Chief _____ Date 10/29/04

Hipot Heaters to Coil and Ground.

High Potential	Grounded	Floating	Leakage
All Strip Heaters	Coils, Yoke, Q3 Instrumentation Bus, Lead and Corrector Coil Busses, RTD's and Warm-up Heaters	Nothing	.511 μA

Hipot Coil to Heaters and Ground.

High Potential	Grounded	Floating	Leakage
All Coils	Strip Heaters, Yoke, Q3 Instrumentation Bus, 8kA and 5kA Lead Busses and Corrector Coil Busses, RTD's and Warm-up Heaters	Nothing	.190 μA

Technician(s) _____ Date 10-29-04

Responsible Authority/Physicist _____ Date 11-6-04

24.0 Production Complete

24.1 Process Engineering verify that the Q3 Cold Mass Module Assembly Traveler (5520-TR-333729) is accurate and complete. This shall include a review of all steps to ensure that all operations have been completed and signed off. Ensure that all Discrepancy Reports, Nonconformance Reports, Repair/Rework Forms, Deviation Index and dispositions have been reviewed by the Responsible Authority for conformance before being approved.

Comments:

J. Spostti
Process Engineer/Designee

9/9/05
Date

ADDITIONAL PARTS REQUEST

ADDITIONAL PARTS REQUEST FORM SHALL BE USED TO ACCESS ALL ITEMS FROM INVENTORY WITH THE EXCEPTION OF PARTS KITS.

THIS FORM MUST BE SIGNED BY AN ACQUISITIONER BEFORE BRINGING TO THE STOCKROOM

MAGNET OR COIL # LMQXC01

DATE REQUESTED 8/5/04

BUDGET CODE LCD 300/1.1.1.3.4

JOB TICKET #

MACHINE SHOP REQ. #

PURCHASE RELEASE #

REQUESTED BY J. Rife

DELIVER TO J. Rife - ICB

NEED BY DATE 8/6/04

MMR #

PO #

OTHER

PARTS STATUS (CHECK ONE)

- ☐ DEFECTIVE PARTS ISSUED
- ☐ PARTS SCRAPPED
- ☐ A/R ITEMS
- ☐ DEFECTIVE ASSEMBLY
- ☐ MISSING FROM KIT ALREADY ISSUED
- ☒ INDIVIDUAL PARTS
- ☐ CONSUMABLES
- ☐ PARTS LOST

ACQUISITIONER SIGNATURE Marsha Schmidt ID# 4223 DATE 8/5/04

PLEASE INDICATE REVISION REQUIRED

LOCATION	PART #	REV	QTY	UOM	DESCRIPTION	RF #	SIR #
In QC IB 4	ME 390667	-	1	Each	Q3Non IP End Dome	81846	

POSTED

STOCKROOM SIGNATURE [signature] ID# 12698 DATE 8/6/04

PARTS DELETED FROM DATABASE Doug Kelley ID# 12904 DATE 8-14-04

A COPY OF THIS FORM IS TO BE INCLUDED IN WITH THE TRAVELER

PARTS RECEIVED BY Steve Gould ID# 4965 DATE 8/6/04

ADDITIONAL PARTS REQUEST

0102-ES-292302 Revision E

HOT

ADDITIONAL PARTS REQUEST FORM SHALL BE USED TO ACCESS ALL ITEMS FROM INVENTORY WITH THE EXCEPTION OF PARTS KITS.

THIS FORM MUST BE SIGNED BY AN ACQUISITIONER BEFORE BRINGING TO THE STOCKROOM

MAGNET OR COIL # LMQXC01

REQUESTED BY Jim Rife

DATE REQUESTED 8/3/04

DELIVER TO Jim Rife

BUDGET CODE LCD 300.1.1.1.3.4

NEED BY DATE 8/4/04 HOT

JOB TICKET #

MMR #

MACHINE SHOP REQ. #

PO #

PURCHASE RELEASE #

OTHER

PARTS STATUS (CHECK ONE)

☐ DEFECTIVE PARTS ISSUED ☐ PARTS SCRAPPED ☐ A/R ITEMS

☐ DEFECTIVE ASSEMBLY ☐ MISSING FROM KIT ALREADY ISSUED

☒ INDIVIDUAL PARTS ☐ CONSUMABLES ☐ PARTS LOST

POSTED

ACQUISITIONER SIGNATURE Marsha Schmidt ID# 4223 DATE 8/3/04

PLEASE INDICATE REVISION REQUIRED

Tot Stk	LOCATION	PART #	REV	QTY	UOM	DESCRIPTION	RF #	SIR #
9	R7,3,4	MC-390666	0	1	Each	Q3 Body Tube Ext Weldback Ring		x
0	~~IB4~~	~~ME-390668~~	~~0~~	~~1~~	~~Each~~	~~Q3 Non IP End Dome Weldment~~		
103	R2,S2,L4	MA-390484	0	8	Each	.010 Corrector Magnet Shim	79125	x
113	R2,S2,L4	MA-390482	0	8	Each	.002 Corrector Magnet Shim	79123	x
170	R2,S2,L4	MA-390483	0	8	Each	.005 Corrector Magnet Shim	79124	x
40	R10,1,2	MC-390300	B	2	Each	Beam Tube Flange	77028	x
17	IB4 BIN	MA-393030	0	8	Each	Set Screw 10-32 X .188 SS	77839	x
17	IB4 BIN	MA-390246	0	8	Each	SHCS 1/2-20 X 2.5	74618	x

STOCKROOM SIGNATURE [signature] ID# 1268 DATE 8/4/04

PARTS DELETED FROM DATABASE Doug Kelley ID# 12304 DATE 8/10/04

A COPY OF THIS FORM IS TO BE INCLUDED IN WITH THE TRAVELER

PARTS RECEIVED BY [signature] ID# 4895 DATE 8/4/04

LMGXCO

LCD

PLEASE INDICATE REVISION REQUIRED

0102-ES-292302 Revision D

	LOCATION	PART #	REV	QTY	UOM	DESCRIPTION	RF #	SIR #
	IB4 BIN	*MB-390270*	*A*	*4*	*Each*	*Q1/Q3 Transp Restr Adj*	76665	X
57	*IB4 BIN*	*MB-390228*	*0*	*12*	*Each*	*Mounting Flat Washers*	80991	X
79	*IB 4 BIN*	*MA-390247*	*0*	*4*	*Each*	*SHCS 1/2-20 X 3*	79622	X
	~~*P/N*~~	~~*ME-390037*~~	~~*C*~~	~~*1*~~	~~*Each*~~	~~*Corrector MTG Ring*~~		
0	~~*IB4 BIN*~~	~~*MD-390667*~~	~~*0*~~	~~*1*~~	~~*Each*~~	*Q3 Non IP Body Tube Ext Weldment*		
9	~~*P/N*~~	~~*ME-390221*~~	~~*C*~~	~~*1*~~	~~*Each*~~	~~*Q3 IP End Dome Assy*~~		
91	*R2,S2,L4*	*MA-390485*	*0*	*8*	*Each*	*.015 Corrector Shim*	79126	X

ADDITIONAL PARTS REQUEST

ADDITIONAL PARTS REQUEST FORM SHALL BE USED TO ACCESS ALL ITEMS FROM INVENTORY WITH THE EXCEPTION OF PARTS KITS.

THIS FORM MUST BE SIGNED BY AN ACQUISITIONER BEFORE BRINGING TO THE STOCKROOM

MAGNET OR COIL # *LMQXC01*

DATE REQUESTED *8/2/04*

BUDGET CODE *LCD 300.1.1.1.3.4*

JOB TICKET #

MACHINE SHOP REQ. #

PURCHASE RELEASE #

REQUESTED BY *Jim Rife*

DELIVER TO *Jim Rife*

NEED BY DATE *8/2/04*

MMR #

PO #

OTHER

PARTS STATUS (CHECK ONE)

- ☐ DEFECTIVE PARTS ISSUED
- ☐ PARTS SCRAPPED
- ☐ A/R ITEMS
- ☐ DEFECTIVE ASSEMBLY
- ☐ MISSING FROM KIT ALREADY ISSUED
- ☒ INDIVIDUAL PARTS
- ☐ CONSUMABLES
- ☐ PARTS LOST

ACQUISITIONER SIGNATURE Marsha Schmidt **ID#** 4223 **DATE** 8/2/04

PLEASE INDICATE REVISION REQUIRED

STK 9

LOCATION	PART #	REV	QTY	UOM	DESCRIPTION	RF #	SIR #
R1,S3,L3	*ME-390664*	*0*	*1*	*Each*	*Q3 Mounting Ring*	80927	
	418132		*1*	*Each*	*Hypertronics Connector Male*		
	418118		*1*	*Each*	*Hypertronics Connector Female*		

POSTED

STOCKROOM SIGNATURE [signature] **ID#** D648 **DATE** 8/2/04

PARTS DELETED FROM DATABASE Doug Kelley **ID#** 12204 **DATE** 8/3/04

A COPY OF THIS FORM IS TO BE INCLUDED IN WITH THE TRAVELER

PARTS RECEIVED BY [signature] **ID#** 4595 **DATE** 8/2/04

ADDITIONAL PARTS REQUEST

ADDITIONAL PARTS REQUEST FORM SHALL BE USED TO ACCESS ALL ITEMS FROM INVENTORY WITH THE EXCEPTION OF PARTS KITS.

THIS FORM MUST BE SIGNED BY AN ACQUISITIONER BEFORE BRINGING TO THE STOCKROOM

MAGNET OR COIL # LMQXC01

DATE REQUESTED 8/2/04

BUDGET CODE LCD 1.1.1.3.4

JOB TICKET #

MACHINE SHOP REQ. #

PURCHASE RELEASE #

REQUESTED BY Jim Rife

DELIVER TO Jim Rife

NEED BY DATE 8/9/04

MMR #

PO #

OTHER

PARTS STATUS (CHECK ONE)

- ☐ DEFECTIVE PARTS ISSUED
- ☐ PARTS SCRAPPED
- ☐ A/R ITEMS
- ☐ DEFECTIVE ASSEMBLY
- ☐ MISSING FROM KIT ALREADY ISSUED
- ☒ INDIVIDUAL PARTS
- ☐ CONSUMABLES
- ☐ PARTS LOST

ACQUISITIONER SIGNATURE [signature] **ID#** 4223 **DATE** 8/2/04

PLEASE INDICATE REVISION REQUIRED

INSP	LOCATION	PART #	REV	QTY	UOM	DESCRIPTION	RF #	SIR #
10	R1,S2,L2	MA-418106 ✓	A	1	Each	28 Unit Male Pin Rack	N/A	
120	IB4 BIN	MA-418114 ✓	B	4	Each	M3 Threaded Stud Assy	81553	
10	R1,1,1,2	MA-418117 ✓	0	4	Each	Pan HD Screw 4-40 X 1/2 LG Steel	79891	
100	R1,1,2	MA-418116 ✓	0	4	Each	Pan HD Screw 6-32 X 3/8 Lg Steel	79892	POSTED
10	IB4 BIN	MC-418115 ✓	0	1	Each	Support Arm Weldment 28 Unit	80120	
81	R1,1,2	MA-418109 ✓	A	4	Each	Tie Down Link	79854	
20	IB4 BIN	MA-418112 ✓	0	1	Each	Clamping Bar	79990	
4	IB4 BIN	MA-418113 ✓	0	1	Each	Grommet	NA	

STOCKROOM SIGNATURE [signature] **ID#** 11939 **DATE** 8/10/04

PARTS DELETED FROM DATABASE Doug Kelley **ID#** 12304 **DATE** 8/12/04

A COPY OF THIS FORM IS TO BE INCLUDED IN WITH THE TRAVELER

PARTS RECEIVED BY [signature] **ID#** 4965 **DATE** 8/10/04

PLEASE INDICATE REVISION REQUIRED

0102-ES-292302 Revision D

LOCATION	PART #	REV	QTY	UOM	DESCRIPTION	RF #	SIR #
R1,1,2	*MC-418067* ✓	*A2*	*1*	*Each*	*Connector Access Cover 28 Unit*	N/A	

0102-ES-292302 Revision E

ADDITIONAL PARTS REQUEST

ADDITIONAL PARTS REQUEST FORM SHALL BE USED TO ACCESS ALL ITEMS FROM INVENTORY WITH THE EXCEPTION OF PARTS KITS.

THIS FORM MUST BE SIGNED BY AN ACQUISITIONER BEFORE BRINGING TO THE STOCKROOM

MAGNET OR COIL # *LMQXC01*

DATE REQUESTED *8/2/04*

BUDGET CODE *LCD 300.1.1.1.3.4*

JOB TICKET # _____

MACHINE SHOP REQ. # _____

PURCHASE RELEASE # _____

REQUESTED BY *Jim Rife*

DELIVER TO *Jim Rife*

NEED BY DATE *8/9/04*

MMR # _____

PO # _____

OTHER _____

PARTS STATUS (CHECK ONE)

☐ DEFECTIVE PARTS ISSUED
☐ DEFECTIVE ASSEMBLY
☒ INDIVIDUAL PARTS
☐ PARTS SCRAPPED
☐ MISSING FROM KIT ALREADY ISSUED
☐ CONSUMABLES
☐ A/R ITEMS
☐ PARTS LOST

ACQUISITIONER SIGNATURE Marsha Schmidt **ID#** 4223 **DATE** 8/2/04

PLEASE INDICATE REVISION REQUIRED

	LOCATION	PART #	REV	QTY	UOM	DESCRIPTION	RF #	SIR #
4 SK 6	R1,S1,L2	MA-418136 ✓	A	1	Each	23 Unit Female Pin Rack	N/A	
120	IB4 BIN	MA-418114 ✓	B	4	Each	M3 Threaded Stud Assy	81553	
108	R1,1,2	MA-418116 ✓	0	4	Each	Pan HD Screw 6-32 X 3/8 Lg Steel	79892	
28	IB4 BIN	MA-418112 ✓	0	1	Each	Clamping Bar	79990	
29	IB4 BIN	MA-418113 ✓	0	1	Each	Grommet	N/A	
10	R1,1,2	MC-418067 ✓	A1	1	Each	Connector Access Cover 23 Units	N/A	

POSTED

STOCKROOM SIGNATURE [signature] **ID#** 11939 **DATE** 8/10/04

PARTS DELETED FROM DATABASE Doug Kelley **ID#** 12304 **DATE** 8/10/04

A COPY OF THIS FORM IS TO BE INCLUDED IN WITH THE TRAVELER

PARTS RECEIVED BY [signature] **ID#** 4965 **DATE** 8/10/04

ADDITIONAL PARTS REQUEST

ADDITIONAL PARTS REQUEST FORM SHALL BE USED TO ACCESS ALL ITEMS FROM INVENTORY WITH THE EXCEPTION OF PARTS KITS.

THIS FORM MUST BE SIGNED BY AN ACQUISITIONER BEFORE BRINGING TO THE STOCKROOM

MAGNET OR COIL # *LQXC01*

REQUESTED BY *Jim Rife*

DATE REQUESTED *8/2/04*

DELIVER TO *Jim Rife*

BUDGET CODE *LCD 300.1.1.1.3.4*

NEED BY DATE *8/4/04*

JOB TICKET #

MMR #

MACHINE SHOP REQ. #

PO #

PURCHASE RELEASE #

OTHER

PARTS STATUS (CHECK ONE)

- ☐ DEFECTIVE PARTS ISSUED
- ☐ PARTS SCRAPPED
- ☐ A/R ITEMS
- ☐ DEFECTIVE ASSEMBLY
- ☐ MISSING FROM KIT ALREADY ISSUED
- ☒ INDIVIDUAL PARTS
- ☐ CONSUMABLES
- ☐ PARTS LOST

ACQUISITIONER SIGNATURE [signature] **ID#** 4223 **DATE** 8/2/04

PLEASE INDICATE REVISION REQUIRED

Stk.	LOCATION	PART #	REV	QTY	UOM	DESCRIPTION	RF #	SIR #
1	*IB4*	*MD-430083*	*0*	*1*	*Each*	*Q3 Corrector Wire Face Plate*	81780	
1	*R2,2,3*	*MC-430129*	*0*	*1*	*Each*	*Q3 Splice Plate MTG.Ring*	81818	
1	*R2,2,3*	*MC-430128*	*0*	*1*	*Each*	*Q3 Face Plate Mounting Bar*	81817	
9	*P/N*	*ME-390221*	*C*	*1*	*Each*	*Q3 IP end Dome Assy*	78710	POSTED
	~~*P/N*~~	~~*ME-390209*~~	~~*C*~~	~~*1*~~	~~*Each*~~	~~*LE Corrector MTG Ring*~~		
9	*IB4*	*ME-390668*	*0*	*1*	*Each*	*Q3 Non IP End Dome Weldment - Mod*	81847	
~~9~~	~~*IB4*~~	~~*MD-390667*~~	~~*0*~~	~~X 0~~	~~*Each*~~	~~*Q3 Non IP Body Tube Ext WLDMNT*~~		
19	*P/N*	*ME-390037*	*0*	*1*	*Each*	*Corrector MTG Ring*	80790	

STOCKROOM SIGNATURE [signature] **ID#** 12698 **DATE** 8/4/04

PARTS DELETED FROM DATABASE Doug Kelley **ID#** 12304 **DATE** 8/20/04

A COPY OF THIS FORM IS TO BE INCLUDED IN WITH THE TRAVELER

PARTS RECEIVED BY [signature] **ID#** 4895 **DATE** 8/4/04

ADDITIONAL PARTS REQUEST

ADDITIONAL PARTS REQUEST FORM SHALL BE USED TO ACCESS ALL ITEMS FROM INVENTORY WITH THE EXCEPTION OF PARTS KITS.

THIS FORM MUST BE SIGNED BY AN ACQUISITIONER BEFORE BRINGING TO THE STOCKROOM

MAGNET OR COIL # *LMQXC01*

REQUESTED BY *Steve Gould*

DATE REQUESTED *9/16/04*

DELIVER TO *ICB*

BUDGET CODE *300/1.1.1.3.4(LCD)*

NEED BY DATE *9/16/04*

JOB TICKET # _____

MMR # _____

MACHINE SHOP REQ. # _____

PO # _____

PURCHASE RELEASE # _____

OTHER _____

PARTS STATUS (CHECK ONE)

- ☐ DEFECTIVE PARTS ISSUED
- ☐ PARTS SCRAPPED
- ☐ A/R ITEMS
- ☐ DEFECTIVE ASSEMBLY
- ☐ MISSING FROM KIT ALREADY ISSUED
- ☒ INDIVIDUAL PARTS
- ☐ CONSUMABLES
- ☐ PARTS LOST

ACQUISITIONER SIGNATURE Mark Steuto FOR M.S. **ID#** 13069 **DATE** 9-16-04

PLEASE INDICATE REVISION REQUIRED

ISTOCK LOCATION	PART #	REV	QTY	UOM	DESCRIPTION	RF #	SIR #
02 IB#4-BIN	393291	—	2	Each	FHSCSM12X1.75MM		
98 IB#4-BIN	393175	—	2	Each	FHSCSM8X18MM		
~~47 IB#4-BIN~~	~~369532~~	~~—~~	~~6~~	~~EACH~~	~~LHC MAGNET ENDS~~		

STOCKROOM SIGNATURE _____ **ID#** _____ **DATE** _____

PARTS DELETED FROM DATABASE _____ **ID#** _____ **DATE** _____

A COPY OF THIS FORM IS TO BE INCLUDED IN WITH THE TRAVELER

PARTS RECEIVED BY _____ **ID#** _____ **DATE** _____

ADDITIONAL PARTS REQUEST

ADDITIONAL PARTS REQUEST FORM SHALL BE USED TO ACCESS ALL ITEMS FROM INVENTORY WITH THE EXCEPTION OF PARTS KITS.

THIS FORM MUST BE SIGNED BY AN ACQUISITIONER BEFORE BRINGING TO THE STOCKROOM

MAGNET OR COIL # LQXC01

DATE REQUESTED 8/2/04

BUDGET CODE LCD 300.1.1.1.3.4

JOB TICKET #

MACHINE SHOP REQ. #

PURCHASE RELEASE #

REQUESTED BY Jim Rife

DELIVER TO Jim Rife

NEED BY DATE 8/4/04

MMR #

PO #

OTHER

PARTS STATUS (CHECK ONE)

- ☐ DEFECTIVE PARTS ISSUED
- ☐ DEFECTIVE ASSEMBLY
- ☒ INDIVIDUAL PARTS
- ☐ PARTS SCRAPPED
- ☐ MISSING FROM KIT ALREADY ISSUED
- ☐ CONSUMABLES
- ☐ A/R ITEMS
- ☐ PARTS LOST

ACQUISITIONER SIGNATURE Marsha Schmidt **ID#** 4223 **DATE** 8/2/04

PLEASE INDICATE REVISION REQUIRED

	LOCATION	PART #	REV	QTY	UOM	DESCRIPTION	RF #	SIR #
54								
1	IB4	MD-430083	0	1	Each	Q3 Corrector Wire Face Plate	81780	
1	R2,2,3	MC-430129	0	1	Each	Q3 Splice Plate MTG.Ring	81818	
1	R2,2,3	MC-430128	0	1	Each	Q3 Face Plate Mounting Bar	81817	
9	P/N	ME-390221	C	1	Each	Q3 IP end Dome Assy	78710	
	P/N	~~ME-390209~~	C	1	Each	LE Corrector MTG Ring		
9	IB4	ME-390668	0	1	Each	Q3 Non IP End Dome Weldment - Mod	81847	
9	IB4	MD-390667	0	~~1~~ 0	Each	Q3 Non IP Body Tube Ext WLDMNT		
14	P/N	ME-390037	0	1	Each	Corrector MTG Ring	80790	

STOCKROOM SIGNATURE [illegible] **ID#** 12698 **DATE** 8/4/04

PARTS DELETED FROM DATABASE **ID#** **DATE**

A COPY OF THIS FORM IS TO BE INCLUDED IN WITH THE TRAVELER

PARTS RECEIVED BY [illegible] **ID#** 4895 **DATE** 8/4/04

ADDITIONAL PARTS REQUEST

ADDITIONAL PARTS REQUEST FORM SHALL BE USED TO ACCESS ALL ITEMS FROM INVENTORY WITH THE EXCEPTION OF PARTS KITS.

THIS FORM MUST BE SIGNED BY AN ACQUISITIONER BEFORE BRINGING TO THE STOCKROOM

MAGNET OR COIL # *LMQXC01*

DATE REQUESTED *9/16/04*

BUDGET CODE *300/1.1.1.3.4(LCD)*

JOB TICKET # _____

MACHINE SHOP REQ. # _____

PURCHASE RELEASE # _____

REQUESTED BY *Steve Gould*

DELIVER TO *ICB*

NEED BY DATE *9/16/04*

MMR # _____

PO # _____

OTHER _____

PARTS STATUS (CHECK ONE)

- ☐ DEFECTIVE PARTS ISSUED
- ☐ DEFECTIVE ASSEMBLY
- ☒ INDIVIDUAL PARTS
- ☐ PARTS SCRAPPED
- ☐ MISSING FROM KIT ALREADY ISSUED
- ☐ CONSUMABLES
- ☐ A/R ITEMS
- ☐ PARTS LOST

ACQUISITIONER SIGNATURE [signature] **ID#** 4223 **DATE** 9/16/04

PLEASE INDICATE REVISION REQUIRED

IN STOCK 56

LOCATION	PART #	REV	QTY	UOM	DESCRIPTION	RF #	SIR #
IB#4-BIN	*390294*		*4*	*Each*	*MCBX Restr. Nut*		

STOCKROOM SIGNATURE _____ **ID#** _____ **DATE** _____

PARTS DELETED FROM DATABASE _____ **ID#** _____ **DATE** _____

A COPY OF THIS FORM IS TO BE INCLUDED IN WITH THE TRAVELER

PARTS RECEIVED BY _____ **ID#** _____ **DATE** _____

ADDITIONAL PARTS REQUEST

0102-ES-292302 Revision E

.10T

ADDITIONAL PARTS REQUEST FORM SHALL BE USED TO ACCESS ALL ITEMS FROM INVENTORY WITH THE EXCEPTION OF PARTS KITS.

THIS FORM MUST BE SIGNED BY AN ACQUISITIONER BEFORE BRINGING TO THE STOCKROOM

MAGNET OR COIL # LMQXC01

DATE REQUESTED 8/3/04

BUDGET CODE LCD 300.1.1.1.3.4

JOB TICKET #

MACHINE SHOP REQ. #

PURCHASE RELEASE #

REQUESTED BY Jim Rife

DELIVER TO Jim Rife

NEED BY DATE 8/4/04 HOT

MMR #

PO #

OTHER

PARTS STATUS (CHECK ONE)

COPY

☐ DEFECTIVE PARTS ISSUED ☐ PARTS SCRAPPED ☐ A/R ITEMS

☐ DEFECTIVE ASSEMBLY ☐ MISSING FROM KIT ALREADY ISSUED

☒ INDIVIDUAL PARTS ☐ CONSUMABLES ☐ PARTS LOST

ACQUISITIONER SIGNATURE Marsha Schmidt **ID#** 4223 **DATE** 8/3/04

PLEASE INDICATE REVISION REQUIRED

INSTR	LOCATION	PART #	REV	QTY	UOM	DESCRIPTION	RF #	SIR #
9	R7,3,4	MC-390666	0	1	Each	Q3 Body Tube Ext Weldback Ring		X
D	~~IB4~~	~~ME-390668~~	~~0~~	~~1~~	~~Each~~	Q3 Non IP End Dome Weldment		
103	R2,S2,L4	MA-390484	0	8	Each	.010 Corrector Magnet Shim	79125	X
113	R2,S2,L4	MA-390482	0	8	Each	.002 Corrector Magnet Shim	79123	X
12	R2,S2,L4	MA-390483	0	8	Each	.005 Corrector Magnet Shim	79124	X
10	R10,1,2	MC-390300	B	2	Each	Beam Tube Flange	77028	X
17	IB4 BIN	MA-393030	0	8	Each	Set Screw 10-32 X .188 SS	77839	X
15	IB4 BIN	MA-390246	0	8	Each	SHCS 1/2-20 X 2.5	74618	X

STOCKROOM SIGNATURE [illegible] **ID#** 1268 **DATE** 8/4/04

PARTS DELETED FROM DATABASE **ID#** **DATE**

A COPY OF THIS FORM IS TO BE INCLUDED IN WITH THE TRAVELER

PARTS RECEIVED BY [illegible] **ID#** 4895 **DATE** 8/4/04

PLEASE INDICATE REVISION REQUIRED

	LOCATION	PART #	REV	QTY	UOM	DESCRIPTION	RF #	SIR #
60	IB4 BIN	MB-390270	A	4	Each	Q1/Q3 Transp Restr Adj	76665	X
57	IB4 BIN	MB-390228	0	12	Each	Mounting Flat Washers	80991	X
79	IB 4 BIN	MA-390247	0	4	Each	SHCS 1/2-20 X 3	74622	X
	~~P/N~~	~~ME-390037~~	~~C~~	~~1~~	~~Each~~	~~Corrector MTG Ring~~		
0	~~IB4 BIN~~	~~MD-390667~~	~~0~~	~~1~~	~~Each~~	Q3 Non IP Body Tube Ext Weldment		
9	~~P/N~~	~~ME-390321~~	~~C~~	~~1~~	~~Each~~	~~Q3 IP End Dome Assy~~		
91	R2,S2,L4	MA-390485	0	8	Each	.015 Corrector Shim	79126	X

COPY

ADDITIONAL PARTS REQUEST

ADDITIONAL PARTS REQUEST FORM SHALL BE USED TO ACCESS ALL ITEMS FROM INVENTORY WITH THE EXCEPTION OF PARTS KITS.

THIS FORM MUST BE SIGNED BY AN ACQUISITIONER BEFORE BRINGING TO THE STOCKROOM

MAGNET OR COIL # *LQXC01*

DATE REQUESTED *10/13/04*

BUDGET CODE *300/1.1.1.3.4(LCD)*

JOB TICKET # _____

MACHINE SHOP REQ. # _____

PURCHASE RELEASE # _____

REQUESTED BY *Steve Gould*

DELIVER TO *ICB-Steve Gould*

NEED BY DATE *10/13/04*

MMR # _____

PO # _____

OTHER _____

PARTS STATUS (CHECK ONE)

☐ DEFECTIVE PARTS ISSUED ☐ PARTS SCRAPPED ☐ A/R ITEMS

☐ DEFECTIVE ASSEMBLY ☐ MISSING FROM KIT ALREADY ISSUED

☒ INDIVIDUAL PARTS ☐ CONSUMABLES ☐ PARTS LOST

ACQUISITIONER SIGNATURE Marsha Schmidt **ID#** 4223 **DATE** 10/13/04

PLEASE INDICATE REVISION REQUIRED

IN STOCK	LOCATION	PART #	REV	QTY	UOM	DESCRIPTION	RF #	SIR #
2	R1,1,2	418067-A ✓	A	1	Each	23 Unit Connector	N/A	
22	IB#4-BIN	418113 ✓		1	Each	Grommet	N/A	
23	IB#4-BIN	418112 ✓		1	Each	Clamping Bar	79990	
69	R1,1,2	418109 ✓	A	4	Each	Tie Down Link	N/A	
4	IB#4-BIN	418080 ✓	B	1	Each	Support Arm Weld-Pair	80118	
88	R1,1,2	418116 ✓		4	Each	6-32X3/8" Screw	79892	
144	R1,1,2	418117 ✓		4	Each	4-40X1/2" Screw	79891	
103	IB#4-BIN	418114 ✓	B	4	Each	M3 Stud Assy	81575	

STOCKROOM SIGNATURE [signature] **ID#** 12698 **DATE** 10/13/04

PARTS DELETED FROM DATABASE _____ **ID#** _____ **DATE** _____

A COPY OF THIS FORM IS TO BE INCLUDED IN WITH THE TRAVELER

PARTS RECEIVED BY _____ **ID#** _____ **DATE** _____

ADDITIONAL PARTS REQUEST

ADDITIONAL PARTS REQUEST FORM SHALL BE USED TO ACCESS ALL ITEMS FROM INVENTORY WITH THE EXCEPTION OF PARTS KITS.

THIS FORM MUST BE SIGNED BY AN ACQUISITIONER BEFORE BRINGING TO THE STOCKROOM

MAGNET OR COIL # *LMQXC01*

REQUESTED BY *J. Rife*

DATE REQUESTED *8/5/04*

DELIVER TO *J. Rife - ICB*

BUDGET CODE *LCD 300/1.1.1.3.4*

NEED BY DATE *8/6/04*

JOB TICKET #

MMR #

MACHINE SHOP REQ. #

PO #

PURCHASE RELEASE #

OTHER

PARTS STATUS (CHECK ONE)

- ☐ DEFECTIVE PARTS ISSUED
- ☐ PARTS SCRAPPED
- ☐ A/R ITEMS
- ☐ DEFECTIVE ASSEMBLY
- ☐ MISSING FROM KIT ALREADY ISSUED
- ☒ INDIVIDUAL PARTS
- ☐ CONSUMABLES
- ☐ PARTS LOST

ACQUISITIONER SIGNATURE Marsha Schmidt ID# 4223 DATE 8/5/04

PLEASE INDICATE REVISION REQUIRED

LOCATION	PART #	REV	QTY	UOM	DESCRIPTION	RF #	SIR #
In QC IB 4	ME 390667	-	1	Each	Q3Non IP End Dome	81846	

STOCKROOM SIGNATURE [illegible] ID# 12698 DATE 8/6/04

PARTS DELETED FROM DATABASE ID# DATE

A COPY OF THIS FORM IS TO BE INCLUDED IN WITH THE TRAVELER

PARTS RECEIVED BY ID# DATE

COPY

ADDITIONAL PARTS REQUEST

ADDITIONAL PARTS REQUEST FORM SHALL BE USED TO ACCESS ALL ITEMS FROM INVENTORY WITH THE EXCEPTION OF PARTS KITS.

THIS FORM MUST BE SIGNED BY AN ACQUISITIONER BEFORE BRINGING TO THE STOCKROOM

MAGNET OR COIL # *LQXC01*

REQUESTED BY *Steve Gould*

DATE REQUESTED *10/13/04*

DELIVER TO *ICB-Steve Gould*

BUDGET CODE *300/1.1.1.3.4(LCD)*

NEED BY DATE *10/13/04*

JOB TICKET # _____

MMR # _____

MACHINE SHOP REQ. # _____

PO # _____

PURCHASE RELEASE # _____

OTHER _____

PARTS STATUS (CHECK ONE)

- ☐ DEFECTIVE PARTS ISSUED
- ☐ PARTS SCRAPPED
- ☐ A/R ITEMS
- ☐ DEFECTIVE ASSEMBLY
- ☐ MISSING FROM KIT ALREADY ISSUED
- ☒ INDIVIDUAL PARTS
- ☐ CONSUMABLES
- ☐ PARTS LOST

ACQUISITIONER SIGNATURE Marsha Schmidt **ID#** 4223 **DATE** 10/13/04

PLEASE INDICATE REVISION REQUIRED

	LOCATION	PART #	REV	QTY	UOM	DESCRIPTION	RF #	SIR #
USTOCK 1	*R1,S1,L2*	*418107* ✓	*A*	*1*	*Each*	*23 Unit Male Rack*	N/A	
1341	*R1,1,2*	*418143* ✓		*17*	*Each*	*Anti-Arc Kapton*	N/A	

STOCKROOM SIGNATURE Jeff Bere **ID#** 12698 **DATE** 10/13/04

PARTS DELETED FROM DATABASE _____ **ID#** _____ **DATE** _____

A COPY OF THIS FORM IS TO BE INCLUDED IN WITH THE TRAVELER

PARTS RECEIVED BY _____ **ID#** _____ **DATE** _____

ADDITIONAL PARTS REQUEST

ADDITIONAL PARTS REQUEST FORM SHALL BE USED TO ACCESS ALL ITEMS FROM INVENTORY WITH THE EXCEPTION OF PARTS KITS.

THIS FORM MUST BE SIGNED BY AN ACQUISITIONER BEFORE BRINGING TO THE STOCKROOM

MAGNET OR COIL # MQXC-01 (LMQXCØ1)

DATE REQUESTED 9-27-04

BUDGET CODE 300/1.1.1.3.4

JOB TICKET #

MACHINE SHOP REQ. #

PURCHASE RELEASE #

REQUESTED BY D.Bice

DELIVER TO P/U

NEED BY DATE 9-27-04

MMR #

PO #

OTHER

PARTS STATUS (CHECK ONE)

- ☐ DEFECTIVE PARTS ISSUED
- ☐ DEFECTIVE ASSEMBLY
- ☒ INDIVIDUAL PARTS
- ☐ PARTS SCRAPPED
- ☐ MISSING FROM KIT ALREADY ISSUED
- ☐ CONSUMABLES
- ☐ A/R ITEMS
- ☐ PARTS LOST

ACQUISITIONER SIGNATURE Marsha Edwards **ID#** 9223 **DATE** 9/27/04

PLEASE INDICATE REVISION REQUIRED

LOCATION	PART #	REV	QTY	DESCRIPTION	RF #	SIR #
R2,2,3	MD 430134		1	NIP Bundle Bracket	81942	

Sk 9

COPY

STOCKROOM SIGNATURE D Kelly **ID#** 12304 **DATE** 09-27-04

PARTS DELETED FROM DATABASE **ID#** **DATE**

A COPY OF THIS FORM IS TO BE INCLUDED IN WITH THE TRAVELER

PARTS RECEIVED BY James L. Bice **ID#** 12413 **DATE** 9-27-04

ADDITIONAL PARTS REQUEST

ADDITIONAL PARTS REQUEST FORM SHALL BE USED TO ACCESS ALL ITEMS FROM INVENTORY WITH THE EXCEPTION OF PARTS KITS.

THIS FORM MUST BE SIGNED BY AN ACQUISITIONER BEFORE BRINGING TO THE STOCKROOM

MAGNET OR COIL # *MQXBC-01 (LMQXC01)*

REQUESTED BY *Damon Bice*

DATE REQUESTED *9-17-04*

DELIVER TO *ICB*

BUDGET CODE *300/1.1.1.3.4*

NEED BY DATE *9-17-04*

JOB TICKET # _____

MMR # _____

MACHINE SHOP REQ. # _____

PO # _____

PURCHASE RELEASE # _____

OTHER _____

PARTS STATUS (CHECK ONE)

- ☐ DEFECTIVE PARTS ISSUED
- ☐ PARTS SCRAPPED
- ☐ A/R ITEMS
- ☐ DEFECTIVE ASSEMBLY
- ☐ MISSING FROM KIT ALREADY ISSUED
- ☒ INDIVIDUAL PARTS
- ☐ CONSUMABLES
- ☐ PARTS LOST

ACQUISITIONER SIGNATURE _____ **ID#** _____ **DATE** _____

PLEASE INDICATE REVISION REQUIRED

LOCATION	PART #	REV	QTY	DESCRIPTION	RF #	SIR #
IB#4 BIN	*MA 393089*		*2*	*6-32 Hex Nut*		
IB#4 BIN	*MA 393088*		*2*	*#6 Washer*		
IB#4 BIN	*MA 393082*		*2*	*SHCS #6 -32X 1"*		
IB#4 BIN	*MA 393071*		*4*	*8-32 SHCS .75"*		
IB#4 BIN	*MB 430075*		*2*	*Spider Bumper*		
IB#4 BIN	*MB 430073*		*1*	*Spider Housing Cvr Plate*		
IB#4 BIN	*MB 430055*	*A*	*1*	*Spider housing bottom*		
IB#4 BIN	*MD 430044*	*C*	*1*	*Spider Assembly*		

STOCKROOM SIGNATURE _____ **ID#** _____ **DATE** _____

PARTS DELETED FROM DATABASE _____ **ID#** _____ **DATE** _____

A COPY OF THIS FORM IS TO BE INCLUDED IN WITH THE TRAVELER

PARTS RECEIVED BY _____ **ID#** _____ **DATE** _____

ADDITIONAL PARTS REQUEST

ADDITIONAL PARTS REQUEST FORM SHALL BE USED TO ACCESS ALL ITEMS FROM INVENTORY WITH THE EXCEPTION OF PARTS KITS.

THIS FORM MUST BE SIGNED BY AN ACQUISITIONER BEFORE BRINGING TO THE STOCKROOM

MAGNET OR COIL # *MQXBC03* (LMQXC01)

DATE REQUESTED *9-16-04*

BUDGET CODE *300/1/1/1/3/4*

JOB TICKET # _____

MACHINE SHOP REQ. # _____

PURCHASE RELEASE # _____

REQUESTED BY *Damon Bice*

DELIVER TO *ICB*

NEED BY DATE *9-16-04*

MMR # _____

PO # _____

OTHER _____

PARTS STATUS (CHECK ONE)

- ☐ DEFECTIVE PARTS ISSUED
- ☐ DEFECTIVE ASSEMBLY
- ☒ INDIVIDUAL PARTS
- ☐ PARTS SCRAPPED
- ☐ MISSING FROM KIT ALREADY ISSUED
- ☐ CONSUMABLES
- ☐ A/R ITEMS
- ☐ PARTS LOST

ACQUISITIONER SIGNATURE_____ **ID#**_____ **DATE**_____

PLEASE INDICATE REVISION REQUIRED

LOCATION	PART #	REV	QTY	DESCRIPTION	RF #	SIR #
R2,2,3	*ME 430134*		*1*	*NIP Bundle Bracket*		

STOCKROOM SIGNATURE_____ **ID#**_____ **DATE**_____

PARTS DELETED FROM DATABASE_____ **ID#**_____ **DATE**_____

A COPY OF THIS FORM IS TO BE INCLUDED IN WITH THE TRAVELER

PARTS RECEIVED BY_____ **ID#**_____ **DATE**_____

Revision Request Control Number: 1682

Specification Number: 5520 - TR - 333729 Current Revision: NONE

Traveler or Document Title LHC Q3 LMQXC Module Assembly Traveler

Step #/Description of Revision:

5.0 Modified Step. Modified to reflect production floor process.
9.2 Modified Step. Changed to Crew Chief signoff.
9.3 Modified Step. Changed to Weldor signoff.
12.3 Modified Step. Added "...and Figure 12.0."
15.2 Modified Step. Changed to "Using the Valhalla 4300B, connect 10mA applied voltage thru the corrector Power Leads. Measure Resistance and record in the table below." Modified Table. Added Picture of Corrector Bus Leads.
17.1 Modified Step. Changed (MC-369552) to (MC-369522).
17.4 Modified Step. Changed IP to Non-IP.
17.6 Modified Step. Changed IP to Non-IP.
17.7.2 Modified Step. Changed Non-IP to IP.
17.8 Modified Step. Changed Non-IP to IP.
17.10 Modified Step. Changed Non-IP to IP.
18.9 Added Step. "Tack weld the Extension Tube (MD-390667) to the Cold Mass per (ME-390529)."
18.11 Added Step. "Weld the Extension Tube (MD-390667) to the Cold Mass per (ME-390529)."
19.9 Modified Step. Changed to "Measure the distance between the Suspension Rings at the bottom of the Threaded Rods and record measurements below. Copy this page and place copy in designated book for later reference. (TR-333730, Q3 Cryostat Final Assembly, Step 5.1)."
19.17 Modified Step. Changed Non-IP to IP.
19.18 Modified Step. Removed Center – North and Center – South.
19.21 Removed Step. "Weld the Shielding Blocks (MB-390534) to the Cold Mass per Q3 Suspension System Installation (ME-390525)." No shielding Blocks
19.22 Modified Step. Added 112.5.
19.23 Modified Step. Added 337.5.
21.1 Modified Step. Modified Resistance Table.
21.2 Modified Step. Changed to "Using the Valhalla 4300B, connect 10mA applied voltage thru the corrector Power Leads. Measure Resistance and record in the table below." Modified Table. Added Picture of Corrector Bus Leads.
22.2 Added Step. Added "Assemble/Install Hypertronics Connectors, without Cover at IP End as per Q3 Module Assembly

John Szostak	Jim Rife	11/11/2004
Originator	Responsible Authority	Date
Revision Incorporated into the Traveler:	John Szostak	12/15/2004
	Revision Incorporated By	Date
Process Engineering Final Review:	Bob Jensen	12/15/2004
	Process Engineering/Designee	Date

Instructions for the completion of the Revision Request Form

Note(s):

Multiple steps may be effected by one Revision Request Form but only one specific Traveler or Document may be effected by each Revision Request Form.

If completing this form by hand, a Revision Request Control Number must be obtained before processing.

If completing this form entirely by electronic means, the printed copy to be filed in the Process Engineering Office is to be initialed by the individual incorporating the Revision Request and the individual who reviewed the Traveler or Document.

Originator Instructions:

1) Specification Number: - Enter the Specification Number of the Traveler or Document to be revised. (Document title is inserted automatically from the spec. #)

2) Current Revision: - Enter the Revision of the Traveler or Document to be revised.

3) Step# / Description of the Revision: - Enter a description of the revision to be made and the step# it applies to, if applicable. If needed to describe the revision attach a copy of the page(s). If the revision is coming from a related document such as a Discrepancy Report or an Engineering Order attach a copy of that document to the Revision Request Form.

4) Originator: - Originator is the person generating the form. (Select Name from List)

5) Responsible Authority: - Responsible Authority is person responsible for the process in question. (Select Name from List)

Process Engineering Office Instructions:

1) Revision Incorporated into the Traveler: - Signature of the individual who incorporated the revision.

2) Process Engineering Final Review: - Review the Traveler or Document revised, sign and date the form. The original completed Revision Request Form will be retained by the Process Engineering Office in the Revision Request Binder.

Revision Request Control Number: 1695

Specification Number: 5520 - TR - 333729 Current Revision: A

Traveler or Document Title LHC Q3 LMQXC Module Assembly Traveler

Step #/Description of Revision:

1.6 Added Step. "Protect the bellows during all stages of production." DR No. HGQ-0500.
7.6 Removed Step. Moved to after electrical. New step 7.8.
7.0-17.0 Modified order of steps per production request. (Subsequent changes to steps will reflect new Step Numbers)
7.14 New step. "Splice Cold mass voltage taps to wire bundle. Verify splices electrically." Per LMQXC02.
7.15 New step. "Attach wires using putty and install the Voltage Tap Splice Cover Block (MC-430146)." Per LMQXC02.
9.5 Added Step. "Solder Corrector Wires per Q3 Module Assembly(ME-369900) and as shown in Figure 9.4-A."
9.6 Added Step. "Install voltage taps on MCBXA corrector leads. One tap is to be soldered to the "A" Lead of each corrector element. Wire labels are shown below."
11.12 Modified Step. Added check boxes and specifications for measurements taken with Mini-level.
12.1 Modified Step. Added picture, (ME-369900 - Rev. A, Sheet 3 of 5), per production request.
12.11 Added Step. "Solder MQSX Corrector Wires."
12.13 New Step. "At the IP End, attach Spider Assembly (MD-430072) as per Q3 Module Assembly (ME-369900)."
15.3 New Step. "At the Non-IP End, attach Spider Assembly (MB-430096) as per Q3 Module Assembly (ME-369900)." Per DR No. HGQ-0520.
16.2 Modified Step. Added "Record Initial resistance of Corrector Element and record below." Added column to record initial resistance of Corrector Element.
16.3 Added Step. "Attach Backing Splines as per Q3 Module Assembly (ME-369900)."
16.4 Added Step. "At the IP End (Lead End) wrap the Springboard Assemblies in Kapton and then wrap with Kevlar String (MA-369912) every ½ - ¾" over Kapton as per Q3 Module Assembly (ME-369900)."
16.5 Added Step. "At the Non-IP End (Non-Lead End) wrap the Springboard Assemblies in Kapton and then wrap with Kevlar String (MA-369912) every ½ - ¾" over Kapton as per Q3 Module Assembly (ME-369900)."
17.3 Modified Step. Moved Step per production request. "Position the Beam Tube (MC-369522) longitudinally per Q3 Cold Mass Welded Assembly (ME-390529)." New Step 20.1
19.2 Modified Step. Changed to "Insert the Fixed Support Assembly(ME-390041) into the Vacuum Vessel and position at the IP End."
19.5 Modified Step. Changed to "Insert the Sliding Support Assembly(ME-390042) in to the Vacuum Vessel and position at the Non-IP End."

John Szostak	Jim Rife	1/3/2005
Originator	Responsible Authority	Date
Revision Incorporated into the Traveler:	John Szostak	3/8/2005
	Revision Incorporated By	Date
Process Engineering Final Review:	Jamie Blowers	3/8/2005
	Process Engineering/Designee	Date

Instructions for the completion of the Revision Request Form

Note(s):

Multiple steps may be effected by one Revision Request Form but only one specific Traveler or Document may be effected by each Revision Request Form.

If completing this form by hand, a Revision Request Control Number must be obtained before processing.

If completing this form entirely by electronic means, the printed copy to be filed in the Process Engineering Office is to be initialed by the individual incorporating the Revision Request and the individual who reviewed the Traveler or Document.

Originator Instructions:

1) Specification Number: - Enter the Specification Number of the Traveler or Document to be revised. (Document title is inserted automatically from the spec. #)

2) Current Revision: - Enter the Revision of the Traveler or Document to be revised.

3) Step# / Description of the Revision: - Enter a description of the revision to be made and the step# it applies to, if applicable. If needed to describe the revision attach a copy of the page(s). If the revision is coming from a related document such as a Discrepancy Report or an Engineering Order attach a copy of that document to the Revision Request Form.

4) Originator: - Originator is the person generating the form. (Select Name from List)

5) Responsible Authority: - Responsible Authority is person responsible for the process in question. (Select Name from List)

Process Engineering Office Instructions:

1) Revision Incorporated into the Traveler: - Signature of the individual who incorporated the revision.

2) Process Engineering Final Review: - Review the Traveler or Document revised, sign and date the form. The original completed Revision Request Form will be retained by the Process Engineering Office in the Revision Request Binder.

Traveler Title:	Specification No:	Revision:	DR No:
LHC Q3 LMQXC Module Assembly Traveler	5520-TR-333729	NONE	4043

Step No:	Drawing No:	Routing Form No:	Serial No:	Rework ID:
8.0	ME-369900		LMQXC01	0

Discrepancy Description:

During the power lead splicing process one of the leads on the MCBX corrector insert corrector broke off.

Originator: Jim Rife

Date: 8/20/2004

Cause of Nonconformance:

Unknown at this time. Lead was probably damaged before installation process had begun.

Responsible Authority: Rodger Bossert

Date: 12/27/2004

Disposition:

(Re-issued 333729 - Step 7.15 (LMQXC01-1)) Corrrector #HCMCBX_001-SI000008 was removed and replaced with corrector #HCMCBX_001-SI000018.

Responsible Authority: Rodger Bossert

Date: 12/27/2004

Corrective Action to Prevent Recurrence:

A fix to this corrector will be determined at a later time. Inform manufacturer of problem.

Responsible Authority: Rodger Bossert

Date: 12/27/2004

Corrective Action/Disposition Verified By: John Szostak

Date: 1/19/2005

Will Configuration be affected?: ☐ YES ☑ NO

Identified problem area:

☑ Material ☐ Manpower ☐ Method ☐ Machine ☐ Measurement

Reviewed By: Bob Jensen

Date: 9/7/2005 3:12:29 PM

7.14 Mount the MQSX Corrector Mounting Ring (MD-390209) to the MQSX Corrector Magnet.

N/A
Technician(s) Date

7.15 Position and align the MQSX Corrector Magnet per Q3 Cold Mass Welded Assembly (ME-390529).

Technician(s) 8/16/04
Date

7.16 Tack weld the MQSX Corrector Mounting Ring (MD-309209) to the Q3 Cold Mass Assembly (ME-390528) per Q3 Cold Mass Welded Assembly (ME-390529).

N/A
Weldor Date

7.17 Weld the MQSX Corrector Mounting Ring (MD-309209) to the Q3 Cold Mass Assembly (ME-390528) Lead End per Q3 Cold Mass Welded Assembly (ME-390529).

N/A
Weldor Date

7.18 Disassemble the MQSX Corrector Magnet from the MQSX Corrector Mounting Ring (MD-309209).

N/A
Technician(s) Date

8.0 Splicing the Power Leads

8.1 Set up the Power Leads for splicing as shown in the Q3 Module Assembly Drawing (ME-369900).

N/A
Technician(s) Date

8.2 Construct / Obtain Expansion Loop Tail per Drawing (MX-430XXX).

N/A
Technician(s) Date

8.3 Solder the Upper Magnet Lead (Terminal "A", Quadrant 4) to the Lower 8kA Bus as per Q3 Module Assembly Drawing (ME-369900).

N/A
Technician(s) Date

8.4 Solder the Lower Lead to the expansion Loop Tail from Step 8.2 as per Q3 Module Assembly Drawing (ME-369900).

N/A
Technician(s) Date

8.5 Insulate each splice with 2/3 overlap. .002 x 3/8 wide kapton, (MA-292722).

N/A
Technician(s) Date

8.6 Insert a piece of .005 kapton between splices.

N/A
Technician(s) Date

8.7 Put splices together and insulate splice area with ¾ overlap, .002 x 3/8 wide Kapton (MA-292722).

N/A
Technician(s) Date

8.8 Attach Q3 Bus Splice Clamp Assembly (MD-430031) to Q3 Lead as per Q3 Module Assembly (ME-369900).

N/A
Technician(s) Date

Correction Coil Splice Block

Looking from Q3 to DFBX

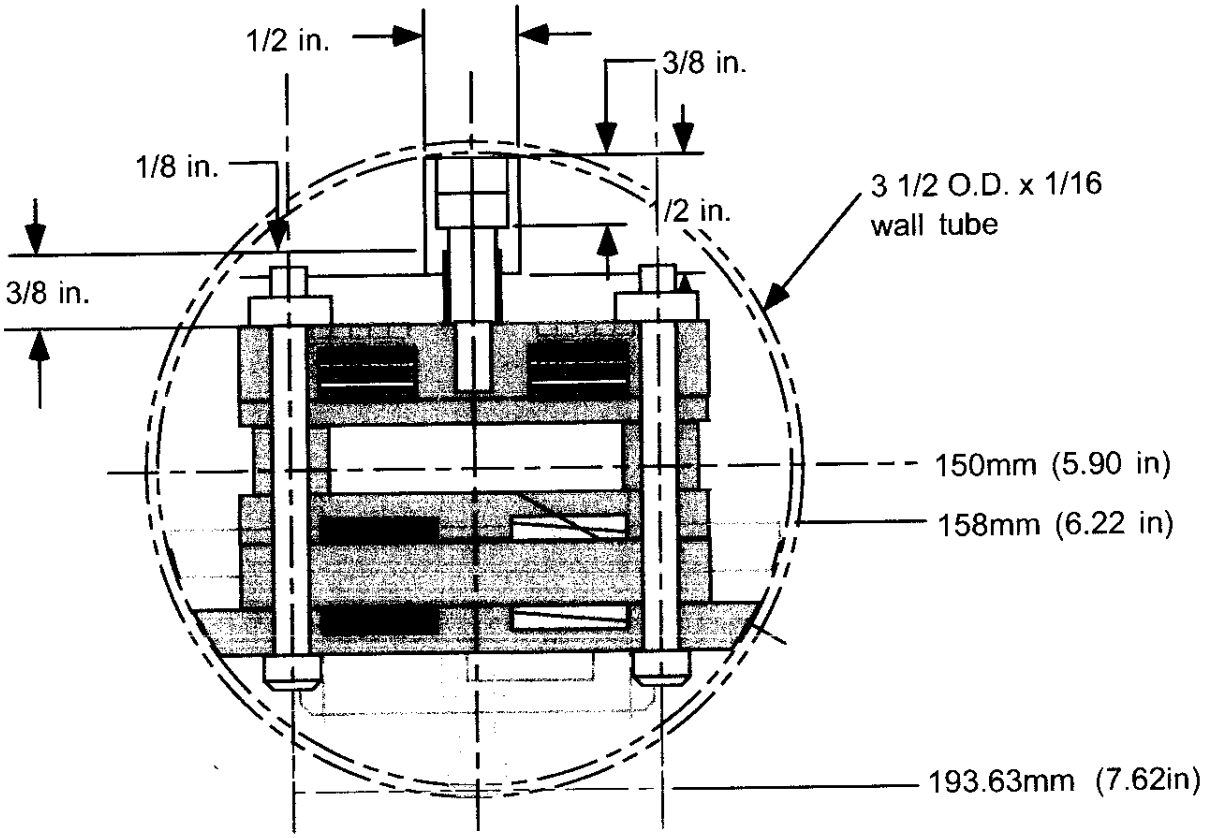

Cross Section at spider exiting Q3 to go to DFBX

R. Bossert 2-20-03

LQXC-01

Step 15.2

Corrector Assembly	Corrector Element	Readout	Labels	Power Labels	Resistance
MQSX	MQSX	A2A	EE8223	A2A, A2B	57.6
		EE8223	A2B		7.71
		A2A	A2B		7.77
MCBXA	MCBXV	V3A	EE8113	V3A, V3B	18.7
		EE8113	V3B		17.46
		V3A	V3B		17.47
	MCBXH	H3A	EE8123	H3A, H3B	14.1
		EE8123	H3B		21.38
		H3A	H3B		21.39
	MCTX	B6A	EE8613	B6A, B6B	14.8
		EE8613	B6B		99.88
		B6A	B6B		99.89
	MCSX	B3A	EE8313	B3A, B3B	17.8
		EE8313	B3B		27.57
		B3A	B3B		27.59
MCSOX	MCOSX	A4A	EE8423	A4A, A4B	13.1
		EE8423	A4B		11896
		A4A	A4B		11911
	MCOX	B4A	EE8413	B4A, B4B	13.5
		EE8413	B4B		12866
		B4A	B4B		12881
	MCSSX	A3A	EE8323	A3A, A3B	11.1
		EE8323	A3B		13379
		A3A	A3B		13391

Technician: L Rice

Date: 10-2-04

1 STRAND x 10' Corrector = 17.6mΩ
1.76mΩ/ft.

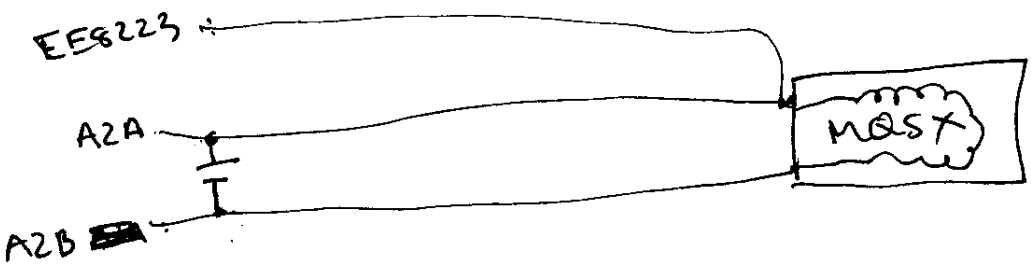

LMQXCB1

step
21,2

Corrector Assembly	Corrector Element	Readout	Labels	Power Labels	Resistance
MQSX	MQSX	A2A	EE8223	A2A, A2B	57.6
		EE8223	A2B		7.71
		A2A	A2B		7.77
MCBXA	MCBXV	V3A	EE8113	V3A, V3B	189
		EE8113	V3B		17.55
		V3A	V3B		17.57
	MCBXH	H3A	EE8123	H3A, H3B	13.9
		EE8123	H3B		21.49
		H3A	H3B		21.51
	MCTX	B6A	EE8613	B6A, B6B	14.7
		EE8613	B6B		99.87
		B6A	B6B		99.88
	MCSX	B3A	EE8313	B3A, B3B	17.8
		EE8313	B3B		27.56
		B3A	B3B		27.59
MCSOX	MCOSX	A4A	EE8423	A4A, A4B	13.2
		EE8423	A4B		11899
		A4A	A4B		11912
	MCOX	B4A	EE8413	B4A, B4B	13.5
		EE8413	B4B		12866
		B4A	B4B		12881
	MCSSX	A3A	EE8323	A3A, A3B	11.1
		EE8323	A3B		13380
		A3A	A3B		13390

LMQXC01

FERMILAB
ENGINEERING NOTE

SECTION	PROJECT	SERIAL-CATEGORY	PAGE

SUBJECT

NAME

DATE

REVISION DATE

Table for F

Corrector Assembly	Corrector Element	(Readout) Labels		Res.	Power Labels
MQSX	MQSX	A2A	EE8223	57.6	A2A A2B
		EE8223	A2B	7.71	
		A2A	A2B	7.77	
MCBXA	MCBXV	V3A	EE8113	18.7	V3A V3B
		EE8113	V3B	17.46	
		V3A	V3B	17.47	
	MCBXH	H3A	EE8123	19.1	
		EE8123	H3B	21.38	
		H3A	H3B	21.39	
	MCTX	B6A	EE8613	480	
		EE8613	B6B	99.88	
		B6A	B6B	99.89	
	MCSX	B3A	EE8313	17.8	
		EE8313	B3B	27.57	
		B3A	B3B	27.59	
MCSOX	MCOSX	A4A	EE8423	13.1	
		EE8423	A4B	11896	
		A4A	A4B	11911	
	MCOX	B4A	EE8413	135	
		EE8413	B4B	12866	
		B4A	B4B	12881	
	MCSSX	A3A	EE8323	11.1	
		EE8323	A3B	13379	
		A3A	A3B	13391	

LMPXC01

G Hipot. Hipots are done at 3KV, with the same slow ramp rate as Q2. Flat top (?) can be determined by Mike Lamm.

There are four hipots:

Step 21.3

	Hi Potential (3000V)	Grounded	Leakage
	8L	everything else	.013 μA
	5L	everything else	.019 μA
	5U	everything else	.024 μA
(Coil-Gnd, Coil-St H)	8U	everything else	.178 μA
(St H-Gnd, St H-Coil)	Strip Heaters	everything else	.238 μA

LMQXC01

Final Q3 Corrector and Bus Hipots

Looking into non-IP end of Q3

Looking from DFBX to Q3

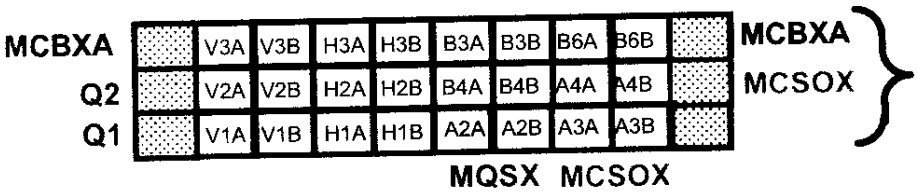

This shows the corrector bus in its final configuration as it enters the DFBX

Need to verify that there is no continuity between any of these paths

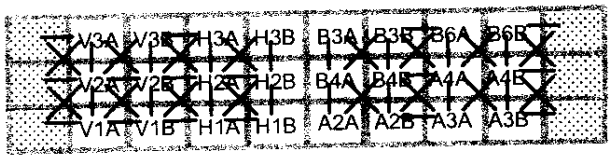

R. Bossert 10-7-04

Hipot #1

.071

Red - 500V
Grey - 0V

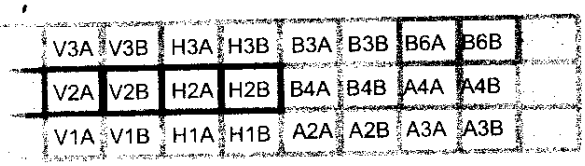

After Hipot #1

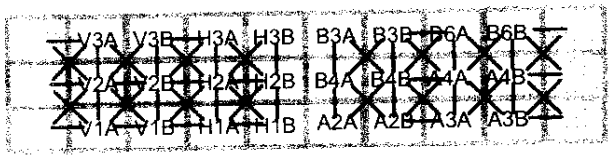

Hipot #2

.045 μA

Red - 500V
Grey - 0V

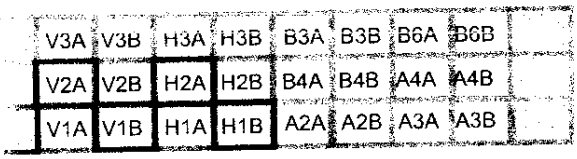

After Hipot #2

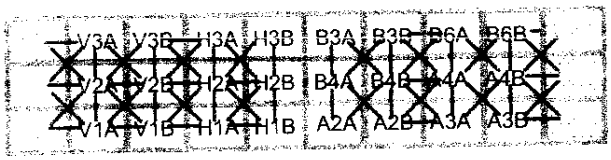

Hipot #3

.056 μA

Red - 500V
Grey - 0V

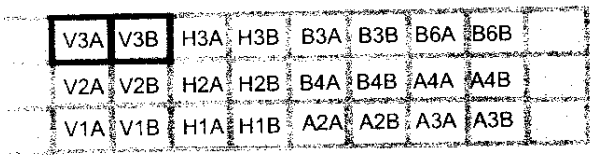

After Hipot #3

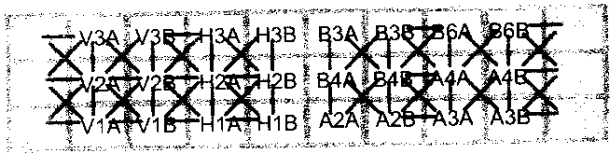

Hipot #4

.074 μA

Red - 500V
Grey - 0V

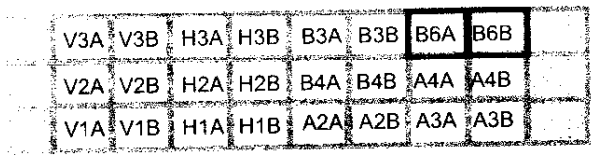

After Hipot #4

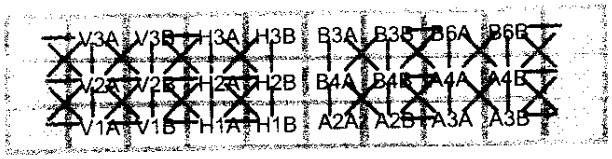

Hipot #5

.020 μA

Red - 500V
Grey - 0V

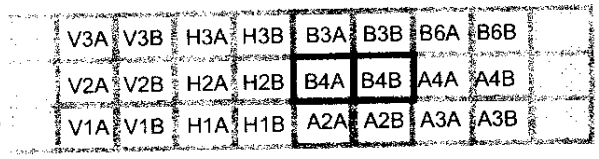

After Hipot #5

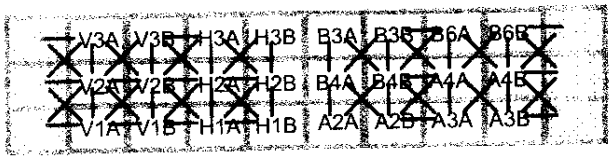

Hipot #6

.025 μA

Red - 500V
Grey - 0V

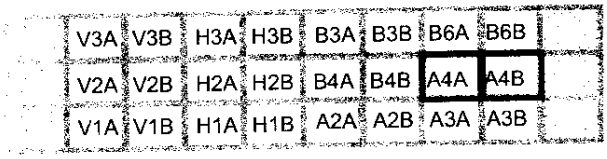

After Hipot #6

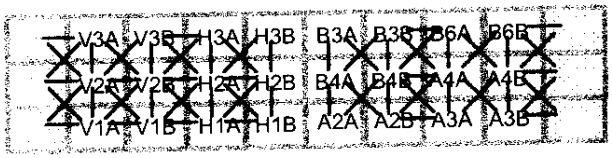

Hipot #7

.039 μA

Red - 500V
Grey - 0V

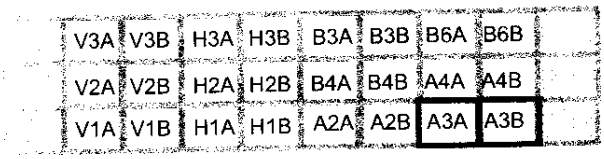

After Hipot #7

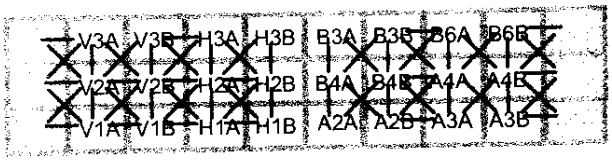

LMQXC01

3L + 5L to gr'n w/ EVERYTHING GROUNDED

@ 3000 V x 50 VPS

.189 μA

MDXC-01

9-30-04

		Continuity?
5L	5L	Yes
	5U	No
	8L	No
	8U	No

		Continuity?
5U	5U	Yes
	8L	No
	8U	No

		Continuity?
8L	8L	Yes
	8U	No

		Continuity?
8U	8U	Yes

Wire Name	Continuity?
V3A	Y
V3B	Y
H3A	Y
H3B	Y
B3A	Y
B3B	Y
B6A	Y
B6B	Y
V2A	Y
V2B	Y
H2A	Y
H2B	Y

Wire Name	Continuity?
B4A	Y
B4B	Y
A4A	Y
A4B	Y
V1A	Y
V1B	Y
H1A	Y
H1B	Y
A2A	Y
A2B	Y
A3A	Y
A3B	Y

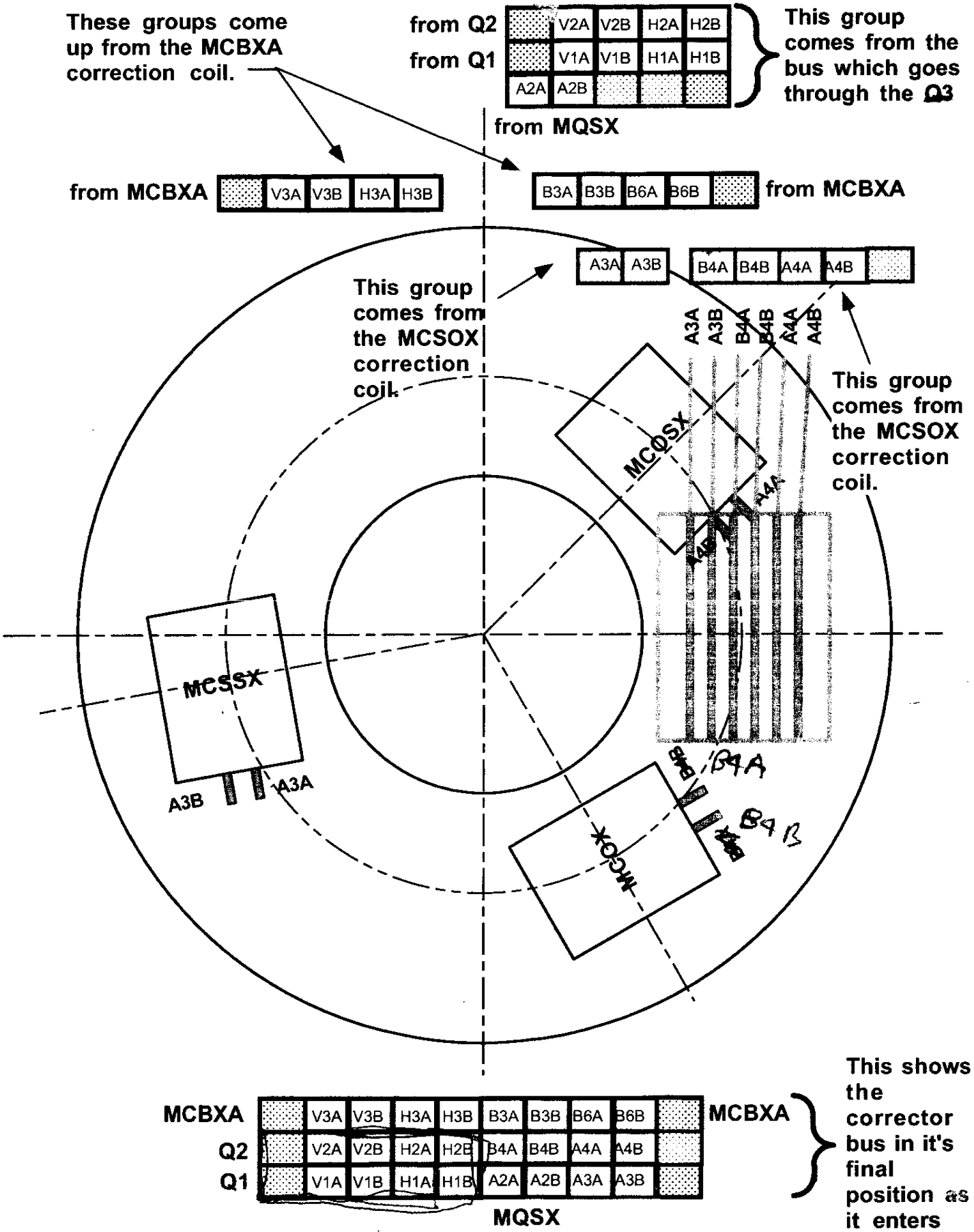

R. Bossert 5-26-04
Rev. A 7-29-04

Looking into non-IP end of Q3

Looking into end of correction coil from DFBX to Q3

CERN LHC MQXA

Acceptance Test at FNAL

QUALITY RECORD

Cryogenics Science Center

KEK, High Energy Accelerator Research Organization

Magnet ID :_____

Date of approval :_____

Approved by :_____ (FNAL)

:_____ (KEK)

Ver. 0

Ver A (with initial results)

1. Appearance Check

Procedure	Criteria
Check appearance of the magnet by visual inspection.	No harmful defects or deformation
Result at TOSHIBA	
Acceptable	
Result at FNAL	
ACCEPTABLE	

2. Interface Dimensions

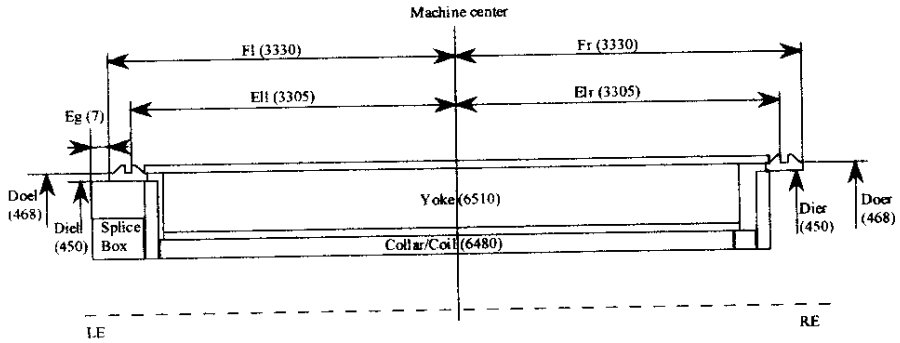

1) Dimensions	Unit:mm
Procedure	**Criteria**
1) Dimension Check Measure following dimensions a, b, c : Measuring range: every 45 deg. from 0 deg. d : Splice Box : four points	
a) Machine center - Interface	a) 3330 –6/+0
b) Interface outer diameter (Doel,Doer)	b) ϕ468 –4/+0
c) Interface inner diameter (Diel,Dier)	c) ϕ450 –4/+0
d) End Ring - Splice box(Eg)	d) 7 -5/+5

Result at TOSHIBA

Critera	3330 -6/+0		ϕ468 -4/+0		ϕ450 -4/+0		7
Position	Fl	Fr	Doel	Doer	Diel	Dier	Eg
0 deg.	3329.5	3330.0	467.74	467.39	450.48	450.36	5.42
45 deg.	3329.5	3330.0	466.69	466.89	449.90	449.67	
90 deg.	3330.0	3330.0	466.50	466.83	449.58	449.66	5.55
135 deg.	3330.0	3329.5	466.87	466.98	450.01	449.99	
180 deg.	3329.5	3329.5					4.39
225 deg.	3329.5	3329.5					
270 deg.	3330.0	3330.0					5.77
315 deg.	3329.5	3330.0					
Result	Acceptable		Acceptable		Acceptable		Acceptable

Result at FNAL

Critera	3330 -6/+0		ϕ468 -4/+0		ϕ450 -4/+0		7
Position	Fl	Fr	Doel	Doer	Diel	Dier	Eg
0 deg.	3330	3330			PASS		PASS
45 deg.							
90 deg.	3330	3330			PASS		PASS
135 deg.							
180 deg.	3330	3330					PASS
225 deg.							
270 deg.	3330	3330					PASS
315 deg.							
Result							

2) End ring interface		
Procedure		Criteria
Check the weld edge preparation using ϕ449 +0/-0.02 gauge.		1) The gauge shall be inserted into the end ring. 2) Measurement data will be reported if the gage cannot be inserted.
Measurement part	Result at TOSHIBA	Remarks
LE side	Acceptable	-------
RE side	Acceptable	------
Measurement part	Result at FNAL	Remarks
LE side		
RE side		

3) Radial envelope	
Procedure	Criteria
Check shell radial envelope using ϕ530mm gauge. (dummy cold-mass support)	The gauge shall pass the magnet.
Result at TOSHIBA	
Acceptable	
Result at FNAL	

4) Magnet bore	
Procedure	Criteria
Check appearance of the magnet bore by visual inspection.	No harmful defects or deformation
Result at TOSHIBA	
Acceptable MIP Cap was damaged at end section (LE side and RE side)	
Result at FNAL	

5) Magnet bus slot	
Procedure	Criteria
Check the bus slot using bus line model gauge.	The gauge shall pass the magnet bus slot.
Result at TOSHIBA	
Acceptable	
Result at FNAL	

6) Weight	
Procedure	Criteria
Measure the magnet weight.	Weight < 8500kg
Result at TOSHIBA	
8320Kg	Acceptable
Result at FNAL	

7) Length of magnet lead, QPH wire, Voltage taps		
Procedure	Criteria	
Check the lengths of magnet lead, QPH wire, voltage taps.	1) Magnet lead : > 500mm from magnet LE end plate 2) Voltage taps wire : > 2000mm from magnet LE end plate 3) QPH wire : >2000mm from magnet LE end plate	
Result at TOSHIBA		
Measuring wire	Measured Value	Result
1) Magnet lead	>500mm	Acceptable
2) Voltage taps	>2000mm	Acceptable
3) QPH wire	>2000mm	Acceptable
Result at FNAL		
Measuring wire	Measured Value	Result
1) Magnet lead		
2) Voltage taps		
3) QPH wire		

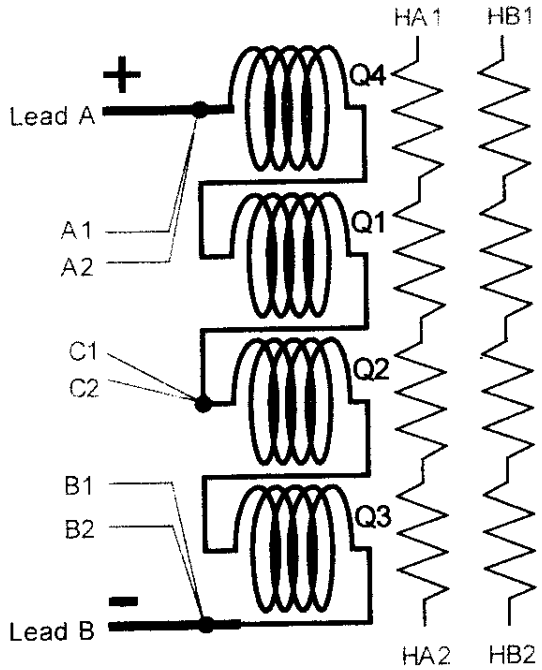

8) Cable tags	
Procedure	Criteria
Check the cable tags.	Consistent to the tag No. table.

[illegible]	[illegible]	[illegible]
[illegible]	[illegible]	[illegible]
	[illegible]	[illegible]
	[illegible]	[illegible]
[illegible]	[illegible]	[illegible]
	[illegible]	[illegible]

Result at TOSHIBA	
1)Voltage taps	Acceptable
2)Quench heaters	Acceptable
Result at FNAL	
1)Voltage taps	ACCEPTABLE
2)Quench heaters	ACCEPTABLE

3. Coil Resistance

Procedure	Criteria
Measure the magnet total resistance and coil temperature at coil current of DC1A. Calculate resistance at 20 °C; R_{20}. $R_{20}=V/I/(1+0.00393*(T_{coil}-20))$ V : Voltage between magnet leads (V) I : Coil current obtained by shut resistor (A) T_{coil} : coil temperature (°C)	1) Compare with R_{20} at TOSHIBA. Variation of R_{20} < 0.005 Ω 2) Voltage taps(C-A, C-B): Measurement Only

Result at TOSHIBA

T_{coil}	Not Reported	
Magnet total voltage (V)	Current (A)	Magnet total resistance R_{20} (Ω)
Not Reported	Not Reported	6.79885

Voltage taps tag No.	V (V)	I (A)	R_{20} (Ω)	Voltage taps tag No.	V (V)	I (A)	R_{20} (Ω)
C1 - A1	Not Reported	Not Reported	3.39675	C2 - A1	Not Reported	Not Reported	3.39675
C1 - A2	Not Reported	Not Reported	3.39675	C2 - A2	Not Reported	Not Reported	3.39675
C1 - B1	Not Reported	Not Reported	3.39685	C2 - B1	Not Reported	Not Reported	3.39685
C1 - B2	Not Reported	Not Reported	3.39685	C2 - B2	Not Reported	Not Reported	3.39685

Acceptable

Result at FNAL

T_{coil}		6.856	
Magnet total voltage (V)	Current (A)	Magnet total resistance R_{20} (Ω)	Variation (Ω) ($R_{20\text{-TOSHIBA}}$ - $R_{20\text{-FNAL}}$)
Voltage taps tag No.	R_{20} (Ω)	Voltage taps tag No.	R_{20} (Ω)
C1 - A1	3.426	C2 - A1	3.427
C1 - A2	3.427	C2 - A2	3.427
C1 - B1	3.426	C2 - B1	3.426
C1 - B2	3.426	C2 - B2	3.426

4. Instrumentations

1) Voltage taps

Procedure	Criteria
Check resistance of all voltage taps by four terminal method at 1A. Magnet lead : Q4 4th : + Magnet lead : Q3 3rd : -	Magnet lead + : A1, A2 (Pole4 Out) Magnet lead - : B1, B2 (Pole3 Out) Center taps : C1, C2 (Pole1 Out) Variation of R_{20}(A1),R_{20}(A2) : < 0.1% Variation of R_{20}(B1),R_{20}(B2) : < 0.1% Variation of R_{20}(C1),R_{20}(C2) : < 0.1%

Result at TOSHIBA

Voltage taps No.	Resistance(Ω)	Voltage taps No.	Resistance(Ω)	Variation(%)	Result
A1	0.00268	A2	0.00268	0.00	Acceptable
C1	3.39952	C2	3.39952	0.00	Acceptable
B1	6.79637	B2	6.79637	0.00	Acceptable

Result at FNAL

Voltage taps No.	Resistance(Ω)	Voltage taps No.	Resistance(Ω)	Variation(%)	Result
A1	.0026	A2	.0026		
C1	3.434	C2	3.434		
B1	6.841	B2	6.84		

2) QPH

Procedure	Criteria
Measure the resistance of QPH.	QPH resistance : 30 +4/-4Ω (HA,HB)

Result at TOSHIBA

QPH No.	QPH Resistance(Ω)	Result
HA	29.9	Acceptable
HB	29.9	Acceptable

Result at FNAL

QPH No.	QPH Resistance(Ω)	Result
HA	29.65	ACCEPTABLE
HB	29.63	ACCEPTABLE

5. Coil Inductance

Procedure	Criteria
Measure inductance of magnet at frequencies of 100Hz and 1kHz using LCR meter.	1) Variation of inductance Voltage taps No. C-A, inductance Voltage taps No. C-B : < 5% 2) Total inductance of the magnet :Measurement only

Result at TOSHIBA

Voltage taps tag No.	100Hz	Result (%)	1kHz	Result (%)	Voltage taps tag No.	100Hz	Result (%)	1kHz	Result (%)
C1 - A1	36.95	0.03	13.256	0.18	C2 - A1	36.95	0.03	13.256	0.18
C1 - A2	36.95		13.256		C2 - A2	36.95		13.256	
C1 - B1	36.94		13.280		C2 - B1	36.94		13.280	
C1 - B2	36.94		13.280		C2 - B2	36.94		13.280	

	100Hz	1kHz
Magnet	87.01	30.83

Acceptable

Result at FNAL

Voltage taps tag No.	100Hz	Result (%)	1kHz	Result (%)	Voltage taps tag No.	100Hz	Result (%)	1kHz	Result (%)
C1 - A1	37.0		13.308		C2 - A1	37.0		13.307	
C1 - A2	37.0		13.308		C2 - A2	37.1		13.308	
C1 - B1	36.99		13.317		C2 - B1	36.99		13.317	
C1 - B2	36.99		13.317		C2 - B2	36.99		13.317	

	100Hz	1kHz
Magnet	87.12	31.269

6. Turn to Turn Insulation

Procedure	Criteria
Apply impulse voltage of 1000V between the magnet leads and record the signal. Instrumentation: Impulse generator, recorder	Compare the signal with one at KEK. Attach rthe chart.
Result at TOSHIBA	
Acceptable	See appendix
Result at FNAL	

7. Coil Insulation

1) Insulation Resistance			
Procedure		Criteria	
Apply 1kV-DC to the coil in 1 min. and measure insulation resistance by using insulation tester. High voltage : Coils Ground : Collar, Yoke, Shell, QPH		Insulation resistance > 100MΩ	
Result at TOSHIBA			
Temperature(°C)	Humidity(%)	Insulation(MΩ)	Result
22	67	> 2000	Acceptable
Result at FNAL			
Temperature(°C)	Humidity(%)	Insulation(MΩ)	Result

2) Hi-pot test			
Procedure		Criteria	
Apply 3kV-DC to the coil in 1 min. and measure leak current or insulation resistance. High voltage : Coil Ground : Collar, Yoke, Shell, QPH		No break down Record leak current or resistance.	
Result at TOSHIBA			
Temperature (°C)	Humidity (%)	Leak current (mA)	Result
22	67	0.00	Acceptable
Result at FNAL			
Temperature (°C)	Humidity (%)	Leak current or resistance	Result

8. QPH Insulation

1) Insulation Resistance

Procedure	Criteria
Apply 1kV-DC to the QPH in 1 min. and measure insulation resistance by using insulation tester. High voltage : QPH Ground : Coil, Collar, Yoke, Shell	Insulation resistance > 100MΩ

Result at TOSHIBA

Heater No.	Temperature (°C)	Humidity (%)	Insulation(MΩ)	Result
HA	22	67	> 2000	Acceptable
HB			> 2000	Acceptable

Result at FNAL

Heater No.	Temperature (°C)	Humidity (%)	Insulation(MΩ)	Result
HA				
HB				

2) Hi-pot test

Procedure	Criteria
Apply 3kV-DC to the QPH in 1 min. and measure leak current or insulation resistance. High voltage : QPH Ground : Coil, Collar, Yoke, Shell	No break down Record leak current or resistance.

Result at TOSHIBA

Heater No.	Temperature (°C)	Humidity (%)	Leak current (mA)	Result
HA	22	67	0.00	Acceptable
HB			0.00	Acceptable

Result at FNAL

Heater No.	Temperature (°C)	Humidity (%)	Leak current or resistance	Result
HA				
HB				

9. QPH Discharge Test

1) Appearance check	
Procedure	Criteria
Check appearance of QPH wires by visual inspection.	No harmful defects or deformation.
Result at TOSHIBA	
Acceptable	
Result at FNAL	

2) QPH discharge test		
Procedure		Criteria
Charge the power supply above 850 V and fire QPHs.		No strange signal observed. Attach the chart.
Result at TOSHIBA		
HA	Acceptable	See appendix
HB	Acceptable	See appendix

3) QPH resistance				
Procedure		Criteria		
Measure resistance before/after the discharge test.		Resistance change < 10%		
Result at TOSHIBA				
QPH No.	Before (Ω)	After (Ω)	Variation (%)	Result
HA	29.9	29.9	0.0	Acceptable
HB	29.9	29.9	0.0	Acceptable
Result at FNAL				
QPH No.	Before (Ω)	After (Ω)	Variation (%)	Result
HA				
HB				

CERN
CH-1211 Geneva 23
Switzerland

the **Large Hadron Collider** project

AT MEL Document No.
LHC-MQSX-FR-0001 rev. **1.0**
EDMS Document No.

Certificate of Conformity

Part name:	MQSX Inner Triplet Skew Quadrupole Corrector		
LHC Identification No.:	HCMQSX_001-AN000001	Serial No.:	**HCMQSX_001-AN000001**
Shipped To:	CERN	***Shipment No:***	***01***
		Shipment	***30/05/03***
Manufacturer:	Ansaldo	***Order No.:***	CD1000630
Related tech. Specification:	LHC-MQSXA-CI-0001 and addenda		
Related drawings:	LHCMQSXA0020 (620RM9829)		
Responsible person at CERN:	Mikko Karppinen	***Tel.***	+41 22 767 4305
		E-mail.	Mikko.Karppinen@cern.ch
Responsible person at Ansaldo:	Gianluigi Gaggero	***Tel.***	+39 010 6489 210
		E-mail.	gaggero.gianluigi@as-g.it
Ansaldo certifies that the delivered material conforms to the technical specification mentioned above:			
Date: 29/05/03	***Name: G. Gaggero***		***Signature:*** *Gianluigi Gaggero*

Acceptance test results

		MQSX	***Remarks:***
RT dc resistance (Ω):	***Ansaldo:***	***7.85***	
	CERN:	***7.59***	
	CMA[1]:		
Inductance @1 kHz/100 Hz (mH)	***Ansaldo:***	***14.28 / 14.14***	
	CERN	***14.14 / 14.14***	
	CMA:		
R.T. leakage current to ground @ 1.5 kV (μA):	***Ansaldo:***	***0.089***	
	CERN:	***0.025***	
	CMA:		

	Cold Mass Assembler
Visual inspection	
Name / Signature	
Date	

Accepted: ☑

Rejected: ☐

[1] Cold Mass Assembler

Comments (Ansaldo):	

Comments (CERN):	***Magnetic axis have not been measured at warm.***
	Scribe line made relative to the dowel pin holes on the conn. plate.

Comments (CMA):	

CERN
CH-1211 Geneva 23
Switzerland

the **Large Hadron Collider** project

AT MEL Document No.
LHC-MCSOX-FR-0001 rev. **1.0**

EDMS Document No.

Certificate of Conformity

Part name:	MCSOX Inner Triplet Corrector Package		
LHC Identification No.:	HCMCSOX001-AN000001	Serial No.:	**HCMCSOX001-AN000001**
Shipped To:	CERN	***Shipment No:***	***01***
		Shipment	***30/05/03***
Manufacturer:	Ansaldo	***Order No.:***	CD1000630
Related tech. Specification:	LHC-MQSXA-CI-0001 and addenda		
Related drawings:	LHCMQSXA0020 (620RM9829)		
Responsible person at CERN:	Mikko Karppinen	***Tel.***	+41 22 767 4305
		E-mail.	Mikko.Karppinen@cern.ch
Responsible person at Ansaldo:	Gianluigi Gaggero	***Tel.***	+39 010 6489 210
		E-mail.	gaggero.gianluigi@as-g.it
Ansaldo certifies that the delivered material conforms to the technical specification mentioned above:			
Date: 29/05/03	***Name: G. Gaggero***		***Signature:*** *Gianluigi Gaggero*

Acceptance test results

		MCOSX	***MCOX***	***MCSSX***	***Remarks:***
RT dc resistance (Ω):	***Ansaldo:***	***12.24***	***13.23***	***13.17***	
	CERN:	***11.87***	***12.84***	***13.36***	
	CMA[1]:				
Inductance @1 kHz/100 Hz (mH)	***Ansaldo:***	***3.33*** ***3.33***	***4.54*** ***4.53***	***7.88*** ***7.87***	
	CERN	***3.33*** ***3.33***	***4.54*** ***4.54***	***7.87*** ***7.87***	
	CMA:				
R.T. leakage current to ground @ 1.5 kV (μA):	***Ansaldo:***	***0.32***	***0.26***	***0.56***	
	CERN:	***0.046***	***0.035***	***0.042***	
	CMA:				

	Cold Mass Assembler
Visual inspection	
Name / Signature	
Date	

Accepted: ☒

Rejected: ☐

Comments (Ansaldo):	

Comments (CERN):	***Magnetic axis have not been measured at warm.***
	Scribe line made relative to the dowel pin holes on the conn. plate.

Comments (CMA):	

Cryogenic Thermometer Traveller

DESCRIPTION

Part description:	Cryogenic thermometer	Top Assembly Identification:	LMQXC01
Part Identification:	HCQITESCXT-CR012470	Manufactured By:	Fermilab
Serial Number:	CX_LS_X16791		

Q3-NLE NON-IST BUS SIDE J.REE 7/30/04

CABLING

Connector Tag Name: TT8323

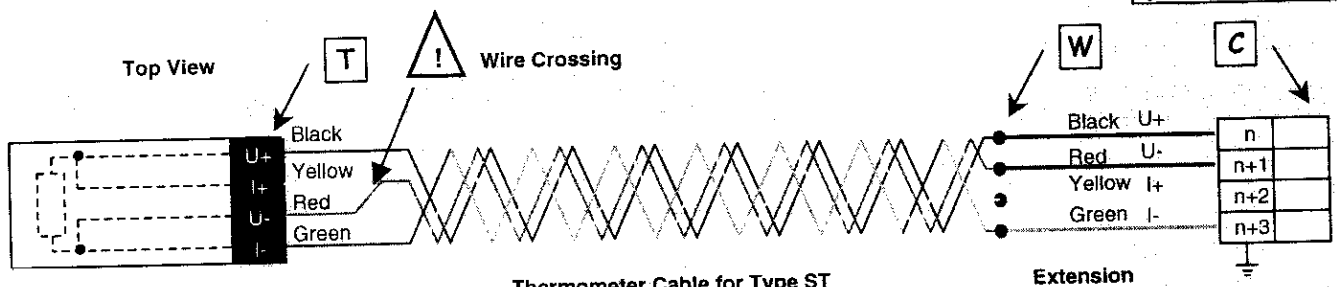

Fixing Case

Thread ☐
Hole ☐
Stud ☐

Thermometer Cable for Type ST

ρ (300 K) = 0.32 Ohm/m
Copper AWG 30
Length = ☐ m

Extension

ρ (300 K) = 0.07 Ohm/m
Copper AWG 24
Length: 0.8 m

CHECKS

Intervention	Date/ DD-MMM-YYYY	Check Point	R(U+,U-,I+,I-) [Ohm] 4W	R(U-,I-) [Ohm] 2W	R(U+,I+) [Ohm] 2W	R(U+,GND) [Ohm] 2W	Temperature [K]	Firm/Laboratory	Checked by
Calibration	21-Jan-2002	T	67.25	n.a	n.a	OVL	Ambient	IPN	Joly
Expedition	12-Mar-2003	T	65.556	0.1	0.1	OVL	293	CERN	Grivat
Reception	30 Jul 04	T W C	66.945				75°F	Fermi	Evans
		T W C							
		T W C							
		T W C							
		T W C							
		T W C							
		T W C							
		T W C							
		T W C							
		T W C							
		T W C							
		T W C							
		T W C							
		T W C							
		T W C							
		T W C							
		T W C							
		T W C							
		T W C							
		T W C							
		T W C							
		T W C							
		T W C							
		T W C							
		T W C							

Cryogenic Thermometer Traveller

DESCRIPTION

Part description:	Cryogenic thermometer	Top Assembly Identification:	LMQXC01
Part Identification:	HCQITESCXT-CR012460	Manufactured By:	Fermilab
Serial Number:	CX_LS_X16790		

Q3 NLE INST BUS SIDE J. RIFE 7/30/04

CABLING

Connector Tag Name: TT8313

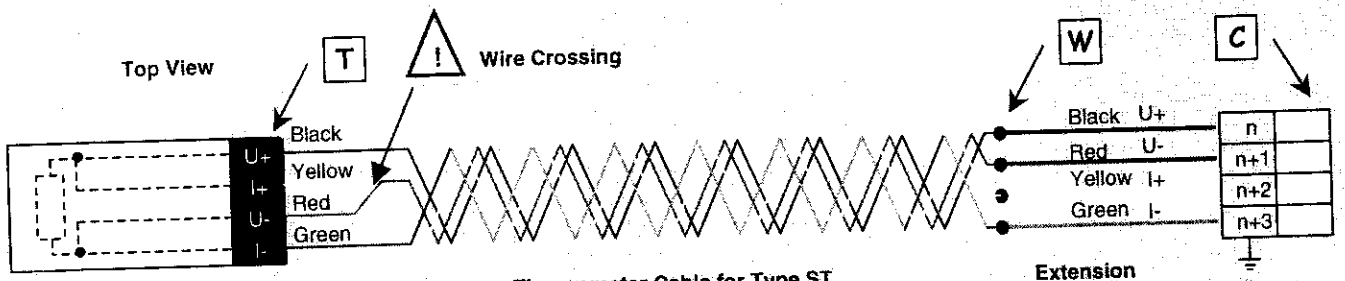

Fixing Case

Thread ☐
Hole ☐
Stud ☐

Thermometer Cable for Type ST

ρ (300 K) = 0.32 Ohm/m
Copper AWG 30
Length = ☐ m

Extension

ρ (300 K) = 0.07 Ohm/m
Copper AWG 24
Length: 0.8 m

CHECKS

Intervention	Date/ DD-MMM-YYYY	Check Point	R(U+,U-,I+,I-) [Ohm] 4W	R(U-,I-) [Ohm] 2W	R(U+,I+) [Ohm] 2W	R(U+,GND) [Ohm] 2W	Temperature [K]	Firm/Laboratory	Checked by
Calibration	21-Jan-2002	T	72.91	n.a	n.a	OVL	Ambient	IPN	Joly
Expedition	12-Mar-2003	T	71.399	0.1	0.1	OVL	293	CERN	Grivat
Reception	30Jul04	T W C	72,550				75°F	Fermi	Evans
		T W C							
		T W C							
		T W C							
		T W C							
		T W C							
		T W C							
		T W C							
		T W C							
		T W C							
		T W C							
		T W C							
		T W C							
		T W C							
		T W C							
		T W C							
		T W C							
		T W C							
		T W C							
		T W C							
		T W C							
		T W C							
		T W C							
		T W C							

CERN
CH-1211 Geneva 23
Switzerland

the **Large Hadron Collider** project

AT-MEL Document No.
LHC-MCBX-FR-0001 rev. **1.0**

EDMS Document No.

Certificate of Conformity

Part name:	MCBX Inner Triplet Dipole Corrector		
LHC Identification No.:	HCMCBX_001-SI000018	Serial No.:	HCMCBX_001-SI000018
Shipped To:	CERN	***Shipment No:***	***18***
		Shipment	***06/01/04***
Manufacturer:	SIGMAPHI	Contract No.:	F375/LHC/LHC
Related tech. Specification:	LHC-MCBX-CI-0001 and addenda		
Related drawings:	LHCMCBX_0012 (1525-CN-1001)		
Responsible person at CERN:	Mikko Karppinen	***Tel.***	+41 22 767 4305
		E-mail.	Mikko.Karppinen@cern.ch
Responsible person at SIGMAPHI:	Damien Neuvéglise	***Tel.***	+33 2 97 01 08 80
		E-mail.	dneuveglise@sigmaphi.fr
SIGMAPHI certifies that the delivered material conforms to the technical specification mentioned above:			
Date: 06/01/04	***Name: D.Neuvéglise***		***Signature: D.Neuvéglise***

Acceptance test results

		MCBXV (Inner)	***MCBXH (Outer)***	***Remarks:***
RT dc resistance (Ω):	***SIGMAPHI:***	***17.7***	***21.5***	
	CERN:	***17.570***	***21.514***	
	CMA[1]:			
Inductance @1 kHz/100 Hz (mH)	***SIGMAPHI:***	***66.17 / 113.28***	***68.25 / 161.4***	
	CERN	***34.734 / 72.262***	***45.566 / 88.259***	
	CMA:			
R.T. leakage current to ground @ 1.5 kV (μA):	***SIGMAPHI:***	***<10***	***<10***	
	CERN:	***7***	***15***	
	CMA:			

	Cold Mass Assembler
Visual inspection	
Name / Signature	
Date	

Accepted: ☒

Rejected: ☐

[1] Cold Mass Assembler

Comments (SigmaPhi):	***Rajout d'un clinquant de 0.05mm entre les tôles et l'outershell***

Comments (CERN):	***The magnetic axis of this assembly has not been measured at warm.***
	The scribe line is made using the dowel pin holes on the connection plate as the reference.
	During the combined powering field was rotated 0-360 deg at 95 % nominal current @ 1.9 K.

Comments (CMA):	

CERN
CH-1211 Geneva 23
Switzerland

the **Large Hadron Collider** project

AT MEL Document No.
LHC-MCSTX-FR-0001 rev. **1.0**

EDMS Document No.
———

Certificate of Conformity

Part name:	MCSTX Inner Triplet Sextupole Dodecapole Insert		
LHC Identification No.:	HCMCSTX001-CE000002	***Serial No.:***	HCMCSTX001-CE000002
Shipped To:	FNAL	***In MCBX assembly:***	HCMCBX_001-SI000018
		Shipment No:	***02***
Manufacturer:	CERN	***Shipment Date:***	***4/5/03***
Related tech. Specification:	LHC-MCSTX-CI-0001 (in preparation)		
Related drawings:	LHCMCSTX0001		
Responsible person at CERN:	Mikko Karppinen	***Tel.***	+41 22 767 4305
		E-mail.	Mikko.Karppinen@cern.ch
CERN certifies that the delivered material conforms to the technical specification mentioned above:			
Date: 22/10/03	***Name: M. Karppinen***		***Signature:*** *Mikko Karppinen*

Acceptance test results

		MCSX	***MCTX***	***Remarks:***
RT dc resistance (Ω):	***CERN:***	***27.84***	***98.69***	
	CMA[1]:			
Inductance @1 kHz/100 Hz (mH)	***CERN***	***2.25 / 4.77***	***24.25 / 31.37***	
	CMA:			
R.T. leakage current to ground @ 1.5 kV (μA):	***CERN:***	***0.0104***	***0.0104***	
	CMA:			

	Cold Mass Assembler
Visual inspection	
Name / Signature	
Date	

Accepted: ☒

Rejected: ☐

[1] Cold Mass Assembler

Comments (CERN):	***Magnetic axis have not been measured at warm.***

Comments (CMA):	