Document ID:

3505

LHC Q3 LMQXC Module Assembly Traveler

333729 / Rev. A

Job No: **248**

E + F Project/Task No.: **300/1.1.1.6.3**

M + S Project/Task No.: **300/1.1.1.6.2**

Place This Side Down For Scanning!!!

Magnet Travelers

LMQXC02-0

Document ID:

3505

Job No.:

248

Project/Task No.

300/1.1.1.6.3

Series:

LQXC

Serial No:

LMQXC02

Rework ID:

0

Specification No.:

333729

Revision:

A

LMQXC02-0

Fermi National Accelerator Laboratory
Batavia, IL 60510

LARGE HADRON COLLIDER
Q3 - LMQXC
COLD MASS MODULE ASSEMBLY TRAVELER

Reference Drawing(s):
Q3 Cold Mass Welded Assembly (ME-390529)
Q3 Module Assembly (ME-369900)

Project/Task Number: *300/1.1.1.6.2*

Released By: *John Szostak* **Magnet/Device Series:** *LQXC*

Date Issued: *12/22/2004 1:40:57 PM* **Scanned Pages:** 144

Prepared by: J. Szostak

Title	Signature	Date
TD / E&F Process Engineering	*Bob Jensen* Bob Jensen / Designee	*12/15/04*
TD / LHC Production Supervisor	*Jim Rife* Jim Rife / Designee	*12/15/04*
TD / LHC Production Engineer	*Rodger Bossert* Rodger Bossert / Designee	*12/15/04*
TD / LHC Project Engineer Cryostat	*Tom Nicol* Tom Nicol / Designee	*12/15/04*
TD / LHC Project Physicist	*Mike Lamm* Michael Lamm / Designee	*12/15/04*
TD / LHC Program Manager	*Jim Kerby* Jim Kerby / Designee	*12/15/04*

Revision Page

Revision	Step No.	Revision Description	TRR No.	Date
None	N/A	Initial Release	N/A	8/20/04
A	5.0	Modified Step. Modified to reflect production floor process.	1682	12/15/04
	9.2	Modified Step. Changed to Crew Chief signoff.		
	9.3	Modified Step. Changed to Weldor signoff.		
	12.3	Modified Step. Added "...and Figure 12.0."		
	15.2	Modified Step. Changed to "Using the Valhalla 4300B, connect 10mA applied voltage thru the corrector Power Leads. Measure Resistance and record in the table below." Modified Table. Added Picture of Corrector Bus Leads.		
	17.1	Modified Step. Changed (MC-369552) to (MC-369522).		
	17.4	Modified Step. Changed IP to Non-IP.		
	17.6	Modified Step. Changed IP to Non-IP.		
	17.7.2	Modified Step. Changed Non-IP to IP.		
	17.8	Modified Step. Changed Non-IP to IP.		
	17.10	Modified Step. Changed Non-IP to IP.		
	18.9	Added Step. "Tack weld the Extension Tube (MD-390667) to the Cold Mass per (ME-390529)."		
	18.11	Added Step. "Weld the Extension Tube (MD-390667) to the Cold Mass per (ME-390529)."		
	19.9	Modified Step. Changed to "Measure the distance between the Suspension Rings at the bottom of the Threaded Rods and record measurements below. Copy this page and place copy in designated book for later reference. (TR-333730, Q3 Cryostat Final Assembly, Step 5.1)."		
	19.17	Modified Step. Changed Non-IP to IP.		
	19.18	Modified Step. Removed Center – North and Center – South.		
	19.21	Removed Step. "Weld the Shielding Blocks (MB-390534) to the Cold Mass per Q3 Suspension System Installation (ME-390525)." No shielding Blocks		
	19.22	Modified Step. Added 112.5.		
	19.23	Modified Step. Added 337.5.		
	21.1	Modified Step. Modified Resistance Table.		
	21.2	Modified Step. Changed to "Using the Valhalla 4300B, connect 10mA applied voltage thru the corrector Power Leads. Measure Resistance and record in the table below." Modified Table. Added Picture of Corrector Bus Leads.		
	22.2	Added Step. Added "Assemble/Install Hypertronics Connectors, **without Cover** at **IP End** as per Q3 Module Assembly (ME-369900). Pin Numbers for connectors are shown in Table 22.2 below."		
	22.3	Added Step. "Inspect Hypertronics Connector. Ensure that it is free of flux and that Kapton has been installed properly."		
	22.4	Added Step. "After LHC Project Physicist / designee has signed the above step, complete the installation of the Hypertronics."		
	23.2	Modified Step. Changed to "Using the Valhalla 4300B, connect 10mA applied voltage thru the corrector Power Leads. Measure Resistance and record in the table below." Modified Table. Added Picture of Corrector Bus Leads.		
	23.4	Added Step. "Ensure electrical measurements are acceptable and confirm Hypertronics Connector has been installed properly."		

Ensure appropriate memos and specific instructions are placed with the traveler before issuing the sub traveler binder to production.

1.0 General Notes

1.1 All steps that require a sign-off shall include the Technician/Technician(s)s first initial and full last name.

1.2 No erasures or white out will be permitted to any documentation. All incorrectly entered data shall be corrected by placing a single line through the error, initial and date the error before adding the correct data.

1.3 All Discrepancy Reports issued shall be recorded in the left margin next to the applicable step.

1.4 Personnel shall perform all tasks in accordance with current applicable ES&H guidelines and those specified within the step.

1.5 Cover the product/assembly with Green Herculite (Fermi stock 1740-0100) when not being serviced or assembled.

2.0 Parts Kit List

2.1 Attach the completed Parts Kit for this production operation to this traveler. Ensure that the serial number on the Parts Kit matches the serial number of this traveler. Verify that the Parts Kit received is complete.

J. Grostoff
Process Engineering/Designee

1/3/05
Date

3.0 Q3 Module Alignment

XXX 3.1 Record the serial number for each Magnetic Component Assembly.

Q3 Serial Number: MQXA-12

MCBXA Corrector Coil Serial Number: HCMCBX-001-SI000020

MQSX Corrector Coil Serial Number: HCMQSX-001-AN000002

MCSOX Corrector Coil Serial Number: HCMCSOX-001 AN000002

Responsible Authority/Physicist — Date: 11/16/04

3.2 Attach the Certificate of Conformity, for vendor supplied components, and the Quality Record, for vendor supplied components, to this traveler.
Verify that the Certificate of Conformity and /or the Quality Record (as required) has been filled out and performed by Fermilab personnel.

Crew Chief — Date: 11-16-04

4.0 Q3 Magnet Placement (Module Assembly Tooling)

4.1 Configure tooling for Q3 Cold Mass Assembly (ME-390528) per Final Cold Mass Assembly Stat – Support and Clamping Fixture (ME-369768).

Technician(s) _____ Date 11-16-04

4.2 Configure tooling for Corrector Mounting per Cold Mass / Cryostat Station Corrector Support Fixture (ME-369780), 13.780 Diameter Corrector Magnet.

Technician(s) _____ Date 11-16-04

4.3 Configure tooling for End Dome Mounting per Cold Mass Cryostat Station Final Assembly (ME-369765, View E-E).

Technician(s) _____ Date 11-16-04

4.4 Move the Q3 Cold Mass to the Cold Mass Module Assembly Tooling, placing it nearest the West End of ICB, with the Lead End of the Magnet facing west as per Q3 Cold Mass Welded Assembly (ME-390529).

Technician(s) _____ Date 11-16-04

5.0 Bus Assembly Installation

5.1 Measure the length of the Cold Mass and record below.

Cold Mass Length: 23 feet

Technician(s) _____ Date 11/8/04

5.2 Add four feet (48 inches) to the Cold Mass Length and record below. This will be the top piece.

Cold Mass Length from step 5.1: 23 feet

Add: **+ 48 in.**

Length of top piece: 27 feet

Technician(s) _____ Date 11/8/04

Crew Chief _____ Date 11/8/04

5.3 Cut a piece of Nomex (MB-430064) equal to the total length recorded in step 5.2. This will be referred to as the top piece.

Technician(s) _____ Date 11/8/04

5.4 Record the total length of the top piece, recorded in step 5.2, below. Multiply the total by 2 and record the number below. This will be the length of the bottom piece.

Length of top piece: 27 feet

Multiply by 2: **x 2**

Length of bottom piece: 54 feet

Technician(s) _____ Date 11/8/04

Crew Chief _____ Date 11-8-04

5.5 Cut a piece of Nomex (MB-430064) equal to the total length recorded in step 5.4. This will be referred to as the bottom piece.

Technician(s) _____ Date 11/8/04

5.6 Pull the two pieces of Nomex (MB-430064) through the Bus Slot. Leave two feet of Nomex extending past the end of the Cold Mass at the Lead End and Non-Lead End. Fold top piece over top of Cold Mass and fold bottom piece under bottom of Cold Mass. (As shown n figure 5.6 below)

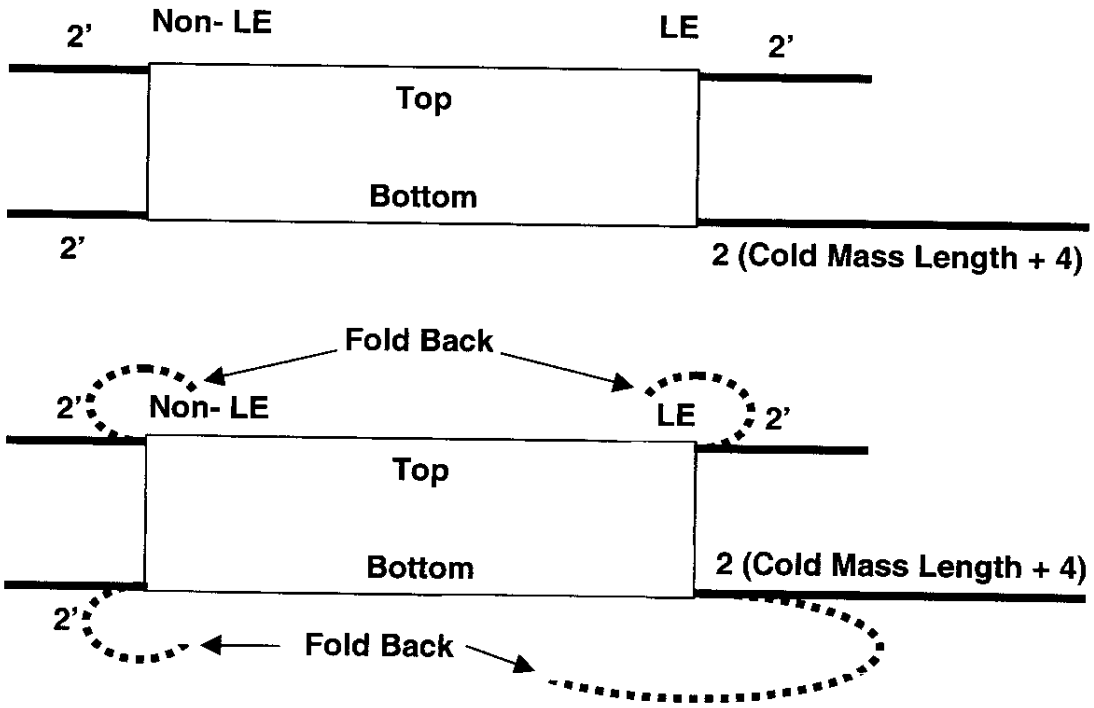

Figure 5.6

Technician(s) _____ Date 11/8/04

5.7 Starting at the Lead End, slide the Lead and Corrector Coil Bus Assembly (MB-430065) into Magnet Bus Slot between the two pieces of Nomex (MB-430064). The bottom piece of Nomex will move with the bus. Pull the bottom piece as it is being fed into the Cold Mass.

Technician(s) _____ Date 11/8/04

5.8 Cut Nomex (MB-430064) equal to the Length of the Cold Mass. (See Step 5.1 for reference)

Technician(s) _____ Date 11/8/04

6.0 Q3 Cold Mass Alignment

6.1 Rotate the Q3 Cold Mass, with the Power Leads facing up, into the proper orientation as shown in Figure 6.1-A.

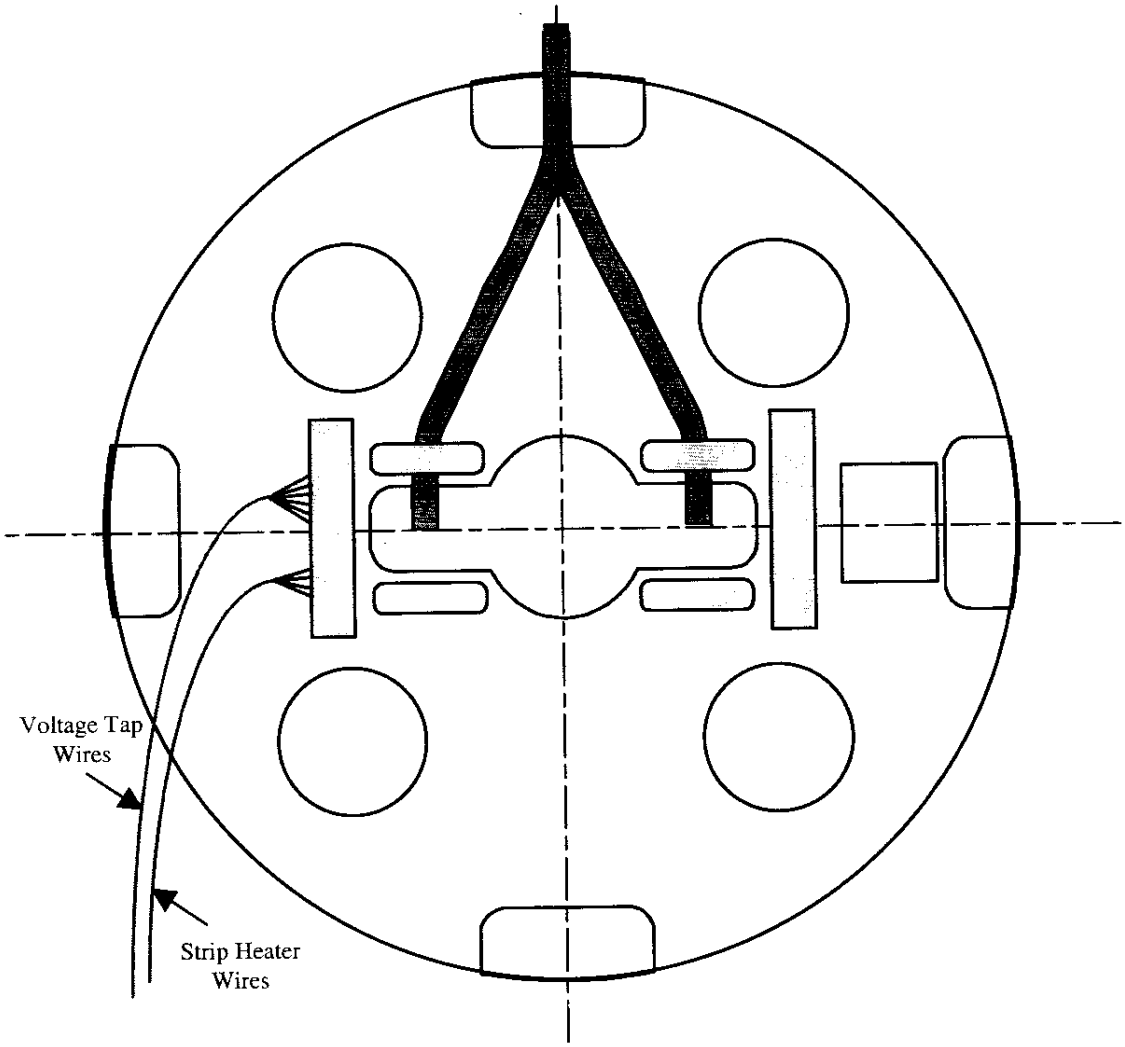

Looking at Lead End of Q3

Figure 6.1-A

Technician(s) _____ Date 11/8/04

XXX 6.2 Perform a stretched wire measurement of the system to align the Cold Mass within ± .2 mR.

Responsible Authority/Physicist _____ Date 11/9/04

7.0 Instrumentation Installation

7.1 Prepare Q3 Instrumentation Wire Feed thru (MB-430074). Build per Q3 Module Assembly Instrumentation Wire Feed thru (ME- 430074). Wire Labels and descriptions are shown in Figure 7.1 and per (MB-430074).

Note(s):

USE ONLY CERN LABELS ON WIRES.

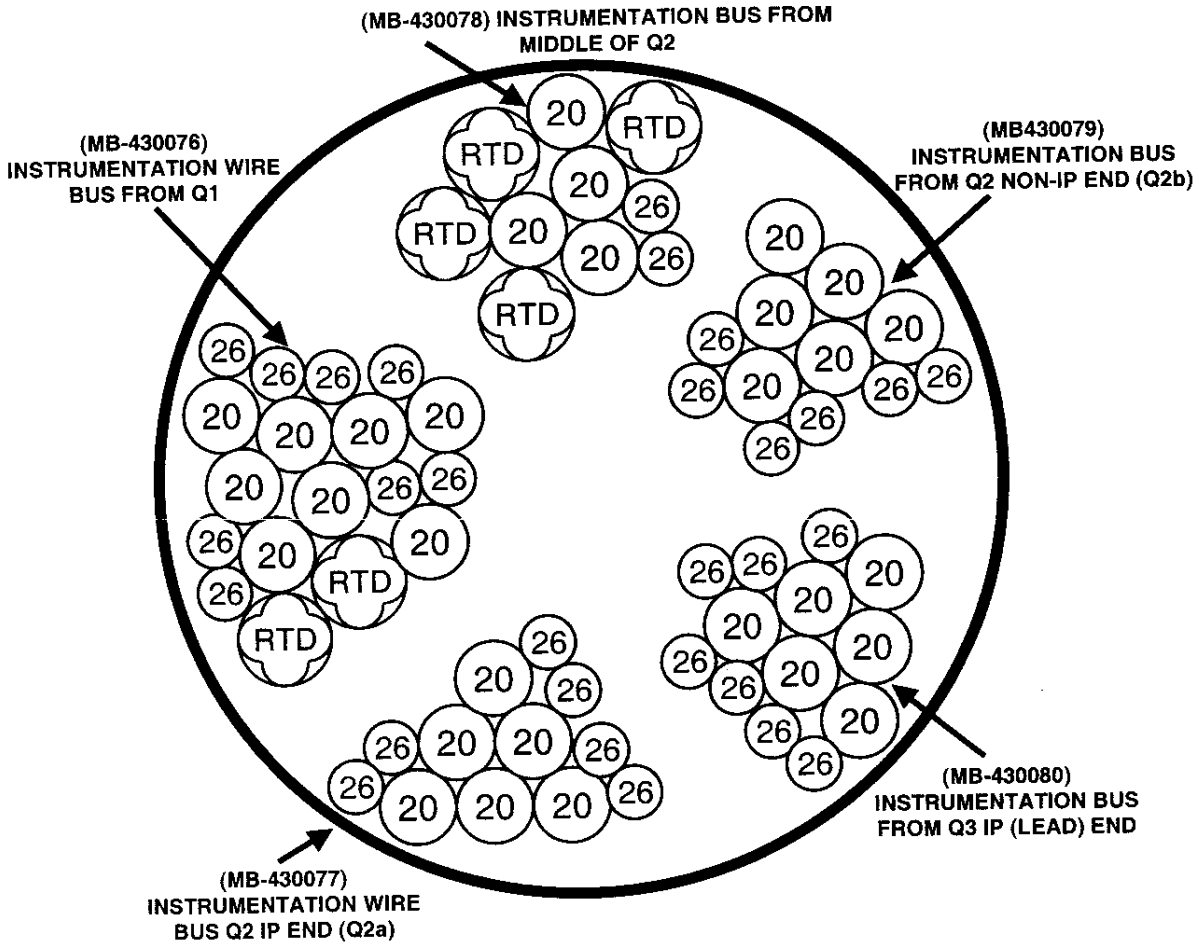

Figure 7.1
INSTRUMENTATION TUBE

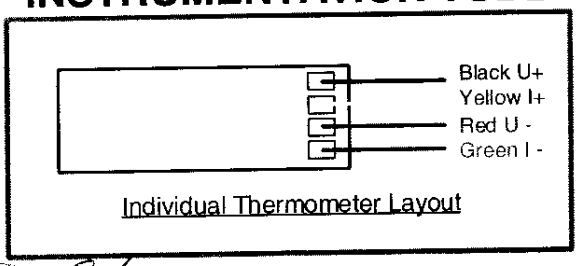

Technician(s) 11/8/04 Date

7.2 Slide Instrumentation Bus Assembly (MB-430074) into the proper Q3 Port as per Q3 Module Assembly (ME-369900). Verify that there is sufficient slack in cable to allow for two inches of differential thermal contraction.

Technician(s) _____ Date 11/8/04

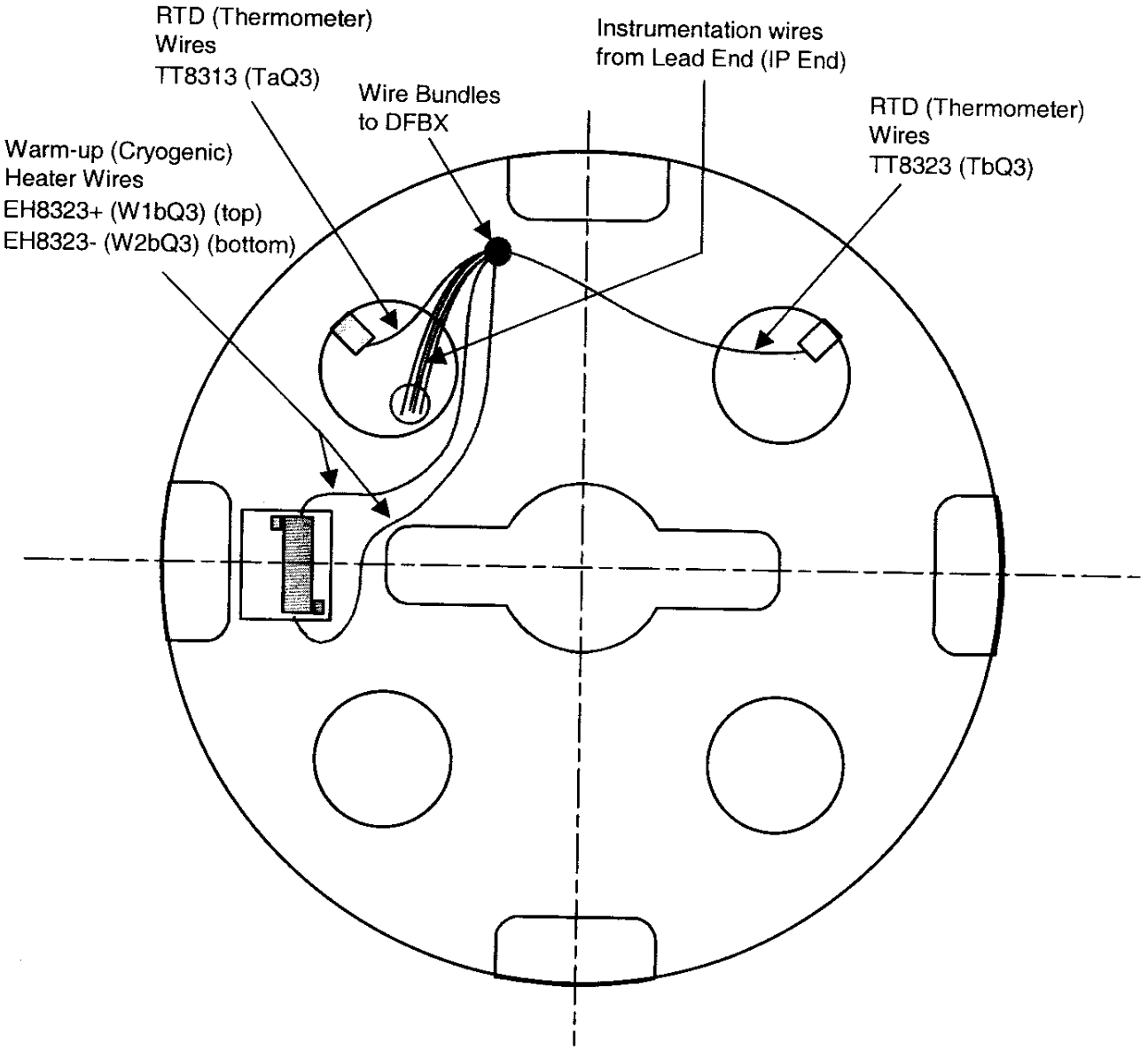

Looking at Non-Lead End (Non-IP End) of Q3

Figure 7.2-A

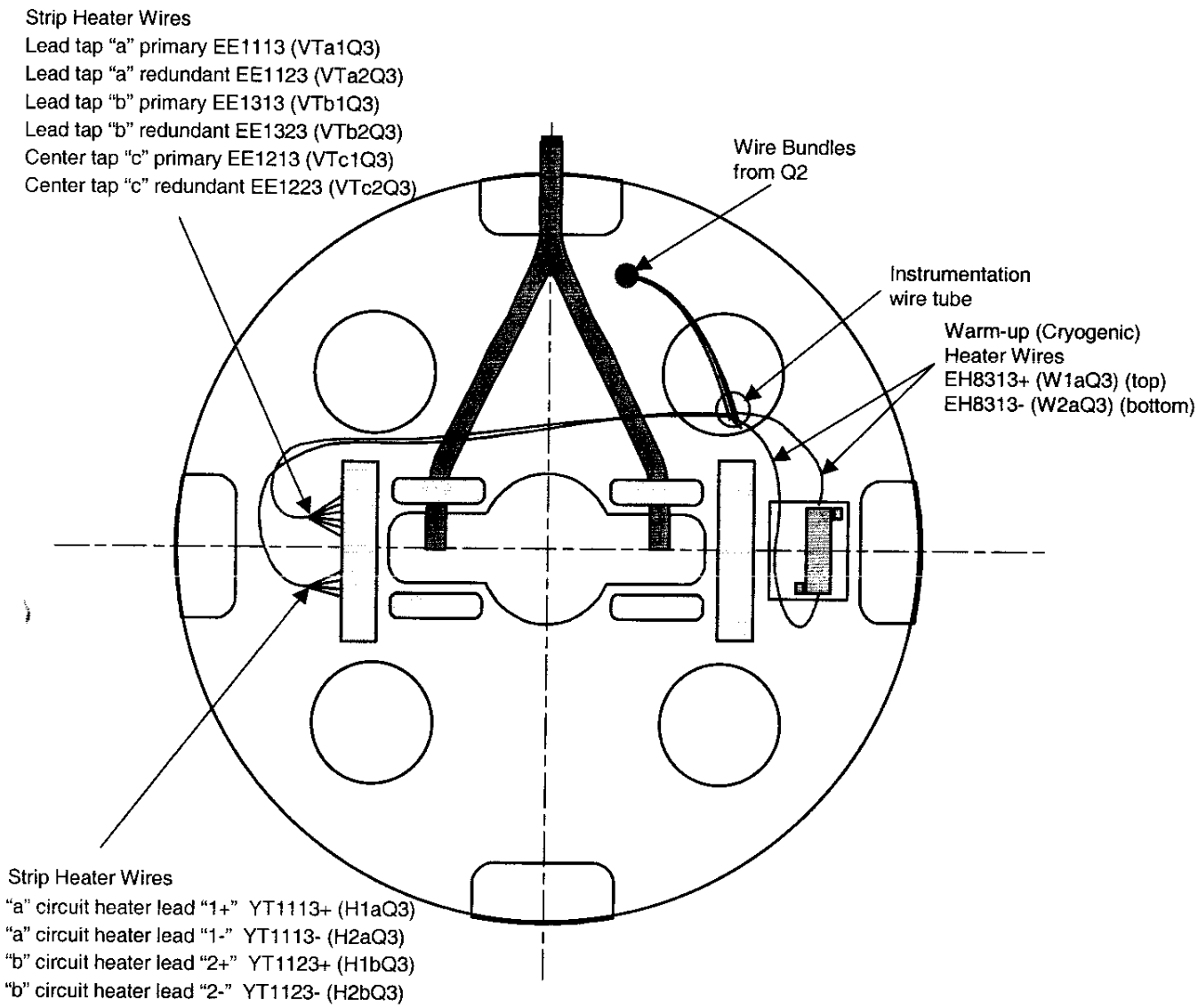

Looking at Lead End (IP end) of Q3

Figure 7.2-B

7.3 Weld Warm-up Heater Base Plates (MA-369997) and RTD Mount Blocks to End Plates as per Q3 Module Assembly (ME-369900).

Weldor(s) B.W. Date 11/5/04

7.4 Install Warm-up Heaters (ME-369834) to each end of Q3 as per Q3 Module Assembly (ME-369900).

7.4.1 Install Warm-up Heaters (MA-369834) onto the Warm-up Heater Base Plate (MA-369997).

7.4.2 Solder wires (MA-369832) to the Warm-up Heaters as per (ME-369900).

Technician(s) Date 11/8/04

7.5 Install RTD's as per Q3 Module Assembly (ME-369900). Record Serial Numbers of each RTD in the table below. Attach Data Sheet for each RTD to traveler.

7.5.1 Attach RTD's (MA-369835) (Qty. 4) to Mounting Blocks as per Q3 Module Assembly (ME-369900).

7.5.2 Solder wires (MA-369836) to RTD's as per Q3 Module Assembly (ME-369900). Individual RTD wiring is shown in Figure 7.5.2-A below.

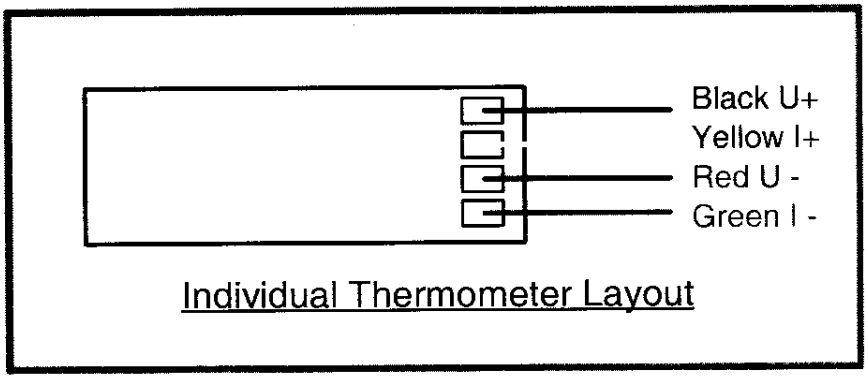

Figure 7.5.2-A

Technician(s) Date 11/8/04

7.6 Fill out the Cryogenic Thermometer Traveller that came with the RTD.
Fill out:

- Corrector Tag Name
- Date
- Resistance Measurement
- Temperature (i.e. 77° F)
- Firm/Laboratory (Fermi)
- Checked By (Print Last Name)

Once all information has been filled out, make a copy of the Cryogenic Thermometer Traveller and place copy in designated binder.

Technician(s) _____ Date 11/16/04

Crew Chief _____ Date 11-16-04

7.7 Perform a continuity check on all RTD's and Warm-Up Heaters. Record the Data below. (1mA). Record the resistance data from the Manufacturer's Traveler below. Compare RTD resistance test results to the resistance results from the Manufacturer's Traveler. Ensure RTD resistances are within **5Ω**. Attach the Manufacturer's RTD papers at the end of this traveler.

To measure the resistance of a Thermometer (RTD):

1. Use Hewlett Packard HP3457A digital multimeter.
2. Record temperature of building within +/- 5 degrees.
3. Press line button to turn line on.
4. Connect wires as shown in Figure below.
5. Push blue button (function key) once.
6. Push OHMF button.
7. Verify arrow in readout is above the 4WΩ (meaning a 4 wire resistance measurement).
8. Read resistance in ohms and record in traveler.

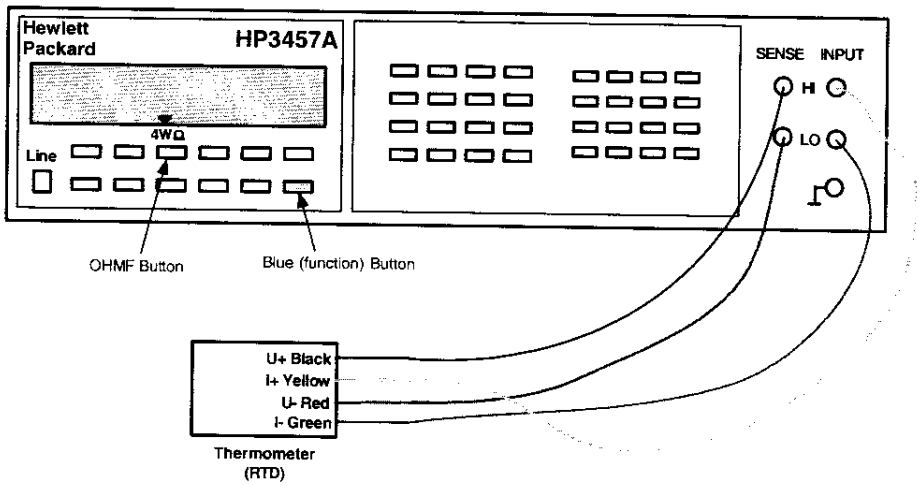

RTD'S			
Building Temperature: 72° F		**Time of Test:** 11:00	
Serial No.	**Location**	**Measured Ω**	**Mfr. Resistance (Expedition)**
TT8313	Q3 Inst. Bus Side	67.955 Ω	66.128 Ω
TT8323	Q3 Inst. Non-Bus Side	66.612 Ω	64.761 Ω

Cryogenic (Warm-up) Heaters		
Building Temperature: 72° F		**Time of Test:** 11:03
Location	**Wire No**	**Measured Ω**
Q3 Lead End (IP End)	**EH8313+**	16.560 Ω
	EH8313-	
Q3 Non-Lead End (Non-IP End)	**EH8323+**	16.339 Ω
	EH8323-	

Technician(s) _____ Date 11/16/04

7.8 Hipot RTD's to 100V. Use Droege Serial No. 910 (FNAL Part No. 51330) or equivalent. (Max. Leakage < 0.1 μA)

STOP

Have Crew Chief verify setup and sign below before continuing.

Crew Chief _____ Date 11/16/04

RTD'S		
Building Temperature: 72° F		**Time of Test:** 12:55
Serial No.	**Location**	**Hipot Leakage < 0.1 μA**
TT8313	Q3 Inst. Bus Side	< .1 μA
TT8323	Q3 Inst. Non-Bus Side	< .1 μA

Hipot Cryogenic (Warm-up) Heaters to 300V. Use Droege Serial No. 910 (FNAL Part No. 51330) or equivalent. (Max. Leakage < 0.1 μA)

STOP

Have Crew Chief verify setup and sign below before continuing.

Crew Chief _____ Date 11-16-04

Warm-up Heaters		
Building Temperature: 72° F		**Time of Test:** 12:50
Location	**Wire No**	**Hipot Leakage < 0.1 μA**
Q3 Lead End (IP End)	**EH8313+**	< .1 μA
	EH8313-	
Q3 Non-Lead End (Non-IP End)	**EH8323+**	< .1 μA
	EH8323-	

Technician(s) _____ Date 11/16/04

7.9 Mount the MCBXA Corrector Mounting Ring (ME-390037) to the MCBXA Corrector Magnet.

Technician(s) _____ Date 12/10/04

7.10 Position and align the MCBXA Corrector Magnet.

Technician(s) _____ Date 12/10/04

7.11 Tack weld the MCBXA Corrector Mounting Ring (ME-390037) to the Q3 Cold Mass Assembly (ME-390528) per Q3 Cold Mass Welded Assembly (ME-390529).

Weldor 803 _____ Date 12/10/04

7.12 Weld the MCBXA Corrector Mounting Ring (ME-390037) to the Q3 Cold Mass Assembly (ME-390108) Non-Lead End per Q3 Cold Mass Welded Assembly (ME-390529).

Weldor 803 _____ Date 12/10/04

7.13 Disassemble the MCBXA Corrector Magnet from the MCBXA Corrector Mounting Ring (ME-390037).

Technician(s) _____ Date 12/10/04

7.14 Mount the MQSX Corrector Mounting Ring (MD-390209) to the MQSX Corrector Magnet.

Technician(s) _____ Date 12/10/04

7.15 Position and align the MQSX Corrector Magnet per Q3 Cold Mass Welded Assembly (ME-390529).

Technician(s) _____ Date 12/10/04

7.16 Tack weld the MQSX Corrector Mounting Ring (MD-309209) to the Q3 Cold Mass Assembly (ME-390528) per Q3 Cold Mass Welded Assembly (ME-390529).

Weldor 803 _____ Date 12/10/04

7.17 Weld the MQSX Corrector Mounting Ring (MD-309209) to the Q3 Cold Mass Assembly (ME-390528) Lead End per Q3 Cold Mass Welded Assembly (ME-390529).

Weldor 803 _____ Date 12/10/04

7.18 Disassemble the MQSX Corrector Magnet from the MQSX Corrector Mounting Ring (MD-309209).

Technician(s) _____ Date 12/10/04

8.0 Splicing the Power Leads

8.1 Set up the Power Leads for splicing as shown in the Q3 Module Assembly Drawing (ME-369900).

Technician(s) _____ Date 1/3/05

8.2 Construct / Obtain Expansion Loop Tail per Q3 Module Assembly Insulated Expansion Loop Tail (MB-430145).

Technician(s) _____ Date 1/3/05

8.3 Solder the Upper Magnet Lead (Terminal "A", Quadrant 4) to the Lower 8kA Bus as per Q3 Module Assembly Drawing (ME-369900).

TRR# 1695

Technician(s) _____ Date 1/3/05

8.4 Solder the Lower Lead to the expansion Loop Tail from Step 8.2 as per Q3 Module Assembly Drawing (ME-369900).

Technician(s) _____ Date 1/3/05

8.5 Insulate each splice with 2/3 overlap, .002 x 3/8 wide Kapton, (MA-292722).

Technician(s) _____ Date 1/4/05

8.6 Insert a piece of .005 Kapton between splices.

Technician(s) _____ Date 1/4/05

8.7 Put splices together and insulate splice area with ¾ overlap, .002 x 3/8 wide Kapton (MA-292722).

Technician(s) _____ Date 1/4/05

8.8 Attach Q3 Bus Splice Clamp Assembly (MD-430031) to Q3 Lead as per Q3 Module Assembly (ME-369900).

Technician(s) _____ Date 1/4/05

Q3 Wiring System

R. Bossert 6-29-2004

Note: Corrector tap wires are not shown. They will be installed after correction coils are mounted. They are listed below:

MQSX Corrector, MQSX, A+ lead Q3A2 (skew quadrupole) voltage tap EE8223 (VTA2)
MCBXA Corrector, MCBXH, A+ lead Q3H3 (skew dipole) voltage tap EE8123 (VTH3)
MCBXA Corrector, MCBXV, A+ lead Q3V3 (normal dipole) voltage tap EE8113 (VTV3)
MCBXA Corrector, MCSX, A+ lead Q3B3 (normal sextupole) voltage tap EE8313 (VTB3)
MCBXA Corrector, MCTX, A+ lead Q3B6 (normal dodecapole) voltage tap EE8613 (VTB6)
MCSOX Corrector, MCSSX, A+ lead Q3A3 (skew sextupole) voltage tap EE8323 (VTA3)
MCSOX Corrector, MCOSX, A+ lead Q3A4 (skew octupole) voltage tap EE8423 (VTA4)
MCSOX Corrector, MCOX, A+ lead Q3B4 (normal octupole) voltage tap EE8413 (VTB4)

9.0 Installation of MQSX Corrector Coil

9.1 Move the MQSX Corrector Magnet up against the Mounting Ring on the Q3 Cold Mass and bolt the MQSX Corrector Magnet to the Q3 Cold Mass using the Silver Plated Mounting Screw and torque bolts to 500 in.-lbs. Shim between the corrector and flange as necessary.

Technician(s) _____ Date 12/20/04

9.2 Verify alignment of MQSX Corrector Magnet as per Q3 Module Assembly (ME-369900).

Crew Chief _____ Date 12-20-04

Responsible Authority/Physicist T. P. _____ Date 12/20/04

9.3 Tack weld bolts and washers for mounting MQSX Corrector Magnet into place per Q3 Cold Mass Welded Assembly (ME-390529).

Weldor(s) Bos _____ Date 12/20/04

9.4 Attach IP (Lead) End Buss Crossover Block Assembly (MD-430095) as per Q3 Module Assembly (ME-369900).

Technician(s) _____ Date 1-7-05

9.5 Attach Cable Clamp Assemblies as per Q3 Module Assembly (ME-369900).

Technician(s) _____ Date 1-7-05

9.6 Solder MQSX Corrector Wires.

Technician(s) _____ Date 1-07-05

9.7 Route Cable and Corrector Leads on IP (Lead) End as shown below and per Q3 Module Assembly (ME-369900).

Lead Bus Orientation through Q3

R. Bossert 3-29-04

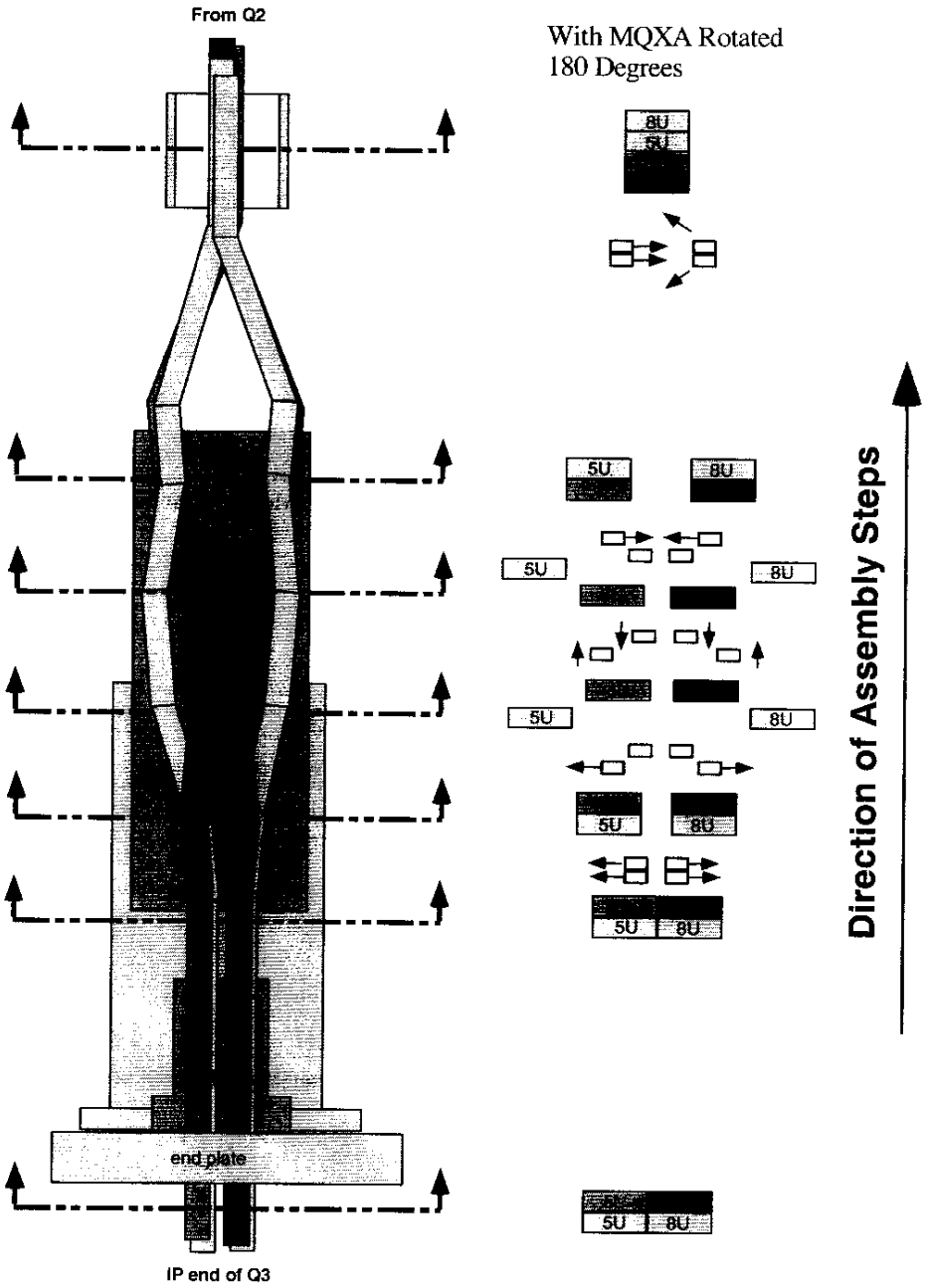

Figure 9.7-A

Technician(s) _____ Date _____

9.8 Attach Backing Splines as per Q3 Module Assembly (ME-369900).

Technician(s) _____ Date 1/14/05

9.9 Wrap the Springboard Assemblies in Kapton and then wrap with Kevlar String (MA-369912) every ½ - ¾" over Kapton as per Q3 Module Assembly (ME-369900).

Technician(s) _____ Date 1/14/05

10.0 Installation of MCBXA

10.1 Move the MCBXA Corrector Magnet up against the Mounting Ring on the Q3 Magnet, and bolt the MCBXA Corrector Magnet to the Q3 Cold Mass using the 3" Silver Plated Mounting Screw (MA-390247) and torque bolts to 500 in-lbs. per Note 4 of Q3 Cold Mass Welded Assembly (ME-390529). Shim between the Corrector and Flange as necessary.

Technician(s) — Date: 12/13/04

10.2 Verify Alignment of MCBXA Corrector Magnet as per Q3 Cold Mass Welded Assembly (ME-390529).

SJG — Technician(s) — Date: 12/13/04 ~~12-20-04~~

T. PAGE — T. Page — Responsible Authority/Physicist — Date: 12/3/04

10.3 Tack weld bolts and washers for mounting Corrector into place per Q3 Cold Mass Welded Assembly (ME-390529).

Weldor(s) 803 — Date: 12/13/04

10.4 Attach Non-IP End Bus Crossover Block Assembly (MD-430081) as per Q3 Module Assembly (ME-369900).

Technician(s) — Date: 1-5-05

10.5 Route MCBXA Corrector Coil Wires as shown in Figure 10.5 below and per Q3 Cold Mass Welded Assembly (ME-390529).

TRR# 1695 NEED TO INCLUDE V.T. WIRES HERE

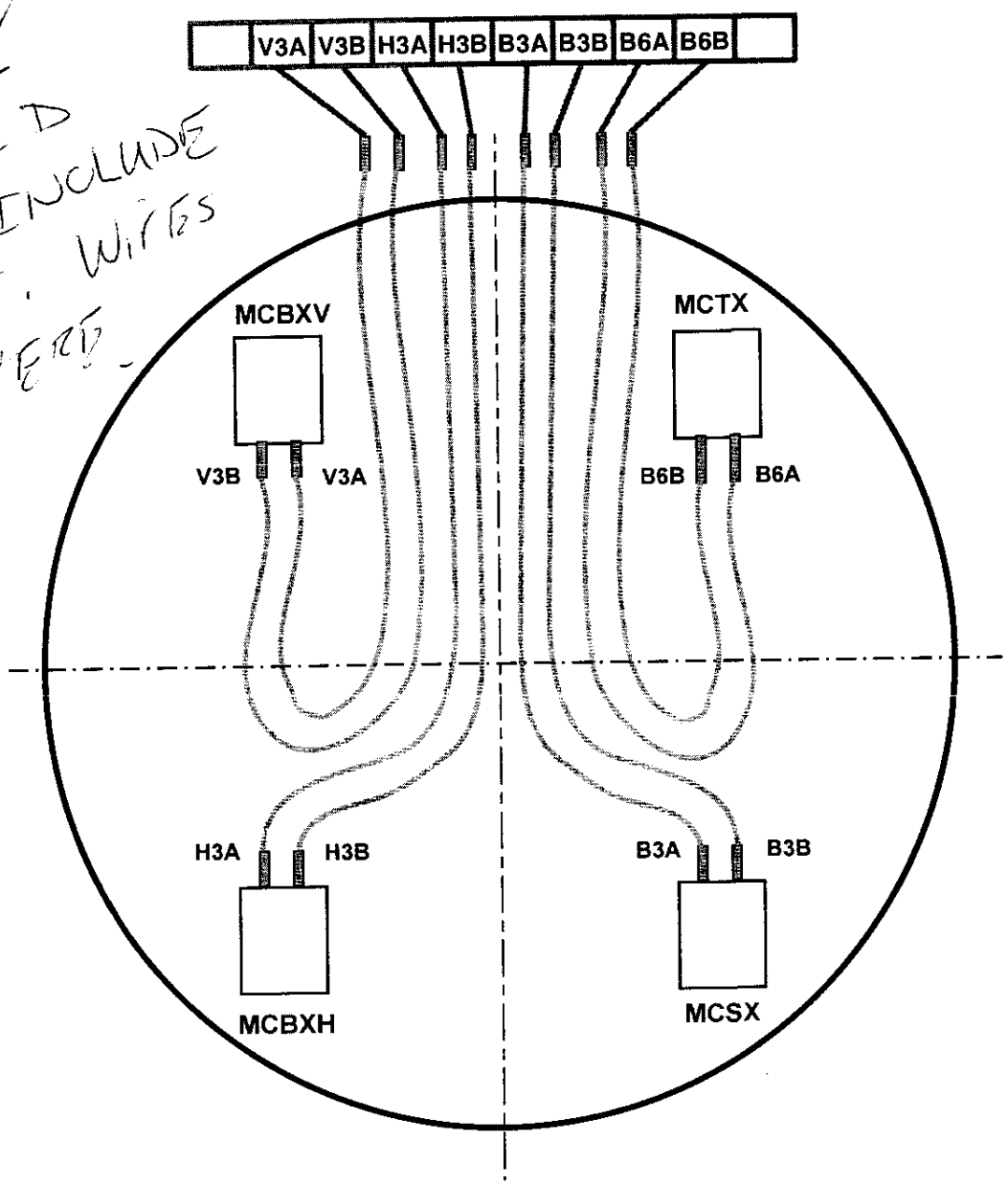

End View of MCBXA for Q3
(in "up" position)

Looking into end of correction coil from DFBX to Q3

Figure 10.5

Technician(s) _____ Date 12/18/07

11.0 Installation of MCSOX

11.1 Mount the MCSOX Corrector Magnet to the MCSOX Corrector Mounting Ring (ME-390664).

Technician(s) _____ Date 12/10/04

11.2 Slide the MCSOX Corrector Magnet & MCSOX Corrector Mounting Ring (ME-390664) up to the MCBXA Corrector Magnet.

Technician(s) _____ Date 12/10/04

11.3 Position the MCSOX Corrector Magnet radial (Scribe Line at 0°)

Technician(s) _____ Date 12/22/04

11.4 Position the MCSOX Corrector Magnet longitudinally. (The gap between the MCBXA Magnet and the Mounting Ring should be approximately 15mm.)

Technician(s) _____ Date 12/22/04

11.5 Tack weld MCSOX Corrector Mounting Ring (ME-390664) as per Q3 Cold Mass Welded Assembly (ME-390529).

Weldor(s) B013 _____ Date 12/10/04

11.6 Weld the MCSOX Corrector Mounting Ring (ME-390664) as per Q3 Cold Mass Welded Assembly (ME-390529).

Weldor(s) Bo13 — Date 12/10/04

11.7 Wire the MCSOX Corrector Magnet.

Technician(s) — Date 1-7-05

11.8 Verify alignment of the MCSOX Corrector Magnet.

Technician(s) — Date 12/22/04

Responsible Authority/Physicist T. P. — Date 12/22/04

11.9 Tack weld the MCSOX Corrector Magnet hardware as per Q3 Cold Mass Welded Assembly (ME-390529).

Weldor(s) Bo13 — Date 12/22/04

12.0 Configure MCSOX Corrector Coil Wires

Q3 Wiring System

R. Bossert 6-29-2004

Note: Corrector tap wires are not shown. They will be installed after correction coils are mounted. They are listed below:

MQSX Corrector, MQSX, A+ lead Q3A2 (skew quadrupole) voltage tap EE8223 (VTA2)
MCBXA Corrector, MCBXH, A+ lead Q3H3 (skew dipole) voltage tap EE8123 (VTH3)
MCBXA Corrector, MCBXV, A+ lead Q3V3 (normal dipole) voltage tap EE8113 (VTV3)
MCBXA Corrector, MCSX, A+ lead Q3B3 (normal sextupole) voltage tap EE8313 (VTB3)
MCBXA Corrector, MCTX, A+ lead Q3B6 (normal dodecapole) voltage tap EE8613 (VTB6)
MCSOX Corrector, MCSSX, A+ lead Q3A3 (skew sextupole) voltage tap EE8323 (VTA3)
MCSOX Corrector, MCOSX, A+ lead Q3A4 (skew octupole) voltage tap EE8423 (VTA4)
MCSOX Corrector, MCOX, A+ lead Q3B4 (normal octupole) voltage tap EE8413 (VTB4)

12.1 Attach the MCSOX Splice Plate Mounting Ring (ME-430129), the MCSOX Corrector Splice Face Plate (ME-430130), and the MCSOX Splice Plate Mounting Bars (ME-430128) as per Q3 Module Assembly (ME-369900).

Technician(s) _____ Date 1-7-05

12.2 Route wires as shown in figure below and per Q3 Module Assembly (ME-369900).

Technician(s) _____ Date 1-7-05

12.3 Solder Wires per Q3 Module Assembly (ME-369900) and Figure 12.0. (Next Page)

Technician(s) _____ Date 1-7-05

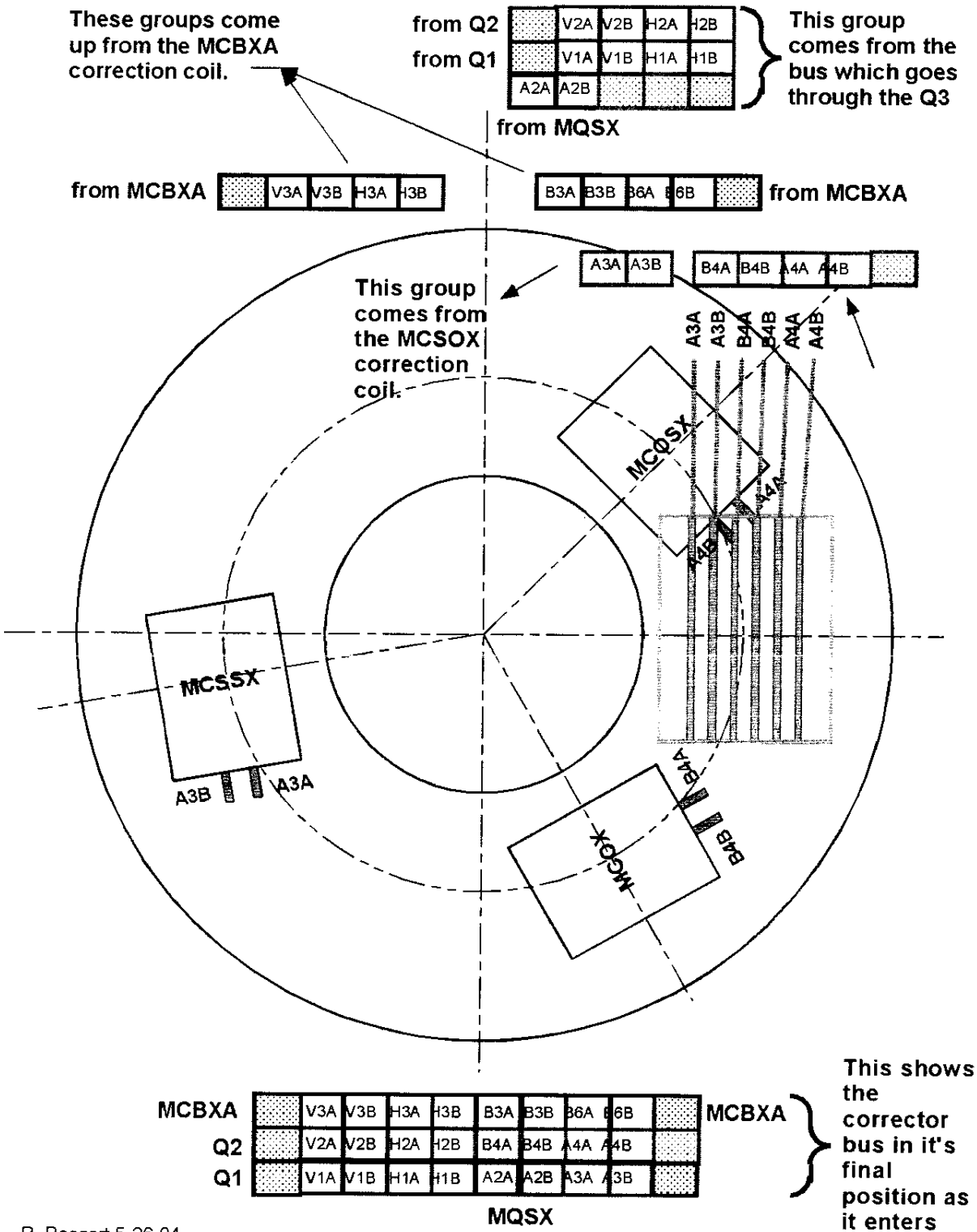

R. Bossert 5-26-04
Rev. A 7-29-04
Rev. B 9-30-04

Looking into non-IP end of Q3

Looking into end of correction coil from DFBX to Q3

Figure 12.0

13.0 Mount MCSOX Bus and Expansion Loop Hardware

13.1 Mount the Side Cable Clamp Assembly (ME-430103) as per Q3 Module Assembly (ME-369900).

Technician(s) _____ Date 1-7-05

13.2 Mount the Non-IP (Non-Lead End) Corrector Bus Bundle Bracket (ME-430134) as per Q3 Module Assembly (ME-369900).

Technician(s) _____ Date 1-7-05

14.0 Assemble Bus and Expansion Loop on Non-IP (Non-Lead) End

14.1 Route Non-IP End cables into crossover assembly on Non-IP End as shown in figure 16.1-A.

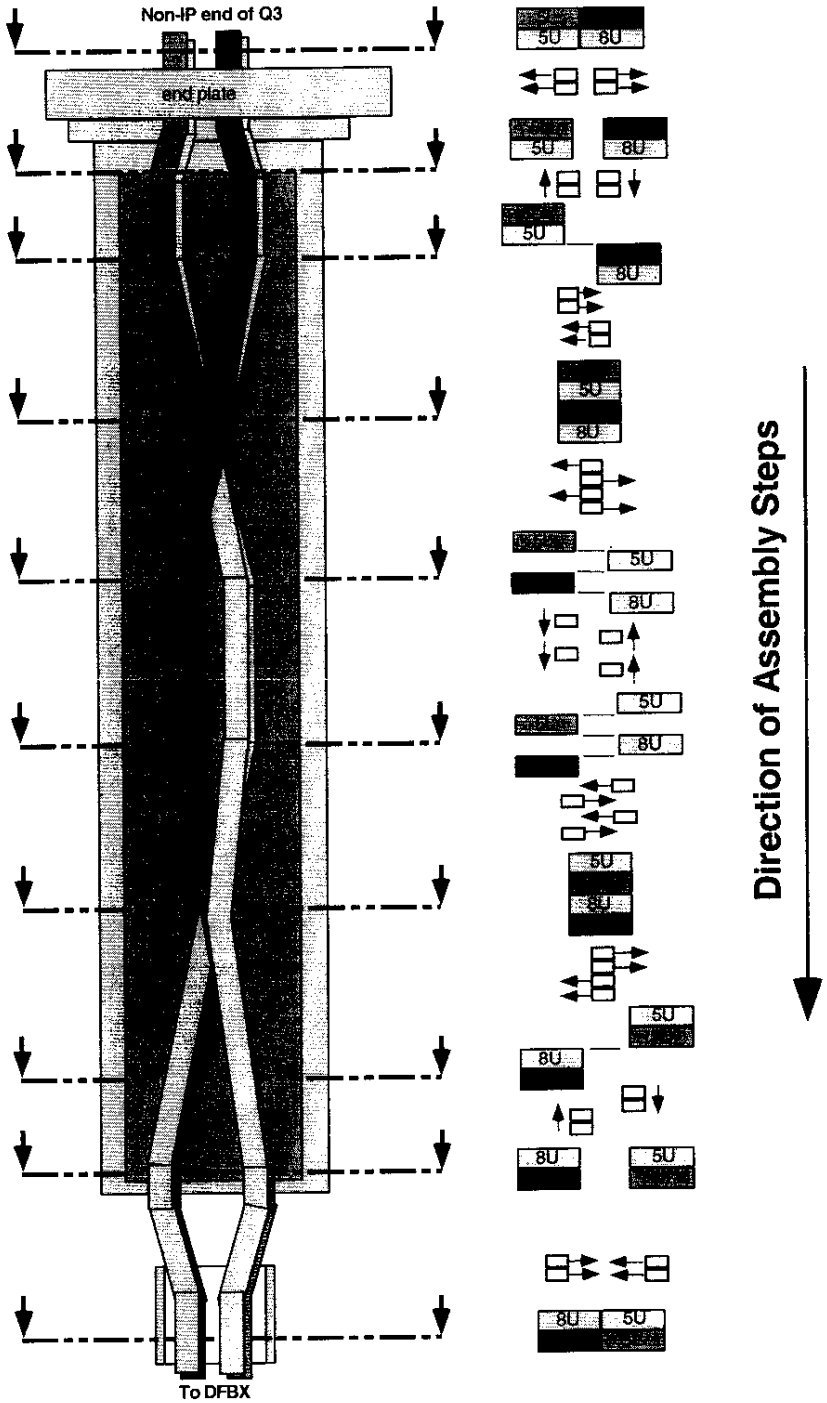

Figure 14.1-A

Technician(s)

1-7-05
Date

Q3 LMQXC Cold Mass Module Assembly

LHC Serial No.: LMQXC02-0
Notes:

14.2 Configure Bus Expansion Loop as per Q3 Module Assembly (ME-369900).

Technician(s) _____ Date 1.12.05

15.0 Electrical Inspection

15.1 Perform an electrical inspection on each of the Individual Quadrants and the Cold Mass. Refer to the Valhalla and Leader Free Standing Coil Measurement Procedure (ES-292306).

To measure the Resistance of a Q3 Cold Mass:

1. Use Valhalla Scientific 4300B digital micro-ohmmeter.
2. Set Test Current to 0.1 amp.
3. Set Scale to 2V full scale.
4. Turn temperature compensation on.
5. Turn test current off.
6. Connect I_{HI} to Q4 inner power lead as shown in figure.
7. Connect I_{LO} to Q3 inner power lead as shown in figure.
8. Turn test current on.
9. Connect V_{HI} and V_{LO} to voltage taps as shown in resistance table.
10. To measure Total with leads, connect V_{HI} to Q4 power lead and V_{LO} to Q3 power lead.
11. Read resistance and record in traveler.

(Q3) Resistance				Nominal 3.35 to 3.45 Ω
Voltage Tap Serial Numbers				Total Resistance
Connect	Fermi	CERN	KEK	
V_{HI}	VTa1Q3	EE1113	a1	3.404 Ω
V_{LO}	VTc1Q3	EE1213	c1	
V_{HI}	VTc1Q3	EE1213	c1	3.399 Ω
V_{LO}	VTb1Q3	EE1313	b1	
V_{HI}	VTa1Q3	EE1113	a1	6.801 Ω
V_{LO}	VTb1Q3	EE1313	b1	

		Total Resistance with Leads
		Nominal 6.75 to 6.85 Ω
V_{HI}	Q4 Power Lead	6.823 Ω
V_{LO}	Q3 Power Lead	

Technician(s)

1-12-05
Date

Check resistance of Redundant Voltage Taps.

Q3 Redundant Voltage Taps				Nominal 3.35 to 3.45 Ω
Connect	Fermi	CERN	KEK	Resistance
V_{HI}	VTa2Q3	EE1123	a2	3.403 Ω
V_{LO}	VTc2Q3	EE1223	c2	
V_{HI}	VTc2Q3	EE1223	c2	3.398 Ω
V_{LO}	VTb2Q3	EE1323	b2	

Technician(s)

1-12-05
Date

To measure Ls and Q of a Q3 Cold Mass:

1. Use Agilent 4263B LCR Meter.
2. Turn power on by pushing line button. Wait 30 seconds until display screen is lit.
3. Recall program #1. To do this, push recall (Rcl), then push #1, then push Enter.
4. Push Auto/Hold button to release hold.
5. Verify that the frequency displayed in the upper right corner of the display screen is 1000 Hz and the level recorded in the lower right corner of the display screen is 1V or 1000 mV.
6. Connect H_{cur} to Quadrant 4 power lead as shown in figure.
7. Connect L_{cur} to Quadrant 3 power lead as shown in figure.
8. Connect H_{pot} and L_{pot} buttons to voltage taps as shown below.

To measure Q3:

- To measure Quadrants 1&4, connect H_{pot} to VTa1 (EE1113 for Q3), and L_{pot} to VTc1 (EE1213 for Q3).
- To measure Quadrants 2&3, connect H_{pot} to VTc1 (EE1213 for Q3), and L_{pot} to VTb1 (EE1313 for Q3).
- To measure total, connect H_{pot} to VTa1 (EE1113 for Q3), and L_{pot} to VTb1 (EE1313 for Q3).

9. Read Ls and Q from display and record in traveler.

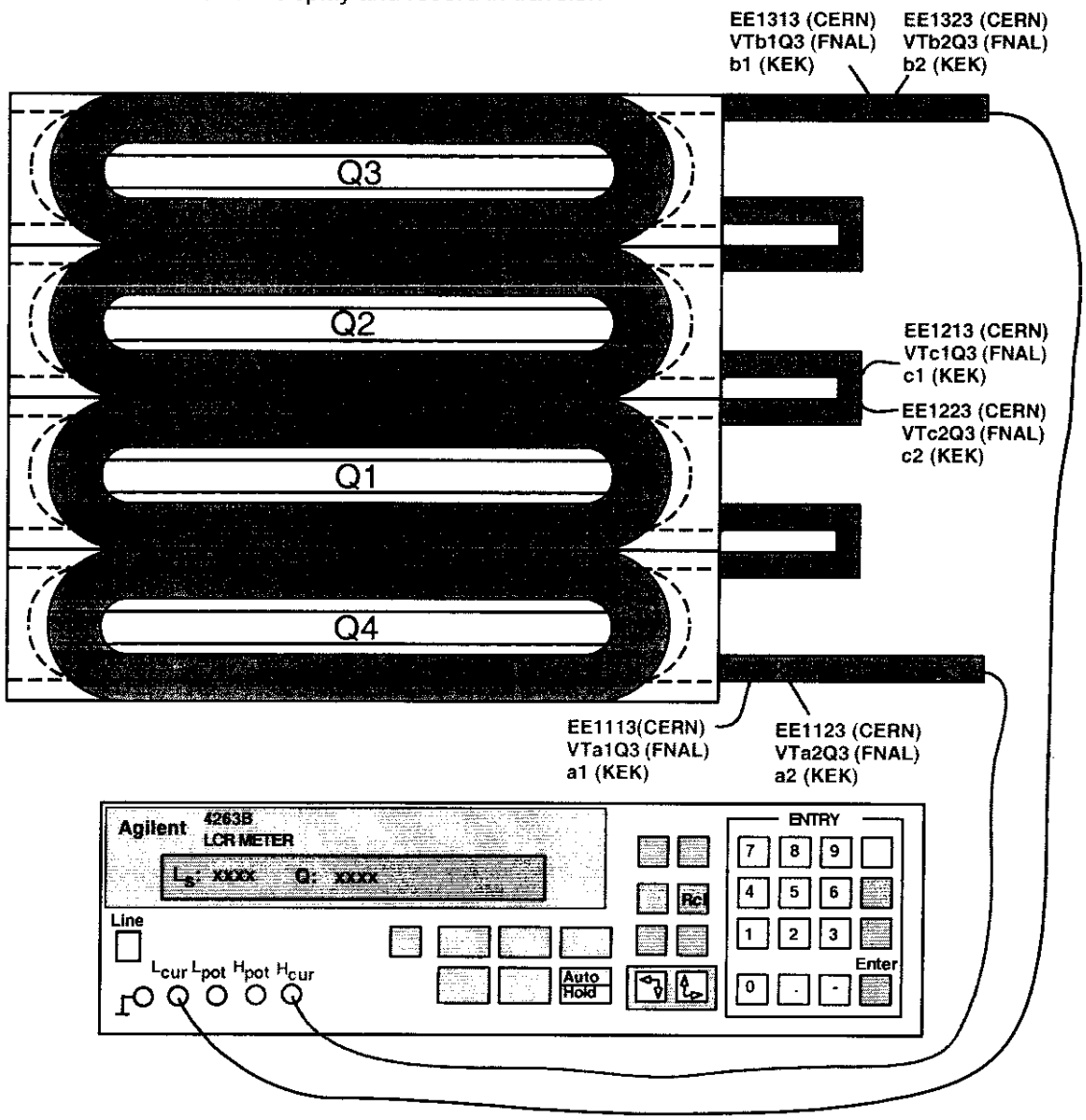

(Q3) Inductance				Nominal 15 to 16 mH
Voltage Tap Serial Numbers				Total Inductance
Connect	Fermi	CERN	KEK	
H_{POT}	VTa1Q3	EE1113	a1	15.662 mH
L_{POT}	VTc1Q3	EE1213	c1	
H_{POT}	VTc1Q3	EE1213	c1	15.677 mH
L_{POT}	VTb1Q3	EE1313	b1	

				Nominal 30 to 32 mH
				Total Inductance
H_{POT}	VTa1Q3	EE1113	a1	31.354 mH
L_{POT}	VTb1Q3	EE1313	b1	

(Q3) Q-Factor				Nominal 1.0 to 1.2
Voltage Tap Serial Numbers				Total Q
Connect	Fermi	CERN	KEK	
H_{POT}	VTa1Q3	EE1113	a1	1.1
L_{POT}	VTc1Q3	EE1213	c1	
H_{POT}	VTc1Q3	EE1213	c1	1.1
L_{POT}	VTb1Q3	EE1313	b1	

				Nominal 1.0 to 1.2
				Total Inductance
H_{POT}	VTa1Q3	EE1113	a1	1.2
L_{POT}	VTb1Q3	EE1313	b1	

Technician(s)

1-12-05
Date

To measure the resistance of a Thermometer (RTD):

1. Use Hewlett Packard HP3457A digital multimeter.
2. Record temperature of building within +/- 5 degrees.
3. Press line button to turn line on.
4. Connect wires as shown in Figure below.
   U+ (Black) to Sense HI
   I+ (Yellow) to Input HI
   U- (Red) to Sense LO
   I- (Green) to Input LO
5. Push blue button (function key) once.
6. Push OHMF button.
7. Verify arrow in readout is above the 4WΩ (meaning a 4 wire resistance measurement).
8. Read resistance in ohms and record in traveler.

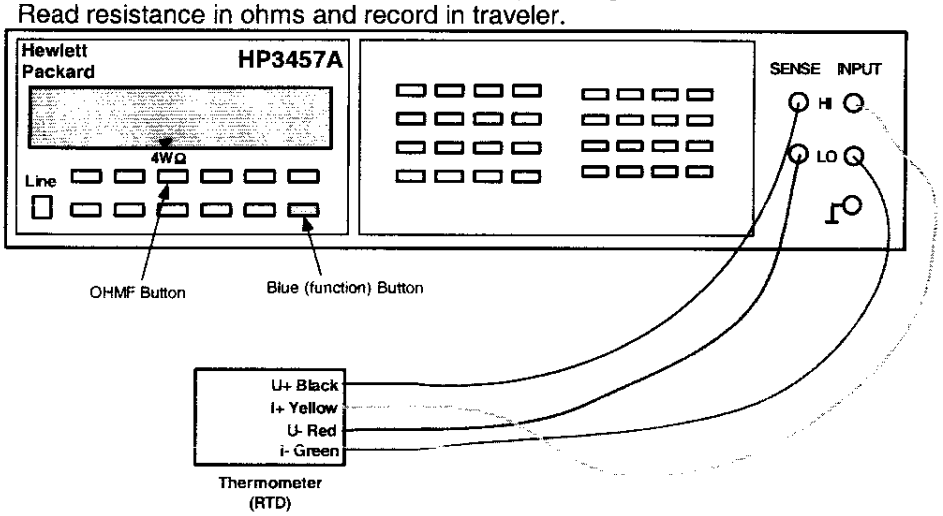

To measure the resistance of a Cryogenic (Warm-up) Heater

1. Use Hewlett Packard HP3457A digital multimeter.
2. Record temperature of building within +/- 5 degrees.
3. Press line button to turn line on.
4. Connect wires as shown in Figure below.
5. Push blue button (function key) once.
6. Push OHMF button.
7. Verify arrow in readout is above the 4WΩ (meaning a 4 wire resistance measurement).
   Note: Although this is technically a 4 wire measurement, it is effectively a 2 wire measurement, since there are only 2 wires connected to each heater.
8. Read resistance in ohms and record in traveler.

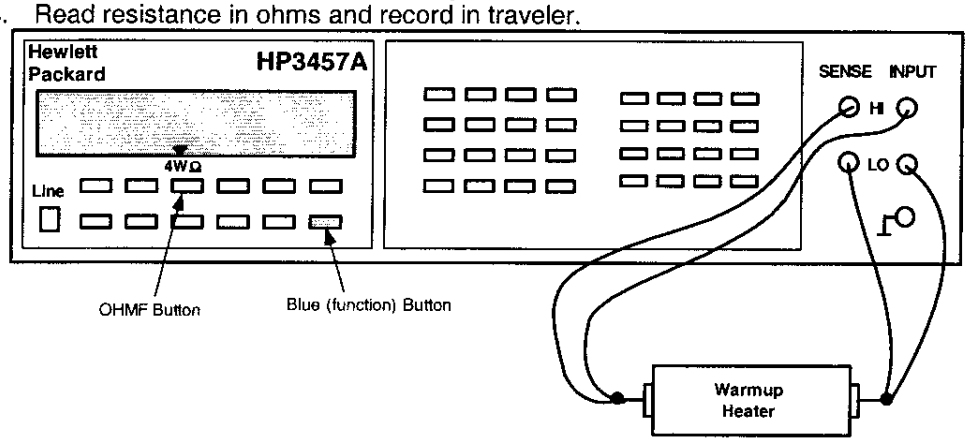

Q3 - RTD's and Cryogenic (warm-up) Heaters				
Temperature of Building (± 5°): 70				
Component	**Fermi**	**CERN**	**Range**	**Resistance**
Q3 RTD, primary	TaQ3	TT8313	**60 to 70 Ω**	67.985 Ω
Q3 RTD, redundant	TbQ3	TT8323	**60 to 70 Ω**	66.61 Ω
Q3 Cryogenic (warm-up) Heater (LE) - wire at top (CERN #1 I+)	W1aQ3	EH8313+	**16 to 18.5 Ω**	16.570 Ω
Q3 Cryogenic (warm-up) Heater (LE) - wire at bottom (CERN #1 I-)	W2aQ3	EH8313-		
Q3 Cryogenic (warm-up) Heater (Non-LE) - wire at top (CERN #2 I+)	W1bQ3	EH8323+	**16 to 18.5 Ω**	16.340 Ω
Q3 Cryogenic (warm-up) Heater (Non-LE) - wire at bottom (CERN #2 I-)	W2bQ3	EH8323-		

Technician(s) 1-12-05 Date

Using the Hewlett Packard HP3457A digital multimeter, measure the Protection (Strip) Heater Resistance for Q3.

Q3 Protection (Strip) Heater Resistance					
Fermi	**CERN**	**KEK**	**Description**	**Limit**	**Resistance**
H1aQ3	**YT1113+**	**HA1**	**Circuit A**	**28 to 32 Ω**	28.8 Ω
H2aQ3	**YT1113-**	**HA2**			
H1bQ3	**YT1123+**	**HB1**	**Circuit B**	**28 to 32 Ω**	28.8 Ω
H2bQ3	**YT1123-**	**HB2**			

Technician(s) 1-12-05 Date

15.2 Using the Valhalla 4300B, connect 10mA applied voltage thru the corrector Power Leads. Measure Resistance and record in the table below.

Corrector Bus Leads

	V3A	V3B	H3A	H3B	B3A	B3B	B6A	B6B	
	V2A	V2B	H2A	H2B	B4A	B4B	A4A	A4B	
	V1A	V1B	H1A	H1B	A2A	A2B	A3A	A3B	

(View Looking from DFBX into Q3)

Corrector Assembly	Corrector Element	Readout Labels		Power Labels	Resistance
MQSX	MQSX	A2A	EE8223	A2A, A2B	.06
		EE8223	A2B		7.63
		A2A	A2B		7.66
MCBXA	MCBXV	V3A	EE8113	V3A, V3B	.02
		EE8113	V3B		17.39
		V3A	V3B		17.41
	MCBXH	H3A	EE8123	H3A, H3B	.02
		EE8123	H3B		21.36
		H3A	H3B		21.38
	MCTX	B6A	EE8613	B6A, B6B	.02
		EE8613	B6B		98.28
		B6A	B6B		98.31
	MCSX	B3A	EE8313	B3A, B3B	.02
		EE8313	B3B		27.85
		B3A	B3B		27.86
MCSOX	MCOSX	A4A	EE8423	A4A, A4B	.01
		EE8423	A4B		11.88
		A4A	A4B		11.90
	MCOX	B4A	EE8413	B4A, B4B	0.03
		EE8413	B4B		12.90
		B4A	B4B		12.91
	MCSSX	A3A	EE8323	A3A, A3B	.01
		EE8323	A3B		13.45
		A3A	A3B		13.46

Technician(s) _____ Date 1/12/05

16.0 Dome Setup

16.1 Attach IP End Dome (MD-390221) (Q3) to the End Dome Positioning Fixture (MD-369776).

Technician(s) _____ Date 12-28-04

16.2 Align IP End Dome (MD-390221) as shown in Q3 Cold Mass Welded Assembly (ME-390529).

Technician(s) _____ Date 12/28/04

16.3 Level the IP End Dome (MD-390221) using the Ball Socket (MD-369777) and the Mini Level.

Technician(s) _____ Date 12-28-04

16.4 Mark the IP End Dome (MD-390221) and the End Plate with a Horizontal Witness Line. This Step will be used in Step 13.3 to reposition the Domes prior to Welding.

Technician(s) _____ Date 12/28/04

16.5 Remove the IP End Dome (MD-390221) from the Tooling.

Technician(s) _____ Date 12-28-04

16.6 Attach Non-IP End Dome (MD- 390668) (Q3) to the End Dome Positioning Fixture (MD-369776).

Technician(s) _____ Date 12-29-04

16.7 Align Non-IP End Dome (MD- 390668) as shown in Q3 Cold Mass Welded Assembly (ME-390529).

Technician(s) _____ Date 12-29-04

16.8 Level the Non-IP End Dome (MD- 390668) using the Ball Socket (MD-369777) and the Mini Level.

Technician(s) _____ Date 12-29-04

16.9 Feed the Electrical wires/bus through the proper ports as the Non-IP End Dome (MD- 390668) is brought into position against the End Plate.

Technician(s) _____ Date 12/29/04

16.10 Mark the Non-IP End Dome (MD- 390668) and the End Plate with a Horizontal Witness Line. This Step will be used in Step 13.6 to reposition the Domes prior to Welding.

Technician(s) _____ Date 12-29-04

16.11 Remove the Non-IP End Dome (MD- 390668) from the Tooling.

Technician(s) _____ Date 12-29-04

16.12 Perform preliminary reference measurements before moving the Cold mass to an Assembly Table.

T. Page
Responsible Authority/Physicist _____ Date 12/29/04

16.13 Move the Cold mass to an Assembly Table.

Technician(s) _____ Date 12/29/04

17.0 Beam Tube Insertion

17.1 Inspect the Beam Tube (MC-369522) for damage. Clean Beam Tube using lint free Heavy Duty Wipers (Fermi stock 1660-0150) and Isopropyl Alcohol (Fermi stock 1920-0300) as per Insulated Beam Tube Assembly for Q3 (MD-369838).

Technician(s) _____ Date 1-15-05

17.2 Using Insertion Tooling, insert the Beam Tube (MC-369522) into the Magnet Assembly as per Beam Tube Insertion Tooling (MD-369789).

Technician(s) _____ Date 1-15-05

17.3 Position the Beam Tube (MC-369522) longitudinally per Q3 Cold Mass Welded Assembly (ME-390529).

Technician(s) _____ Date 1-15-05

17.4 Place a mark 45mm from the Kapton insulation on Non-IP End of the Beam Tube.

Technician(s) _____ Date 1-15-05

17.5 Verify that the placement of the mark in Step 17.4 is correct.

Crew Chief _____ Date 1/15/05

17.6 Using the Wachs Cutter, cut the Non-IP End of the Beam Tube at the mark.

Technician(s) _____ Date 1-15-05

17.7 Measure the inside Beam Tube length and record this measurement below.

Step	Description	Measurement
17.7.1	**Beam Tube Length**	8890
	Subtract 8650mm (±2mm)	**- 8650mm**
17.7.2	**(Length to be cut from IP End)**	= 240 mm

Technician(s) _____ Date 1-15-05

17.8 Using the number recorded in Step 17.7.2, measure and place a mark at the IP End of the Beam Tube.

Technician(s) _____ Date 1-15-05

17.9 Verify that the placement of the mark in Step 17.8 is correct.

Crew Chief _____ Date 1/15/05

17.10 Using the Wachs Cutter, cut the IP End of the Beam Tube at the mark.

Technician(s) _____ Date 1-15-05

17.11 Measure and verify Beam Tube length is 8650 (±2mm). Record Actual Beam Tube Length below.

Actual Beam Tube Length	8649

Technician(s) _____ Date 1-15-05

Responsible Authority/Physicist _____ Date 1/15/05

XXX 17.12 Hipot the Beam Tube to coil, heaters and ground. (5kV) (Max. Leakage < 0.5μA)

STOP

Have Crew Chief verify setup and sign below before continuing.

Crew Chief _____ Date 1/15/05

Hipot	Leakage or Failure Voltage	Pass	Fail
Beam Tube to coil, heaters and ground	.017μA	✓	

Technician(s) _____ Date 1-15-05

Responsible Authority/Physicist _____ Date 1/15/05

18.0 Dome Installation

18.1 Tack weld the corrector mounting hardware in place as per Q3 Cold Mass Welded Assembly (ME-390529).

SKYCAST + PUTTY WERE USED HERE

~~Weldor(s)~~ TECH — Date: 1-20-05

18.2 Mount and adjust the Shipping restraint screws.

Note(s):
Weld to corrector if necessary.

Technician(s) — Date: 1-20-05

18.3 Reposition the IP End Dome as shown in Q3 Cold Mass Welded Assembly (ME-390529) using the Horizontal Witness Line from step 11.4.

Technician(s) — Date: 1-20-05

18.4 Tack weld the IP End Dome in place at approximately 6-8 places around the Dome per Q3 Cold Mass Welded Assembly (ME-390529).

Weldor(s) — Date: 1/21/05

18.5 Weld the IP End Dome, skip weld around to minimize distortion per Q3 Cold Mass Welded Assembly (ME-390529).

Weldor(s) — Date: 1/21/05

18.6 Reposition the Non-IP End Dome as shown in Q3 Cold Mass Welded Assembly (ME-390529) using the Horizontal Witness Line from step 11.10.

Technician(s) _____ Date 1-20-05

18.7 Feed the Electrical wires/Bus through the proper ports as the Non-IP End Dome is brought into position against the End Plate.

Technician(s) _____ Date 1-20-05

18.8 Ensure Spider Assembly (MB-430096) is installed properly as per Q3 Module Assembly (ME-369900).

Crew Chief _____ Date 1/20/05

DR HGQ 0520 (4130)

18.9 Tack weld the Extension Tube (MD-390667) to the Cold Mass per (ME-390529).

Weldor(s) _____ Date 1/21/05

18.10 Tack weld the Non-IP End Dome in place at approximately 6-8 places around the Dome as per Q3 Cold Mass Welded Assembly (ME-390529).

Weldor(s) _____ Date 1/21/05

DR HGQ 0521 (4131)

18.11 Weld the Extension Tube (MD-390667) to the Cold Mass per (ME-390529).

Weldor(s) _____ Date 1/22/05

18.12 Weld the Non-IP End Dome, skip weld around to minimize distortion as per Q3 Cold Mass Welded Assembly (ME-390529).

Weldor(s) _____ Date 1/22/05

19.0 Suspension System Assembly

19.1 Clean the Suspension System with Ethyl Alcohol (Fermi stock 1920-0550) and Kimwipes (Fermi stock 1660-2500) or equivalent.

Part Name	Part Number	Quantity	Completed
Fixed Support ~~Assembly~~	(ME-390~~041~~ 43)	1	
Sliding Support ~~Assembly~~	(ME-390~~042~~ 43)	1	
Tie Bar Assembly	(ME-390400)	2	
Tie Bar Shim, 6.4mm (.250")	(ME-390118)	4	4
Tie Bar Shim, 2.4mm (.093")	(ME-390119)	4	4
Tie Bar Shim, 0.8mm (.031")	(ME-390120)	4	4
Suspension System Adjusting Screw	(MB-390039)	8	8
M16 x 70mm SHCS	(MA-393021)	~~12~~ 8	
Washer (.656" ID x 1.38" OD x .13" THK STN STEEL)	(MA-390377)	~~12~~ 8	

TRR ~~WAS~~ ~~HERE~~ No TRR Needed QA CHECK TECH CHECK All Parts #'s

Label the IP End and the Non-IP End of the Vacuum Vessel with a temporary sticker or equivalent.

E. [illegible] 1-19-05
Technician(s) Date

TAR #1711

19.2 Insert the Fixed Support Assembly (ME-390041) into the Vacuum Vessel and position at the ~~Non-~~ DELETE IP End.

O. [illegible] 1-19-05
Technician(s) Date

TRR NEEDED 1721

19.3 Install the Suspension System Adjusting Screws (MB-390039) ~~and Washer (MA-390377)~~ & 390021 w/SLEEVES DELETE into the Vacuum Vessel to hold the Fixed Support Assembly in place. Coat all screw threads with Molybdenum Disulfide prior to installation.

[redacted]

Technician(s) _____ Date 1-19-05

19.4 Adjust the Vertical and rotational alignment of the Supports using the Suspension System Adjusting Screws (MB-390039). Ensure all four screws are in contact with the Support and that Diametrically Opposing Support Lugs are equidistant from the Vacuum Vessel Wall.

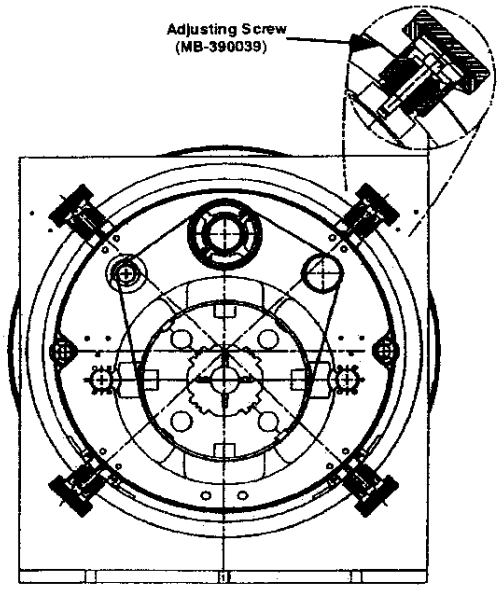

Technician(s) _____ Date 1-19-05

TRR# 1711

19.5 Insert the Sliding Support Assembly (ME-390042) in to the Vacuum Vessel and position at the ~~IP~~ Non End.

Technician(s) _____ Date 1-19-05

TRR NEEDED 1721

3-390021 w/ SLEEVES DELETE

19.6 Install the Suspension System Adjusting Screws (MB-390039) ~~and Washer (MA-390377)~~ into the Vacuum Vessel to hold the Fixed Support Assembly in place. Coat all screw threads with Molybdenum disulfide prior to installation.

[redacted]

C. Fries
Technician(s)

1-19-05
Date

19.7 Adjust the Vertical and rotational alignment of the Supports using the Suspension System Adjusting Screws (MB-390039). Ensure all four screws are in contact with the Support and that Diametrically Opposing Support Lugs are equidistant from the Vacuum Vessel Wall.

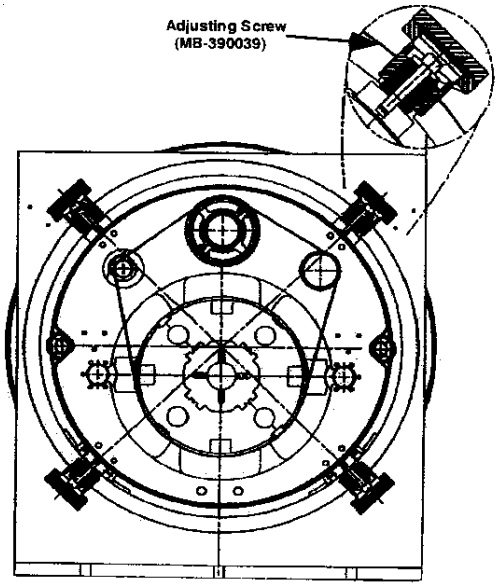

C. Fries
Technician(s)

1-19-05
Date

19.8 Assemble the Suspension System using the Fixed Support Assembly (ME-390041), the Sliding Support Assemblies (ME-390042) and the Tie Bar Assemblies (MC-390167). Insert Tie Bar Shims (MC-390118), (MB-390119) and (MB-390120) between the Sliding Support Assemblies (ME-390042) and the Tie Bar Assemblies (MC-390400) as required.
(Reference drawing: ME-390525).

O. Fiang — Technician(s) 1-19-05 — Date

19.9 Measure the distance between the Suspension Rings at the bottom of the Threaded Rods and record measurements below. Copy this page and place copy in designated book for later reference. (TR-333730, Q3 Cryostat Final Assembly, Step 5.1).

Non-IP North to IP North 164 7/8

Non-IP South to IP South 164 7/8

O. Fiang — Technician(s) 1-20-05 — Date

19.10 Measure from the face of the IP end vacuum vessel flange to the inside surface of the IP end suspension system.

Record measurement here: ~~78 5/8~~ 79 1/8" (2010 mm) IN MM

O. Fiang — Technician(s) 1-20-05 — Date

19.11 Measure from the face of the Non-IP end vacuum vessel flange to the inside surface of the Non-IP end suspension system.

Record measurement here: ~~78 9/16~~ 79 1/16 (2008 mm) IN MM

O. Fiang — Technician(s) 1-20-05 — Date

19.12 Label the IP End Support and the Non-IP End Support.
(Writing on the G-11 Support is acceptable).

O. Fiang — Technician(s) 1-20-05 — Date

19.13 Loosen each Suspension System Adjusting Screw (MB-390039) 1/2 turn and remove the Suspension System from the Vacuum Vessel.

Technician(s) — Date

19.14 Configure the Suspension Tooling for Q3 Assembly per Cryostat Layout Tooling & Assembly (ME-364604). Place Suspension Assembly on the tooling and make necessary adjustments to the tooling.

Technician(s) — Date 1-20-05

19.15 Assemble the Suspension Mounting Brackets (MD-390279) to the Support Assemblies.

Technician(s) _____ Date 1-25-05

19.16 Slide the Suspension System over the Cold Mass and place on tooling. The Suspension system may be disassembled during this step. Record shim sizes and locations prior to disassembly.

Note(s):

Ensure that the Suspension System is configured properly to the Cold Mass with respect to the IP and Non-IP Ends.

Technician(s) _____ Date 1-25-05

19.17 Verify locking collars exist only at IP End support.

Lead Person _____ Date 1-25-05

19.18 Establish alignment between the Cold Mass and the Support system. Install shims between the Brass Slide Bars and the Stainless Steel Blocks on each support as needed.

Record Shim size and location below.

East-North .040 **East South** .040

West-North .055 **West-South** .055

Technician(s) _____ Date 1-25-05

19.19 Verify the Alignment of the Cold Mass and the Support System.

Crew Chief _____ Date 1-25-05

19.20 Weld the Cold Mass to the Outboard Cold Mass Brackets (MB-430082) as per Q3 Module Assembly (ME-390900).

Weldor(s) _____ Date 1/26/05

19.22 Add 112.5mm to the number recorded in Step 19.10 and record below.

Recorded measurement from Step 19.10: 2010

Add: + **112.5 mm**

Record New Total: 2122.5

Technician(s) Date 1-27-05

19.23 Add 337.5mm to the number recorded in Step 19.11 and record below.

Recorded Measurement from Step 19.11: 2009

Add: + **337.5 mm**

Record New Total: 2345.5

Technician(s) Date 1-27-05

19.24 Position the IP End of the Beam Tube at the distance recorded in Step 19.22 from the inside surface of the IP G-10 support.

Technician(s) Date 1-27-05

19.25 Measure the Non-IP End of the Beam Tube from the inside surface of the Non-IP End support. Compare this number to the number recorded in Step 19.23.

Note(s):

These numbers should be the same to within 1 mm. If these numbers differ greater than 1 mm, contact Responsible Authority/Physicist.

Record measurement here: 2342

Recorded measurement from Step 19.23: 2345.5

Technician(s) Date 1-27-05

19.26 Measure from the IP End of the Beam Tube to the Spot Face on the IP End Dome. Record below.

Record measurement here: 19 mm

Technician(s) Date 1-27-05

19.27 Subtract 15mm from the number recorded in Step 19.26. This is the Spacer width for the IP End. Record below.

Recorded Measurement from Step 19.26: 19

Subtract: - 15mm

Spacer width for the IP End: 4 mm

Technician(s) Date 1-27-05

19.28 Measure from the Non-IP End of the Beam Tube to the Spot Face on the Non-IP End Dome. Record below.

Record measurement here: 20

Technician(s) Date 1-27-05

19.29 Subtract 15mm from the number recorded in Step 19.26. This is the Spacer width for the Non-IP End. Record below.

Recorded Measurement from Step 19.28: 20

Subtract: - 15mm

Spacer width for the Non-IP End: 5mm + 1mm (thatwere the FERMI SPACER

Technician(s) Date 1-27-05

PER T. PAGE, HAVE (2) 5mm SPACERS MADE INSTEAD OF (1) 4mm + (1) 6mm.

1/27/05

T. Page

20.0 Cold Bore

20.1 Flare both ends of the Beam Tube using Flaring Tool (MC-390416) per Q3 Cold Mass Welded Assembly (ME-390529).

Technician(s) _____ Date 1-27-05

20.2 Add Spacer between Beam Tube Flange and IP End Dome, if necessary.

Spacer Added? **Yes** ☒ **No** ☐

Technician(s) _____ Date 1-27-05

20.3 Position Beam Tube Flange (MC-390538) over the Beam Tube and onto IP End Dome per Q3 Cold Mass Welded Assembly (ME-390529).

Technician(s) _____ Date 1-28-05

20.4 Weld the Beam Tube to the Flange at IP End as per Q3 Cold Mass Welded Assembly (ME-390529).

Weldor(s) _____ Date 1/28/05

20.5 Position the Beam Tube Flange (MC-390538) over the Beam Tube and onto the Non-IP End Dome (Q3) per Q3 Cold Mass Welded Assembly (ME-390529).

Technician(s) _____ Date 1-28-05

20.6 Weld Beam Tube to Flange at Non-IP End as per Q3 Cold Mass Welded Assembly (ME-390529).

Weldor(s) _____ Date 1/28/05

20.7 Perform a stretched wire measurement of the system to align the Cold Mass within ± .2 mR.

Responsible Authority/Physicist _____ Date 2/1/05

20.8 Align Beam Tube and the Flange at IP End per Q3 Cold Mass Welded Assembly (ME-390529).

Technician(s) _____ Date 2/1/05

20.9 Weld the Flange to the IP End Dome as per Q3 Cold Mass Welded Assembly (ME-390529).

Weldor(s) _____ Date 2/1/05

20.10 Align Beam Tube and Flange at NON-IP End per Q3 Cold Mass Welded Assembly (ME-390529).

Technician(s) _____ Date 2/1/05

20.11 Weld the Flange to the Non-IP End Dome as per Q3 Cold Mass Welded Assembly (ME-390529).

Weldor(s) _____ Date 2/1/05

21.0 Electrical Inspection

21.1 Perform an electrical inspection on each of the Individual Quadrants and the Cold Mass. Refer to the Valhalla and Leader Free Standing Coil Measurement Procedure (ES-292306).

To measure the Resistance of a Q3 Cold Mass:

1. Use Valhalla Scientific 4300B digital micro-ohmmeter.
2. Set Test Current to 0.1 amp.
3. Set Scale to 2V full scale.
4. Turn temperature compensation on.
5. Turn test current off.
6. Connect I_{HI} to Q4 inner power lead as shown in figure.
7. Connect I_{LO} to Q3 inner power lead as shown in figure.
8. Turn test current on.
9. Connect V_{HI} and V_{LO} to voltage taps as shown in resistance table.
10. To measure Total with leads, connect V_{HI} to Q4 power lead and V_{LO} to Q3 power lead.
11. Read resistance and record in traveler.

(Q3) Resistance				Nominal 3.35 to 3.45 Ω
Voltage Tap Serial Numbers				Total Resistance
Connect	Fermi	CERN	KEK	
V_{HI}	VTa1Q3	EE1113	a1	3.393 Ω
V_{LO}	VTc1Q3	EE1213	c1	
V_{HI}	VTc1Q3	EE1213	c1	3.388 Ω
V_{LO}	VTb1Q3	EE1313	b1	

				Total Resistance with Leads
				Nominal 6.75 to 6.85
V_{HI}	VTa1Q3	EE1113	a1	6.781 Ω
V_{LO}	VTb1Q3	EE1313	b1	
V_{HI}	Q4 Power Lead			6.8 Ω
V_{LO}	Q3 Power Lead			

Technician(s) _____ Date 1/29/05

Check resistance of Redundant Voltage Taps.

Q3 Redundant Voltage Taps				Nominal 3.35 to 3.45 Ω
Connect	Fermi	CERN	KEK	Resistance
V_{HI}	VTa2Q3	EE1123	a2	3.396 Ω
V_{LO}	VTc2Q3	EE1223	c2	
V_{HI}	VTc2Q3	EE1223	c2	3.391 Ω
V_{LO}	VTb2Q3	EE1323	b2	

Technician(s) _____ Date 1/29/05

To measure Ls and Q of a Q3 Cold Mass:

1. Use Hewlett Packard HP4284A digital LCR meter.
2. Turn line switch to on. The words "Measurement Display" should now be highlighted in the upper left corner of the display screen.
3. Use cursor buttons (shown in figure with arrows) to toggle down until "function" is highlighted near the upper left corner of the display screen.
4. Push the lowest of the five buttons to the right of display 3 times. (This button is shaded gray in the figure) The line in the display screen next to the second button down should now read "Ls-Q" and "function" near the upper left corner of the display should have the option "Ls-Q" chosen.
5. Scroll to "integer" using the cursor buttons. "Integer" will have the option "medium" chosen.
6. Press the 3rd button of five. The word "medium" should change to "long".
7. Connect H_{cur} to Q4 power lead as shown in figure.
8. Connect L_{cur} to Q3 power lead as shown in figure.
9. Connect H_{pot} and L_{pot} to voltage taps as shown in table.
10. Read Ls and Q from display and record in traveler.

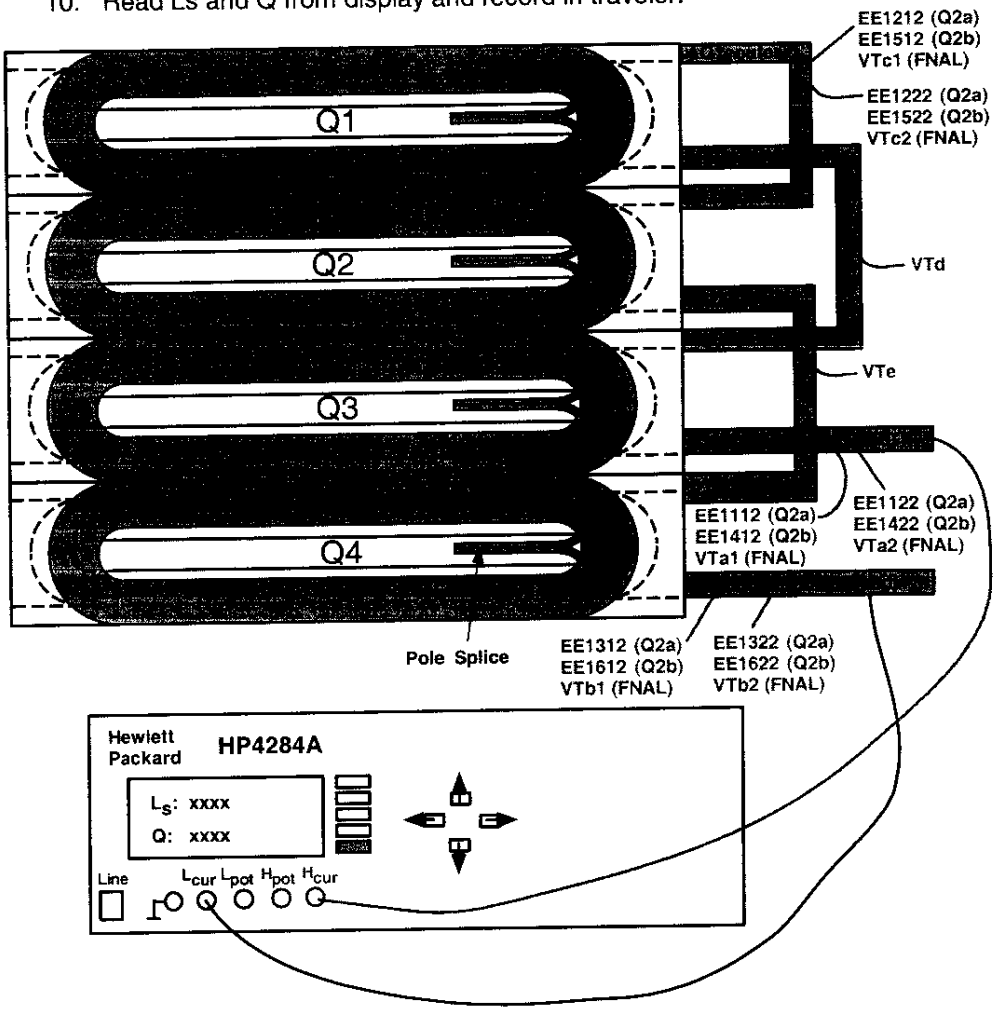

(Q3) Inductance				Nominal 15 to 16 mH
Voltage Tap Serial Numbers				Total Inductance
Connect	Fermi	CERN	KEK	
H_{POT}	VTa1Q3	EE1113	a1	15.041 mH
L_{POT}	VTc1Q3	EE1213	c1	
H_{POT}	VTc1Q3	EE1213	c1	15.155 mH
L_{POT}	VTb1Q3	EE1313	b1	

				Nominal 30 to 32 mH
				Total Inductance
H_{POT}	VTa1Q3	EE1113	a1	30.189 mH
L_{POT}	VTb1Q3	EE1313	b1	

(Q3) Q-Factor				Nominal 1.0 to 1.2
Voltage Tap Serial Numbers				Total Q
Connect	Fermi	CERN	KEK	
H_{POT}	VTa1Q3	EE1113	a1	1.2
L_{POT}	VTc1Q3	EE1213	c1	
H_{POT}	VTc1Q3	EE1213	c1	1.1
L_{POT}	VTb1Q3	EE1313	b1	

				Nominal 1.0 to 1.2
				Total Q
H_{POT}	VTa1Q3	EE1113	a1	1.2
L_{POT}	VTb1Q3	EE1313	b1	

Technician(s) [signature]

Date 1/29/05

To measure the resistance of a Thermometer (RTD):

1. Use Hewlett Packard HP3457A digital multimeter.
2. Record temperature of building within +/- 5 degrees.
3. Press line button to turn line on.
4. Connect wires as shown in Figure below.
   U+ (Black) to Sense HI
   I+ (Yellow) to Input HI
   U- (Red) to Sense LO
   I- (Green) to Input LO
5. Push blue button (function key) once.
6. Push OHMF button.
7. Verify arrow in readout is above the 4WΩ (meaning a 4 wire resistance measurement).
8. Read resistance in ohms and record in traveler.

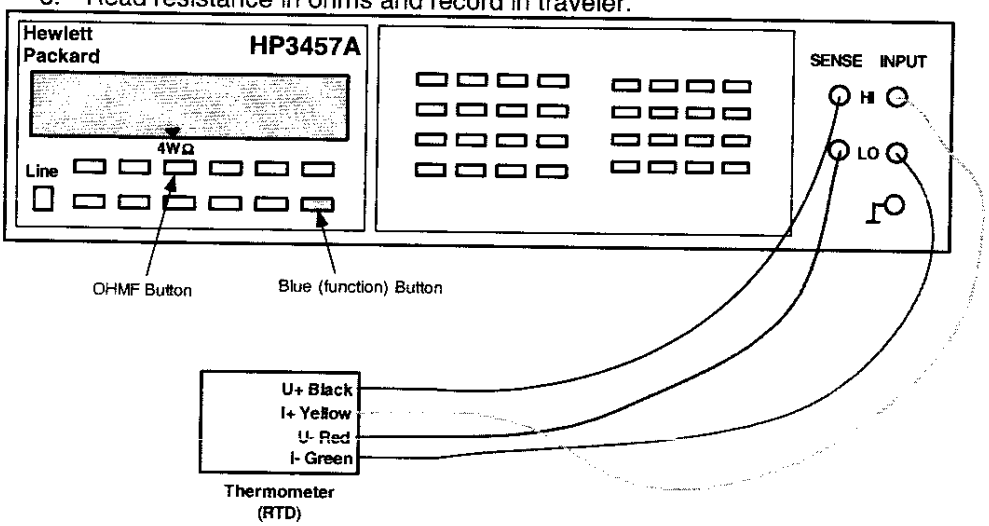

To measure the resistance of a Cryogenic (Warm-up) Heater

1. Use Hewlett Packard HP3457A digital multimeter.
2. Record temperature of building within +/- 5 degrees.
3. Press line button to turn line on.
4. Connect wires as shown in Figure below.
5. Push blue button (function key) once.
6. Push OHMF button.
7. Verify arrow in readout is above the 4WΩ (meaning a 4 wire resistance measurement).
   Note: Although this is technically a 4 wire measurement, it is effectively a 2 wire measurement, since there are only 2 wires connected to each heater.
8. Read resistance in ohms and record in traveler.

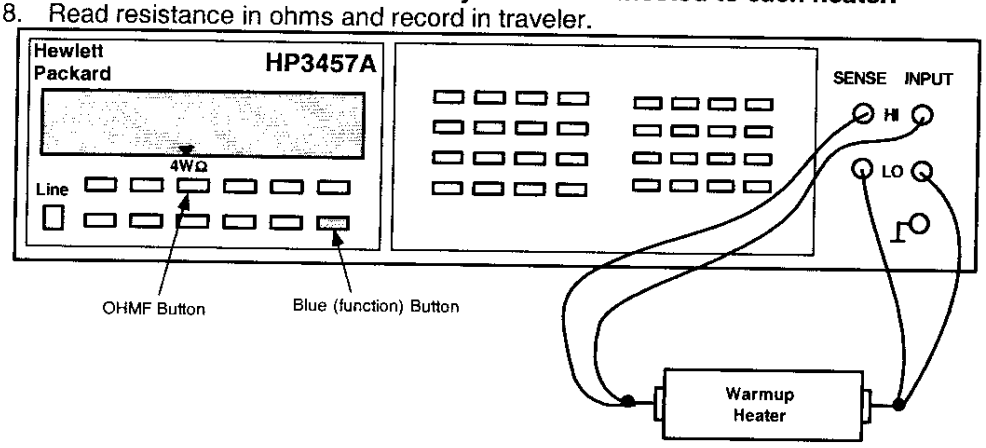

Q3 - RTD's and Cryogenic (warm-up) Heaters				
Temperature of Building (± 5°): 67°F				
Component	Fermi	CERN	Range	Resistance
Q3 RTD, primary	TaQ3	TT8313	60 to 70 Ω	68.41 Ω
Q3 RTD, redundant	TbQ3	TT8323	60 to 70 Ω	67.059 Ω
Q3 Cryogenic (warm-up) Heater (LE) - wire at top (CERN #1 I+)	W1aQ3	EH8313+	16 to 18.5 Ω	16.5202 Ω
Q3 Cryogenic (warm-up) Heater (LE) - wire at bottom (CERN #1 I-)	W2aQ3	EH8313-		
Q3 Cryogenic (warm-up) Heater (Non-LE) - wire at top (CERN #2 I+)	W1bQ3	EH8323+	16 to 18.5 Ω	16.706 Ω
Q3 Cryogenic (warm-up) Heater (Non-LE) - wire at bottom (CERN #2 I-)	W2bQ3	EH8323-		

Technician(s) Date 1/29/05

Using the Hewlett Packard HP3457A digital multimeter, measure the Protection (Strip) Heater Resistance for Q3.

Q3 Protection (Strip) Heater Resistance					
Fermi	CERN	KEK	Description	Limit	Resistance
H1aQ3	YT1113+	HA1	Circuit A	28 to 32 Ω	28.88 Ω
H2aQ3	YT1113-	HA2			
H1bQ3	YT1123+	HB1	Circuit B	28 to 32 Ω	28.962 Ω
H2bQ3	YT1123-	HB2			

Technician(s) Date 1/29/05

21.2 Using the Valhalla 4300B, connect 10mA applied voltage thru the corrector Power Leads. Measure Resistance and record in the table below.

Corrector Bus Leads

	V3A	V3B	H3A	H3B	B3A	B3B	B6A	B6B	
	V2A	V2B	H2A	H2B	B4A	B4B	A4A	A4B	
	V1A	V1B	H1A	H1B	A2A	A2B	A3A	A3B	

(View Looking from DFBX into Q3)

Corrector Assembly	Corrector Element	Readout Labels		Power Labels	Resistance
MQSX	MQSX	A2A	EE8223	A2A, A2B	SUC .067x2
		EE8223	A2B		7.57
		A2A	A2B		7.62
MCBXA	MCBXV	V3A	EE8113	V3A, V3B	SUC .017x3
		EE8113	V3B		17.37
		V3A	V3B		17.38
	MCBXH	H3A	EE8123	H3A, H3B	SUC .016x2
		EE8123	H3B		21.31
		H3A	H3B		21.33
	MCTX	B6A	EE8613	B6A, B6B	SUC .004x4
		EE8613	B6B		97.97
		B6A	B6B		97.99
	MCSX	B3A	EE8313	B3A, B3B	SUC .014x5
		EE8313	B3B		27.74
		B3A	B3B		27.76
MCSOX	MCOSX	A4A	EE8423	A4A, A4B	SUC .011x6
		EE8423	A4B		11.80
		A4A	A4B		11.82
	MCOX	B4A	EE8413	B4A, B4B	SUC .012x80
		EE8413	B4B		11.8
		B4A	B4B		12.82
	MCSSX	A3A	EE8323	A3A, A3B	SUC .013x35
		EE8323	A3B		9.9
		A3A	A3B		13.37

Technician(s) Date 11/29/05

Q3 LMQXC Cold Mass Module Assembly

LHC Serial No.: LMQXC02-0

Notes:

21.3 Hipot the Cable Busses according to tables below. Hipots are done @ 3kV. Hold for 30 seconds.

Ramp Rate	Hi Potential (3000 V)	Grounded	Leakage
10 V/sec	8L	Everything else	.283 μA
10 V/sec	5L	Everything else	.240 μA
10 V/sec	5U	Everything else	.242 μA
3 V/sec. Coil - Ground Coil - Strip Htrs	8U	Everything else	1.54 μA
3 V/sec. Strip Htrs - Ground Strip Htrs - Coil	Strip Heaters	Everything else	.260 μA

Technician(s)

1-29-05
Date

21.4 Hipot according to tables below.

Final Q3 Corrector and Bus Hipots

Looking into Non-IP End of Q3

Looking from DFBX to Q3

Gray – 500V | Others – 0V | ### Others – 0V

MCBXA		V3A	V3B	H3A	H3B	B3A	B3B	B6A	B6B	
Q2		V2A	V2B	H2A	H2B	B4A	B4B	A4A	A4B	
Q1		V1A	V1B	H1A	H1B	A2A	A2B	A3A	A3B	
						MQSX		MCSOX		

MCBXA
MCSOX

This shows the corrector bus in its final configuration as it enters the DFBX

Need to verify that there is no continuity between any of these paths

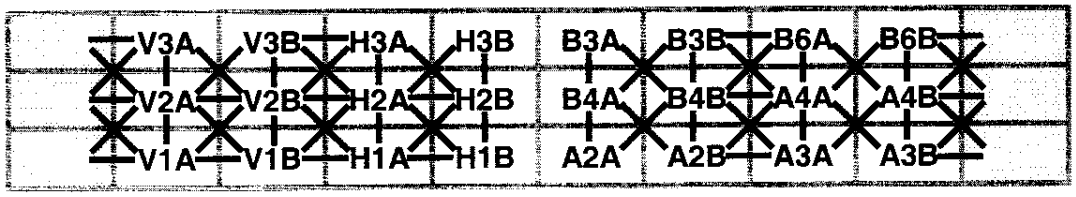

Measurement

Hipot #1
Gray – 500V
Others – 0V

V3A	V3B	H3A	H3B	B3A	B3B	B6A	B6B	
V2A	V2B	H2A	H2B	B4A	B4B	A4A	A4B	
V1A	V1B	H1A	H1B	A2A	A2B	A3A	A3B	

.030 µA

Hipot #2
Gray – 500V
Others – 0V

V3A	V3B	H3A	H3B	B3A	B3B	B6A	B6B	
V2A	V2B	H2A	H2B	B4A	B4B	A4A	A4B	
V1A	V1B	H1A	H1B	A2A	A2B	A3A	A3B	

.064 µA

Hipot #3
Gray – 500V
Others – 0V

V3A	V3B	H3A	H3B	B3A	B3B	B6A	B6B	
V2A	V2B	H2A	H2B	B4A	B4B	A4A	A4B	
V1A	V1B	H1A	H1B	A2A	A2B	A3A	A3B	

.055 µA

Hipot #4
Gray – 500V
Others – 0V

V3A	V3B	H3A	H3B	B3A	B3B	B6A	B6B	
V2A	V2B	H2A	H2B	B4A	B4B	A4A	A4B	
V1A	V1B	H1A	H1B	A2A	A2B	A3A	A3B	

.054 µA

Final Q3 Corrector and Bus Hipots

Looking into Non-IP End of Q3

Looking from DFBX to Q3

Measurement

Hipot #5
Gray – 500V
Others – 0V

V3A	V3B	H3A	H3B	B3A	B3B	B6A	B6B	
V2A	V2B	H2A	H2B	B4A	B4B	A4A	A4B	
V1A	V1B	H1A	H1B	A2A	A2B	A3A	A3B	

.050 µA

Hipot #6
Gray – 500V
Others – 0V

V3A	V3B	H3A	H3B	B3A	B3B	B6A	B6B	
V2A	V2B	H2A	H2B	B4A	B4B	A4A	A4B	
V1A	V1B	H1A	H1B	A2A	A2B	A3A	A3B	

.065 µA

Hipot #7
Gray – 500V
Others – 0V

V3A	V3B	H3A	H3B	B3A	B3B	B6A	B6B	
V2A	V2B	H2A	H2B	B4A	B4B	A4A	A4B	
V1A	V1B	H1A	H1B	A2A	A2B	A3A	A3B	

.159 µA

Technician(s)

1-29-05
Date

-R
71GQ 0527
(4143)

22.0 Installation of Hypertronics

22.1 Assemble/Install Hypertronics Connectors, **without Cover** at **Non-IP End** as per Q3 Module Assembly (ME-369900). Pin Numbers for connectors are shown in Table 22.1 below.

Module	Pin	Fermilab Label	CERN Label	KEK Label	Description
M1	1				Blank Module
M1	2				
M1	3				
M1	4				
M1	5				
M2	1	VTa1Q1	EE1111	a1	Q1 Lead Voltage Tap "a" , primary
M2	2	VTa2Q1	EE1121	a2	Q1 Lead Voltage Tap "a", redundant
M2	3	VTc1Q1	EE1211	c1	Q1 Center Voltage Tap "c", primary
M2	4	VTc2Q1	EE1221	c2	Q1 Center Voltage Tap "c", redundant
M2	5	VTb1Q1	EE1311	b1	Q1 Lead Voltage Tap "b", primary
M3	1	VTc1Q2a	EE1212		Q2a Center Voltage Tap "c", primary
M3	2	Empty	Empty		No connection
M3	3	VTa2Q2a	EE1122		Q2a lead Voltage Tap "a", redundant
M3	4	VTa1Q2a	EE1112		Q2a Lead Voltage Tap "a", primary
M3	5	VTb2Q1	EE1321	b2	Q1 Lead Voltage Tap "b", redundant
M4	1	VTc2Q2a	EE1222		Q2a Center Voltage Tap "c", redundant
M4	2	Empty	Empty		No connection
M4	3	VTb1Q2a	EE1312		Q2a Lead Voltage Tap "b", primary
M4	4	VTb2Q2a	EE1322		Q2a Lead Voltage Tap "b", redundant
M4	5	VTb1Q2b	EE1612		Q2b lead Voltage Tap "b", primary
M5	1	Empty	Empty		No connection
M5	2	VTc2Q2b	EE1522		Q2b Center Voltage Tap "c", redundant
M5	3	VTc1Q2b	EE1512		Q2b Center Voltage Tap "c", primary
M5	4	Empty	Empty		No connection
M5	5	VTb2Q2b	EE1622		Q2b Lead Voltage Tap "b" redundant
M6	1	VTa1Q2b	EE1412		Q2b Lead Voltage Tap "a", primary
M6	2	VTa2Q2b	EE1422		Q2b Lead Voltage Tap "a", redundant
M6	3	Empty	Empty		No connection
M6	4	Empty	Empty		No connection
M6	5	Empty	Empty		No connection
M7	1				Blank Module
M7	2				
M7	3				
M7	4				
M7	5				

Table 22.1

Table 22.1 (continued)

Module	Pin	Fermilab Label	CERN Label	KEK Label	Description
M8	1	VTH1	EE8121		Corrector voltage tap Q1-H1 (skew dipole) (on MCBX, MCBXH, A+ lead)
M8	2	VTV1	EE8111		Corrector voltage tap Q1-V1 (normal dipole) (on MCBX, MCBXV A+ lead)
M8	3	VTH2	EE8122		Corrector voltage tap Q2-H2 (skew dipole) (on MCBX, MCBXH, A+ lead)
M8	4	VTV2	EE8112		Corrector voltage tap Q2-V2 (normal dipole) (on MCBX, MCBXV, A+ lead)
M8	5	Empty	Empty		No connection
M9	1				Blank Module
M9	2				
M9	3				
M9	4				
M9	5				
M10	1	W1aQ1	EH8311+		Q1 Cryogenic Heater lead end - wire at top (CERN #1 I+)
M10	2	W2aQ1	EH8311-		Q1 Cryogenic Heater lead end - wire at bottom (CERN #1 I-)
M10	3	W1bQ1	EH8321+		Q1 Cryogenic Heater non-lead end - wire at top (CERN #2 I+)
M10	4	W2bQ1	EH8321-		Q1 Cryogenic Heater non-lead end - wire at bottom (CERN #2 I-)
M10	5	Empty	Empty		No connection
M11	1	W1aQ2A	EH8312+		Q2A Cryogenic Heater lead end - wire toward cold mass end plate (CERN #1 I+)
M11	2	W2aQ2A	EH8312-		Q2A Cryogenic Heater lead end - wire toward cold mass mag center (CERN #1 I-)
M11	3	W1bQ2A	EH8322+		Q2A Cryogenic Heater non-lead end- wire toward cold mass end plate (CERN #2 I+)
M11	4	W2bQ2A	EH8322-		Q2A Cryogenic Heater non-lead end- wire toward cold mass mag center (CERN #2 I-)
M11	5	Empty	Empty		No connection
M12	1	W1aQ2B	EH8332+		Q2B Cryogenic Heater lead end - wire toward cold mass end plate (CERN #1 I+)
M12	2	W2aQ2B	EH8332-		Q2B Cryogenic Heater lead end - wire toward cold mass mag center (CERN #1 I-)
M12	3	W1bQ2B	EH8342+		Q2B Cryogenic Heater non-lead end- wire toward cold mass end plate (CERN #2 I+)
M12	4	W2bQ2B	EH8342-		Q2B Cryogenic Heater non-lead end- wire toward cold mass mag center (CERN #2 I-)
M12	5	Empty	Empty		No connection

Table 22.1 (continued)

Module	Pin	Fermilab Label	CERN Label	KEK Label	Description
M13	1				Blank Module
M13	2				
M13	3				
M13	4				
M13	5				
M14	1	H1aQ1	YT1111+	HA1	Q1 Protection (Strip) Heater, ("a" circuit) (CERN lead #1+)
M14	2	Empty	Empty		No connection
M14	3	H2aQ1	YT1111-	HA2	Q1Protection (Strip) Heater, ("a" circuit) (CERN lead #1-)
M14	4	Empty	Empty		No connection
M14	5	H1bQ1	YT1121+	HB1	Q1 Protection (Strip) Heater, ("b" circuit) (CERN lead #2+)
M15	1	Empty	Empty		No connection
M15	2	H1aQ2a	YT1112+		Q2a Protection (Strip) Heater, 1-4 & 2-3 circuit (FNAL lead A+) (CERN lead #1+)
M15	3	Empty	Empty		No connection
M15	4	H2bQ1	YT1121-	HB2	Q1 Protection (Strip) Heater, ("b" circuit) (CERN lead #2-)
M15	5	Empty	Empty		No connection
M16	1	H2aQ2a	YT1112-		Q2a Protection (Strip) Heater, 1-4 & 2-3 circuit (FNAL lead A-) (CERN lead #1-)
M16	2	Empty	Empty		No connection
M16	3	H1bQ2a	YT1122+		Q2a Protection (Strip) Heater, 1-2 & 3-4 circuit (FNAL lead B+) (CERN lead#2+)
M16	4	Empty	Empty		No connection
M16	5	H2bQ2a	YT1122-		Q2a Protection (Strip) Heater, 1-2 & 3-4 circuit (FNAL lead B-) (CERN lead #2-)
M17	1	Empty	Empty		No connection
M17	2	H2aQ2b	YT1132-		Q2b Protection (Strip) Heater, 1-4 & 2-3 circuit (FNAL lead A-) (CERN lead #1-)
M17	3	Empty	Empty		No connection
M17	4	H1aQ2b	YT1132+		Q2b Protection (Strip) Heater, 1-4 & 2-3 circuit (FNAL lead A+) (CERN lead #1+)
M17	5	Empty	Empty		No connection
M18	1	H1bQ2b	YT1142+		Q2b Protection (Strip) Heater, 1-2 & 3-4 circuit (FNAL lead B+) (CERN lead#2+)
M18	2	Empty	Empty		No connection
M18	3	H2bQ2b	YT1142-		Q2b Protection (Strip) Heater, 1-2 & 3-4 circuit (FNAL lead B-) (CERN lead #2-)
M18	4	Empty	Empty		No connection
M18	5	Empty	Empty		No connection

Table 22.1 (continued)

Module	Pin	Fermilab Label	CERN Label	KEK Label	Description
M19	1				Blank Module
M19	2				
M19	3				
M19	4				
M19	5				
Note: Pin Numbers of Module M20 are not listed in numerical order.					
M20	1	TaQ1_I+	TT8311 I+		Q1 RTD, primary Wire color: Yellow
M20	2	TaQ1_I-	TT8311 I-		Q1 RTD, primary Wire color: Green
M20	3	TaQ1_V+	TT8311 U+		Q1 RTD, primary Wire color: Black
M20	4	TaQ1_V-	TT8311 U-		Q1 RTD, primary Wire color: Red
M20	5	TbQ1_I+	TT8321 I+		Q1 RTD, redundant: Wire color: Yellow
M20	6	TbQ1_I-	TT8321 I-		Q1 RTD, redundant: Wire color: Green
M20	11	TbQ1_V+	TT8321 U+		Q1 RTD, redundant: Wire color: Black
M20	10	TbQ1_V-	TT8321 U-		Q1 RTD, redundant: Wire color: Red
M20	9	TaQ2a_I+	TT8312 I+		Q2a RTD, primary Wire color: Yellow
M20	8	TaQ2a_I-	TT8312 I-		Q2a RTD, primary Wire color: Green
M20	7	TaQ2a_V+	TT8312 U+		Q2a RTD, primary Wire color: Black
M20	12	TaQ2a_V-	TT8312 U-		Q2a RTD, primary Wire color: Red
M20	13	TbQ2a_I+	TT8322 I+		Q2a RTD, redundant: Wire color: Yellow
M20	14	TbQ2a_I-	TT8322 I-		Q2a RTD, redundant: Wire color: Green
M20	15	TbQ2a_V+	TT8322 U+		Q2a RTD, redundant: Wire color: Black
M20	16	TbQ2a_V-	TT8322 U-		Q2a RTD, redundant: Wire color: Red
M20	17	Empty	Empty		No connection
Note: Pin Numbers of Module M21 are not listed in numerical order.					
M21	1	TaQ2b_I+	TT8332 I+		Q2b RTD, primary Wire color: Yellow
M21	2	TaQ2b_I-	TT8332 I-		Q2b RTD, primary Wire color: Green
M21	3	TaQ2b_V+	TT8332 U+		Q2b RTD, primary Wire color: Black
M21	4	TaQ2b_V-	TT8332 U-		Q2b RTD, primary Wire color: Red
M21	5	TbQ2b_I+	TT8342 I+		Q2b RTD, redundant: Wire color: Yellow
M21	6	TbQ2b_I-	TT8342 I-		Q2b RTD, redundant: Wire color: Green
M21	11	TbQ2b_V+	TT8342 U+		Q2b RTD, redundant: Wire color: Black
M21	10	TbQ2b_V-	TT8342 U-		Q2b RTD, redundant: Wire color: Red
M21	9	Empty	Empty		No connection
M21	8	Empty	Empty		No connection
M21	7	Empty	Empty		No connection
M21	12	Empty	Empty		No connection
M21	13	Empty	Empty		No connection
M21	14	Empty	Empty		No connection
M21	15	Empty	Empty		No connection
M21	16	Empty	Empty		No connection
M21	17	Empty	Empty		No connection

Hypertronics Connector Pin Locations (Q3 non-IP end)

VIEW: Male (pin) solder cup side

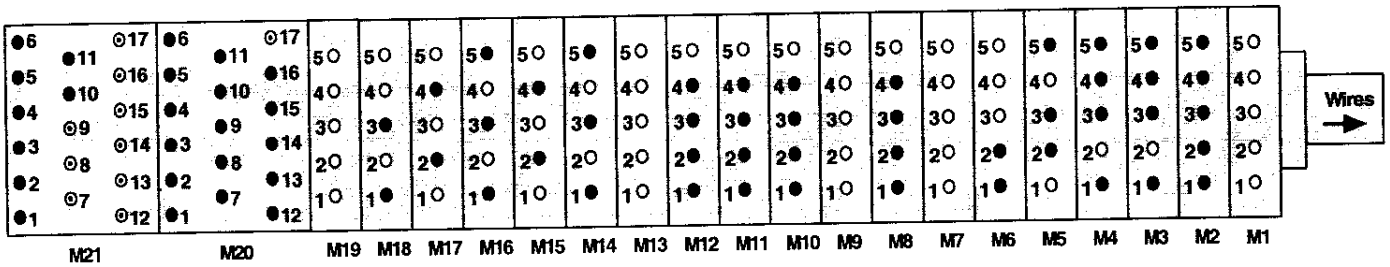

- ● Hole filled in grey: Wire soldered to pin.
- ⊙ Hole with dot in center: Pin exists but no wire soldered to it.
- ○ Hole filled in white: No pin. Hole is drilled out.

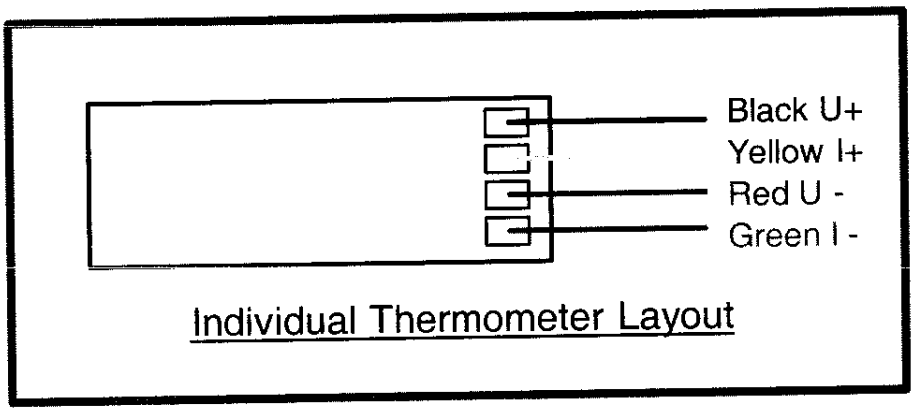

Note(s):

Ensure the Hypertronics cover has NOT been installed.

Technician(s) _____ Date 2/3/05

22.2 Assemble/Install Hypertronics Connectors, **without Cover** at **IP End** as per Q3 Module Assembly (ME-369900). Pin Numbers for connectors are shown in Table 22.2 below.

Table 22.2

Module	Pin	Fermilab Label	CERN Label	KEK Label	Description
M1	1				Blank Module
M1	2				
M1	3				
M1	4				
M1	5				
M2	1	VTa1Q1	EE1111	a1	Q1 Lead Voltage Tap "a" , primary
M2	2	VTa2Q1	EE1121	a2	Q1 Lead Voltage Tap "a", redundant
M2	3	VTc1Q1	EE1211	c1	Q1 Center Voltage Tap "c", primary
M2	4	VTc2Q1	EE1221	c2	Q1 Center Voltage Tap "c", redundant
M2	5	VTb1Q1	EE1311	b1	Q1 Lead Voltage Tap "b", primary
M3	1	VTc1Q2a	EE1212		Q2a Center Voltage Tap "c", primary
M3	2	Empty	Empty		No connection
M3	3	VTa2Q2a	EE1122		Q2a lead Voltage Tap "a", redundant
M3	4	VTa1Q2a	EE1112		Q2a Lead Voltage Tap "a", primary
M3	5	VTb2Q1	EE1321	b2	Q1 Lead Voltage Tap "b", redundant
M4	1	VTc2Q2a	EE1222		Q2a Center Voltage Tap "c", redundant
M4	2	Empty	Empty		No connection
M4	3	VTb1Q2a	EE1312		Q2a Lead Voltage Tap "b", primary
M4	4	VTb2Q2a	EE1322		Q2a Lead Voltage Tap "b", redundant
M4	5	VTb1Q2b	EE1612		Q2b lead Voltage Tap "b", primary
M5	1	Empty	Empty		No connection
M5	2	VTc2Q2b	EE1522		Q2b Center Voltage Tap "c", redundant
M5	3	VTc1Q2b	EE1512		Q2b Center Voltage Tap "c", primary
M5	4	Empty	Empty		No connection
M5	5	VTb2Q2b	EE1622		Q2b Lead Voltage Tap "b" redundant
M6	1	VTa1Q2b	EE1412		Q2b Lead Voltage Tap "a", primary
M6	2	VTa2Q2b	EE1422		Q2b Lead Voltage Tap "a", redundant
M6	3	Empty	Empty		No connection
M6	4	Empty	Empty		No connection
M6	5	Empty	Empty		No connection
M7	1				Blank Module
M7	2				
M7	3				
M7	4				
M7	5				

Table 22.2 (continued)

Module	Pin	Fermilab Label	CERN Label	KEK Label	Description
M8	1	VTH1	EE8121		Corrector voltage tap Q1-H1 (skew dipole) (on MCBX, MCBXH, A+ lead)
M8	2	VTV1	EE8111		Corrector voltage tap Q1-V1 (normal dipole) (on MCBX, MCBXV A+ lead)
M8	3	VTH2	EE8122		Corrector voltage tap Q2-H2 (skew dipole) (on MCBX, MCBXH, A+ lead)
M8	4	VTV2	EE8112		Corrector voltage tap Q2-V2 (normal dipole) (on MCBX, MCBXV, A+ lead)
M8	5	Empty	Empty		No connection
M9	1				Blank Module
M9	2				
M9	3				
M9	4				
M9	5				
M10	1	W1aQ1	EH8311+		Q1 Cryogenic Heater lead end - wire at top (CERN #1 I+)
M10	2	W2aQ1	EH8311-		Q1 Cryogenic Heater lead end - wire at bottom (CERN #1 I-)
M10	3	W1bQ1	EH8321+		Q1 Cryogenic Heater non-lead end - wire at top (CERN #2 I+)
M10	4	W2bQ1	EH8321-		Q1 Cryogenic Heater non-lead end - wire at bottom (CERN #2 I-)
M10	5	Empty	Empty		No connection
M11	1	W1aQ2A	EH8312+		Q2A Cryogenic Heater lead end - wire toward cold mass end plate (CERN #1 I+)
M11	2	W2aQ2A	EH8312-		Q2A Cryogenic Heater lead end - wire toward cold mass mag center (CERN #1 I-)
M11	3	W1bQ2A	EH8322+		Q2A Cryogenic Heater non-lead end- wire toward cold mass end plate (CERN #2 I+)
M11	4	W2bQ2A	EH8322-		Q2A Cryogenic Heater non-lead end- wire toward cold mass mag center (CERN #2 I-)
M11	5	Empty	Empty		No connection
M12	1	W1aQ2B	EH8332+		Q2B Cryogenic Heater lead end - wire toward cold mass end plate (CERN #1 I+)
M12	2	W2aQ2B	EH8332-		Q2B Cryogenic Heater lead end - wire toward cold mass mag center (CERN #1 I-)
M12	3	W1bQ2B	EH8342+		Q2B Cryogenic Heater non-lead end- wire toward cold mass end plate (CERN #2 I+)
M12	4	W2bQ2B	EH8342-		Q2B Cryogenic Heater non-lead end- wire toward cold mass mag center (CERN #2 I-)
M12	5	Empty	Empty		No connection

Table 22.2 (continued)

Module	Pin	Fermilab Label	CERN Label	KEK Label	Description
M13	1				Blank Module
M13	2				
M13	3				
M13	4				
M13	5				
M14	1	H1aQ1	YT1111+	HA1	Q1 Protection (Strip) Heater, ("a" circuit) (CERN lead #1+)
M14	2	Empty	Empty		No connection
M14	3	H2aQ1	YT1111-	HA2	Q1Protection (Strip) Heater, ("a" circuit) (CERN lead #1-)
M14	4	Empty	Empty		No connection
M14	5	H1bQ1	YT1121+	HB1	Q1 Protection (Strip) Heater, ("b" circuit) (CERN lead #2+)
M15	1	Empty	Empty		No connection
M15	2	H1aQ2a	YT1112+		Q2a Protection (Strip) Heater, 1-4 & 2-3 circuit (FNAL lead A+) (CERN lead #1+)
M15	3	Empty	Empty		No connection
M15	4	H2bQ1	YT1121-	HB2	Q1 Protection (Strip) Heater, ("b" circuit) (CERN lead #2-)
M15	5	Empty	Empty		No connection
M16	1	H2aQ2a	YT1112-		Q2a Protection (Strip) Heater, 1-4 & 2-3 circuit (FNAL lead A-) (CERN lead #1-)
M16	2	Empty	Empty		No connection
M16	3	H1bQ2a	YT1122+		Q2a Protection (Strip) Heater, 1-2 & 3-4 circuit (FNAL lead B+) (CERN lead#2+)
M16	4	Empty	Empty		No connection
M16	5	H2bQ2a	YT1122-		Q2a Protection (Strip) Heater, 1-2 & 3-4 circuit (FNAL lead B-) (CERN lead #2-)
M17	1	Empty	Empty		No connection
M17	2	H2aQ2b	YT1132-		Q2b Protection (Strip) Heater, 1-4 & 2-3 circuit (FNAL lead A-) (CERN lead #1-)
M17	3	Empty	Empty		No connection
M17	4	H1aQ2b	YT1132+		Q2b Protection (Strip) Heater, 1-4 & 2-3 circuit (FNAL lead A+) (CERN lead #1+)
M17	5	Empty	Empty		No connection
M18	1	H1bQ2b	YT1142+		Q2b Protection (Strip) Heater, 1-2 & 3-4 circuit (FNAL lead B+) (CERN lead#2+)
M18	2	Empty	Empty		No connection
M18	3	H2bQ2b	YT1142-		Q2b Protection (Strip) Heater, 1-2 & 3-4 circuit (FNAL lead B-) (CERN lead #2-)
M18	4	Empty	Empty		No connection
M18	5	Empty	Empty		No connection
M19	1				Blank Module
M19	2				
M19	3				
M19	4				
M19	5				

Table 22.2 (continued)

Module	Pin	Fermilab Label	CERN Label	KEK Label	Description
Note: Pin Numbers of Module M20 are not listed in numerical order.					
M20	1	TaQ1_I+	TT8311 I+		Q1 RTD, primary Wire color: Yellow
M20	2	TaQ1_I-	TT8311 I-		Q1 RTD, primary Wire color: Green
M20	3	TaQ1_V+	TT8311 U+		Q1 RTD, primary Wire color: Black
M20	4	TaQ1_V-	TT8311 U-		Q1 RTD, primary Wire color: Red
M20	5	TbQ1_I+	TT8321 I+		Q1 RTD, redundant: Wire color: Yellow
M20	6	TbQ1_I-	TT8321 I-		Q1 RTD, redundant: Wire color: Green
M20	11	TbQ1_V+	TT8321 U+		Q1 RTD, redundant: Wire color: Black
M20	10	TbQ1_V-	TT8321 U-		Q1 RTD, redundant: Wire color: Red
M20	9	TaQ2a_I+	TT8312 I+		Q2a RTD, primary Wire color: Yellow
M20	8	TaQ2a_I-	TT8312 I-		Q2a RTD, primary Wire color: Green
M20	7	TaQ2a_V+	TT8312 U+		Q2a RTD, primary Wire color: Black
M20	12	TaQ2a_V-	TT8312 U-		Q2a RTD, primary Wire color: Red
M20	13	TbQ2a_I+	TT8322 I+		Q2a RTD, redundant: Wire color: Yellow
M20	14	TbQ2a_I-	TT8322 I-		Q2a RTD, redundant: Wire color: Green
M20	15	TbQ2a_V+	TT8322 U+		Q2a RTD, redundant: Wire color: Black
M20	16	TbQ2a_V-	TT8322 U-		Q2a RTD, redundant: Wire color: Red
M20	17	Empty	Empty		No connection
Note: Pin Numbers of Module M21 are not listed in numerical order.					
M21	1	TaQ2b_I+	TT8332 I+		Q2b RTD, primary Wire color: Yellow
M21	2	TaQ2b_I-	TT8332 I-		Q2b RTD, primary Wire color: Green
M21	3	TaQ2b_V+	TT8332 U+		Q2b RTD, primary Wire color: Black
M21	4	TaQ2b_V-	TT8332 U-		Q2b RTD, primary Wire color: Red
M21	5	TbQ2b_I+	TT8342 I+		Q2b RTD, redundant: Wire color: Yellow
M21	6	TbQ2b_I-	TT8342 I-		Q2b RTD, redundant: Wire color: Green
M21	11	TbQ2b_V+	TT8342 U+		Q2b RTD, redundant: Wire color: Black
M21	10	TbQ2b_V-	TT8342 U-		Q2b RTD, redundant: Wire color: Red
M21	9	Empty	Empty		No connection
M21	8	Empty	Empty		No connection
M21	7	Empty	Empty		No connection
M21	12	Empty	Empty		No connection
M21	13	Empty	Empty		No connection
M21	14	Empty	Empty		No connection
M21	15	Empty	Empty		No connection
M21	16	Empty	Empty		No connection
M21	17	Empty	Empty		No connection

Hypertronics Connector Pin Locations Q3 Lead (IP) End
VIEW: Female (receptacle) solder cup side

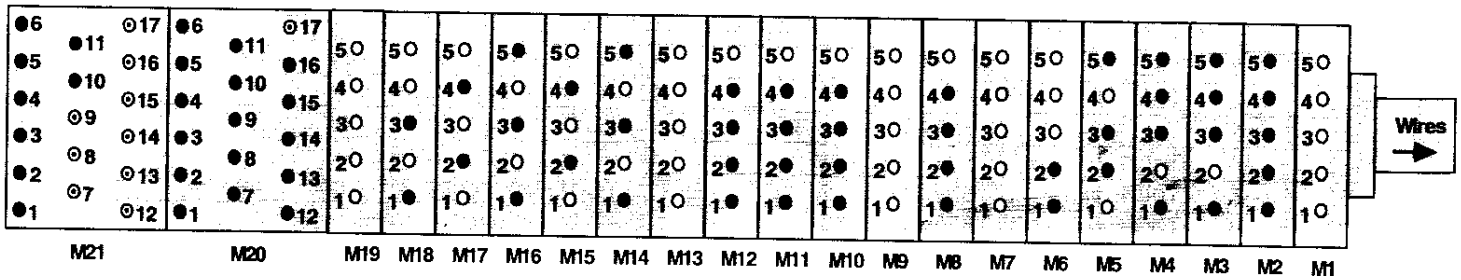

- ● Hole filled in grey: Wire soldered to pin.
- ⊙ Hole with dot in center: Pin exists but no wire soldered to it.
- ○ Hole filled in white: No pin. Hole is drilled out.

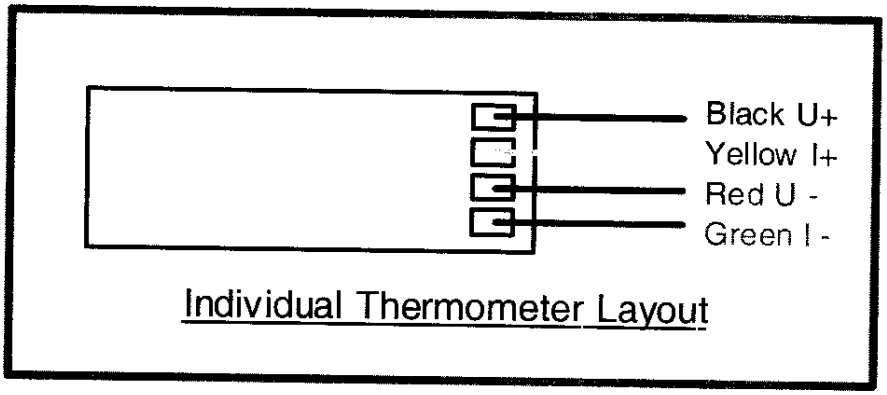

Note(s):

Ensure the Hypertronics cover has NOT been installed.

Technician(s) _____ Date 2/03/05

STOP

22.3 Inspect Hypertronics Connector. Ensure that it is free of flux and that Kapton has been installed properly.

Responsible Authority/Physicist _____ Date 3-FEB-2005

22.4 After LHC Project Physicist / designee has signed the above step, complete the installation of the Hypertronics.

Technician(s) _____ Date 02/03/2005

23.0 Final Electrical Inspection

23.1 Perform an electrical inspection on each of the Individual Quadrants and the Cold Mass. Refer to the Valhalla and Leader Free Standing Coil Measurement Procedure (ES-292306).

To measure the Resistance of a Q3 Cold Mass:

1. Use Valhalla Scientific 4300B digital micro-ohmmeter.
2. Set Test Current to 0.1 amp.
3. Set Scale to 2V full scale.
4. Turn temperature compensation on.
5. Turn test current off.
6. Connect I_{HI} to Q4 inner power lead as shown in figure.
7. Connect I_{LO} to Q3 inner power lead as shown in figure.
8. Turn test current on.
9. Connect V_{HI} and V_{LO} to voltage taps as shown in resistance table.
10. To measure Total with leads, connect V_{HI} to Q4 power lead and V_{LO} to Q3 power lead.
11. Read resistance and record in traveler.

(Q3) Resistance				Nominal 3.35 to 3.45 Ω
Voltage Tap Serial Numbers				Total Resistance
Connect	Fermi	CERN	KEK	
V_{HI}	VTa1Q3	EE1113	a1	3.402 Ω
V_{LO}	VTc1Q3	EE1213	c1	
V_{HI}	VTc1Q3	EE1213	c1	3.397 Ω
V_{LO}	VTb1Q3	EE1313	b1	
V_{HI}	VTa1Q3	EE1113	a1	6.798 Ω
V_{LO}	VTb1Q3	EE1313	b1	

		Total Resistance with Leads
		Nominal 6.75 to 6.85 Ω
V_{HI}	Q4 Power Lead	6.831 Ω
V_{LO}	Q3 Power Lead	

Technician(s)

2-4-05
Date

Check resistance of Redundant Voltage Taps.

Q3 Redundant Voltage Taps				Nominal 3.35 to 3.45 Ω
Connect	Fermi	CERN	KEK	Resistance
V_{HI}	VTa2Q3	EE1123	a2	3.402 Ω
V_{LO}	VTc2Q3	EE1223	c2	
V_{HI}	VTc2Q3	EE1223	c2	3.397 Ω
V_{LO}	VTb2Q3	EE1323	b2	

Technician(s)

2-4-05
Date

To measure Ls and Q of a Q3 Cold Mass:

1. Use Hewlett Packard HP4284A digital LCR meter.
2. Turn line switch to on. The words "Measurement Display" should now be highlighted in the upper left corner of the display screen.
3. Use cursor buttons (shown in figure with arrows) to toggle down until "function" is highlighted near the upper left corner of the display screen.
4. Push the lowest of the five buttons to the right of display 3 times. (This button is shaded gray in the figure) The line in the display screen next to the second button down should now read "Ls-Q" and "function" near the upper left corner of the display should have the option "Ls-Q" chosen.
5. Scroll to "integer" using the cursor buttons. "Integer" will have the option "medium" chosen.
6. Press the 3rd button of five. The word "medium" should change to "long".
7. Connect H_{cur} to Q4 power lead as shown in figure.
8. Connect L_{cur} to Q3 power lead as shown in figure.
9. Connect H_{pot} and L_{pot} to voltage taps as shown in table.
10. Read Ls and Q from display and record in traveler.

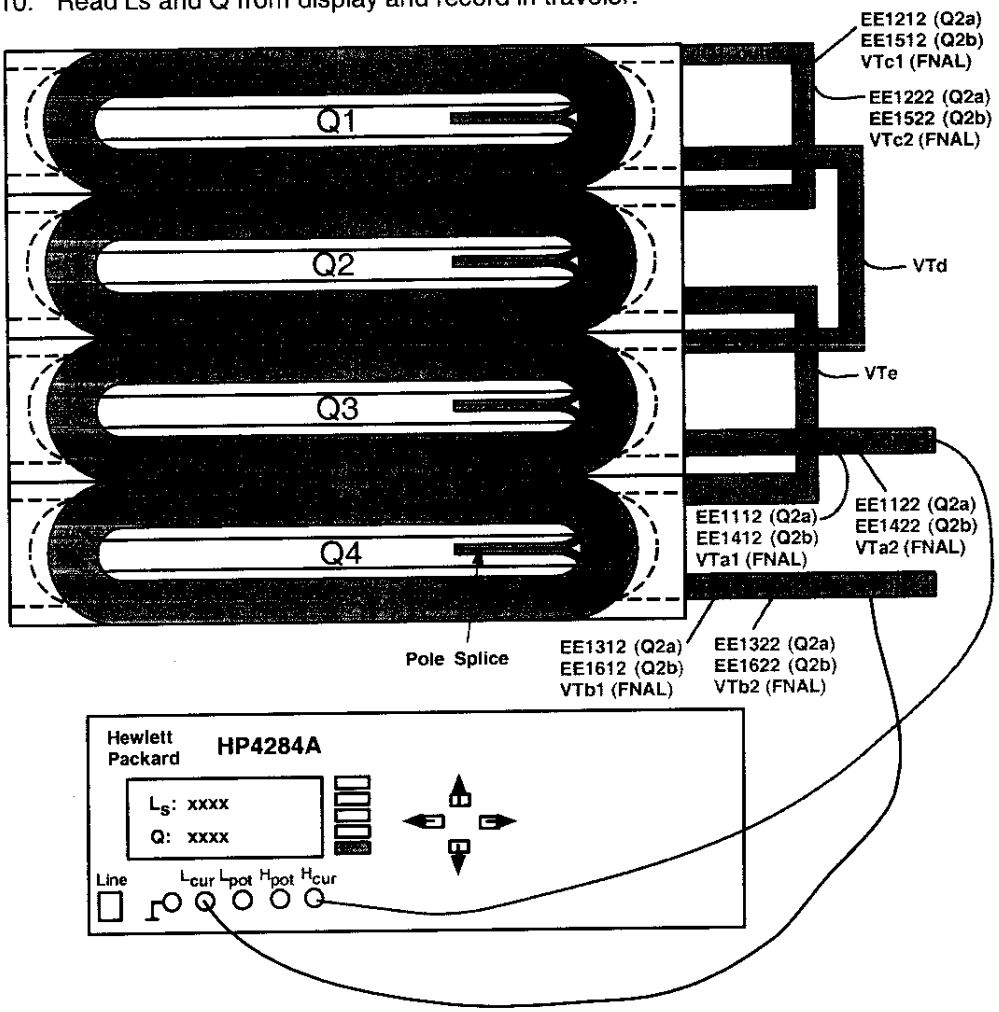

(Q3) Inductance				Nominal 15 to 16 mH
Voltage Tap Serial Numbers				Total Inductance
Connect	Fermi	CERN	KEK	
H_{POT}	VTa1Q3	EE1113	a1	15.190 mH
L_{POT}	VTc1Q3	EE1213	c1	
H_{POT}	VTc1Q3	EE1213	c1	15.211 mH
L_{POT}	VTb1Q3	EE1313	b1	

				Nominal 30 to 32 mH
				Total Inductance
H_{POT}	VTa1Q3	EE1113	a1	30.395 mH
L_{POT}	VTb1Q3	EE1313	b1	

(Q3) Q-Factor				Nominal 1.0 to 1.2
Voltage Tap Serial Numbers				Total Q
Connect	Fermi	CERN	KEK	
H_{POT}	VTa1Q3	EE1113	a1	1.1
L_{POT}	VTc1Q3	EE1213	c1	
H_{POT}	VTc1Q3	EE1213	c1	1.1
L_{POT}	VTb1Q3	EE1313	b1	

				Nominal 1.0 to 1.2
				Total Q
H_{POT}	VTa1Q3	EE1113	a1	1.1
L_{POT}	VTb1Q3	EE1313	b1	

Technician(s)

2-4-05
Date

To measure the resistance of a Thermometer (RTD):

1. Use Hewlett Packard HP3457A digital multimeter.
2. Record temperature of building within +/- 5 degrees.
3. Press line button to turn line on.
4. Connect wires as shown in Figure below.
   U+ (Black) to Sense HI
   I+ (Yellow) to Input HI
   U- (Red) to Sense LO
   I- (Green) to Input LO
5. Push blue button (function key) once.
6. Push OHMF button.
7. Verify arrow in readout is above the 4WΩ (meaning a 4 wire resistance measurement).
8. Read resistance in ohms and record in traveler.

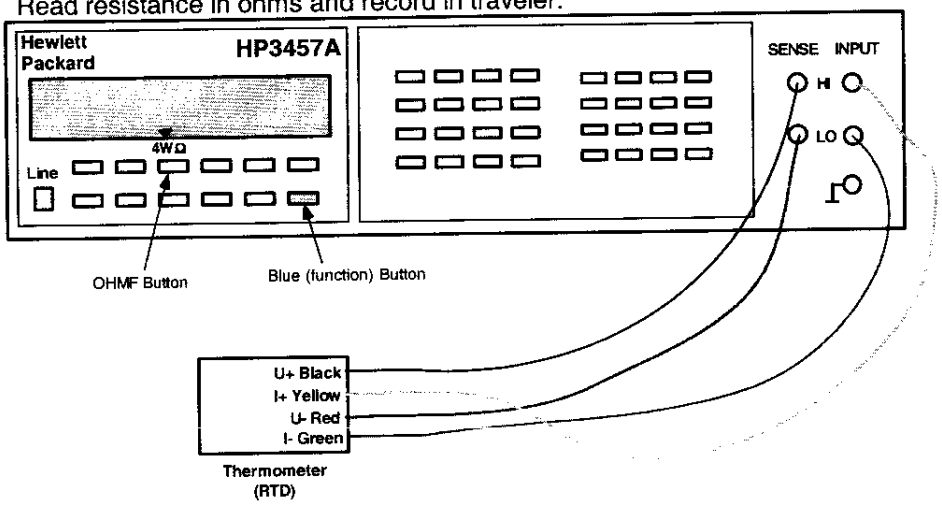

To measure the resistance of a Cryogenic (Warm-up) Heater

1. Use Hewlett Packard HP3457A digital multimeter.
2. Record temperature of building within +/- 5 degrees.
3. Press line button to turn line on.
4. Connect wires as shown in Figure below.
5. Push blue button (function key) once.
6. Push OHMF button.
7. Verify arrow in readout is above the 4WΩ (meaning a 4 wire resistance measurement).
   Note: Although this is technically a 4 wire measurement, it is effectively a 2 wire measurement, since there are only 2 wires connected to each heater.
8. Read resistance in ohms and record in traveler.

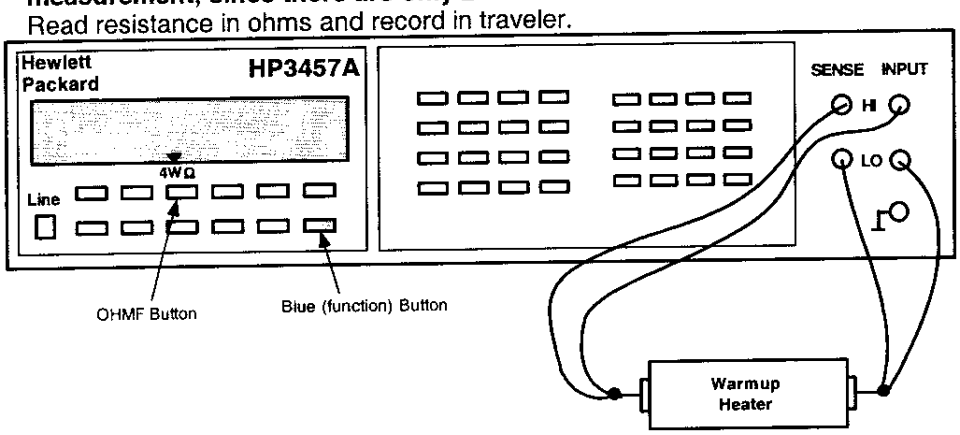

Q3 - RTD's and Cryogenic (warm-up) Heaters				
Temperature of Building (± 5°): 70°				
Component	**Fermi**	**CERN**	**Range**	**Resistance**
Q3 RTD, primary	TaQ3	TT8313	60 to 70 Ω	68.120 Ω
Q3 RTD, redundant	TbQ3	TT8323	60 to 70 Ω	66.975 Ω
Q3 Cryogenic (warm-up) Heater (LE) - wire at top (CERN #1 I+)	W1aQ3	EH8313+	16 to 18.5 Ω	17.74 Ω
Q3 Cryogenic (warm-up) Heater (LE) - wire at bottom (CERN #1 I-)	W2aQ3	EH8313-		
Q3 Cryogenic (warm-up) Heater (Non-LE) - wire at top (CERN #2 I+)	W1bQ3	EH8323+	16 to 18.5 Ω	17.49 Ω
Q3 Cryogenic (warm-up) Heater (Non-LE) - wire at bottom (CERN #2 I-)	W2bQ3	EH8323-		

Technician(s) 2-4-05 Date

Using the Hewlett Packard HP3457A digital multimeter, measure the Protection (Strip) Heater Resistance for Q3.

Q3 Protection (Strip) Heater Resistance					
Fermi	**CERN**	**KEK**	**Description**	**Limit**	**Resistance**
H1aQ3	YT1113+	HA1	Circuit A	28 to 32 Ω	30.03 Ω
H2aQ3	YT1113-	HA2			
H1bQ3	YT1123+	HB1	Circuit B	28 to 32 Ω	30.14 Ω
H2bQ3	YT1123-	HB2			

Technician(s) 2-4-05 Date

23.2 Using the Valhalla 4300B, connect 10mA applied voltage thru the corrector Power Leads. Measure Resistance and record in the table below.

Corrector Bus Leads

	V3A	V3B	H3A	H3B	B3A	B3B	B6A	B6B	
	V2A	V2B	H2A	H2B	B4A	B4B	A4A	A4B	
	V1A	V1B	H1A	H1B	A2A	A2B	A3A	A3B	

(View Looking from DFBX into Q3)

Corrector Assembly	Corrector Element	Readout Labels		Power Labels	Resistance
MQSX	MQSX	A2A	EE8223	A2A, A2B	.06
		EE8223	A2B		7.57
		A2A	A2B		7.45
MCBXA	MCBXV	V3A	EE8113	V3A, V3B	.02
		EE8113	V3B		17.38
		V3A	V3B		17.4
	MCBXH	H3A	EE8123	H3A, H3B	.01
		EE8123	H3B		21.35
		H3A	H3B		21.36
	MCTX	B6A	EE8613	B6A, B6B	.02
		EE8613	B6B		98.12
		B6A	B6B		98.14
	MCSX	B3A	EE8313	B3A, B3B	.02
		EE8313	B3B		27.78
		B3A	B3B		27.80
MCSOX	MCOSX	A4A	EE8423	A4A, A4B	.01
		EE8423	A4B		11.83
		A4A	A4B		11.85
	MCOX	B4A	EE8413	B4A, B4B	.02
		EE8413	B4B		12.83
		B4A	B4B		12.84
	MCSSX	A3A	EE8323	A3A, A3B	.01
		EE8323	A3B		13.38
		A3A	A3B		13.39

Technician(s)

2-9-05
Date

XXX 23.3 Hipot according to table below. Hipot to 3kV. Maximum leakage is 3μA.

STOP

Have Crew Chief verify setup and sign below before continuing.

Crew Chief _____ Date 2/4/05

Hipot Heaters to Coil and Ground.

High Potential	Grounded	Floating	Leakage
All Strip Heaters	Coils, Yoke, Q3 Instrumentation Bus, Lead and Corrector Coil Busses, RTD's and Warm-up Heaters	Nothing	.543 μA

Hipot Coil to Heaters and Ground.

High Potential	Grounded	Floating	Leakage
All Coils	Strip Heaters, Yoke, Q3 Instrumentation Bus, 8kA and 5kA Lead Busses and Corrector Coil Busses, RTD's and Warm-up Heaters	Nothing	.944 μA

Technician(s) _____ Date 2-4-05

STOP

23.4 Ensure electrical measurements are acceptable and confirm Hypertronics Connector has been installed properly.

Responsible Authority/Physicist _____ Date 2-4-05

24.0 Production Complete

24.1 Process Engineering verify that the Q3 Cold Mass Module Assembly Traveler (5520-TR-333729) is accurate and complete. This shall include a review of all steps to ensure that all operations have been completed and signed off. Ensure that all Discrepancy Reports, Nonconformance Reports, Repair/Rework Forms, Deviation Index and dispositions have been reviewed by the Responsible Authority for conformance before being approved.

Comments:

This traveler was issued to reflect the changes made for Revision A. Some earlier steps will have signoff dates which precede the issue date of this traveler - J. Spostak 12/22/04 LHC Process Eng.

J. Spostak
Process Engineer/Designee

AUG 31 2005
Date

TD - Engineering Fabr tion Component Kit List

ORIGINA

Process Engineering

Component Serial No.: LMQXC02
Kit submitted by: John Szostak | Ext. 2003
Fermi ID No.: 02943C
Date submitted: 23-Sep-04
Need date: 12-Oct-04
Deliver to: ICB
Use with Traveler No.: 333729
Job No.: 248
M&S task number: 300 | 1.1.1.3.4
Drawing Title: Q3 MODULE ASSEMBLY
Drawing No.: ME-369900 | Rev. NONE
Drawing Title: Q3 COLD MASS WELDED ASSEMBLY
Drawing No.: ME-369529 | Rev. B

Material Control

Parts available

Verified by: M. Schmidt
Fermi ID No.: 04223N
Date submitted to stockroom: 6-Oct-04

Parts issued

Issued by:
Fermi ID No.: 12648
Date issued: 10/22/04
Parts received by E&F: John Szostak
Fermi ID No.: 02943C
Date received by E&F: 10/22/04

ONLY 2 where needed

	Description	Dwg Size	Number	Rev	Unit	Quantity Required	Location	Quantity Issued	E&F Verified	Routing Form Number	Spares Number / Comment
1	WARM-UP HEATER	MA	369834	A	EA	2	IB4 Bin	2		79919	23 pcs.
2	RTD ASSEMBLY	MA	369835	A	EA	4	R2,S2,L5	4		79920	31 pcs.
3	RTD MOUNTING BLOCK	MB	369893	B	EA	2	IB4 Bin	2		80543	30 pcs.
4	.010" SOLDER STRIP	MA	369904	*	m	A / R			—		
5	KESTER 135 FLUX	MA	369911	*		A / R			—		
6	SHCS #4-40 x 1/4" LG. S.S.	MA	369938	*	EA	4	IB4 Bin	4		79052	112 pcs.
7	WARM-UP HEATER BASE PLATE	MA	369997	A	EA	2	IB4 Bin	2		80096	24 pcs.
8	#10-32 x 5/8" LONG SHCS - S.S.	MA	393176	*	EA	2	IB4	2		82115	100 pcs.
9	RTD SCREWS	MA	393180	*	EA	8	IB4 Bin	8		79631	923 pcs.
10	RTD WASHERS	MA	393181	*	EA	8	IB4 Bin	8		81226	174 pcs.
11	IP (LEAD) END BUS SPLICE CLAMP ASSEMBLY / Q3	MD	430031	B	EA	1	R1,3,2	1		81915	8 pcs.

ONLY 4 needed here

ORIGINAL

TD - Engineering Fabrication Component Kit List

	Description	Dwg Size	Number	Rev	Unit	Quantity Required	Location	Quantity Issued	E&F Verified	Routing Form Number	Spares Number / Comment
12	NOMEX STRIP - .010" THICK	MB	430064	*		ICB HAS			—		
13	FACE PLATE FOR MCBXA CORRECTOR LEADS	MD	430083	*	EA	1	R1,3,3		—		7 pcs. APR.
14	CORRECTOR WIRE CHANNEL BLOCK	MB	430091	*	EA	2	R2,2,2	2		82010	8 pcs.
15	CORRECTOR WIRE SPLICE CLAMP COVER	MB	430092	*	EA	2	R2,2,3	2		82011	8 pcs.
16	CENTER CABLE INSULATOR - BOTTOM	MC	430110	*	EA	1	R2,2,2	1		82013	16 pcs.
17	INSULATOR CLAMP - TOP	MC	430111	*	EA	1					Not Found
18	BUS CABLE UPPER SUSPENSION BRACKET	MB	430115	*	EA	1	IB4		—		0
19	BUS CABLE LOWER SUSPENSION BRACKET	MC	430116	*	EA	1	IB4		—		0
20	MCSOX SPLICE PLATE MOUNTING BAR	MC	430128	A	EA	2	R2,2,3		—		0
21	MCSOX SPLICE PLATE MOUNTING RING	MC	430129	*	EA	1	R2,2,3	1		82144	8 pcs. - Accepted
22	MCSOX FACE PLATE	MD	430130	B	EA	1	IB4	1		82185	8 pcs. - Accepted
23	~~MCSOX CORRECTOR SPLICE~~ FACE PLATE	~~MD~~	~~430130~~	~~*~~	~~EA~~	~~1~~					~~See above~~
24	NON-IP (LEAD END) CORRECTOR BUS BUNDLE BRACKET Modify	MC	430134	*	EA	1	R2,2,3	1		81942	7 pcs.
25	CLAMP - CORRECTOR LEADS	MB	430135	*	EA	1	R2,2,3	1		81967	8 pcs.
	HYPERTRONICS CONNECTOR ASSEMBLY 28 UNITS - Q3 MAGNET (LEAD END)	MB	418118	*	EA	1					Place part #'s 26-35 in one bag and label as MB-418118
26	28 UNIT MALE (PIN) RACK	MA	418106	A	EA	1	R1,S1,L2	1		N/A	9 pcs.
27	TIE-DOWN LINK	MA	418109	A	EA	4	R1,1,2	4		79854	69 pcs.
28	CLAMPING BAR	MA	418112	*	EA	1	IB4 Bin	1		79990	23 pcs.
29	GROMMET	MA	418113	*	EA	1	IB4 Bin	1		N/A	22 pcs.
30	THREADED STUD ASSEMBLY	MA	418114	B	EA	4	IB4 Bin	4		81575	103 pcs.

RCVD IN A.P.R.

Remove

ORIGINA

TD - Engineering Fabr tion Component Kit List

	Description	Dwg Size	Number	Rev	Unit	Quantity Required	Location	Quantity Issued	E&F Verified	Routing Form Number	Spares Number / Comment
31	SUPPORT ARM WELDMENT (28 UNIT)	MC	418115	*	PAIR	1	IB4 Bin	1	QA	80120	9 pcs.
32	SCREW - #6-32 X 3/8 LG.	MA	418116	*	EA	4	R1,1,2	4	QA	79892	88 pcs.
33	SCREW - #4-40 X 1/2 LG.	MA	418117	*	EA	4	R1,1,2	4	QA	79891	144 pcs.
34	ANTI-ARC KAPTON	MA	418143	*	EA	17	R1,1,2	17	QA	N/A	1341 pcs.
35	CONNECTOR COVER & ACCESS COVER (28-UNITS)	MC	418067-A	A2	PAIR	1	R1,1,2	1	QA	N/A	7 pcs.
HYPERTRONICS CONNECTOR ASSEMBLY 23 UNITS - Q3 MAGNET (RETURN END)		MB	418132	*	EA	1			QA		Place part #'s 36-41 in one bag and label as MB-418132
36	CLAMPING BAR	MA	418112	*	EA	1	IB4 Bin	1	QA	79990	23 pcs.
37	GROMMET	MA	418113	*	EA	1	IB4 Bin	1	QA	N/A	22 pcs.
38	THREADED STUD ASSEMBLY	MA	418114	*	EA	4	IB4 Bin	4	QA	81575	103 pcs.
39	SCREW - #6-32 X 3/8 LG.	MA	418116	*	EA	4	R1,1,2	4	QA	79892	88 pcs.
40	23 UNIT FEMALE (PIN) RACK	MA	418136	A	EA	1	R1,S1,L2	1	QA	N/A	5 pcs.
41	CONNECTOR COVER & ACCESS COVER (23-UNITS)	MC	418067-A	A1	PAIR	1	R1,1,2	1	QA	N/A	8 pcs.
Q3 LEAD END SPIDER ASSEMBLY		MD	430072	*	EA	1					
42	SHCS #8-32 x .75 LG. S.S.	MA	393071	*	EA	4	IB4 Bin	4	QA	81436	76 pcs.
43	SHCS #6-32 x 1.00 LG. S.S.	MA	393082	*	EA	2	IB4 Bin	2	QA	81360	88 pcs.
44	WASHER, NARROW, FLAT #6 S.S.	MA	393088	*	EA	2	IB4 Bin	2	QA	81361	488 pcs.
45	HEX NUT #6-32 UNC-2B S.S.	MA	393089	*	EA	2	IB4 Bin	2	QA	81362	88 pcs.
46	BUS SPIDER ASSEMBLY	MD	430044	C	EA	1	IB4 Bin	1	QA	81469	63 pcs.
47	BUS SPIDER HOUSING - BOTTOM	MB	430055	A	EA	1	IB4 Bin	1	QA	81429	12 pcs.
48	BUS SPIDER HOUSING - COVER PLATE	MB	430073	*	EA	1	IB4 Bin	1	QA	81455	8 pcs.

ORIGINAL

TD - Engineering Fabr tion Component Kit List

	Description	Dwg Size	Number	Rev	Unit	Quantity Required	Location	Quantity Issued	E&F Verified	Routing Form Number	Spares Number / Comment
49	Q3 INSTRUMENTATION WIRE FEEDTHRU ASSEMBLY	MB	430074	*		ICB HAS			—		
50	SPIDER BUMPER	MB	430075	*	EA	2	IB4 Bin	2	[illegible]	81447	128 pcs.
51	NON-IP END BUS CROSSOVER BLOCK ASSEMBLY	MD	430081	*	EA	1	—				NF
52	IP END BUS CROSSOVER BLOCK ASSEMBLY	MD	430095	A	EA	1	—				NF
	Q3 NON LEAD END SPIDER ASSEMBLY	MB	430096	*	EA	1	R1,1,1	1	[illegible]	82008	8 pcs.
53	1/4 x 5/8 LG. SHOULDER SCREW S.S.	MA	393067	*	EA	2	IB4 Bin	2	[illegible]	80647	59 pcs.
54	SPRING, COMPRESSION	MA	393073	*	EA	2	IB4 Bin	2	[illegible]	806	267 pcs.
55	#10-32 x 2 in. LONG FHCS S.S.	MA	393173	*	EA	4	—				NF
56	#10-32 HEX NUT S.S.	MA	393283	*	EA	4	IB4 Bin	4	[illegible]	81069	164 pcs.
57	BUS WIRE PLATE - TOP	MB	430010	A	EA	1	R2,2,4	1	[illegible]	80988	36 pcs.
58	TENSIONER BLOCK	MB	430047	A	EA	1	—				NF
59	CORRECTOR WIRE BLOCK	MB	430097	*	EA	1	—				NF
60	CORRECTOR WIRE BOTTOM PLATE	MB	430098	*	EA	1	—				NF
61	STANDOFF SPACER	MB	430099	*	EA	4	—				NF
62	BUS WIRE SPACER PLATE	MA	430101	*	EA	1	—				NF
63	BUS WIRE PLATE - BOTTOM	MA	430102	*	EA	1	—				NF
64	SIDE CABLE CLAMP ASSEMBLY	MC	430103	*	EA	4	R1,3,3	4	[illegible]	82012	32 pcs.
65	MODIFIED CABLE CLAMP ASSEMBLY	MC	430136	*	EA	2	R1,2,4	2	[illegible]	82014	18 pcs.
66	STANDOFF WELDMENT	MC	430104	*	EA	1			—		
67	STANDOFF BRACKET	MB	430107	*	EA	1	—				NF

ORIGINAL

TD - Engineering Fabr tion Component Kit List

	Description	Dwg Size	Number	Rev	Unit	Quantity Required	Location	Quantity Issued	E&F Verified	Routing Form Number	Spares Number / Comment
~~68~~	SIDE INSULATOR MOUNT	MB	430108	*	EA	1	—				NF
~~69~~	CABLE BUS ROLLER ASSEMBLY	MD	430123	*	EA	1	IB4		—		0
70	INSULATED BEAM TUBE	MD	369838	A	EA	1	ICB		—		12 pcs.
71	MCBX CORRECTOR MOUNTING RING	ME	390037	C	EA	1	P/N	1	[illegible]	80790	12 pcs.
72	COLD MASS ASSEMBLY (KEK)	ME	390108	E		ICB HAS			—		
73	MQSXA CORRECTOR MOUNTING RING	MD	390209	C	EA	1	P/N	1	[illegible]	80791	8 pcs.
74	IP END DOME ASSEMBLY	ME	390221	C	EA	1	P/N	1	[illegible]	78710	8 pcs.
75	MCBX CORRECTOR MTG FLAT WASHER	MB	390228	*	EA	12	IB4 Bin	12	[illegible]	80991	37 pcs.
76	1/2"-20 UNF X 2.0" LG. SILVER PLATED SCREW FOR Q1/Q3 MQSXA	MA	390246	*	EA	8	IB4 Bin	8	[illegible]	74618	143 pcs.
77	1/2"-20 UNF X 3.0" LG. SILVER PLATED SCREW FOR Q1/Q3 MCBX	MA	390247	*	EA	4	IB4 Bin	4	[illegible]	74622	71 pcs.
78	TRANSPORT RESTRAINT ADJ. SCREW	MB	390270	A	EA	4	IB4 Bin	4	[illegible]	76665	52 pcs.
79	BEAM TUBE FLANGE	MC	390300	B	EA	2	R10,1,2	2	[illegible]	77028	36 pcs. *
80	MCBX CORRECTOR MAGNET WELDMENT	MD	390312	*		ICB HAS			—		
81	SHIM, 0.05 (.002")	MA	390482	*	EA	8	R2,S2,L4	8	[illegible]	79123	97 pcs.
82	SHIM, 0.13 (.005")	MA	390483	*	EA	8	R2,S2,L4	8	[illegible]	79124	104 pcs.
83	SHIM, 0.25 (.010")	MA	390484	*	EA	8	R2,S2,L4	8	[illegible]	79125	87 pcs.
84	SHIM, 0.38 (.015")	MA	390485	*	EA	8	R2,S2,L4	8	[illegible]	79126	75 pcs.
85	A34B4 (MCSOX) CORRECTOR MOUNTING RING	ME	390664	*	EA	1	R1,S3,L3	1	[illegible]	80927	8 pcs.
86	WELD BACKING RING	MC	390666	*	EA	1	R7,3,4	1	[illegible]	80910	8 pcs.
87	NON-IP END BODY EXTENSION WELDMENT	ME	390667	*	EA	1	Site 38	1	[illegible]	81846	8 pcs.

ORIGINAL

TD - Engineering Fabr tion Component Kit List

	Description	Dwg Size	Number	Rev	Unit	Quantity Required	Location	Quantity Issued	E&F Verified	Routing Form Number	Spares Number / Comment
88	NON-IP END DOME MODIFIED	MD	390668	*	EA	1	Site 38	1	[illegible]	81847	8 pcs.
89	NO. 10 (.190") - 32UNF X .188" LG. CUP POINT SET SCREW; 18-8 SST	MA	393030		EA	8	IB4 Bin		—		2 pcs./APR
90	A34B4 CORRECTOR MAGNET (MCSOX CORRECTOR MAGNET)		Item #12 on ME-390529	*		ICB HAS			—		
91	MQSXA CORRECTOR MAGNET		Item #9 on ME-390529	*		ICB HAS			—		

ADDITIONAL PARTS REQUEST

ADDITIONAL PARTS REQUEST FORM SHALL BE USED TO ACCESS ALL ITEMS FROM INVENTORY WITH THE EXCEPTION OF PARTS KITS.

THIS FORM MUST BE SIGNED BY AN ACQUISITIONER BEFORE BRINGING TO THE STOCKROOM

MAGNET OR COIL # LMQXC-02

DATE REQUESTED 1-05-05

BUDGET CODE 300/1.1.1.3.4

JOB TICKET #

MACHINE SHOP REQ. #

PURCHASE RELEASE #

REQUESTED BY Damon Bice

DELIVER TO ICB

NEED BY DATE 1-05-05

MMR #

PO #

OTHER

PARTS STATUS (CHECK ONE)

- ☐ DEFECTIVE PARTS ISSUED
- ☐ DEFECTIVE ASSEMBLY
- ☐ INDIVIDUAL PARTS
- ☐ PARTS SCRAPPED
- ☒ MISSING FROM KIT ALREADY ISSUED
- ☐ CONSUMABLES
- ☐ A/R ITEMS
- ☐ PARTS LOST

ACQUISITIONER SIGNATURE Marsha Schmidt **ID#** 9223 **DATE** 1/5/05

PLEASE INDICATE REVISION REQUIRED

LOCATION	PART #	REV	QTY	DESCRIPTION	RF #	SIR #
R1,2,2	MA 393405	C	4	1/4-28 UNF		

STOCKROOM SIGNATURE _____ **ID#** _____ **DATE** _____

PARTS DELETED FROM DATABASE _____ **ID#** _____ **DATE** _____

A COPY OF THIS FORM IS TO BE INCLUDED IN WITH THE TRAVELER

PARTS RECEIVED BY [illegible] **ID#** 12413 **DATE** 1-5-05

ADDITIONAL PARTS REQUEST

ADDITIONAL PARTS REQUEST FORM SHALL BE USED TO ACCESS ALL ITEMS FROM INVENTORY WITH THE EXCEPTION OF PARTS KITS.

THIS FORM MUST BE SIGNED BY AN ACQUISITIONER BEFORE BRINGING TO THE STOCKROOM

MAGNET OR COIL # LMQXC02

DATE REQUESTED 1/05/05

BUDGET CODE 300/1.1.1.3.4

JOB TICKET #

MACHINE SHOP REQ. #

PURCHASE RELEASE #

REQUESTED BY Steve Gould

DELIVER TO ICB

NEED BY DATE 1/05/05

MMR #

PO #

OTHER

PARTS STATUS (CHECK ONE)

- ☐ DEFECTIVE PARTS ISSUED
- ☐ DEFECTIVE ASSEMBLY
- ☒ INDIVIDUAL PARTS
- ☐ PARTS SCRAPPED
- ☐ MISSING FROM KIT ALREADY ISSUED
- ☐ CONSUMABLES
- ☐ A/R ITEMS
- ☐ PARTS LOST

ACQUISITIONER SIGNATURE [signature] ID# 723 DATE 1/5/05

PLEASE INDICATE REVISION REQUIRED

LOCATION	PART #	REV	QTY	UOM	DESCRIPTION	RF #	SIR #
IB#4-BIN	393291		2	Each	FHCS M12X1.75X20mm	80694	

STOCKROOM SIGNATURE [signature] ID# 12698 DATE 1-5-05

PARTS DELETED FROM DATABASE ID# DATE

A COPY OF THIS FORM IS TO BE INCLUDED IN WITH THE TRAVELER

PARTS RECEIVED BY Steve Gould ID# 4965 DATE 1/5/05

ADDITIONAL PARTS REQUEST

ADDITIONAL PARTS REQUEST FORM SHALL BE USED TO ACCESS ALL ITEMS FROM INVENTORY WITH THE EXCEPTION OF PARTS KITS.

THIS FORM MUST BE SIGNED BY AN ACQUISITIONER BEFORE BRINGING TO THE STOCKROOM

MAGNET OR COIL # *LMQXC02*

REQUESTED BY *Steve Gould*

DATE REQUESTED *11/04/04*

DELIVER TO *ICB*

BUDGET CODE *300/1.1.1.3.4(LCD)*

NEED BY DATE *11/04/04*

JOB TICKET # _____

MMR # _____

MACHINE SHOP REQ. # _____

PO # _____

PURCHASE RELEASE # _____

OTHER _____

PARTS STATUS (CHECK ONE)

- ☐ DEFECTIVE PARTS ISSUED
- ☐ PARTS SCRAPPED
- ☐ A/R ITEMS
- ☐ DEFECTIVE ASSEMBLY
- ☐ MISSING FROM KIT ALREADY ISSUED
- ☒ INDIVIDUAL PARTS
- ☐ CONSUMABLES
- ☐ PARTS LOST

ACQUISITIONER SIGNATURE [signature] **ID#** 4223 **DATE** 11/4/04

PLEASE INDICATE REVISION REQUIRED

IN STOCK	LOCATION	PART #	REV	QTY	UOM	DESCRIPTION	RF #	SIR #
13	*IB#4-BIN*	*430009*		*1*	*Each*	*Q3 Anchor Instr. Tube*	70811	
51	*R1,2,4*	*369827*	*A*	*3*	*Each*	*Wire Feed-Thru Tube*	77315	
3	*R1,S2,L3*	*430011*		*1*	*Each*	*Q3 Instr.Wire Tube*	80212	
77	*IB#4-BIN*	*369996*	*A*	*3*	*Each*	*Instr. Tube-sleeve*	80657	

STOCKROOM SIGNATURE [signature] **ID#** 126911 **DATE** 11/4/04

PARTS DELETED FROM DATABASE _____ **ID#** _____ **DATE** _____

A COPY OF THIS FORM IS TO BE INCLUDED IN WITH THE TRAVELER

PARTS RECEIVED BY [signature] **ID#** 4990 **DATE** 11-4-04

ADDITIONAL PARTS REQUEST

ADDITIONAL PARTS REQUEST FORM SHALL BE USED TO ACCESS ALL ITEMS FROM INVENTORY WITH THE EXCEPTION OF PARTS KITS.

THIS FORM MUST BE SIGNED BY AN ACQUISITIONER BEFORE BRINGING TO THE STOCKROOM

MAGNET OR COIL # *LMQXC02*

REQUESTED BY *Steve Gould*

DATE REQUESTED *12/16/04*

DELIVER TO *ICB-Steve Gould*

BUDGET CODE *300/1.1.1.3.4(LCD)*

NEED BY DATE *12/16/04*

JOB TICKET # _____

MMR # _____

MACHINE SHOP REQ. # _____

PO # _____

PURCHASE RELEASE # _____

OTHER _____

PARTS STATUS (CHECK ONE)

☐ DEFECTIVE PARTS ISSUED ☐ PARTS SCRAPPED ☐ A/R ITEMS

☐ DEFECTIVE ASSEMBLY ☐ MISSING FROM KIT ALREADY ISSUED

☒ INDIVIDUAL PARTS ☐ CONSUMABLES ☐ PARTS LOST

ACQUISITIONER SIGNATURE Marsha Ahmoff **ID#** 4223 **DATE** 12/16/04

PLEASE INDICATE REVISION REQUIRED

IN STOCK	LOCATION	PART #	REV	QTY	UOM	DESCRIPTION	RF #	SIR #
9	*R1.3.3*	*430146*		*1*	*Each*	*Q3 Voltage Splice Block*	82314	

COPY

STOCKROOM SIGNATURE _____ **ID#** 12304 **DATE** 12-16-04

PARTS DELETED FROM DATABASE _____ **ID#** _____ **DATE** _____

A COPY OF THIS FORM IS TO BE INCLUDED IN WITH THE TRAVELER

PARTS RECEIVED BY _____ **ID#** 4965 **DATE** 12/16/04

ADDITIONAL PARTS REQUEST

ADDITIONAL PARTS REQUEST FORM SHALL BE USED TO ACCESS ALL ITEMS FROM INVENTORY WITH THE EXCEPTION OF PARTS KITS.

THIS FORM MUST BE SIGNED BY AN ACQUISITIONER BEFORE BRINGING TO THE STOCKROOM

MAGNET OR COIL # *LMQXC-02*

DATE REQUESTED *1-12-05*

BUDGET CODE *300/1.1.1.3.4*

JOB TICKET # _____

MACHINE SHOP REQ. # _____

PURCHASE RELEASE # _____

REQUESTED BY *Damon Bice*

DELIVER TO *P/U*

NEED BY DATE *1-12-05*

MMR # _____

PO # _____

OTHER _____

PARTS STATUS (CHECK ONE)

☐ DEFECTIVE PARTS ISSUED ☐ PARTS SCRAPPED ☐ A/R ITEMS

☐ DEFECTIVE ASSEMBLY ☒ MISSING FROM KIT ALREADY ISSUED

☐ INDIVIDUAL PARTS ☐ CONSUMABLES ☐ PARTS LOST

ACQUISITIONER SIGNATURE [signature] ID# 4223 DATE 1/12/05

PLEASE INDICATE REVISION REQUIRED

Stock 16

LOCATION	PART #	REV	QTY	DESCRIPTION	RF #	SIR #
IB#4 BIN	*MB 430144*		*2*	*Harness Block*	*82152*	

STOCKROOM SIGNATURE [signature] ID# 1270 DATE 1-12-05

PARTS DELETED FROM DATABASE _____ ID# _____ DATE _____

A COPY OF THIS FORM IS TO BE INCLUDED IN WITH THE TRAVELER

PARTS RECEIVED BY [signature] ID# 17413 DATE 1-12-05

ADDITIONAL PARTS REQUEST

ADDITIONAL PARTS REQUEST FORM SHALL BE USED TO ACCESS ALL ITEMS FROM INVENTORY WITH THE EXCEPTION OF PARTS KITS.

THIS FORM MUST BE SIGNED BY AN ACQUISITIONER BEFORE BRINGING TO THE STOCKROOM

MAGNET OR COIL # *LQXC-02*

DATE REQUESTED *1-6-05*

BUDGET CODE *300/1.1.1.3.4*

JOB TICKET # _____

MACHINE SHOP REQ. # _____

PURCHASE RELEASE # _____

REQUESTED BY *Damon Bice*

DELIVER TO *P/U*

NEED BY DATE *1-6-05*

MMR # _____

PO # _____

OTHER _____

PARTS STATUS (CHECK ONE)

- ☐ DEFECTIVE PARTS ISSUED
- ☐ DEFECTIVE ASSEMBLY
- ☒ INDIVIDUAL PARTS
- ☐ PARTS SCRAPPED
- ☐ MISSING FROM KIT ALREADY ISSUED
- ☐ CONSUMABLES
- ☐ A/R ITEMS
- ☐ PARTS LOST

ACQUISITIONER SIGNATURE Marsha Schmidt **ID#** 4223 **DATE** 1/6/05

PLEASE INDICATE REVISION REQUIRED

LOCATION	PART #	REV	QTY	DESCRIPTION	RF #	SIR #
IB#4 BIN	MA 393018		2	M8 Bolt	78888	

STOCKROOM SIGNATURE _____ **ID#** 12698 **DATE** 1-6-05

PARTS DELETED FROM DATABASE _____ **ID#** _____ **DATE** _____

A COPY OF THIS FORM IS TO BE INCLUDED IN WITH THE TRAVELER

PARTS RECEIVED BY _____ **ID#** 13491 **DATE** 1/6/05

ADDITIONAL PARTS REQUEST

ADDITIONAL PARTS REQUEST FORM SHALL BE USED TO ACCESS ALL ITEMS FROM INVENTORY WITH THE EXCEPTION OF PARTS KITS.

THIS FORM MUST BE SIGNED BY AN ACQUISITIONER BEFORE BRINGING TO THE STOCKROOM

MAGNET OR COIL # *LMQXC-02*

REQUESTED BY *Damon Bice*

DATE REQUESTED *1-05-05*

DELIVER TO *ICB*

BUDGET CODE *300/1.1.1.3.4*

NEED BY DATE *1-05-05*

JOB TICKET # _____

MMR # _____

MACHINE SHOP REQ. # _____

PO # _____

PURCHASE RELEASE # _____

OTHER _____

PARTS STATUS (CHECK ONE)

☐ DEFECTIVE PARTS ISSUED ☐ PARTS SCRAPPED ☐ A/R ITEMS

☐ DEFECTIVE ASSEMBLY ☒ MISSING FROM KIT ALREADY ISSUED

☐ INDIVIDUAL PARTS ☐ CONSUMABLES ☐ PARTS LOST

ACQUISITIONER SIGNATURE Marsha Schmidt **ID#** 4223 **DATE** 1/5/05

PLEASE INDICATE REVISION REQUIRED

SFK
96

LOCATION	PART #	REV	QTY	DESCRIPTION	RF #	SIR #
IB#4 BIN	*MA 393175*		*2*	*FHSCS 8mm X 18mm*		

STOCKROOM SIGNATURE _____ **ID#** _____ **DATE** _____

PARTS DELETED FROM DATABASE _____ **ID#** _____ **DATE** _____

A COPY OF THIS FORM IS TO BE INCLUDED IN WITH THE TRAVELER

PARTS RECEIVED BY _____ **ID#** _____ **DATE** _____

CERN LHC MQXA

Acceptance Test at FNAL

QUALITY RECORD

Cryogenics Science Center

KEK, High Energy Accelerator Research Organization

Magnet ID :_____

Date of approval :_____

Approved by :_____ (FNAL)

:_____ (KEK)

Ver. 0
Ver A (with initial results)

1. Appearance Check

Procedure	Criteria
Check appearance of the magnet by visual inspection.	No harmful defects or deformation
Result at TOSHIBA	
Acceptable	
Result at FNAL	
Acceptable	

2. Interface Dimensions

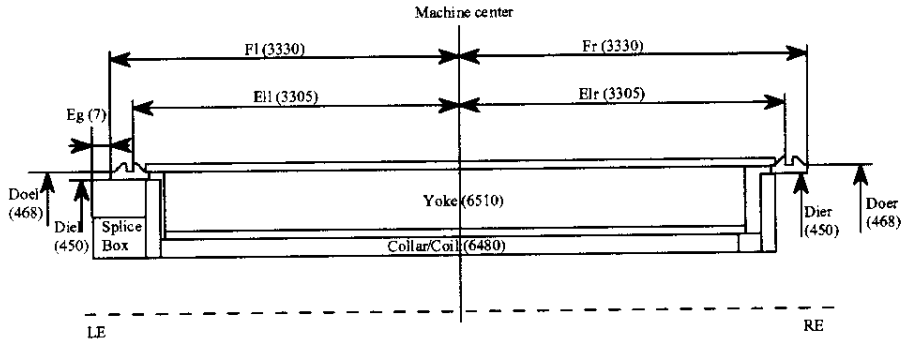

1) Dimensions	Unit:mm
Procedure	**Criteria**
1) Dimension Check Measure following dimensions a, b, c : Measuring range: every 45 deg. from 0 deg. d : Splice Box : four points	
a) Machine center - Interface	a) 3330 –6/+0
b) Interface outer diameter (Doel,Doer)	b) ϕ468 –4/+0
c) Interface inner diameter (Diel,Dier)	c) ϕ450 –4/+0
d) End Ring - Splice box(Eg)	d) 7 -5/+5

Result at TOSHIBA

Critera	3330 -6/+0		ϕ468 -4/+0		ϕ450 -4/+0		7
Position	Fl	Fr	Doel	Doer	Diel	Dier	Eg
0 deg.	3330.5	3329.5	468.07	468.05	450.34	450.33	6.36
45 deg.	3330.0	3329.5	467.19	467.04	449.19	449.33	
90 deg.	3330.0	3330.0	467.19	466.99	449.42	449.19	6.37
135 deg.	3329.5	3330.5	467.24	467.22	449.58	449.65	
180 deg.	3329.5	3330.0					5.64
225 deg.	3329.5	3330.5					
270 deg.	3330.0	3330.0					6.35
315 deg.	3330.0	3330.0					
Result	Acceptable		Acceptable		Acceptable		Acceptable

Result at FNAL

Critera	3330 -6/+0		ϕ468 -4/+0		ϕ450 -4/+0		7
Position	Fl	Fr	Doel	Doer	Diel	Dier	Eg
0 deg.	3330	3331			PASS		PASS
45 deg.							
90 deg.	3331	3330			PASS		PASS
135 deg.							
180 deg.							PASS
225 deg.							
270 deg.	3331	3331					PASS
315 deg.							
Result							

2) End ring interface		
Procedure		Criteria
Check the weld edge preparation using ϕ449 +0/-0.02 gauge.		1) The gauge shall be inserted into the end ring. 2) Measurement data will be reported if the gage cannot be inserted.
Measurement part	Result at TOSHIBA	Remarks
LE side	Acceptable	LE : 6mm
RE side	Acceptable	RE : 3mm
Measurement part	Result at FNAL	Remarks
LE side		
RE side		

3) Radial envelope	
Procedure	Criteria
Check shell radial envelope using ϕ530mm gauge. (dummy cold-mass support)	The gauge shall pass the magnet.
Result at TOSHIBA	
Acceptable	
Result at FNAL	

4) Magnet bore	
Procedure	Criteria
Check appearance of the magnet bore by visual inspection.	No harmful defects or deformation
Result at TOSHIBA	
Acceptable M.P.Lap was damaged at end section (LE side and RE side)	
Result at FNAL	

5) Magnet bus slot	
Procedure	Criteria
Check the bus slot using bus line model gauge.	The gauge shall pass the magnet bus slot.
Result at TOSHIBA	
Acceptable	
Result at FNAL	

6) Weight	
Procedure	Criteria
Measure the magnet weight.	Weight < 8500kg
Result at TOSHIBA	
8400 Kg	Acceptable
Result at FNAL	

7) Length of magnet lead, QPH wire, Voltage taps		
Procedure	Criteria	
Check the lengths of magnet lead, QPH wire, voltage taps.	1) Magnet lead : > 500mm from magnet LE end plate 2) Voltage taps wire : > 2000mm from magnet LE end plate 3) QPH wire : >2000mm from magnet LE end plate	
Result at TOSHIBA		
Measuring wire	Measured Value	Result
1) Magnet lead	> 500mm	Acceptable
2) Voltage taps	>2000mm	Acceptable
3) QPH wire	> 2000mm	Acceptable
Result at FNAL		
Measuring wire	Measured Value	Result
1) Magnet lead		
2) Voltage taps		
3) QPH wire		

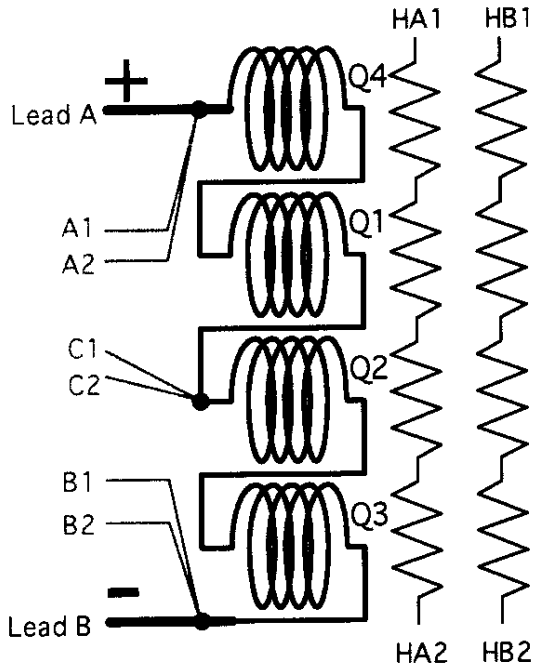

8) Cable tags	
Procedure	Criteria
Check the cable tags.	Consistent to the tag No. table.

Vtaps & QPH Tag No. table

Lead	Tag Name	Description
Voltage taps	A1, A2	Taps from A lead
	B1, B2	Taps from B lead
	C1, C2	Center taps
Quench heaters	HA1, HA2	Heater A
	HB1, HB2	Heater B

Result at TOSHIBA	
1)Voltage taps	Acceptable
2)Quench heaters	Acceptable
Result at FNAL	
1)Voltage taps	
2)Quench heaters	

3. Coil Resistance

Procedure	Criteria
Measure the magnet total resistance and coil temperature at coil current of DC1A. Calculate resistance at 20 °C; R_{20}. $R_{20}=V/I/(1+0.00393*(T_{coil}-20))$ V : Voltage between magnet leads (V) I : Coil current obtained by shut resistor (A) T_{coil} : coil temperature (°C)	1) Compare with R_{20} at TOSHIBA. Variation of R_{20} < 0.005 Ω 2) Voltage taps(C-A, C-B): Measurement Only

Result at TOSHIBA

T_{coil}	Not Reported

Magnet total voltage (V)	Current (A)	Magnet total resistance R_{20} (Ω)
Not Reported	Not Reported	6.79678

Voltage taps tag No.	V (V)	I (A)	R_{20} (Ω)	Voltage taps tag No.	V (V)	I (A)	R_{20} (Ω)
C1 - A1	Not Reported	Not Reported	3.39819	C2 - A1	Not Reported	Not Reported	3.39809
C1 - A2	Not Reported	Not Reported	3.39819	C2 - A2	Not Reported	Not Reported	3.39809
C1 - B1	Not Reported	Not Reported	3.39351	C2 - B1	Not Reported	Not Reported	3.39351
C1 - B2	Not Reported	Not Reported	3.39351	C2 - B2	Not Reported	Not Reported	3.39351

Acceptable

Result at FNAL

T_{coil}			
Magnet total voltage (V)	Current (A)	Magnet total resistance R_{20} (Ω)	Variation (Ω) ($R_{20\text{-TOSHIBA}}$ - $R_{20\text{-FNAL}}$)
Voltage taps tag No.	R_{20} (Ω)	Voltage taps tag No.	R_{20} (Ω)
C1 - A1	3.399	C2 - A1	3.4
C1 - A2	3.399	C2 - A2	3.4
C1 - B1	3.398	C2 - B1	3.399
C1 - B2	3.399	C2 - B2	3.399

4. Instrumentations

1) Voltage taps

Procedure	Criteria
Check resistance of all voltage taps by four terminal method at 1A. Magnet lead : Q4 4th : + Magnet lead : Q3 3rd : -	Magnet lead + : A1, A2 (Pole4 Out) Magnet lead - : B1, B2 (Pole3 Out) Center taps : C1, C2 (Pole1 Out) Variation of R_{20}(A1),R_{20}(A2) : < 0.1% Variation of R_{20}(B1),R_{20}(B2) : < 0.1% Variation of R_{20}(C1),R_{20}(C2) : < 0.1%

Result at TOSHIBA

Voltage taps No.	Resistance(Ω)	Voltage taps No.	Resistance(Ω)	Variation(%)	Result
A1	0.00269	A2	0.00269	0.00	Acceptable
C1	3.39945	C2	3.39945	0.00	Acceptable
B1	6.79164	B2	6.79164	0.00	Acceptable

Result at FNAL

Voltage taps No.	Resistance(Ω)	Voltage taps No.	Resistance(Ω)	Variation(%)	Result
A1	.002	A2	.002	Ø	Acc
C1	3.399	C2	3.399	Ø	Acc
B1	6.799	B2	6.799	Ø	Acc

2) QPH

Procedure	Criteria
Measure the resistance of QPH.	QPH resistance : 30 +4/-4Ω (HA,HB)

Result at TOSHIBA

QPH No.	QPH Resistance(Ω)	Result
HA	28.7	Acceptable
HB	28.7	Acceptable

Result at FNAL

QPH No.	QPH Resistance(Ω)	Result
HA	28.26	ACC
HB	28.35	ACC

5. Coil Inductance

Procedure	Criteria
Measure inductance of magnet at frequencies of 100Hz and 1kHz using LCR meter.	1) Variation of inductance Voltage taps No. C-A, inductance Voltage taps No. C-B : < 5% 2) Total inductance of the magnet :Measurement only

Result at TOSHIBA

Voltage taps tag No.	100Hz	Result (%)	1kHz	Result (%)	Voltage taps tag No.	100Hz	Result (%)	1kHz	Result (%)
C1 - A1	37.01	0.05	13.292	0.10	C2 - A1	37.01	0.05	13.292	0.10
C1 - A2	37.01		13.292		C2 - A2	37.01		13.292	
C1 - B1	37.03		13.305		C2 - B1	37.03		13.305	
C1 - B2	37.03		13.305		C2 - B2	37.03		13.305	

	100Hz	1kHz
Magnet	87.08	30.91

Acceptable

Result at FNAL

Voltage taps tag No.	100Hz	Result (%)	1kHz	Result (%)	Voltage taps tag No.	100Hz	Result (%)	1kHz	Result (%)
C1 - A1	37.049		13.370		C2 - A1	37.050		13.370	
C1 - A2	37.049		13.370		C2 - A2	37.050		13.370	
C1 - B1	37.073		13.376		C2 - B1	37.072		13.376	
C1 - B2	37.072		13.376		C2 - B2	37.072		13.376	

	100Hz	1kHz
Magnet		

6. Turn to Turn Insulation

Procedure	Criteria
Apply impulse voltage of 1000V between the magnet leads and record the signal. Instrumentation: Impulse generator, recorder	Compare the signal with one at KEK. Attach rthe chart.
Result at TOSHIBA	
Acceptable	See appendix
Result at FNAL	

7. Coil Insulation

1) Insulation Resistance			
Procedure		Criteria	
Apply 1kV-DC to the coil in 1 min. and measure insulation resistance by using insulation tester. High voltage : Coils□Ground : Collar, Yoke, Shell, QPH		Insulation resistance > 100MΩ	
Result at TOSHIBA			
Temperature(°C)	Humidity(%)	Insulation(MΩ)	Result
23	36	> 2000	Acceptable
Result at FNAL			
Temperature(°C)	Humidity(%)	Insulation(MΩ)	Result

2) Hi-pot test			
Procedure		Criteria	
Apply 3kV-DC to the coil in 1 min. and measure leak current or insulation resistance. High voltage : Coil Ground : Collar, Yoke, Shell, QPH		No break down Record leak current or resistance.	
Result at TOSHIBA			
Temperature (°C)	Humidity (%)	Leak current (mA)	Result
23	36	0.00	Acceptable
Result at FNAL			
Temperature (°C)	Humidity (%)	Leak current or resistance	Result

8. QPH Insulation

1) Insulation Resistance

Procedure	Criteria
Apply 1kV-DC to the QPH in 1 min. and measure insulation resistance by using insulation tester. High voltage : QPH Ground : Coil, Collar, Yoke, Shell	Insulation resistance > 100MΩ

Result at TOSHIBA

Heater No.	Temperature (°C)	Humidity (%)	Insulation(MΩ)	Result
HA	23	36	> 2000	Acceptable
HB			> 2000	Acceptable

Result at FNAL

Heater No.	Temperature (°C)	Humidity (%)	Insulation(MΩ)	Result
HA				
HB				

2) Hi-pot test

Procedure	Criteria
Apply 3kV-DC to the QPH in 1 min. and measure leak current or insulation resistance. High voltage : QPH Ground : Coil, Collar, Yoke, Shell	No break down Record leak current or resistance.

Result at TOSHIBA

Heater No.	Temperature (°C)	Humidity (%)	Leak current (mA)	Result
HA	23	36	0.00	Acceptable
HB			0.00	Acceptable

Result at FNAL

Heater No.	Temperature (°C)	Humidity (%)	Leak current or resistance	Result
HA				
HB				

9. QPH Discharge Test

1) Appearance check	
Procedure	Criteria
Check appearance of QPH wires by visual inspection.	No harmful defects or deformation.
Result at TOSHIBA	
Acceptable	
Result at FNAL	

2) QPH discharge test		
Procedure		Criteria
Charge the power supply above 850 V and fire QPHs.		No strange signal observed. Attach the chart.
Result at TOSHIBA		
HA	Acceptable	See appendix
HB	Acceptable	See appendix

3) QPH resistance				
Procedure			Criteria	
Measure resistance before/after the discharge test.			Resistance change < 10%	
Result at TOSHIBA				
QPH No.	Before (Ω)	After (Ω)	Variation (%)	Result
HA	28.7	28.7	0.0	Acceptable
HB	28.7	28.7	0.0	Acceptable
Result at FNAL				
QPH No.	Before (Ω)	After (Ω)	Variation (%)	Result
HA				
HB				

CERN
CH-1211 Geneva 23
Switzerland

the **Large Hadron Collider** project

AT MEL Document No.
LHC-MCBX-FR-0001 rev. **1.0**

EDMS Document No.

Certificate of Conformity

Part name:	MCBX Inner Triplet Dipole Corrector		
LHC Identification No.:	HCMCBX_001-SI000020	Serial No.:	HCMCBX_001-SI000020
Shipped To:	CERN	***Shipment No:***	***20***
		Shipment	***06/01/04***
Manufacturer:	SIGMAPHI	Contract No.:	F375/LHC/LHC
Related tech. Specification:	LHC-MCBX-CI-0001 and addenda		
Related drawings:	LHCMCBX_0012 (1525-CN-1001)		
Responsible person at CERN:	Mikko Karppinen	***Tel.***	+41 22 767 4305
		E-mail.	Mikko.Karppinen@cern.ch
Responsible person at SIGMAPHI:	Damien Neuvéglise	***Tel.***	+33 2 97 01 08 80
		E-mail.	dneuveglise@sigmaphi.fr
SIGMAPHI certifies that the delivered material conforms to the technical specification mentioned above:			
Date: 06/01/04	***Name: D.Neuvéglise***		***Signature: D.Neuvéglise***

Acceptance test results

		MCBXV (Inner)	***MCBXH (Outer)***	***Remarks:***
RT dc resistance (Ω):	***SIGMAPHI:***	***17.7***	***21.4***	
	CERN:	***17.52***	***21.5***	
	CMA[1]:	17.4	21.4	
Inductance @1 kHz/100 Hz (mH)	***SIGMAPHI:***	***66.33 / 112.48***	***68.33 / 160.46***	
	CERN	***34.76 / 72.06***	***45.69 / 88.04***	
	CMA:	34.72 / 72.03	45.67 / 88.01	
R.T. leakage current to ground @ 1.5 kV (μA):	***SIGMAPHI:***	***0.0075***	***0.01***	
	CERN:	***0.017***	***0.068***	
	CMA:			

	Cold Mass Assembler
Visual inspection	ACCEPTABLE
Name / Signature	[illegible]
Date	12-3-04

Accepted: ☒

Rejected: ☐

[1] Cold Mass Assembler

Comments (SigmaPhi):	

Comments (CERN):	***The magnetic axis of this assembly has been measured at warm.***
	The scribe line is made relative to the dowel pin holes on the connection plate.
	During the combined powering field was rotated 0-360 deg at 95 % of the nominal current @ 1.9 K.
	During the indivual powering the MCBXV and MCBXH reached 700 A.

Comments (CMA):	

CERN
CH-1211 Geneva 23
Switzerland

the **Large Hadron Collider** project

AT MEL Document No.
LHC-MCSTX-FR-0001 rev. **1.0**
EDMS Document No.

Certificate of Conformity

Part name:	MCSTX Inner Triplet Sextupole Dodecapole Insert		
LHC Identification No.:	HCMCSTX001-CE000003	***Serial No.:***	HCMCSTX001-CE000003
Shipped To:	FNAL	***In MCBX assembly:***	HCMCBX_001-SI000020
		Shipment No:	***02***
Manufacturer:	CERN	***Shipment Date:***	***3/6/03***
Related tech. Specification:	LHC-MCSTX-CI-0001 (in preparation)		
Related drawings:	LHCMCSTX0001		
Responsible person at CERN:	Mikko Karppinen	***Tel.***	+41 22 767 4305
		E-mail.	Mikko.Karppinen@cern.ch
CERN certifies that the delivered material conforms to the technical specification mentioned above:			
Date: 22/10/03	***Name: M. Karppinen***		***Signature:*** Mikko Karppinen

Acceptance test results

		MCSX	***MCTX***	***Remarks:***
RT dc resistance (Ω):	***CERN:***	***27.95***	***98.75***	
	CMA[1]:	27.8	98.6	
Inductance @1 kHz/100 Hz (mH)	***CERN***	***2.25 / 4.77***	***24.15 / 31.31*** 24.15/31.31	
	CMA:	2.25/4.77		
R.T. leakage current to ground @ 1.5 kV (μA):	***CERN:***	***0.005***	***0.003***	
	CMA:			

	Cold Mass Assembler
Visual inspection	ACCEPTABLE
Name / Signature	[illegible]
Date	12.3.04

Accepted: ☒

Rejected: ☐

[1] Cold Mass Assembler

Comments (CERN):	***Magnetic axis have not been measured at warm.***
	MCSX and MCTX were powered at 100 A in the rotating dipole field (80 % of nominal) and at nominal dipole field in 8 directions (0, 45, 90, 135, 180, 225, 270, 315 deg).

Comments (CMA):	

CERN
CH-1211 Geneva 23
Switzerland

the **Large Hadron Collider** project

AT MEL Document No.
LHC-MQSX-FR-0001 rev. **1.0**

EDMS Document No.

Certificate of Conformity

Part name:	MQSX Inner Triplet Skew Quadrupole Corrector		
LHC Identification No.:	HCMQSX_001-AN000002	Serial No.:	**HCMQSX_001-AN000002**
Shipped To:	CERN	***Shipment No:***	***01***
		Shipment	***30/05/03***
Manufacturer:	Ansaldo	***Order No.:***	CD1000630
Related tech. Specification:	LHC-MQSXA-CI-0001 and addenda		
Related drawings:	LHCMQSXA0020 (620RM9829)		
Responsible person at CERN:	Mikko Karppinen	***Tel.***	+41 22 767 4305
		E-mail.	Mikko.Karppinen@cern.ch
Responsible person at Ansaldo:	Gianluigi Gaggero	***Tel.***	+39 010 6489 210
		E-mail.	gaggero.gianluigi@as-g.it
Ansaldo certifies that the delivered material conforms to the technical specification mentioned above:			
Date: 29/05/03	***Name: G. Gaggero***		***Signature:*** *Gianluigi Gaggero*

Acceptance test results

		MQSX	Remarks:
RT dc resistance (Ω):	***Ansaldo:***	***7.78***	
	CERN:	***7.51***	
	CMA[1]:	7.5	
Inductance @1 kHz/100 Hz (mH)	***Ansaldo:***	***14.34 / 14.20***	
	CERN	***14.20 / 14.21***	
	CMA:	14.2 / 14.21	
R.T. leakage current to ground @ 1.5 kV (μA):	***Ansaldo:***	***0.36***	
	CERN:	***0.051***	
	CMA:		

	Cold Mass Assembler
Visual inspection	ACCEPTABLE
Name / Signature	Tom B
Date	12-3-09

Accepted: ☒

Rejected: ☐

[1] Cold Mass Assembler

Comments (Ansaldo):	

Comments (CERN):	***Magnetic axis have not been measured at warm.***
	Scribe line made relative to the dowel pin holes on the conn. plate.

Comments (CMA):	

CERN
CH-1211 Geneva 23
Switzerland

the **Large Hadron Collider** project

AT MEL Document No.
LHC-MCSOX-FR-0001 rev. **1.0**

EDMS Document No.

Certificate of Conformity

Part name:	MCSOX Inner Triplet Corrector Package		
LHC Identification No.:	HCMCSOX001-AN000002	Serial No.:	**HCMCSOX001-AN000002**
Shipped To:	CERN	***Shipment No:***	***01***
		Shipment	***30/05/03***
Manufacturer:	Ansaldo	***Order No.:***	CD1000630
Related tech. Specification:	LHC-MQSXA-CI-0001 and addenda		
Related drawings:	LHCMQSXA0020 (620RM9829)		
Responsible person at CERN:	Mikko Karppinen	***Tel.***	+41 22 767 4305
		E-mail.	Mikko.Karppinen@cern.ch
Responsible person at Ansaldo:	Gianluigi Gaggero	***Tel.***	+39 010 6489 210
		E-mail.	gaggero.gianluigi@as-g.it
Ansaldo certifies that the delivered material conforms to the technical specification mentioned above:			
Date: 29/05/03	***Name: G. Gaggero***		***Signature:*** *Gianluigi Gaggero*

Acceptance test results

		MCOSX	MCOX	MCSSX	Remarks:
RT dc resistance (Ω):	***Ansaldo:***	***12.19***	***13.22***	***13.79***	
	CERN:	***11.85***	***12.85***	***13.42***	
	CMA[1]:	11.64	12.81	13.28	VALHALLA 32-858 (a) 10mA
Inductance @1 kHz/100 Hz (mH)	***Ansaldo:***	***3.31*** ***3.31***	***4.50*** ***4.49***	***7.84*** ***7.83***	
	CERN	***3.31*** ***3.31***	***4.50*** ***4.50***	***7.83*** ***7.84***	
	CMA:	3.295	4.486	7.851	4263B
R.T. leakage current to ground @ 1.5 kV (μA):	***Ansaldo:***	***0.26***	***0.31***	***0.33***	
	CERN:	***0.076***	***0.060***	***0.068***	
	CMA:				

	Cold Mass Assembler
Visual inspection	ACCEPTABLE
Name / Signature	[illegible]
Date	12-3-09

Accepted: ☒

Rejected: ☐

Comments (Ansaldo):	

Comments (CERN):	***Magnetic axis have not been measured at warm.***
	Scribe line made relative to the dowel pin holes on the conn. plate.

Comments (CMA):	

FORM #1 FIXED VOLTAGE TAPS _1A_FORM

Test of Q3 FVTs

Apply 1 A current between BUS #1 & BUS #2 on the feed end (see diagram to right)
1. Clamp bus #1 to bus #2 on return end
2. Connect Current Source: BUS #1 to Positive and BUS #2 to Negative
Use a 3457 or equilivent DVM and record measurement to 4 decimal places
Use 2 wires Voltage Measurements Technique:
1. Connect DVM LO wire to BUS#2 (or Negative output of Power source)
2. HI wire of DVM will move through wires to measure V
DO NOT USE DC CURRENT LARGER THAN 2A.
DO NOT APPLY CURRENT THROUGH MAGNET LONGER THAN 30MIN.

BUS #1
BUS #2
BUS #3
BUS #4

POWER BUS LOCATION
RETURN END

BUS #1	BUS #2
BUS #3	BUS #4

POWER BUS LOCATION
FEED END

HYPERTRONIC CONNECTOR		FNAL Labels	Description	Wire Labels	Expected Voltage, V	Measured (V)
Module	Pin					
M5	2	VTa1Q3	Q3 Lead Voltage Tap "a", primary	EE1113	7.0000	6.857
M5	1	VTa2Q3	Q3 Lead Voltage Tap "a", redundant	EE1123	7.0000	6.856
M6	3	VTb1Q3	Q3 lead Voltage Tap "b", primary	EE1313	0.0030	0.0112
M6	4	VTb2Q3	Q3 Lead Voltage Tap "b" redundant	EE1323	0.0030	0.0113
M6	1	VTc1Q3	Q3 Center Voltage Tap "c", primary	EE1213	3.5000	3.4307
M6	2	VTc2Q3	Q3 Center Voltage Tap "c", redundant	EE1223	3.5000	3.4307

Across BUS #1 and BUS #2	6.861 V

L MQXC02

Form #2 CRYO HEATER CHECK_OUT

MEASURE RESISTANCE ACROSS EACH HEATER USING HANDHELD METER
MEASURE RESISTANCE FROM HEATER TO GND USING HANDHELD METER

Module	Pin		*Expected Resistance, OHM*	*Measured Resistance, OHM*	FNAL Label	Description
M15	*1*	**EH8313+**	**17**	**18.03**	W1aQ3	*Q3 Cryogenic Heater lead end - wire toward cold mass end plate (CERN #1 I+)*
M15	*2*	**EH8313-**			W2aQ3	*Q3 Cryogenic Heater lead end - wire toward cold mass mag center (CERN #1 I-)*
M15	*3*	**EH8323+**	**17**	**17.75**	W1bQ3	*Q3 Cryogenic Heater non-lead end- wire toward cold mass end plate (CERN #2 I+)*
M15	*4*	**EH8323-**			W2bQ3	*Q3 Cryogenic Heater non-lead end- wire toward cold mass mag center (CERN #2 I-)*

M15	*1*	**EH8313+**	**more than 20MOHM**	**Inf**	W1aQ3	*Q3 Cryogenic Heater lead end - wire toward cold mass end plate (CERN #1 I+)*
		GND				
M15	*3*	**EH8323+**	**more than 20MOHM**	**Inf**	W1bQ3	*Q3 Cryogenic Heater non-lead end- wire toward cold mass end plate (CERN #2 I+)*
		GND				

LMQXC02

Form #3 PROTECTION STRIP HEATERS

MEASURE RESISTANCE ACROSS EACH HEATER USING HANDHELD METER
MEASURE RESISTANCE FROM HEATER TO GND USING HANDHELD METER
MEASURE RESISTANCE FROM HEATER TO COIL USING HANDHELD METER

M22	*4*	**YT1113-**	**30**	**30.42**	*H2aQ1*	*Q1 Protection (Strip) Heater, 1-4 & 2-3 circuit (FNAL lead A-) (CERN lead #1-)*
M21	*5*	**YT1113+**			*H1aQ1*	*Q1 Protection (Strip) Heater, 1-4 & 2-3 circuit (FNAL lead A+) (CERN lead #1+)*
M22	*2*	**YT1123+**	**30**	**30.53**	*H1bQ3*	*Q3 Protection (Strip) Heater, 1-2 & 3-4 circuit (FNAL lead B+) (CERN lead#2+)*
M23	*1*	**YT1123-**			*H2bQ3*	*Q3 Protection (Strip) Heater, 1-2 & 3-4 circuit (FNAL lead B-) (CERN lead #2-)*
M22	*4*	**YT1113-**	**more than 20MOHM**	**INF**	*H2aQ3*	*Q3 Protection (Strip) Heater, 1-4 & 2-3 circuit (FNAL lead A-) (CERN lead #1-)*
		GND				
M22	*2*	**YT1123+**	**more than 20MOHM**	**INF**	*H1bQ3*	*Q3 Protection (Strip) Heater, 1-2 & 3-4 circuit (FNAL lead B+) (CERN lead#2+)*
		GND				
M22	*4*	**YT1113-**	**more than 20MOHM**	**INF**	*H2aQ3*	*Q3 Protection (Strip) Heater, 1-4 & 2-3 circuit (FNAL lead A-) (CERN lead #1-)*
		COIL				
M22	*2*	**YT1123+**	**more than 20MOHM**	**INF**	*H1bQ3*	*Q3 Protection (Strip) Heater, 1-2 & 3-4 circuit (FNAL lead B+) (CERN lead#2+)*
		COIL				

LMQXCØ2

Form#4 RTDs Measurements

MEASURE RESISTANCE ACROSS EACH RTD USING A FOUR WIRE METER
MEASURE RESISTANCE FROM RTD TO GROUND USING HANDHELD METER
MEASURE RESISTANCE FROM RTD TO THE COIL USING HANDHELD METER

Module	Pin	Breakout BOX Labels	Expected Resistance, OHM	Measured Resistance OHM	FNAL Label	Description
M26	9	TT8313 I+	57	68.13	TaQ3_I+	Q3 RTD, primary Wire color: Yellow
M26	8	TT8313 I-			TaQ3_I-	Q3 RTD, primary Wire color: Green
M26	7	TT8313 U+			TaQ3_V+	Q3 RTD, primary Wire color: Black
M26	12	TT8313 U-			TaQ3_V-	Q3 RTD, primary Wire color: Red
M26	13	TT8323 I+	57	66.98	TbQ3_I+	Q3 RTD, redundant: Wire color: Yellow
M26	14	TT8323 I-			TbQ3_I-	Q3 RTD, redundant: Wire color: Green
M26	15	TT8323 U+			TbQ3_V+	Q3 RTD, redundant: Wire color: Black
M26	16	TT8323 U-			TbQ3_V-	Q3 RTD, redundant: Wire color: Red
M26	9	TT8313 I+ GND	more than 20MOHM	INF	TaQ3_I+	Q3 RTD, primary Wire color: Yellow
M26	9	TT8323 I+ GND	more than 20MOHM	INF	TbQ3_I+	Q3 RTD, redundant: Wire color: Yellow
M26	9	TT8313 I+ COIL	more than 20MOHM	INF	TaQ3_I+	Q3 RTD, primary Wire color: Yellow
M26	9	TT8323 I+ COIL	more than 20MOHM	INF	TbQ3_I+	Q3 RTD, redundant: Wire color: Yellow

LMQXC02

Ccoil bus #	NA	3	4	1	2	7	8	5	6	NA
	XXX	V3A	V3B	H3A	H3B	B3A	B3B	B6A	B6B	XXX
	XXX	V2A	V2B	H2A	H2B	B4A	B4B	A4A	A4B	XXX
	XXX	V1A	V1B	H1A	H1B	A2A	A2B	A3A	A3B	XXX

Form#5 Correction COILs for Q3 magnet

MEASURE RESISTANCE ACROSS BOTH CCOIL BUSES
MEASURE RESISTANCE FROM CCOIL TO GROUND
MEASURE RESISTANCE BETWEEN TAPS
MEASURE RESISTANCE FROM EACH TAP TO CCOIL BUS
MEASURE CONTINUITY OF Q1 CCOIL BUS
MEASURE FOR SHORT BETWEEN Q1 CCOIL BUS AND GRD
MEASURE CONTINUITY OF Q2 CCOIL BUS
MEASURE FOR SHORT BETWEEN Q2 CCOIL BUS AND GRD

Horizontal Corrector Coil		Expected	Measured
H3-A	CCOIL BUS #1	*23 OHMS*	21.74OHMS
H3-B	CCOIL BUS #2		
Vertical Corrector Coil			
V3-A	CCOIL BUS #3	19 OHMS	17.75 OHMS
V3-B	CCOIL BUS #4		
A2 Corrector Coil			
A2-A	CCOIL BUS #7	10 OHMS	7.89 OHMS
A2-B	CCOIL BUS #8		
H3-A	CCOIL BUS #1	>20 KOHMS	INF
	GND		
V3-A	CCOIL BUS #3	>20 KOHMS	INF
	GND		
A2-A	CCOIL BUS #7	>20 KOHMS	INF
	GND		

LMQXC02

A3 Corrector Coil resistance

A3-A	CCOIL BUS #5	14 OHMS	13.69 OHMS
A3-B	CCOIL BUS #6		

B3 Corrector Coil resistance

B3-A	CCOIL BUS #7	28 OHMS	28.23 OHMS
B3-B	CCOIL BUS #8		

A4 Corrector Coil resistance

A4-A	CCOIL BUS #5	12 OHMS	12.15 OHMS
A4-B	CCOIL BUS #6		

A3-A	CCOIL BUS #1	>20K OHMS	INF
	GND		

B3-A	CCOIL BUS #3	>20K OHMS	INF
	GND		

A4-A	CCOIL BUS #7	>20K OHMS	INF
	GND		

B4 Corrector Coil resistance

B4-A	CCOIL BUS #7	13 OHMS	13.20 OHMS
B4-B	CCOIL BUS #8		

B6 Corrector Coil resistance

B6-A	CCOIL BUS #5	100 OHMS	99.12 OHMS
B6-B	CCOIL BUS #6		

B4-A	CCOIL BUS #1	>20K OHMS	INF
	GND		
B6-A	CCOIL BUS #3	>20K OHMS	INF
	GND		

LMQXC02

	Expected	Measured		Expected	Measured
EE8123	>20M OHMS	INF	**EE8123**	>20M OHMS	INF
EE8113			**EE8413**		
EE8123	>20M OHMS	INF	**EE8123**	>20M OHMS	INF
EE8223			**EE8613**		
EE8123	>20M OHMS	INF	**EE8113**	>20M OHMS	INF
EE8323			**EE8223**		
EE8123	>20M OHMS	INF	**EE8113**	>20M OHMS	INF
EE8313			**EE8323**		
EE8123	>20M OHMS	INF	**EE8113**	>20M OHMS	INF
EE8423			**EE8313**		

	Expected	Measured		Expected	Measured
EE8113	>20M OHMS	INF	**EE8223**	>20M OHMS	INF
EE8423			**EE8613**		
EE8113	>20M OHMS	INF	**EE8323**	>20M OHMS	INF
EE8413			**EE8313**		
EE8113	>20M OHMS	INF	**EE8323**	>20M OHMS	INF
EE8613			**EE8423**		
EE8223	>20M OHMS	INF	**EE8323**	>20M OHMS	INF
EE8323			**EE8413**		
EE8223	>20M OHMS	INF	**EE8323**	>20M OHMS	INF
EE8313			**EE8613**		
EE8223	>20M OHMS	INF	**EE8313**	>20M OHMS	INF
EE8423			**EE8423**		

LMQXC02

EE8223	>20M OHMS	INF
EE8413		
EE8313	>20M OHMS	INF
EE8613		
EE8423	>20M OHMS	INF
EE8413		

EE8313	>20M OHMS	INF
EE8413		
EE8423	>20M OHMS	INF
EE8613		
EE8413	>20M OHMS	INF
EE8613		

Measure Vtap to each Ccoil

	Expected	Measured
H3A	<5 OHMS	1.15 OHMS
EE8123		
V3A	<5 OHMS	1.24 OHMS
EE8113		
B6A	<5 OHMS	1.13 OHMS
EE8613		
B3A	<5 OHMS	1.12 OHMS
EE8313		
A4A	<5 OHMS	1.11 OHMS
EE8423		
B4A	<5 OHMS	1.12 OHMS
EE8413		
A3A	<5 OHMS	1.11 OHMS
EE8323		
A2A	<5 OHMS	2.9 OHMS
EE8223		

	Expected	Measured
H3B	24 OHMS	22.67 OHMS
EE8123		
V3B	19 OHMS	18.71 OHMS
EE8113		
B6B	100 OHMS	100.07 OHMS
EE8613		
B3B	29 OHMS	29.11 OHMS
EE8313		
A4B	12 OHMS	13.04 OHMS
EE8423		
B4B	13 OHMS	14.04 OHMS
EE8413		
A3B	13 OHMS	14.62 OHMS
EE8323		
A2B	10 OHMS	9.58 OHMS
EE8223		

LMQXC02

Measure continuity of Q1 Ccoil through bus

Ccoil	Bus	(X) IF OK
V1A	3	X
V1B	4	X
H1A	1	X
H1B	2	X

Measure Ccoil through bus of Q1 to GND

Ccoil	Bus	(X) IF OK
V1A	3	X
V1B	4	X
H1A	1	X
H1B	2	X

Measure continuity of Q2 Ccoil through bus

Ccoil	Bus	(X) IF OK
V2A	3	X
V2B	4	X
H2A	1	X
H2B	2	X

Measure Ccoil through bus of Q2 to GND

Ccoil	Bus	(X) IF OK
V2A	3	X
V2B	4	X
H2A	1	X
H2B	2	X

LMQXC02

Form#6 Feed through Test

MEASURE RESISTANCE BETWEEN ALL 24-Q1 FEED THROUGH SIGNALS
MEASURE RESISTANCE BETWEEN ALL 46-Q2 FEED THROUGH SIGNALS

Q1	EXPECTED RESISTANCE	(X) IF OK	Q2	EXPECTED RESISTANCE	(X) IF OK
EE1111	< 1 OHM	X	EE1112	< 1 OHM	X
EE1121	< 1 OHM	X	EE1122	< 1 OHM	X
EE1211	< 1 OHM	X	EE1212	< 1 OHM	X
EE1221	< 1 OHM	X	EE1222	< 1 OHM	X
EE1311	< 1 OHM	X	EE1312	< 1 OHM	X
EE1321	< 1 OHM	X	EE1322	< 1 OHM	X
EE8121	< 1 OHM	X	EE8122	< 1 OHM	X
EE8111	< 1 OHM	X	EE8112	< 1 OHM	X
EH8311+	< 1 OHM	X	EH8312+	< 1 OHM	X
EH8311-	< 1 OHM	X	EH8312-	< 1 OHM	X
EH8321+	< 1 OHM	X	EH8322+	< 1 OHM	X
EH8321-	< 1 OHM	X	EH8322-	< 1 OHM	X
YT1111+	< 1 OHM	X	YT1112+	< 1 OHM	X
YT1111-	< 1 OHM	X	YT1112-	< 1 OHM	X
YT1121+	< 1 OHM	X	YT1122+	< 1 OHM	X
YT1121-	< 1 OHM	X	YT1122-	< 1 OHM	X
TT8311I+	< 1 OHM	X	TT8312I+	< 1 OHM	X
TT8311I-	< 1 OHM	X	TT8312I-	< 1 OHM	X
TT8311U+	< 1 OHM	X	TT8312U+	< 1 OHM	X
TT8311U-	< 1 OHM	X	TT8312U-	< 1 OHM	X
TT8321I+	< 1 OHM	X	TT8322I+	< 1 OHM	X
TT8321I-	< 1 OHM	X	TT8322I-	< 1 OHM	X
TT8321U+	< 1 OHM	X	TT8322U+	< 1 OHM	X
TT8321U-	< 1 OHM	X	TT8322U-	< 1 OHM	X
			EE1412	< 1 OHM	X
			EE1422	< 1 OHM	X
			EE1512	< 1 OHM	X
			EE1522	< 1 OHM	X
			EE1612	< 1 OHM	X
			EE1622	< 1 OHM	X
			EH8332+	< 1 OHM	X
			EH8332-	< 1 OHM	X
			EH8342+	< 1 OHM	X
			EH8342-	< 1 OHM	X
			YT1132+	< 1 OHM	X
			YT1132-	< 1 OHM	X
			YT1142+	< 1 OHM	X
			YT1142-	< 1 OHM	X
			TT8332I+	< 1 OHM	X
			TT8332I-	< 1 OHM	X
			TT8332U+	< 1 OHM	X
			TT8332U-	< 1 OHM	X
			TT8342I+	< 1 OHM	X
			TT8342I-	< 1 OHM	X
			TT8342U+	< 1 OHM	X
			TT8342U-	< 1 OHM	X

LMQXC02

Revision Request Control Number: 1695

Specification Number: 5520 - TR - 333729 Current Revision: A

Traveler or Document Title LHC Q3 LMQXC Module Assembly Traveler

Step #/Description of Revision:

1.6 Added Step. "Protect the bellows during all stages of production." DR No. HGQ-0500.
7.6 Removed Step. Moved to after electrical. New step 7.8.
7.0-17.0 Modified order of steps per production request. (Subsequent changes to steps will reflect new Step Numbers)
7.14 New step. "Splice Cold mass voltage taps to wire bundle. Verify splices electrically." Per LMQXC02.
7.15 New step. "Attach wires using putty and install the Voltage Tap Splice Cover Block (MC-430146)." Per LMQXC02.
9.5 Added Step. "Solder Corrector Wires per Q3 Module Assembly(ME-369900) and as shown in Figure 9.4-A."
9.6 Added Step. "Install voltage taps on MCBXA corrector leads. One tap is to be soldered to the "A" Lead of each corrector element. Wire labels are shown below."
11.12 Modified Step. Added check boxes and specifications for measurements taken with Mini-level.
12.1 Modified Step. Added picture, (ME-369900 - Rev. A, Sheet 3 of 5), per production request.
12.11 Added Step. "Solder MQSX Corrector Wires."
12.13 New Step. "At the IP End, attach Spider Assembly (MD-430072) as per Q3 Module Assembly (ME-369900)."
15.3 New Step. "At the Non-IP End, attach Spider Assembly (MB-430096) as per Q3 Module Assembly (ME-369900)." Per DR No. HGQ-0520.
16.2 Modified Step. Added "Record Initial resistance of Corrector Element and record below." Added column to record initial resistance of Corrector Element.
16.3 Added Step. "Attach Backing Splines as per Q3 Module Assembly (ME-369900)."
16.4 Added Step. "At the IP End (Lead End) wrap the Springboard Assemblies in Kapton and then wrap with Kevlar String (MA-369912) every ½ - ¾" over Kapton as per Q3 Module Assembly (ME-369900)."
16.5 Added Step. "At the Non-IP End (Non-Lead End) wrap the Springboard Assemblies in Kapton and then wrap with Kevlar String (MA-369912) every ½ - ¾" over Kapton as per Q3 Module Assembly (ME-369900)."
17.3 Modified Step. Moved Step per production request. "Position the Beam Tube (MC-369522) longitudinally per Q3 Cold Mass Welded Assembly (ME-390529)." New Step 20.1
19.2 Modified Step. Changed to "Insert the Fixed Support Assembly(ME-390041) into the Vacuum Vessel and position at the IP End."
19.5 Modified Step. Changed to "Insert the Sliding Support Assembly(ME-390042) in to the Vacuum Vessel and position at the Non-IP End."

John Szostak	Jim Rife	1/3/2005
Originator	Responsible Authority	Date
Revision Incorporated into the Traveler:	John Szostak	3/8/2005
	Revision Incorporated By	Date
Process Engineering Final Review:	Jamie Blowers	3/8/2005
	Process Engineering/Designee	Date

Instructions for the completion of the Revision Request Form

Note(s):

Multiple steps may be effected by one Revision Request Form but only one specific Traveler or Document may be effected by each Revision Request Form.

If completing this form by hand, a Revision Request Control Number must be obtained before processing.

If completing this form entirely by electronic means, the printed copy to be filed in the Process Engineering Office is to be initialed by the individual incorporating the Revision Request and the individual who reviewed the Traveler or Document.

Originator Instructions:

1) Specification Number: - Enter the Specification Number of the Traveler or Document to be revised. (Document title is inserted automatically from the spec. #)

2) Current Revision: - Enter the Revision of the Traveler or Document to be revised.

3) Step# / Description of the Revision: - Enter a description of the revision to be made and the step# it applies to, if applicable. If needed to describe the revision attach a copy of the page(s). If the revision is coming from a related document such as a Discrepancy Report or an Engineering Order attach a copy of that document to the Revision Request Form.

4) Originator: - Originator is the person generating the form. (Select Name from List)

5) Responsible Authority: - Responsible Authority is person responsible for the process in question. (Select Name from List)

Process Engineering Office Instructions:

1) Revision Incorporated into the Traveler: - Signature of the individual who incorporated the revision.

2) Process Engineering Final Review: - Review the Traveler or Document revised, sign and date the form. The original completed Revision Request Form will be retained by the Process Engineering Office in the Revision Request Binder.

1.0 Check Q1 & Q2 Instrumentation Bus Wires for Continuity.

Module	Pin	Fermi	CERN	KEK	Description	Done
M2	1	VTa1Q1	EE1111	a1	Q1 Lead Voltage Tap "a" , primary	✓
M2	2	VTa2Q1	EE1121	a2	Q1 Lead Voltage Tap "a", redundant	✓
M2	3	VTc1Q1	EE1211	c1	Q1 Center Voltage Tap "c", primary	✓
M2	4	VTc2Q1	EE1221	c2	Q1 Center Voltage Tap "c", redundant	✓
M2	5	VTb1Q1	EE1311	b1	Q1 Lead Voltage Tap "b", primary	✓
M3	1	VTc1Q2a	EE1212		Q2a Center Voltage Tap "c", primary	✓
M3	3	VTa2Q2a	EE1122		Q2a lead Voltage Tap "a", redundant	✓
M3	4	VTa1Q2a	EE1112		Q2a Lead Voltage Tap "a", primary	✓
M3	5	VTb2Q1	EE1321	b2	Q1 Lead Voltage Tap "b", redundant	✓
M4	1	VTc2Q2a	EE1222		Q2a Center Voltage Tap "c", redundant	✓
M4	3	VTb1Q2a	EE1312		Q2a Lead Voltage Tap "b", primary	✓
M4	4	VTb2Q2a	EE1322		Q2a Lead Voltage Tap "b", redundant	✓
M4	5	VTb1Q2b	EE1612		Q2b lead Voltage Tap "b", primary	✓
M5	2	VTc2Q2b	EE1522		Q2b Center Voltage Tap "c", redundant	✓
M5	3	VTc1Q2b	EE1512		Q2b Center Voltage Tap "c", primary	✓
M5	5	VTb2Q2b	EE1622		Q2b Lead Voltage Tap "b" redundant	✓
M6	1	VTa1Q2b	EE1412		Q2b Lead Voltage Tap "a", primary	✓
M6	2	VTa2Q2b	EE1422		Q2b Lead Voltage Tap "a", redundant	✓
M8	1	VTH1	EE8121		Corrector voltage tap Q1-H1 (skew dipole) (on MCBX, MCBXH, A+ lead)	✓
M8	2	VTV1	EE8111		Corrector voltage tap Q1-V1 (normal dipole) (on MCBX, MCBXV A+ lead)	✓
M8	3	VTH2	EE8122		Corrector voltage tap Q2-H2 (skew dipole) (on MCBX, MCBXH, A+ lead)	✓
M8	4	VTV2	EE8112		Corrector voltage tap Q2-V2 (normal dipole) (on MCBX, MCBXV, A+ lead)	✓
M10	1	W1aQ1	EH8311+		Q1 Cryogenic Heater lead end - wire at top (CERN #1 I+)	✓
M10	2	W2aQ1	EH8311-		Q1 Cryogenic Heater lead end - wire at bottom (CERN #1 I-)	✓
M10	3	W1bQ1	EH8321+		Q1 Cryogenic Heater non-lead end - wire at top (CERN #2 I+)	✓
M10	4	W2bQ1	EH8321-		Q1 Cryogenic Heater non-lead end - wire at bottom (CERN #2 I-)	✓
M11	1	W1aQ2A	EH8312+		Q2A Cryogenic Heater lead end - wire toward cold mass end plate (CERN #1 I+)	✓
M11	2	W2aQ2A	EH8312-		Q2A Cryogenic Heater lead end - wire toward cold mass mag center (CERN #1 I-)	✓
M11	3	W1bQ2A	EH8322+		Q2A Cryogenic Heater non-lead end- wire toward cold mass end plate (CERN #2 I+)	✓

Module	Pin	Fermi	CERN	KEK	Description	Done
M11	4	W2bQ2A	EH8322-		Q2A Cryogenic Heater non-lead end- wire toward cold mass mag center (CERN #2 I-)	✓
M12	1	W1aQ2B	EH8332+		Q2B Cryogenic Heater lead end - wire toward cold mass end plate (CERN #1 I+)	✓
M12	2	W2aQ2B	EH8332-		Q2B Cryogenic Heater lead end - wire toward cold mass mag center (CERN #1 I-)	✓
M12	3	W1bQ2B	EH8342+		Q2B Cryogenic Heater non-lead end- wire toward cold mass end plate (CERN #2 I+)	✓
M12	4	W2bQ2B	EH8342-		Q2B Cryogenic Heater non-lead end- wire toward cold mass mag center (CERN #2 I-)	✓
M14	1	H1aQ1	YT1111+	HA1	Q1 Protection (Strip) Heater, ("a" circuit) (CERN lead #1+)	✓
M14	3	H2aQ1	YT1111-	HA2	Q1Protection (Strip) Heater, ("a" circuit) (CERN lead #1-)	✓
M14	5	H1bQ1	YT1121+	HB1	Q1 Protection (Strip) Heater, ("b" circuit) (CERN lead #2+)	✓
M15	2	H1aQ2a	YT1112+		Q2a Protection (Strip) Heater, 1-4 & 2-3 circuit (FNAL lead A+) (CERN lead #1+)	✓
M15	4	H2bQ1	YT1121-	HB2	Q1 Protection (Strip) Heater, ("b" circuit) (CERN lead #2-)	✓
M16	1	H2aQ2a	YT1112-		Q2a Protection (Strip) Heater, 1-4 & 2-3 circuit (FNAL lead A-) (CERN lead #1-)	✓
M16	3	H1bQ2a	YT1122+		Q2a Protection (Strip) Heater, 1-2 & 3-4 circuit (FNAL lead B+) (CERN lead#2+)	✓
M16	5	H2bQ2a	YT1122-		Q2a Protection (Strip) Heater, 1-2 & 3-4 circuit (FNAL lead B-) (CERN lead #2-)	✓
M17	2	H2aQ2b	YT1132-		Q2b Protection (Strip) Heater, 1-4 & 2-3 circuit (FNAL lead A-) (CERN lead #1-)	✓
M17	4	H1aQ2b	YT1132+		Q2b Protection (Strip) Heater, 1-4 & 2-3 circuit (FNAL lead A+) (CERN lead #1+)	✓
M18	1	H1bQ2b	YT1142+		Q2b Protection (Strip) Heater, 1-2 & 3-4 circuit (FNAL lead B+) (CERN lead#2+)	✓
M18	3	H2bQ2b	YT1142-		Q2b Protection (Strip) Heater, 1-2 & 3-4 circuit (FNAL lead B-) (CERN lead #2-)	✓
M20	1	TaQ1_I+	TT8311 I+		Q1 RTD, primary Wire color: Yellow	✓
M20	2	TaQ1_I-	TT8311 I-		Q1 RTD, primary Wire color: Green	✓
M20	3	TaQ1_V+	TT8311 U+		Q1 RTD, primary Wire color: Black	✓
M20	4	TaQ1_V-	TT8311 U-		Q1 RTD, primary Wire color: Red	✓
M20	5	TbQ1_I+	TT8321 I+		Q1 RTD, redundant: Wire color: Yellow	✓
M20	6	TbQ1_I-	TT8321 I-		Q1 RTD, redundant: Wire color: Green	✓
M20	11	TbQ1_V+	TT8321 U+		Q1 RTD, redundant: Wire color: Black	✓
M20	10	TbQ1_V-	TT8321 U-		Q1 RTD, redundant: Wire color: Red	✓
M20	9	TaQ2a_I+	TT8312 I+		Q2a RTD, primary Wire color: Yellow	✓
M20	8	TaQ2a_I-	TT8312 I-		Q2a RTD, primary Wire color: Green	✓

Module	Pin	Fermi	CERN	KEK	Description	Done
M20	7	TaQ2a_V+	TT8312 U+		Q2a RTD, primary Wire color: Black	✓
M20	12	TaQ2a_V-	TT8312 U-		Q2a RTD, primary Wire color: Red	✓
M20	13	TbQ2a_I+	TT8322 I+		Q2a RTD, redundant: Wire color: Yellow	✓
M20	14	TbQ2a_I-	TT8322 I-		Q2a RTD, redundant: Wire color: Green	✓
M20	15	TbQ2a_V+	TT8322 U+		Q2a RTD, redundant: Wire color: Black	✓
M20	16	TbQ2a_V-	TT8322 U-		Q2a RTD, redundant: Wire color: Red	✓
M21	1	TaQ2b_I+	TT8332 I+		Q2b RTD, primary Wire color: Yellow	✓
M21	2	TaQ2b_I-	TT8332 I-		Q2b RTD, primary Wire color: Green	✓
M21	3	TaQ2b_V+	TT8332 U+		Q2b RTD, primary Wire color: Black	✓
M21	4	TaQ2b_V-	TT8332 U-		Q2b RTD, primary Wire color: Red	✓
M21	5	TbQ2b_I+	TT8342 I+		Q2b RTD, redundant: Wire color: Yellow	✓
M21	6	TbQ2b_I-	TT8342 I-		Q2b RTD, redundant: Wire color: Green	✓
M21	11	TbQ2b_V+	TT8342 U+		Q2b RTD, redundant: Wire color: Black	✓
M21	10	TbQ2b_V-	TT8342 U-		Q2b RTD, redundant: Wire color: Red	✓

Technician(s) — Date: 1-29-05

Responsible Authority/Physicist (ELECT + HIPOT) — Date: 1-31-05

Traveler Title:	Specification No:	Revision:	DR No:
LHC Q3 LMQXC Module Assembly Traveler	5520-TR-333729	A	HGQ-0527

Step No:	Drawing No:	Routing Form No:	Serial No:	Rework ID:
22.0	ME 369900		LMQXC02	0

Discrepancy Description:

During the electrical checkout of the hypertronics connector, electrical measurements show that EH8342+ and EH8342- are swapped with each other.

SCANNED
MAY 19 2005
TD-FED PLANT ENGINEERING

Originator: Damon Bice

Date: 2/2/2005

Cause of Nonconformance:

The two wires in question were reversed in the connector during installation of these wires.

Responsible Authority: Fred Nobrega

Date: 2/4/2005

Disposition:

Unsolder wires in question, reverse them into their proper orientation, resolder them, and recheck all wires in both connectors to ensure they remain electrically sound.

Responsible Authority: Fred Nobrega

Date: 2/4/2005

Corrective Action to Prevent Recurrence:

Follow the traveler.

Responsible Authority: Fred Nobrega

Date: 2/16/2005

Corrective Action/Disposition Verified By: John Szostak

Date: 2/17/2005

Will Configuration be affected?: ☐ YES ☑ NO

Identified problem area:

☐ Material ☐ Manpower ☑ Method ☐ Machine ☐ Measurement

Reviewed By: Bob Jensen

Date: 2/17/2005

Traveler Title:	Specification No:	Revision:	DR No:
LHC Q3 LMQXC Module Assembly Traveler	333729	A	4130

Step No:	Drawing No:	Routing Form No:	Serial No:	Rework ID:
18.8	MB-490096	82008	LMQXC02	0

Discrepancy Description:

Part 430047 was modified per Rodger's instruction, yet still doesn't function properly. The tension block sticks when compressed in the straight down or side to side motion. The step for installing this assembly (430096) does not exist in the traveler.

Originator: Damon Bice

Date: 1/18/2005

Cause of Nonconformance:

Screws stick in holes in Tensioner Block (MB-430047)

Responsible Authority: Rodger Bossert

Date: 7/26/2005 9:23:02 AM

Disposition:

Modify Tensioner Block (MB-430047) to make countersink holes into slots. (ECO#5748) File holes at assembly as shown in sketch.

Responsible Authority: Rodger Bossert

Date: 7/26/2005

Corrective Action to Prevent Recurrence:

Add step to traveler to file holes with approval/signoff by Responsible Authority. (TRR No. 1695)

Responsible Authority: Rodger Bossert

Date: 7/26/2005

Corrective Action/Disposition Verified By: John Szostak

Date: 7/26/2005 9:28:53 AM

Will Configuration be affected?: ☐ YES ☑ NO

Identified problem area:

☑ Material ☐ Manpower ☐ Method ☐ Machine ☐ Measurement

Reviewed By: Bob Jensen

Date: 8/2/2005

Traveler Title:	Specification No:	Revision:	DR No:
LHC Q3 LMQXC Module Assembly Traveler	333729	A	4131

Step No:	Drawing No:	Routing Form No:	Serial No:	Rework ID:
18.8	MD-430044	81469	LMQXC02	0

Discrepancy Description:

Part number 430047 is not modified per most recent drawing revision (B is most recent). This part needs to be modified before installation can occur.

Originator: Damon Bice

Date: 1/18/2005

Cause of Nonconformance:

Part was issued before stock was set out for modification.

Responsible Authority: Rodger Bossert

Date: 7/20/2005 9:46:47 AM

Disposition:

Have part modified and install.

Responsible Authority: Rodger Bossert

Date: 7/20/2005

Corrective Action to Prevent Recurrence:

None required. Parts in stock have been modified. No traveler change.

Responsible Authority: Rodger Bossert

Date: 7/20/2005

Corrective Action/Disposition Verified By: John Szostak

Date: 7/22/2005 2:26:40 PM

Will Configuration be affected?: ☐ YES ☑ NO

Identified problem area:

☑ Material ☐ Manpower ☐ Method ☐ Machine ☐ Measurement

Reviewed By: Bob Jensen

Date: 8/2/2005

Revision Request Control Number: 1711

Specification Number: 5520 - TR - 333730 Current Revision: A

Traveler or Document Title LHC Q3 LQXC Cryostat Final Assembly Traveler

Step #/Description of Revision:

1.6 Added Step. "Protect the bellows during all stages of production." DR No. HGQ-0500.
3.4 Modified Step. Changed to "Attach the Leak Check sticker for the Vacuum Vessel Assembly (ME-390133) per ES-107240 to the table below." Per DR No. HGQ-0469.
4.0 Modified Step. Added, removed and re-arranged sequence of steps per marked up traveler from LHC Production Engineer.
4.41 Added Step. "Install the Fiducial Mounting Blocks (MB-390808) per Q3 Cold Mass Welded Assembly (ME-390529)."
4.42 Added Step. "Weld the Fiducial Mounting Blocks (MB-390808) per Q3 Cold Mass Welded Assembly (ME-390529)."
4.45 Modified Step. Added more Leak Check boxes for all three 4.5k Intercept Line Leak Checks. Added picture showing locations of each and numbering.
4.46 Added Step. "Leak check the Cooldown Line (MD-390225)." per production request.
4.47 Added Step. "Leak check the Pumping Line (MB-390224)." per production request.
4.66 Modified Step. Added pictures showing each of the three 4.5k Intercept Lines (MB-390226).
4.67 Added Step. "Leak check the Cooldown Line (MD-390225)."
4.68 Added Step. "Leak check the Pumping Line (MB-390224)."
8.5 Removed Step. "Install the Vinyl Flange Covers (MA-390491), (MA-390492), (MA-390493), (MA-390494), & the Alignment Fiducial Covers (MA-390495)." Moved to Shipping Traveler per production request.
8.5 Added Step. "Perform a pressurized Leak Check of the Cryostat Assembly." Per LQXC02.

John Szostak	Jim Rife	1/26/2005
Originator	Responsible Authority	Date
Revision Incorporated into the Traveler:	John Szostak	5/19/2005
	Revision Incorporated By	Date
Process Engineering Final Review:	Bob Jensen	5/19/2005
	Process Engineering/Designee	Date

Instructions for the completion of the Revision Request Form

Note(s):

Multiple steps may be effected by one Revision Request Form but only one specific Traveler or Document may be effected by each Revision Request Form.

If completing this form by hand, a Revision Request Control Number must be obtained before processing.

If completing this form entirely by electronic means, the printed copy to be filed in the Process Engineering Office is to be initialed by the individual incorporating the Revision Request and the individual who reviewed the Traveler or Document.

Originator Instructions:

1) Specification Number: - Enter the Specification Number of the Traveler or Document to be revised. (Document title is inserted automatically from the spec. #)

2) Current Revision: - Enter the Revision of the Traveler or Document to be revised.

3) Step# / Description of the Revision: - Enter a description of the revision to be made and the step# it applies to, if applicable. If needed to describe the revision attach a copy of the page(s). If the revision is coming from a related document such as a Discrepancy Report or an Engineering Order attach a copy of that document to the Revision Request Form.

4) Originator: - Originator is the person generating the form. (Select Name from List)

5) Responsible Authority: - Responsible Authority is person responsible for the process in question. (Select Name from List)

Process Engineering Office Instructions:

1) Revision Incorporated into the Traveler: - Signature of the individual who incorporated the revision.

2) Process Engineering Final Review: - Review the Traveler or Document revised, sign and date the form. The original completed Revision Request Form will be retained by the Process Engineering Office in the Revision Request Binder.

Revision Request Control Number: 1721

Specification Number: 5520 - TR - 333729 Current Revision: B

Traveler or Document Title LHC Q3 LMQXC Module Assembly Traveler

Step #/Description of Revision:

7.6 Modified Step. Modified Table. Added Column for RTD Serial Number per LHC Production Supervisor.
7.14 Modified Step. Added electricals performed by MTF.
22.3 Modified Step. Added electricals performed by MTF.
19.3 Modified Step. Changed to "Install the Suspension System Adjusting Screws (MB-390039) and Socket Head Cap Screws (MA-393021) into the Vacuum Vessel to hold the Fixed Support Assembly in place. Coat all screw threads with Molybdenum Disulfide prior to installation." Per production request.
19.6 Modified Step. Changed to "Install the Suspension System Adjusting Screws (MB-390039) and Socket Head Cap Screws (MA-393021) into the Vacuum Vessel to hold the Fixed Support Assembly in place. Coat all screw threads with Molybdenum disulfide prior to installation." Per production request.

John Szostak	Jim Rife	3/30/2005
Originator	Responsible Authority	Date
Revision Incorporated into the Traveler:	John Szostak	6/8/2005
	Revision Incorporated By	Date
Process Engineering Final Review:	Jamie Blowers	6/8/2005
	Process Engineering/Designee	Date

Instructions for the completion of the Revision Request Form

Note(s):

Multiple steps may be effected by one Revision Request Form but only one specific Traveler or Document may be effected by each Revision Request Form.

If completing this form by hand, a Revision Request Control Number must be obtained before processing.

If completing this form entirely by electronic means, the printed copy to be filed in the Process Engineering Office is to be initialed by the individual incorporating the Revision Request and the individual who reviewed the Traveler or Document.

Originator Instructions:

1) Specification Number: - Enter the Specification Number of the Traveler or Document to be revised. (Document title is inserted automatically from the spec. #)

2) Current Revision: - Enter the Revision of the Traveler or Document to be revised.

3) Step# / Description of the Revision: - Enter a description of the revision to be made and the step# it applies to, if applicable. If needed to describe the revision attach a copy of the page(s). If the revision is coming from a related document such as a Discrepancy Report or an Engineering Order attach a copy of that document to the Revision Request Form.

4) Originator: - Originator is the person generating the form. (Select Name from List)

5) Responsible Authority: - Responsible Authority is person responsible for the process in question. (Select Name from List)

Process Engineering Office Instructions:

1) Revision Incorporated into the Traveler: - Signature of the individual who incorporated the revision.

2) Process Engineering Final Review: - Review the Traveler or Document revised, sign and date the form. The original completed Revision Request Form will be retained by the Process Engineering Office in the Revision Request Binder.

Cryogenic Thermometer Traveller

DESCRIPTION

LMQXCØ2

Part description:	Cryogenic thermometer	**Top Assembly Identification:**	
Part Identification:	HCQITESCXT-CR012700		
Serial Number:	CX_LS_X16834	**Manufactured By:**	Fermilab

CABLING

TT 8313

Connector Tag Name

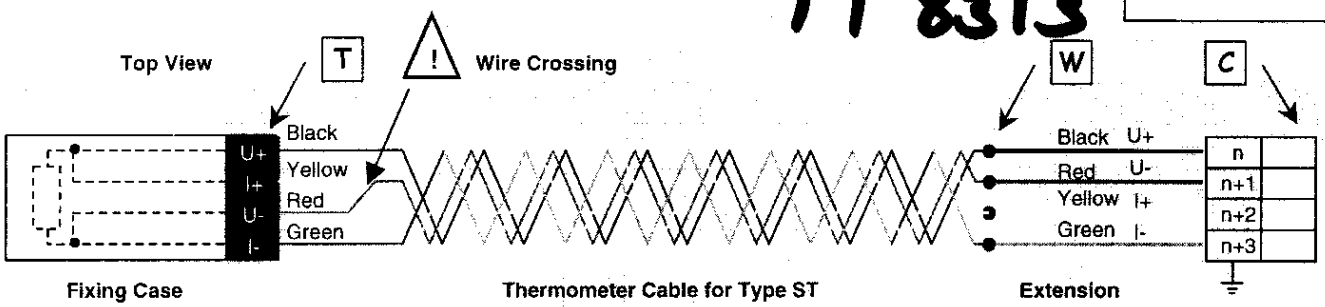

Fixing Case

Thread ☐
Hole ☐
Stud ☐

Thermometer Cable for Type ST

ρ (300 K) = 0.32 Ohm/m
Copper AWG 30
Length = ☐ m

Extension

ρ (300 K) = 0.07 Ohm/m
Copper AWG 24
Length: 0.8 m

CHECKS

Intervention	Date/ DD-MMM-YYYY	Check Point	R(U+,U-,I+,I-) [Ohm] 4W	R(U-,I-) [Ohm] 2W	R(U+,I+) [Ohm] 2W	R(U+,GND) [Ohm] 2W	Temperature [K]	Firm/Laboratory	Checked by
Calibration	*21-Jan-2002*	T	*67.52*	*n.a*	*n.a*	*OVL*	*Ambient*	*IPN*	*Joly*
Expedition	*12-Mar-2003*	T	*66.128*	*0.1*	*0.1*	*OVL*	*293*	*CERN*	*Grivat*
Reception		T W C	67.955					Fermi	Evans
		T W C							
		T W C							
		T W C							
		T W C							
		T W C							
		T W C							
		T W C							
		T W C							
		T W C							
		T W C							
		T W C							
		T W C							
		T W C							
		T W C							
		T W C							
		T W C							
		T W C							
		T W C							
		T W C							
		T W C							
		T W C							
		T W C							
		T W C							
		T W C							

Cryogenic Thermometer Traveller

DESCRIPTION

LMaxCØ2

Part description:	Cryogenic thermometer	**Top Assembly Identification:**	
Part Identification:	HCQITESCXT-CR012820		
Serial Number:	CX_LS_X16861	**Manufactured By:**	Fermilab

CABLING

TT 8323

Connector Tag Name

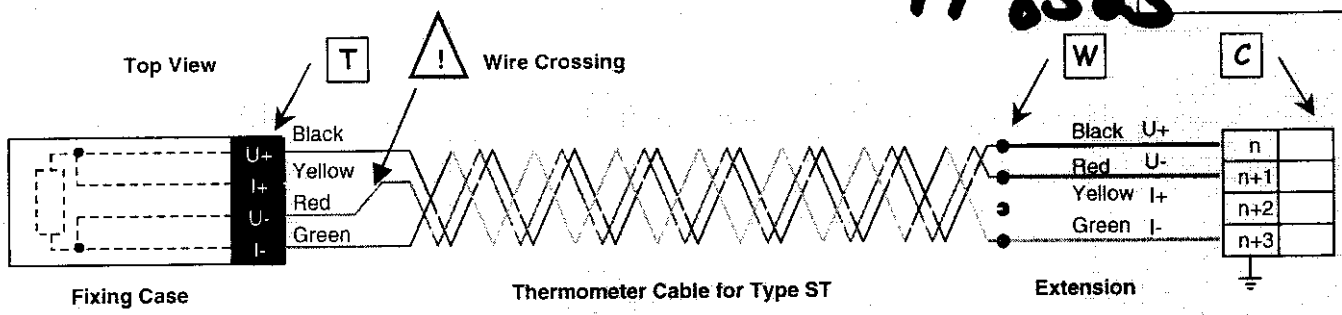

Fixing Case

Thread ☐
Hole ☐
Stud ☐

Thermometer Cable for Type ST

ρ (300 K) = 0.32 Ohm/m
Copper AWG 30
Length = ☐ m

Extension

ρ (300 K) = 0.07 Ohm/m
Copper AWG 24
Length: 0.8 m

CHECKS

Intervention	Date/ DD-MMM-YYYY	Check Point	R(U+,U-,I+,I-) [Ohm] 4W	R(U-,I-) [Ohm] 2W	R(U+,I+) [Ohm] 2W	R(U+,GND) [Ohm] 2W	Temperature [K]	Firm/Laboratory	Checked by
Calibration	*21-Jan-2002*	T	*66.37*	*n.a*	*n.a*	*OVL*	*Ambient*	*IPN*	*Joly*
Expedition	*12-Mar-2003*	T	*64.761*	*0.1*	*0.1*	*OVL*	*293*	*CERN*	*Grivat*
Reception		T W C	66.612					Fermi.	Evans
		T W C							
		T W C							
		T W C							
		T W C							
		T W C							
		T W C							
		T W C							
		T W C							
		T W C							
		T W C							
		T W C							
		T W C							
		T W C							
		T W C							
		T W C							
		T W C							
		T W C							
		T W C							
		T W C							
		T W C							
		T W C							
		T W C							
		T W C							