Document ID:

3844

Rev 0, pp 1 - 150

Rev 1, pp 151 - 256

# LHC Q3 LMQXC Module Assembly Traveler

## 333729 / Rev. B

**Job No:** **248**

**E + F Project/Task No.:** **300/1.1.1.6.2**

**M + S Project/Task No.:** **300/1.1.1.6.2**

**Place This Side Down For Scanning!!!**

Magnet Travelers

# LMQXC03-0

Document ID:

3844

Job No.:

248

Project/Task No.

300/1.1.1.6.2

Series:

LQXC

Serial No:

LMQXC03

Rework ID:

0

Specification No.:

333729

Revision:

B

# LMQXC03-0

**Fermi National Accelerator Laboratory**
**Batavia, IL 60510**

# LARGE HADRON COLLIDER
# Q3 - LMQXC
# COLD MASS MODULE ASSEMBLY TRAVELER

## Reference Drawing(s):
## Q3 Cold Mass Welded Assembly (ME-390529)
## Q3 Module Assembly (ME-369900)

**Project/Task Number:** *300/1.1.1.6.2*

**Released By:** *John Szostak* **Magnet/Device Series:** *LQXC*

**Date Issued:** *3/8/2005 12:36:24 PM* **Scanned Pages:** ~~146~~ 150

**Prepared by:** J. Szostak

| Title | Signature | Date |
|---|---|---|
| TD / E&F Process Engineering | *Jamie Blowers*<br>Bob Jensen / Designee | *3/8/05* |
| TD / LHC Production Supervisor | *Jim Rife*<br>Jim Rife / Designee | *3/8/05* |
| TD / LHC Production Engineer | *Rodger Bossert*<br>Rodger Bossert / Designee | *3/8/05* |
| TD / LHC Project Engineer Cryostat | *Tom Nicol*<br>Tom Nicol / Designee | *3/8/05* |
| TD / LHC Project Physicist | Michael Lamm / Designee | |
| TD / LHC Program Manager | *Jim Kerby*<br>Jim Kerby / Designee | *3/8/05* |

**Revision Page (1 of 2)**

| Revision | Step No. | Revision Description | TRR No. | Date |
|---|---|---|---|---|
| None | N/A | Initial Release | N/A | 8/20/04 |
| A | 5.0 | Modified Step. Modified to reflect production floor process. | 1682 | 12/15/04 |
| | 9.2 | Modified Step. Changed to Crew Chief signoff. | | |
| | 9.3 | Modified Step. Changed to Weldor signoff. | | |
| | 12.3 | Modified Step. Added "...and Figure 12.0." | | |
| | 15.2 | Modified Step. Changed to "Using the Valhalla 4300B, connect 10mA applied voltage thru the corrector Power Leads. Measure Resistance and record in the table below." Modified Table. Added Picture of Corrector Bus Leads. | | |
| | 17.1 | Modified Step. Changed (MC-369552) to (MC-369522). | | |
| | 17.4 | Modified Step. Changed IP to Non-IP. | | |
| | 17.6 | Modified Step. Changed IP to Non-IP. | | |
| | 17.7.2 | Modified Step. Changed Non-IP to IP. | | |
| | 17.8 | Modified Step. Changed Non-IP to IP. | | |
| | 17.10 | Modified Step. Changed Non-IP to IP. | | |
| | 18.9 | Added Step. "Tack weld the Extension Tube (MD-390667) to the Cold Mass per (ME-390529)." | | |
| | 18.11 | Added Step. "Weld the Extension Tube (MD-390667) to the Cold Mass per (ME-390529)." | | |
| | 19.9 | Modified Step. Changed to "Measure the distance between the Suspension Rings at the bottom of the Threaded Rods and record measurements below. Copy this page and place copy in designated book for later reference. (TR-333730, Q3 Cryostat Final Assembly, Step 5.1)." | | |
| | 19.17 | Modified Step. Changed Non-IP to IP. | | |
| | 19.18 | Modified Step. Removed Center – North and Center – South. | | |
| | 19.21 | Removed Step. "Weld the Shielding Blocks (MB-390534) to the Cold Mass per Q3 Suspension System Installation (ME-390525)." No shielding Blocks | | |
| | 19.22 | Modified Step. Added 112.5. | | |
| | 19.23 | Modified Step. Added 337.5. | | |
| | 21.1 | Modified Step. Modified Resistance Table. | | |
| | 21.2 | Modified Step. Changed to "Using the Valhalla 4300B, connect 10mA applied voltage thru the corrector Power Leads. Measure Resistance and record in the table below." Modified Table. Added Picture of Corrector Bus Leads. | | |
| | 22.2 | Added Step. Added "Assemble/Install Hypertronics Connectors, **without Cover** at **IP End** as per Q3 Module Assembly (ME-369900). Pin Numbers for connectors are shown in Table 22.2 below." | | |
| | 22.3 | Added Step. "Inspect Hypertronics Connector. Ensure that it is free of flux and that Kapton has been installed properly." | | |
| | 22.4 | Added Step. "After LHC Project Physicist / designee has signed the above step, complete the installation of the Hypertronics." | | |
| | 23.2 | Modified Step. Changed to "Using the Valhalla 4300B, connect 10mA applied voltage thru the corrector Power Leads. Measure Resistance and record in the table below." Modified Table. Added Picture of Corrector Bus Leads. | | |
| | 23.4 | Added Step. "Ensure electrical measurements are acceptable and confirm Hypertronics Connector has been installed properly." | | |

**Revision Page (2 of 2)**

| Revision | Step No. | Revision Description | TRR No. | Date |
|---|---|---|---|---|
| B | 1.6 | Added Step. "Protect the bellows during all stages of production." **DR No. HGQ-0500.** | 1695 | 3/4/05 |
| | 7.6 | Removed Step. Moved to after electrical. New step 7.8. | | |
| | 7.0 to 17.0 | Modified order of steps per production request. (Subsequent changes to steps will reflect new Step Numbers) | | |
| | 7.14 | New step. "Splice Cold mass voltage taps to wire bundle. Verify splices electrically." Per LMQXC02. | | |
| | 7.15 | New step. "Attach wires using putty and install the Voltage Tap Splice Cover Block (MC-430146)." Per LMQXC02. | | |
| | 9.5 | Added Step. "Solder Corrector Wires per Q3 Module Assembly (ME-369900) and as shown in Figure 9.4-A." | | |
| | 9.6 | Added Step. "Install voltage taps on MCBXA corrector leads. One tap is to be soldered to the "A" Lead of each corrector element. Wire labels are shown below." | | |
| | 11.12 | Modified Step. Added check boxes and specifications for measurements taken with Mini-level. | | |
| | 12.1 | Modified Step. Added picture, (ME-369900 - Rev. A, Sheet 3 of 5), per production request. | | |
| | 12.11 | Added Step. "Solder MQSX Corrector Wires." | | |
| | 12.13 | New Step. "At the IP End, attach Spider Assembly (MD-430072) as per Q3 Module Assembly (ME-369900)." | | |
| | 15.3 | New Step. "At the Non-IP End, attach Spider Assembly (MB-430096) as per Q3 Module Assembly (ME-369900)." **Per DR No. HGQ-0520.** | | |
| | 16.2 | Modified Step. Added "Record Initial resistance of Corrector Element and record below." Added column to record initial resistance of Corrector Element. | | |
| | 16.3 | Added Step. "Attach Backing Splines as per Q3 Module Assembly (ME-369900)." | | |
| | 16.4 | Added Step. "At the IP End (Lead End) wrap the Springboard Assemblies in Kapton and then wrap with Kevlar String (MA-369912) every ½ - ¾" over Kapton as per Q3 Module Assembly (ME-369900)." | | |
| | 16.5 | Added Step. "At the Non-IP End (Non-Lead End) wrap the Springboard Assemblies in Kapton and then wrap with Kevlar String (MA-369912) every ½ - ¾" over Kapton as per Q3 Module Assembly (ME-369900)." | | |
| | 17.3 | Modified Step. Moved Step per production request. "Position the Beam Tube (MC-369522) longitudinally per Q3 Cold Mass Welded Assembly (ME-390529)." New Step 20.1 | | |
| | 19.2 | Modified Step. Changed to "Insert the Fixed Support Assembly (ME-390041) into the Vacuum Vessel and position at the IP End." | | |
| | 19.5 | Modified Step. Changed to "Insert the Sliding Support Assembly (ME-390042) in to the Vacuum Vessel and position at the Non-IP End." | | |
| | 20.8 | Modified Step. Changed to "Perform a stretched wire measurement of the system to align the Beam Tube Flange within ± .5 mm." | | |
| | 21.2 | New Step. "Check Q1 & Q2 Instrumentation Bus Wires for Continuity." Added Table. | | |
| | 21.3 | Modified Step. Added "Record Initial resistance of Corrector Element and record below." Added column to record initial resistance of Corrector Element. | | |
| | 22.1 | Modified Step. Changed Picture of "Hypertronics Connector Pin Locations (Q3 non-IP end) VIEW: Male (pin) solder cup side" to show correct hookup configuration to DFBX. | | |
| | 23.0 | Modified Step. Removed electrical checks that are previously performed by MTF, per production request. | | |

**Ensure appropriate memos and specific instructions are placed with the traveler before issuing the sub traveler binder to production.**

1.0 General Notes

1.1 All steps that require a sign-off shall include the Technician/Technician(s)s first initial and full last name.

1.2 No erasures or white out will be permitted to any documentation. All incorrectly entered data shall be corrected by placing a single line through the error, initial and date the error before adding the correct data.

1.3 All Discrepancy Reports issued shall be recorded in the left margin next to the applicable step.

1.4 Personnel shall perform all tasks in accordance with current applicable ES&H guidelines and those specified within the step.

1.5 Cover the product/assembly with Green Herculite (Fermi stock 1740-0100) when not being serviced or assembled.

**1.6 Protect the Bellows during all stages of production.**

2.0 Parts Kit List

2.1 Attach the completed Parts Kit for this production operation to this traveler. Ensure that the serial number on the Parts Kit matches the serial number of this traveler. Verify that the Parts Kit received is complete.

J. Spostato
Process Engineering/Designee

3/8/05
Date

3.0 Q3 Module Alignment

3.1 Record the serial number for each Magnetic Component Assembly.

Q3 Serial Number: MQXA-013

**MCBXA** Corrector Coil Serial Number: MCBXA-21

**MQSX** Corrector Coil Serial Number: MQSX-08

**MCSOX** Corrector Coil Serial Number: MQSXA-08

STOP

Responsible Authority/Physicist — Date: 3/8/05

3.2 Attach the Certificate of Conformity, for vendor supplied components, and the Quality Record, for vendor supplied components, to this traveler.
Verify that the Certificate of Conformity and /or the Quality Record (as required) has been filled out and performed by Fermilab personnel.

STOP

Crew Chief — Date: 3-8-05

4.0 Q3 Magnet Placement (Module Assembly Tooling)

4.1 Configure tooling for Q3 Cold Mass Assembly (ME-390528) per Final Cold Mass Assembly Stat – Support and Clamping Fixture (ME-369768).

Technician(s) _____ Date 3/8/05

4.2 Configure tooling for Corrector Mounting per Cold Mass / Cryostat Station Corrector Support Fixture (ME-369780), 13.780 Diameter Corrector Magnet.

Technician(s) _____ Date 3/8/05

4.3 Configure tooling for End Dome Mounting per Cold Mass Cryostat Station Final Assembly (ME-369765, View E-E).

Technician(s) _____ Date 3/8/05

4.4 Move the Q3 Cold Mass to the Cold Mass Module Assembly Tooling, placing it nearest the West End of ICB, with the Lead End of the Magnet facing west as per Q3 Cold Mass Welded Assembly (ME-390529).

Technician(s) _____ Date 3/8/05

5.0 Bus Assembly Installation

5.1 Measure the length of the Cold Mass and record below.

**Cold Mass Length:** 22'

Technician(s) Date 3/08/05

5.2 Add four feet (48 inches) to the Cold Mass Length and record below. This will be the top piece.

**Cold Mass Length from step 5.1:** 22'

**Add:** + 48 in.

**Length of top piece:** 26'

Technician(s) Date 3/8/05

STOP

Crew Chief Date 3-8-05

5.3 Cut a piece of Nomex (MB-430064) equal to the total length recorded in step 5.2. This will be referred to as the top piece.

Technician(s) Date 3/08/05

5.4 Record the total length of the top piece, recorded in step 5.2, below. Multiply the total by 2 and record the number below. This will be the length of the bottom piece.

**Length of top piece:** 26'

**Multiply by 2:** x 2

**Length of bottom piece:** 52'

Technician(s) Date 3/08/05

STOP

Crew Chief Date 3-8-05

5.5 Cut a piece of Nomex (MB-430064) equal to the total length recorded in step 5.4. This will be referred to as the bottom piece.

Technician(s) _____ Date 3-8-05

5.6 Pull the two pieces of Nomex (MB-430064) through the Bus Slot. Leave two feet of Nomex extending past the end of the Cold Mass at the Lead End and Non-Lead End. Fold top piece over top of Cold Mass and fold bottom piece under bottom of Cold Mass. (As shown n figure 5.6 below)

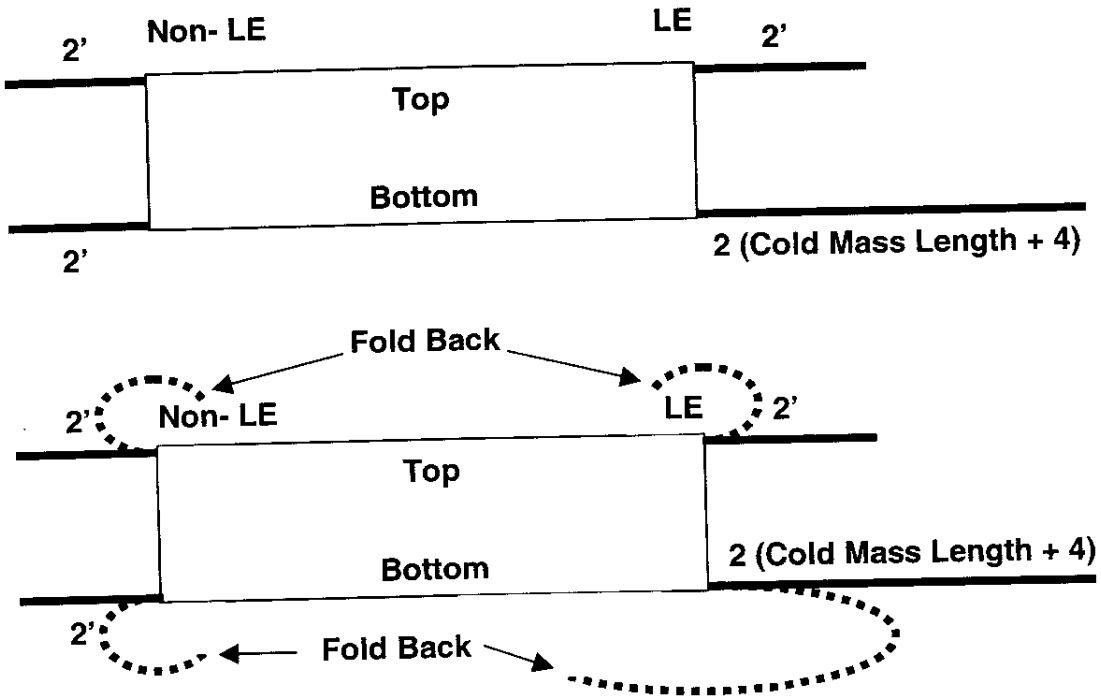


**Figure 5.6**

Technician(s) _____ Date 3-8-05

5.7 Starting at the Lead End, slide the Lead and Corrector Coil Bus Assembly (MB-430065) into Magnet Bus Slot between the two pieces of Nomex (MB-430064). The bottom piece of Nomex will move with the bus. Pull the bottom piece as it is being fed into the Cold Mass.

Technician(s) _____ Date 3-8-05

5.8 Cut Nomex (MB-430064) equal to the Length of the Cold Mass. (See Step 5.1 for reference)

Technician(s) _____ Date 3/8/05

6.0 Q3 Cold Mass Alignment

6.1 Rotate the Q3 Cold Mass, with the Power Leads facing up, into the proper orientation as shown in Figure 6.1-A.

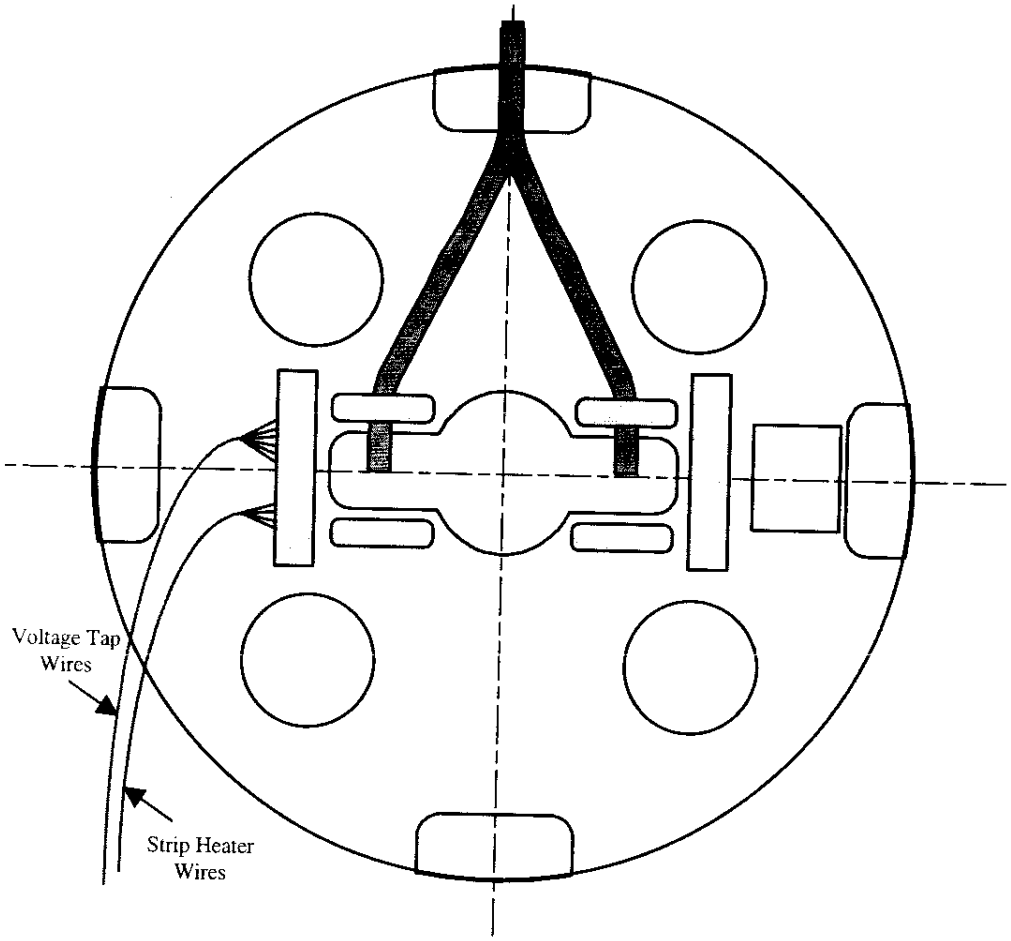


**Looking at Lead End of Q3**

**Figure 6.1-A**

Technician(s) _____ Date 3/8/05

6.2 Perform a stretched wire measurement of the system to align the Cold Mass within ± .2 mR.

STOP

Responsible Authority/Physicist _____ Date 3/15/05

7.0 Instrumentation Installation

7.1 Prepare Q3 Instrumentation Wire Feed thru (MB-430074). Build per Q3 Module Assembly Instrumentation Wire Feed thru (ME- 430074). Wire Labels and descriptions are shown in Figure 7.1 and per (MB-430074).

**Note(s):**

**USE ONLY CERN LABELS ON WIRES.**

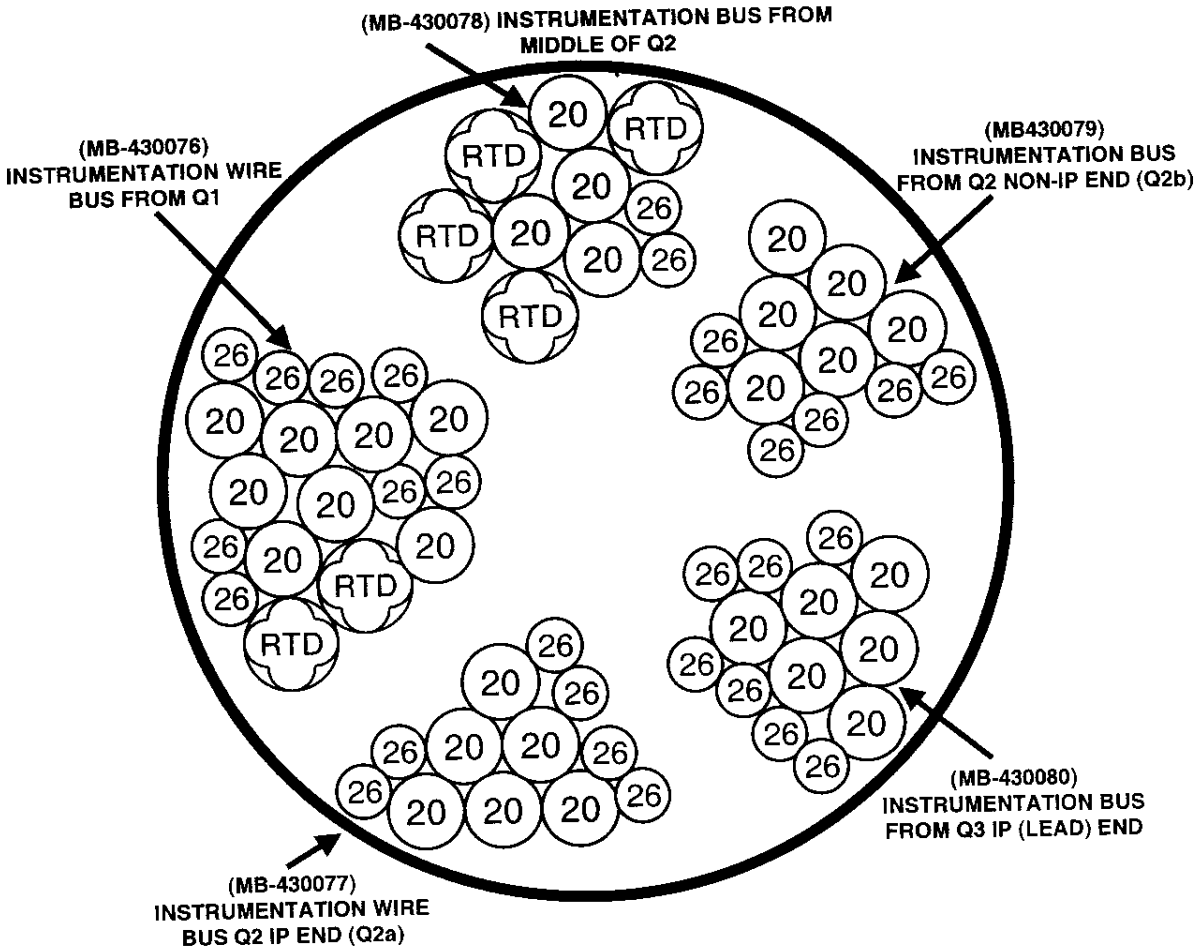


**Figure 7.1**
**INSTRUMENTATION TUBE**

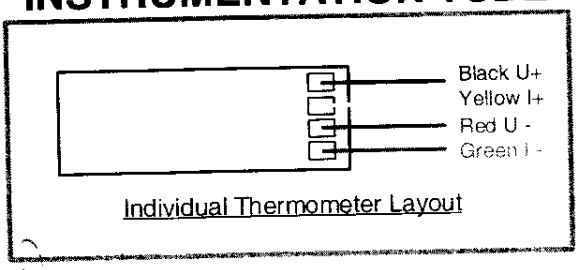


Technician(s) _____ Date 3/14/15

7.2 Slide Instrumentation Bus Assembly (MB-430074) into the proper Q3 Port as per Q3 Module Assembly (ME-369900). Verify that there is sufficient slack in cable to allow for two inches of differential thermal contraction.

Technician(s) _____ Date 3/14/05

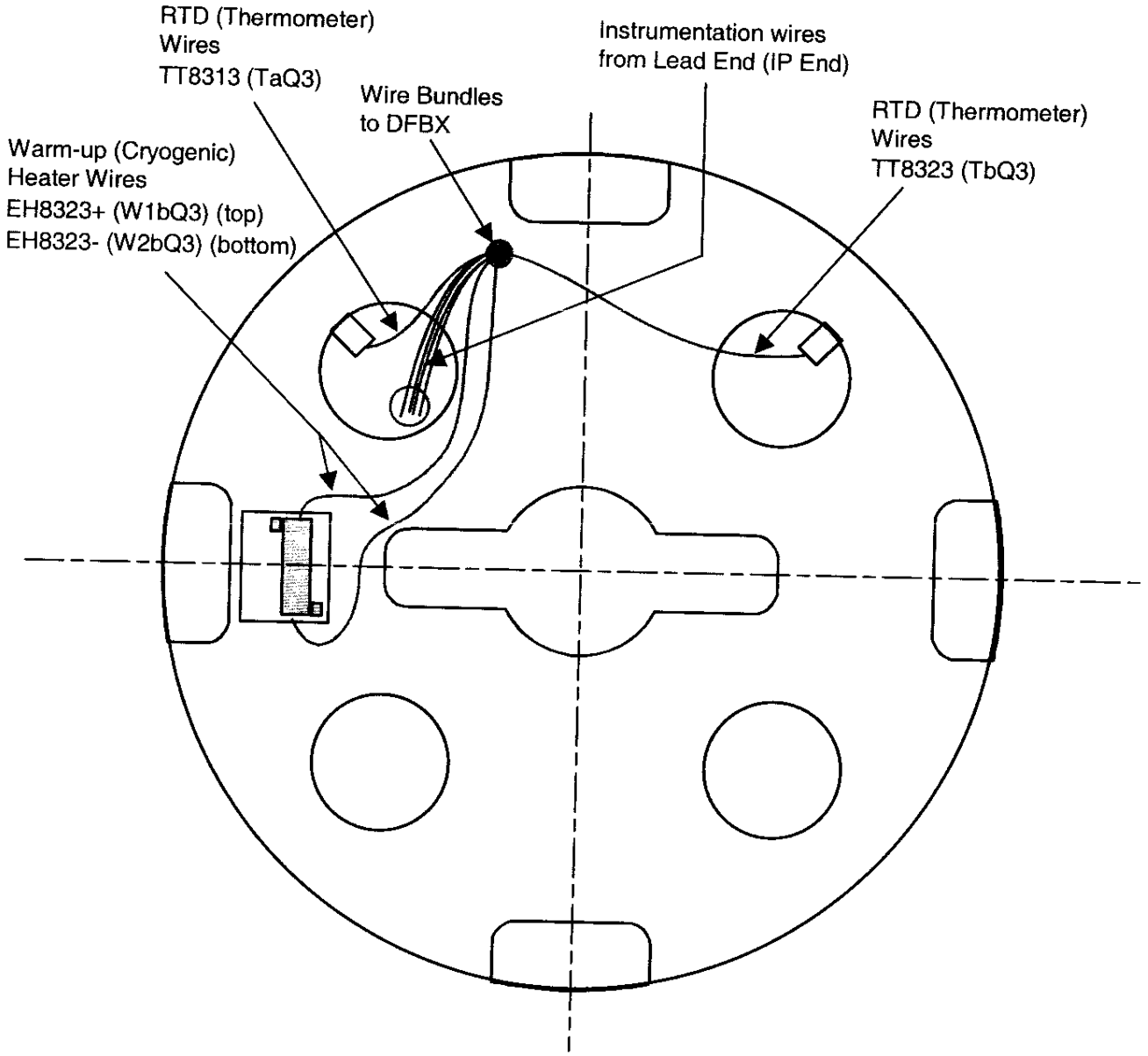


**Looking at Non-Lead End (Non-IP End) of Q3**

# Figure 7.2-A

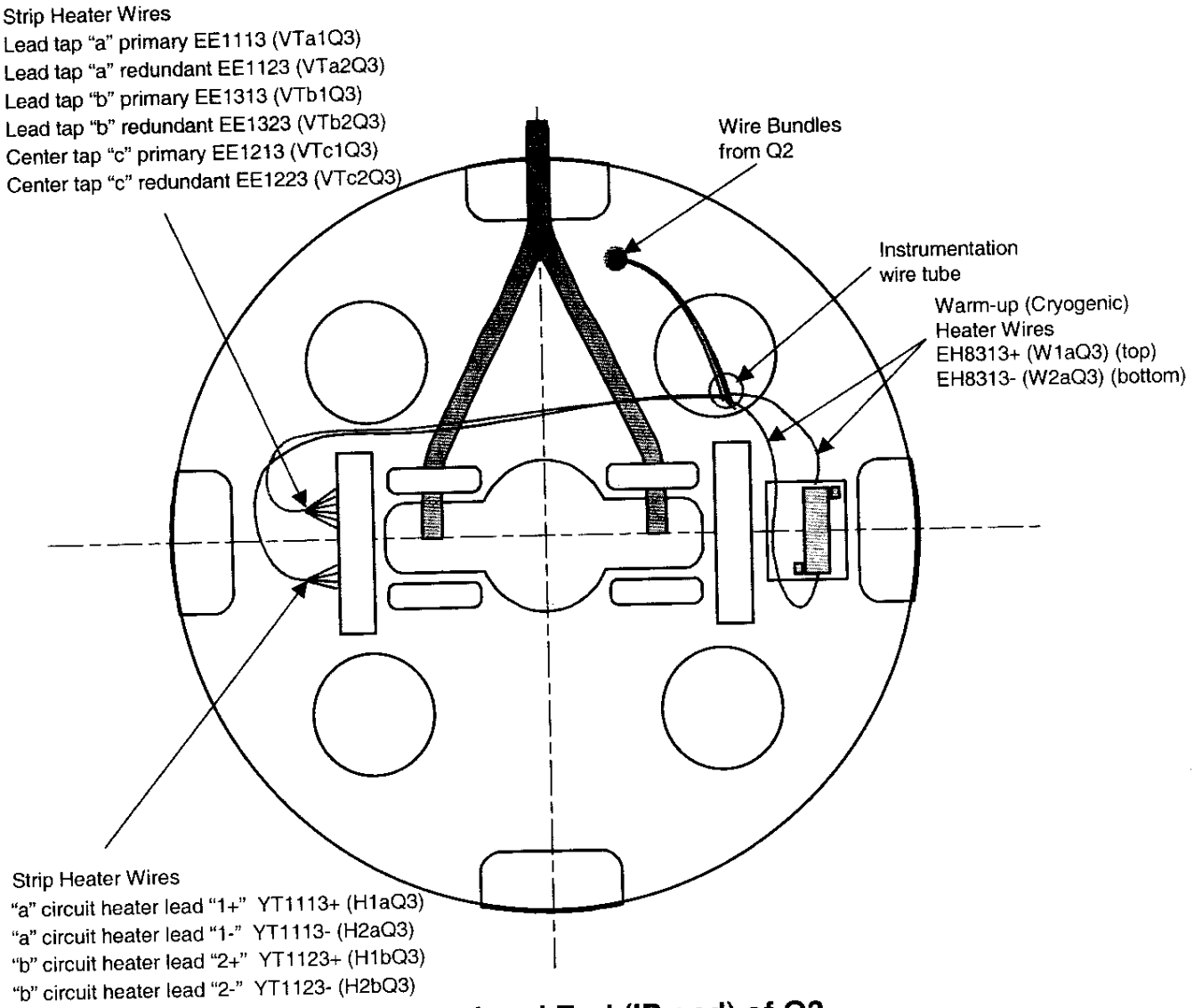


**Looking at Lead End (IP end) of Q3**

# Figure 7.2-B

7.3 Weld Warm-up Heater Base Plates (MA-369997) and RTD Mount Blocks to End Plates as per Q3 Module Assembly (ME-369900).

Weldor(s) _____ Date 3/14/05

7.4 Install Warm-up Heaters (ME-369834) to each end of Q3 as per Q3 Module Assembly (ME-369900).

7.4.1 Install Warm-up Heaters (MA-369834) onto the Warm-up Heater Base Plate (MA-369997).

7.4.2 Solder wires (MA-369832) to the Warm-up Heaters as per (ME-369900).

Technician(s) _____ Date 3/14/05

7.5 Install RTD's as per Q3 Module Assembly (ME-369900). Record Serial Numbers of each RTD in the table below. Attach Data Sheet for each RTD to traveler.

7.5.1 Attach RTD's (MA-369835) (Qty. 4) to Mounting Blocks as per Q3 Module Assembly (ME-369900).

7.5.2 Solder wires (MA-369836) to RTD's as per Q3 Module Assembly (ME-369900). Individual RTD wiring is shown in Figure 7.5.2-A below.

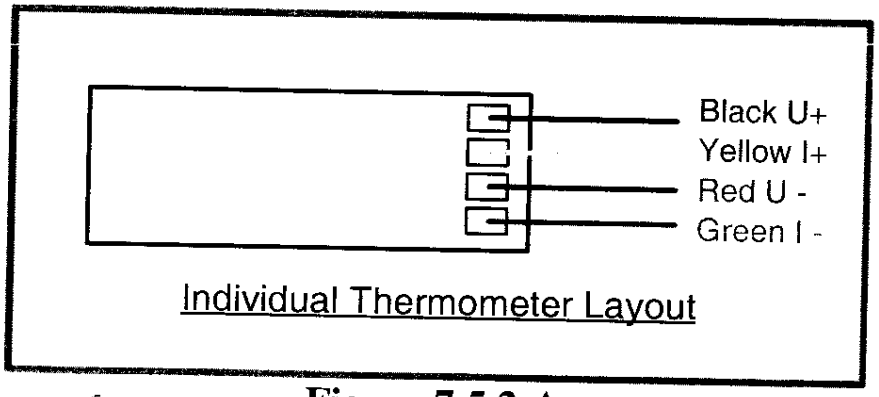


**Figure 7.5.2-A**

Technician(s) _____ Date 3/14/05

7.6 Perform a continuity check on all RTD's and Warm-Up Heaters. Record the Data below. (1mA). Record the resistance data from the Manufacturer's Traveler below. Compare RTD resistance test results to the resistance results from the Manufacturer's Traveler. Ensure RTD resistances are within **5Ω**. Attach the Manufacturer's RTD papers at the end of this traveler.

**To measure the resistance of a Thermometer (RTD):**

1. Use Hewlett Packard HP3457A digital multimeter.
2. Record temperature of building within +/- 5 degrees.
3. Press line button to turn line on.
4. Connect wires as shown in Figure below.
5. Push blue button (function key) once.
6. Push OHMF button.
7. Verify arrow in readout is above the 4WΩ (meaning a 4 wire resistance measurement).
8. Read resistance in ohms and record in traveler.

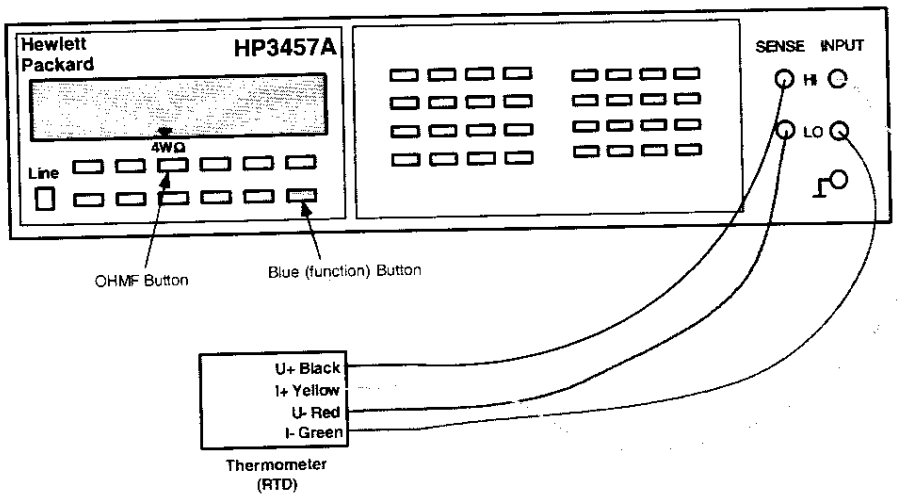


| RTD'S | | | |
|---|---|---|---|
| Building Temperature: 70° | | Time of Test: 9.45 AM | |
| Serial No. | Location | Measured Ω | Mfr. Resistance (Expedition) |
| TT8313 | Q3 Inst. Bus Side | 65.260 Ω | 67.59 Ω |
| TT8323 | Q3 Inst. Non-Bus Side | 66.74 Ω | 64.55 Ω |

| Cryogenic (Warm-up) Heaters | | |
|---|---|---|
| Building Temperature: 70° | | Time of Test: 9.54 Am |
| Location | Wire No | Measured Ω |
| Q3 Lead End (IP End) | EH8313+ | 16.5940 Ω |
| | EH8313- | |
| Q3 Non-Lead End (Non-IP End) | EH8323+ | 16.1964 Ω |
| | EH8323- | |

Technician(s)

3/5/05
Date

7.7 Hipot RTD's to 100V. Use Droege Serial No. 910 (FNAL Part No. 51330) or equivalent. (Max. Leakage < 0.1 μA)

STOP

**Have Crew Chief verify setup and sign below before continuing.**

Crew Chief _____ Date 3-15-05

| RTD'S | | |
|---|---|---|
| **Building Temperature:** US ~~9:56~~ 70° | | **Time of Test:** 9:56 AM |
| **Serial No.** | **Location** | **Hipot Leakage < 0.1 μA** |
| **TT8313** | Q3 Inst. Bus Side | < .1 μA |
| **TT8323** | Q3 Inst. Non-Bus Side | < .1 μA |

Hipot Cryogenic (Warm-up) Heaters to 300V. Use Droege Serial No. 910 (FNAL Part No. 51330) or equivalent. (Max. Leakage < 0.1 μA)

STOP

**Have Crew Chief verify setup and sign below before continuing.**

Crew Chief _____ Date 3.15.05

| Warm-up Heaters | | |
|---|---|---|
| **Building Temperature:** US ~~9:57 AM~~ 70° | | **Time of Test:** 9:57 AM |
| **Location** | **Wire No** | **Hipot Leakage < 0.1 μA** |
| Q3 Lead End (IP End) | **EH8313+** | < 0.1 μA |
| | **EH8313-** | |
| Q3 Non-Lead End (Non-IP End) | **EH8323+** | < 0.1 μA |
| | **EH8323-** | |

Technician(s) _____ Date 3/15/05

7.8 Fill out the Cryogenic Thermometer Traveller that came with the RTD.
Fill out:

- Corrector Tag Name
- Date
- Resistance Measurement
- Temperature (i.e. 77° F)
- Firm/Laboratory (Fermi)
- Checked By (Print Last Name)

**Once all information has been filled out, make a copy of the Cryogenic Thermometer Traveller and place the copy in the designated binder.**

Technician(s) _____ Date 3/15/05

STOP

Crew Chief _____ Date 3-15-05

7.9 Mount the MCBXA Corrector Mounting Ring (ME-390037) to the MCBXA Corrector Magnet.

Technician(s) _____ Date 3/15/05

7.10 Position and align the MCBXA Corrector Magnet.

Technician(s) _____ Date 3/15/05

7.11 Tack weld the MCBXA Corrector Mounting Ring (ME-390037) to the Q3 Cold Mass Assembly (ME-390528) per Q3 Cold Mass Welded Assembly (ME-390529).

Weldor _____ Date 16 MAR. 05

7.12 Weld the MCBXA Corrector Mounting Ring (ME-390037) to the Q3 Cold Mass Assembly (ME-390108) Non-Lead End per Q3 Cold Mass Welded Assembly (ME-390529).

Weldor _____ Date 16 MAR. 05

7.13 Disassemble the MCBXA Corrector Magnet from the MCBXA Corrector Mounting Ring (ME-390037).

Technician(s) _____ Date 3/16/05

7.14 Splice the Cold Mass voltage taps to the wire bundle. Verify the splices electrically.

Technician(s) _____ Date 3/29/05

7.15 Attach wires using putty and install the Voltage Tap Splice Cover Block (MC-430146).

Technician(s) _____ Date 3/29/05

7.16 Mount the MQSX Corrector Mounting Ring (MD-390209) to the MQSX Corrector Magnet.

Technician(s) _____ Date 3/15/05

7.17 Position and align the MQSX Corrector Magnet per Q3 Cold Mass Welded Assembly (ME-390529).

Technician(s) _____ Date 3/15/05

7.18 Tack weld the MQSX Corrector Mounting Ring (MD-309209) to the Q3 Cold Mass Assembly (ME-390528) per Q3 Cold Mass Welded Assembly (ME-390529).

Weldor _____ Date 16 mar. '05

7.19 Weld the MQSX Corrector Mounting Ring (MD-309209) to the Q3 Cold Mass Assembly (ME-390528) Lead End per Q3 Cold Mass Welded Assembly (ME-390529).

Weldor _____ Date 16 mar. '05

7.20 Disassemble the MQSX Corrector Magnet from the MQSX Corrector Mounting Ring (MD-309209).

Technician(s) _____ Date 3/16/05

8.0 Installation of MQSX Corrector Coil

8.1 Move the MQSX Corrector Magnet up against the Mounting Ring on the Q3 Cold Mass and bolt the MQSX Corrector Magnet to the Q3 Cold Mass using the Silver Plated Mounting Screw and torque bolts to 500 in.-lbs. Shim between the corrector and flange as necessary.

Technician(s) _____ Date 3/30/05

8.2 Verify alignment of MQSX Corrector Magnet as per Q3 Module Assembly (ME-369900).

STOP

Crew Chief _____ Date 3-30-05

STOP

Responsible Authority/Physicist _____ Date 3/30/05

8.3 Tack weld bolts and washers for mounting MQSX Corrector Magnet into place per Q3 Cold Mass Welded Assembly (ME-390529).

Weldor(s) _____ Date 9/17/05

Have Step twice 12.11 TRR# 1751

8.4 Solder Corrector Wires per Q3 Module Assembly (ME-369900) and as shown in Figure 8.5-A.

Technician(s) _____ Date 4/13/05

8.5 Install voltage taps on MQSX corrector leads. One tap is to be soldered to the "A" Lead of each corrector element. Wire label is shown below.

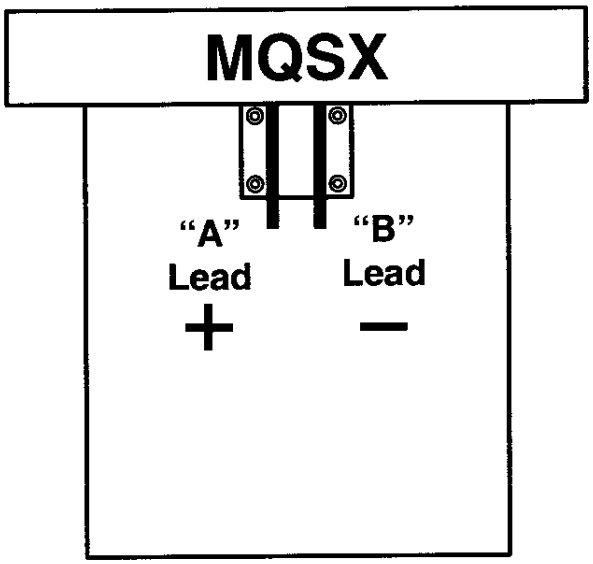


**Overhead View**

| Corrector Assembly | Corrector Element | Label |
|---|---|---|
| MQSX | MQSX | A+ lead Q3A2 (skew quadrupole) voltage tap EE8223 (VTA2) |

Technician(s) _____ Date 4/15/05

9.0 Installation of MCBXA

9.1 Move the MCBXA Corrector Magnet up against the Mounting Ring on the Q3 Magnet, and bolt the MCBXA Corrector Magnet to the Q3 Cold Mass using the 3" Silver Plated Mounting Screw (MA-390247) and torque bolts to 500 in-lbs. per Note 4 of Q3 Cold Mass Welded Assembly (ME-390529). Shim between the Corrector and Flange as necessary.

Technician(s) _____ Date 4/5/05

9.2 Verify Alignment of MCBXA Corrector Magnet as per Q3 Cold Mass Welded Assembly (ME-390529).

Technician(s) _____ Date 4-5-05

Responsible Authority/Physicist _____ Date 4/5/05

9.3 Tack weld bolts and washers for mounting Corrector into place per Q3 Cold Mass Welded Assembly (ME-390529).

Weldor(s) _____ Date 4/13/05

9.4 Route MCBXA Corrector Coil Wires as shown in Figure 9.4-A below and per Q3 Cold Mass Welded Assembly (ME-390529).

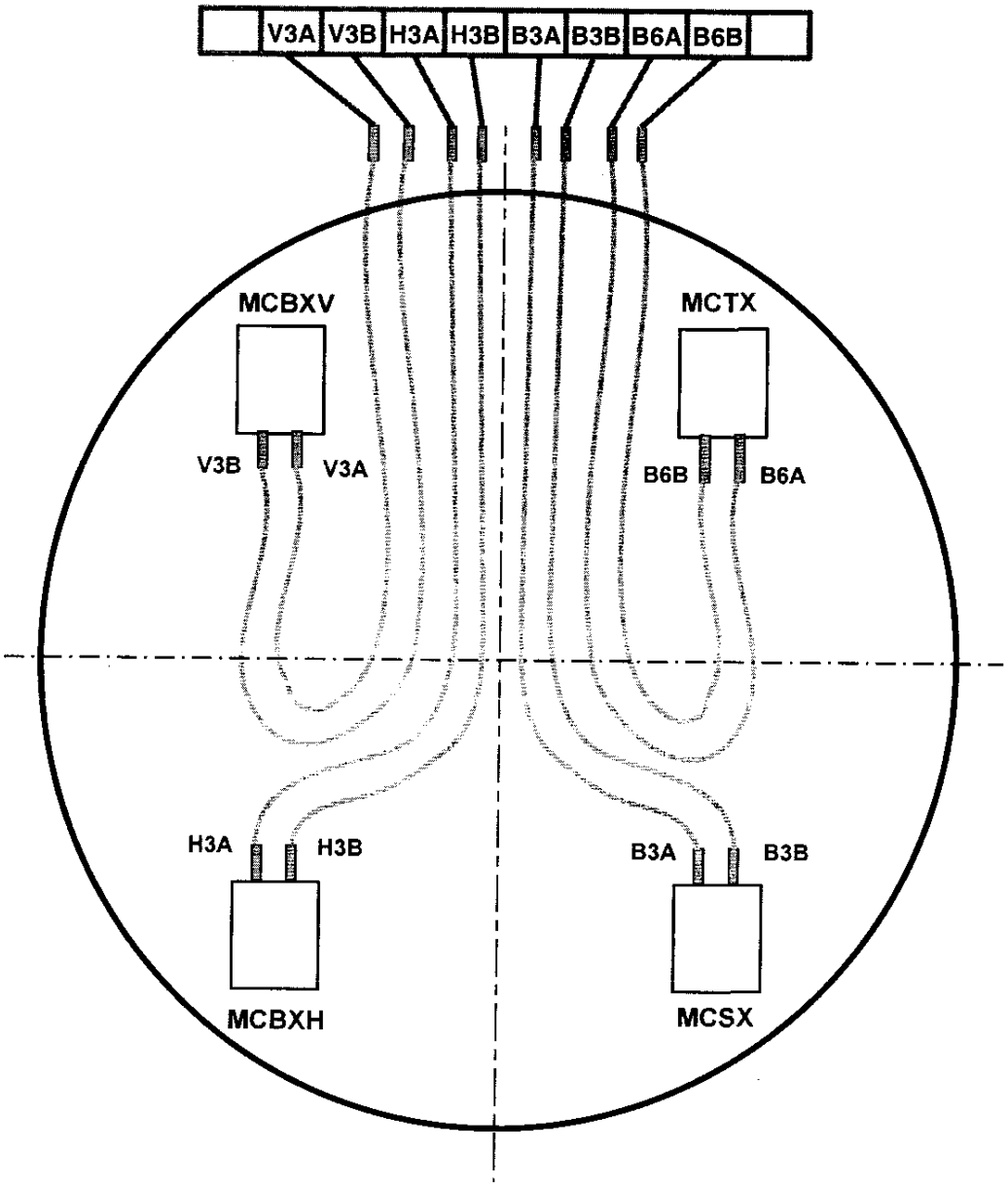


End View of MCBXA for Q3
(in "up" position)

Looking into end of correction coil from DFBX to Q3

**Figure 9.4-A**

Technician(s) _____ Date 3/27/05

9.5 Solder Corrector Wires per Q3 Module Assembly (ME-369900) and as shown in Figure 9.4-A.

Technician(s) _____ Date 3/27/05

9.6 Install voltage taps on MCBXA corrector leads. One tap is to be soldered to the "A" Lead of each corrector element. Wire labels are shown below.

| Corrector Assembly | Corrector Element | Label |
|---|---|---|
| MCBXA | MCBXH | A+ lead Q3H3 (skew dipole) voltage tap EE8123 (VTH3) |
| | MCBXV | A+ lead Q3V3 (normal dipole) voltage tap EE8113 (VTV3) |
| | MCSX | A+ lead Q3B3 (normal sextupole) voltage tap EE8313 (VTB3) |
| | MCTX | A+ lead Q3B6 (normal dodecapole) voltage tap EE8613 (VTB6) |

Technician(s) _____ Date 3/27/05

10.0 Installation of MCSOX

10.1 Mount the MCSOX Corrector Magnet to the MCSOX Corrector Mounting Ring (ME-390664).

Technician(s) _____ Date 3-30-05

10.2 Slide the MCSOX Corrector Magnet & MCSOX Corrector Mounting Ring (ME-390664) up to the MCBXA Corrector Magnet.

Technician(s) _____ Date 3-30-05

10.3 Position the MCSOX Corrector Magnet radial (Scribe Line at 0°)

Technician(s) _____ Date 3-30-05

10.4 Position the MCSOX Corrector Magnet longitudinally. (The gap between the MCBXA Magnet and the Mounting Ring should be approximately 15mm.)

Technician(s) _____ Date 3-30-05

10.5 Tack weld MCSOX Corrector Mounting Ring (ME-390664) as per Q3 Cold Mass Welded Assembly (ME-390529).

Weldor(s) _____ Date 3/30/05

10.6 Weld the MCSOX Corrector Mounting Ring (ME-390664) as per Q3 Cold Mass Welded Assembly (ME-390529).

Weldor(s) _____ Date 3/30/05

10.7 Wire the MCSOX Corrector Magnet.

Technician(s) _____ Date 4/26/05

10.8 Verify alignment of the MCSOX Corrector Magnet.

Technician(s) _____ Date 4-26-05

Responsible Authority/Physicist _____ Date 4/26/05

10.9 Tack weld the MCSOX Corrector Magnet hardware as per Q3 Cold Mass Welded Assembly (ME-390529).

Weldor(s) _____ Date 4/26/05

10.10 Solder Corrector Wires per Q3 Module Assembly (ME-369900).

Technician(s) _____ Date 4/26/05

10.11 Install voltage taps on MCSOX corrector leads. One tap is to be soldered to the "A" Lead of each corrector element. Wire labels are shown below.

| Corrector Assembly | Corrector Element | Label |
|---|---|---|
| MCSOX | MCOSX | A+ lead Q3A4 (skew octupole) voltage tap EE8423 (VTA4) |
| | MCOX | A+ lead Q3B4 (normal octupole) voltage tap EE8413 (VTB4) |
| | MCSSX | A+ lead Q3A3 (skew sextupole) voltage tap EE8323 (VTA3) |

Technician(s) _____ Date 4/27/05

11.0 Dome Setup

11.1 Attach IP End Dome (MD-390221) (Q3) to the End Dome Positioning Fixture (MD-369776).

Technician(s) _____ Date 4/5/05

11.2 Align IP End Dome (MD-390221) as shown in Q3 Cold Mass Welded Assembly (ME-390529).

Technician(s) _____ Date 4/5/05

11.3 Level the IP End Dome (MD-390221) using the Ball Socket (MD-369777) and the Mini Level.

Technician(s) _____ Date 4/5/05

11.4 Mark the IP End Dome (MD-390221) and the End Plate with a Horizontal Witness Line. This Step will be used in Step 13.3 to reposition the Domes prior to Welding.

Technician(s) _____ Date 4/5/05

11.5 Remove the IP End Dome (MD-390221) from the Tooling.

Technician(s) _____ Date 4/5/05

11.6 Attach Non-IP End Dome (MD- 390668) (Q3) to the End Dome Positioning Fixture (MD-369776).

Technician(s) _____ Date 4/11/05

11.7 Align Non-IP End Dome (MD- 390668) as shown in Q3 Cold Mass Welded Assembly (ME-390529).

Technician(s) _____ Date 4/11/05

11.8 Level the Non-IP End Dome (MD- 390668) using the Ball Socket (MD-369777) and the Mini Level.

Technician(s) _____ Date 4/11/05

11.9 Feed the Electrical wires/bus through the proper ports as the Non-IP End Dome (MD- 390668) is brought into position against the End Plate.

Technician(s) _____ Date 4/11/05

11.10 Mark the Non-IP End Dome (MD- 390668) and the End Plate with a Horizontal Witness Line. This Step will be used in Step 18.6 to reposition the Extension Tubes prior to Welding.

Technician(s) _____ Date 4/11/05

11.11 Remove the Non-IP End Dome (MD- 390668) from the Tooling.

Technician(s) _____ Date 4/11/05

11.12 Perform preliminary reference measurements before moving the Cold Mass to an Assembly Table.

Check one (Upper / Lower slash) and then record the reference measurement and Mini-level No.

**Upper Slash** ☐

**Lower Slash** ☑

**Take measurement while looking from Non-Lead End toward the Lead End.**

**Reference Measurement:** 137

**Mini-level No.** 2

Technician(s) _____ Date 5-20-05

Responsible Authority/Physicist _____ Date 5/20/05

11.13 Move the Cold Mass to an Assembly Table.

Technician(s) _____ Date 5-20-05

12.0 Splicing the Power Leads

12.1 At the IP End, set up the Power Leads for splicing as shown in the Q3 Module Assembly Drawing (ME-369900).

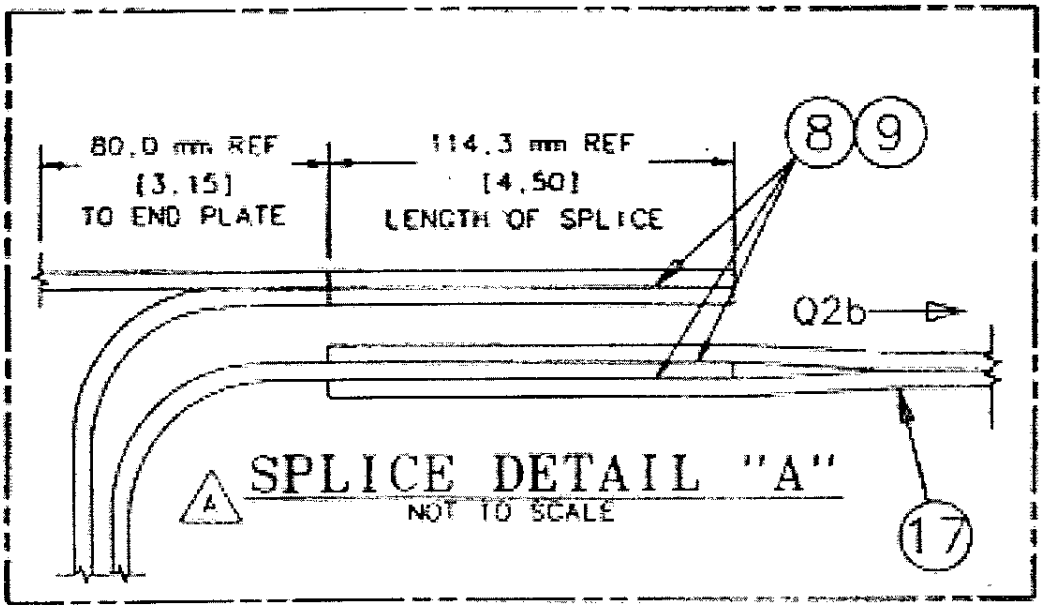


**Figure 12.1-A**
**(ME-369900 - Rev. A, Sheet 3 of 5)**

Technician(s) _____ Date 3/24/05

12.2 Construct / Obtain Expansion Loop Tail per Q3 Module Assembly Insulated Expansion Loop Tail (MB-430145).

Technician(s) _____ Date 3/24/05

12.3 Solder the Lower Lead to the expansion Loop Tail from Step 8.2 as per Q3 Module Assembly Drawing (ME-369900).

Technician(s) _____ Date 3/24/05

12.4 Solder the Upper Magnet Lead (Terminal "A", Quadrant 4) to the Lower 8kA Bus as per Q3 Module Assembly Drawing (ME-369900).

Technician(s) _____ Date 3/24/05

12.5 Insulate each splice with 2/3 overlap, .002 x 3/8 wide Kapton, (MA-292722).

Technician(s) _____ Date 3/24/05

12.6 Insert a piece of .005 Kapton between splices.

Technician(s) _____ Date 3/24/05

12.7 Put splices together and insulate splice area with ¾ overlap, .002 x 3/8 wide Kapton (MA-292722).

Technician(s) _____ Date 3/24/05

12.8 Attach Q3 Bus Splice Clamp Assembly (MD-430031) to Q3 Lead as per Q3 Module Assembly (ME-369900).

Technician(s) _____ Date 3/24/05

DR HGQ0545 (41731)

12.9 Attach IP (Lead) End Buss Crossover Block Assembly (MD-430095) as per Q3 Module Assembly (ME-369900).

Technician(s) _____ Date 3/24/05

? 12.10 Attach Cable Clamp Assemblies as per Q3 Module Assembly (ME-369900).

Technician(s) _____ Date 3/24/05

Have step twice 8.4 12.11 Solder MQSX Corrector Wires.

TRR#1751

Technician(s) _____ Date 4/13/05

12.12 Route Cable and Corrector Leads on IP (Lead) End as shown below and per Q3 Module Assembly (ME-369900).

## Lead Bus Orientation through Q3

R. Bossert 3-29-04

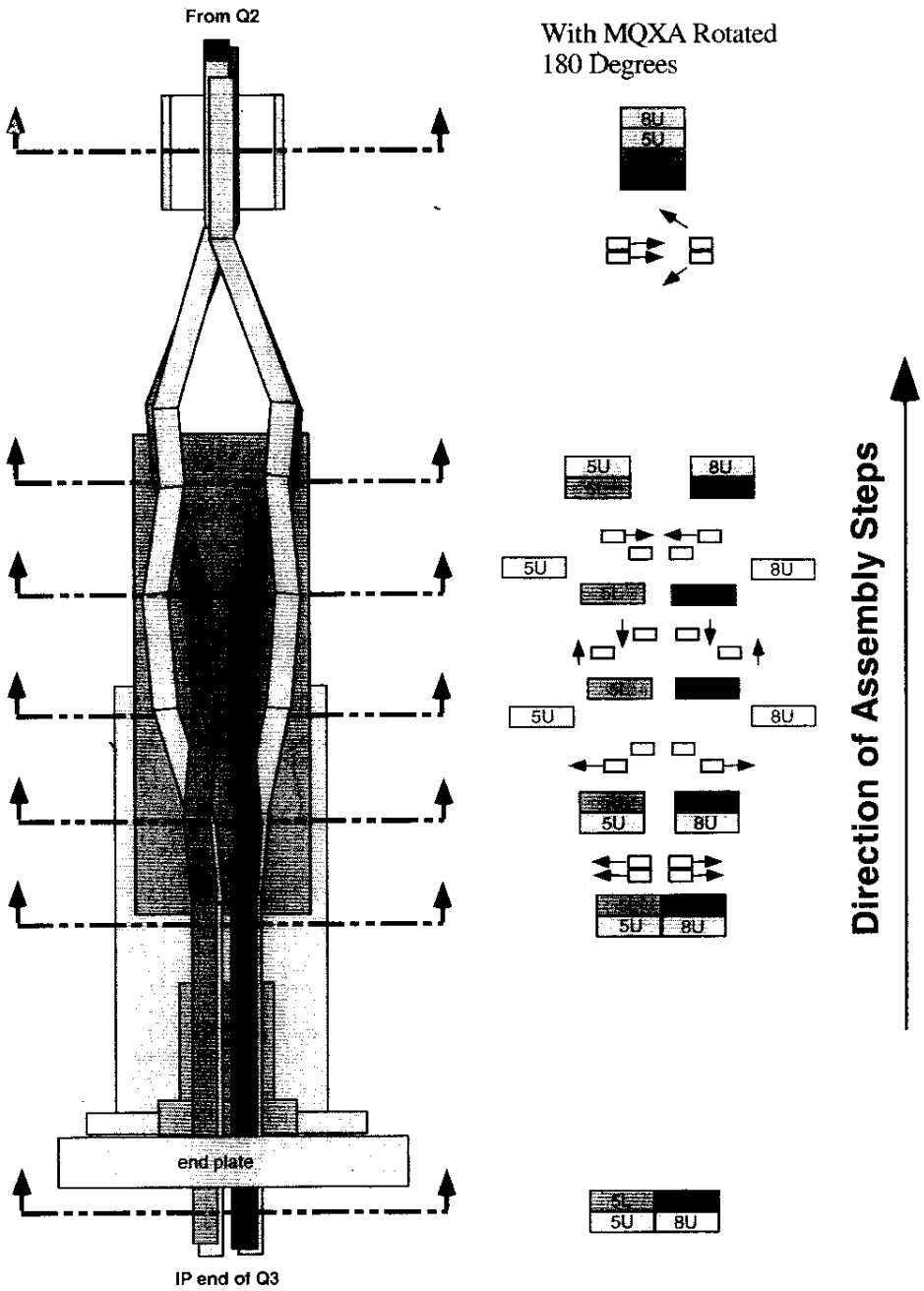


**Figure 12.12-A**

Technician(s) _____ Date 4/13/05

12.13 At the IP End, attach Spider Assembly (MD-430072) as per Q3 Module Assembly (ME-369900).

Technician(s) _____ Date 4/27/05

12.14 Attach Non-IP End Bus Crossover Block Assembly (MD-430081) as per Q3 Module Assembly (ME-369900).

Technician(s) _____ Date 4/26/05

13.0 Configure MCSOX Corrector Coil Wires

13.1 Attach the MCSOX Splice Plate Mounting Ring (ME-430129), the MCSOX Corrector Splice Face Plate (ME-430130), and the MCSOX Splice Plate Mounting Bars (ME-430128) as per Q3 Module Assembly (ME-369900).

Technician(s) _____ Date 4/26/05

13.2 Route wires as shown in figure below and per Q3 Module Assembly (ME-369900).

Technician(s) _____ Date 4/26/05

13.3 Solder Wires per Q3 Module Assembly (ME-369900) and Figure 13.0. (Next Page)

Technician(s) _____ Date 4/26/05

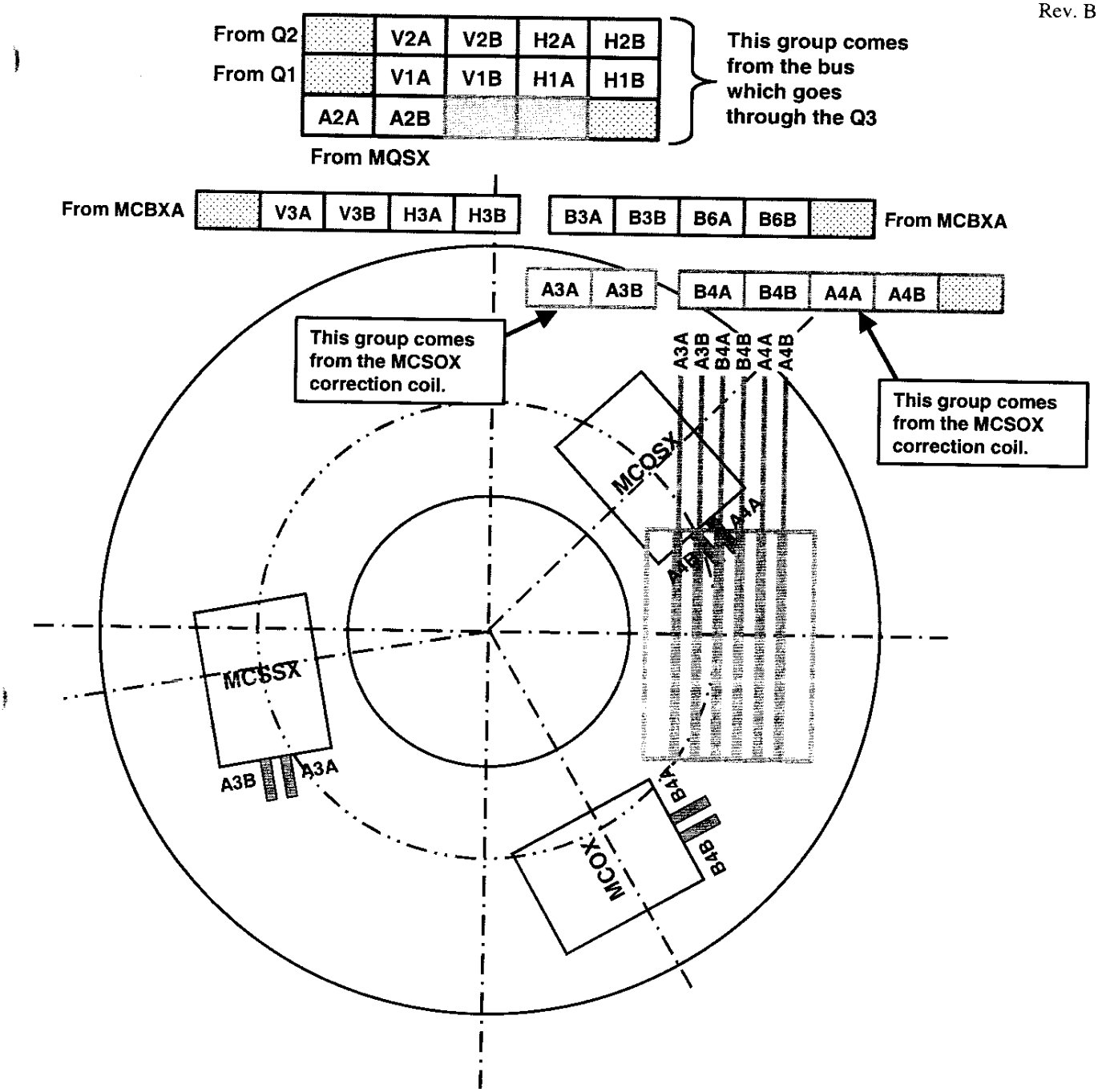


| | | | | | | | | | | |
|---|---|---|---|---|---|---|---|---|---|---|
| MCBXA | | V3A | V3B | H3A | H3B | B3A | B3B | B6A | B6B | |
| Q2 | | V2A | V2B | H2A | H2B | B4A | B4B | A4A | A4B | |
| Q1 | | V1A | V1B | H1A | H1B | A2A | A2B | A3A | A3B | |

MQSX

MCBXA

This shows the corrector bus in it's final position as it enters the DFBX

## Looking into Non-IP End of Q3

Looking into end of correction coil from DFBX into Q3

# Figure 13.0-A

14.0 Mount MCSOX Bus and Expansion Loop Hardware

14.1 Mount the Side Cable Clamp Assembly (ME-430103) as per Q3 Module Assembly (ME-369900).

Technician(s) _____ Date 4/13/05

14.2 Mount the Non-IP (Non-Lead End) Corrector Bus Bundle Bracket (ME-430134) as per Q3 Module Assembly (ME-369900).

Technician(s) _____ Date 4/26/05

15.0 Assemble Bus and Expansion Loop on Non-IP (Non-Lead) End

15.1 Route Non-IP End cables into crossover assembly on Non-IP End as shown in figure 15.1-A.

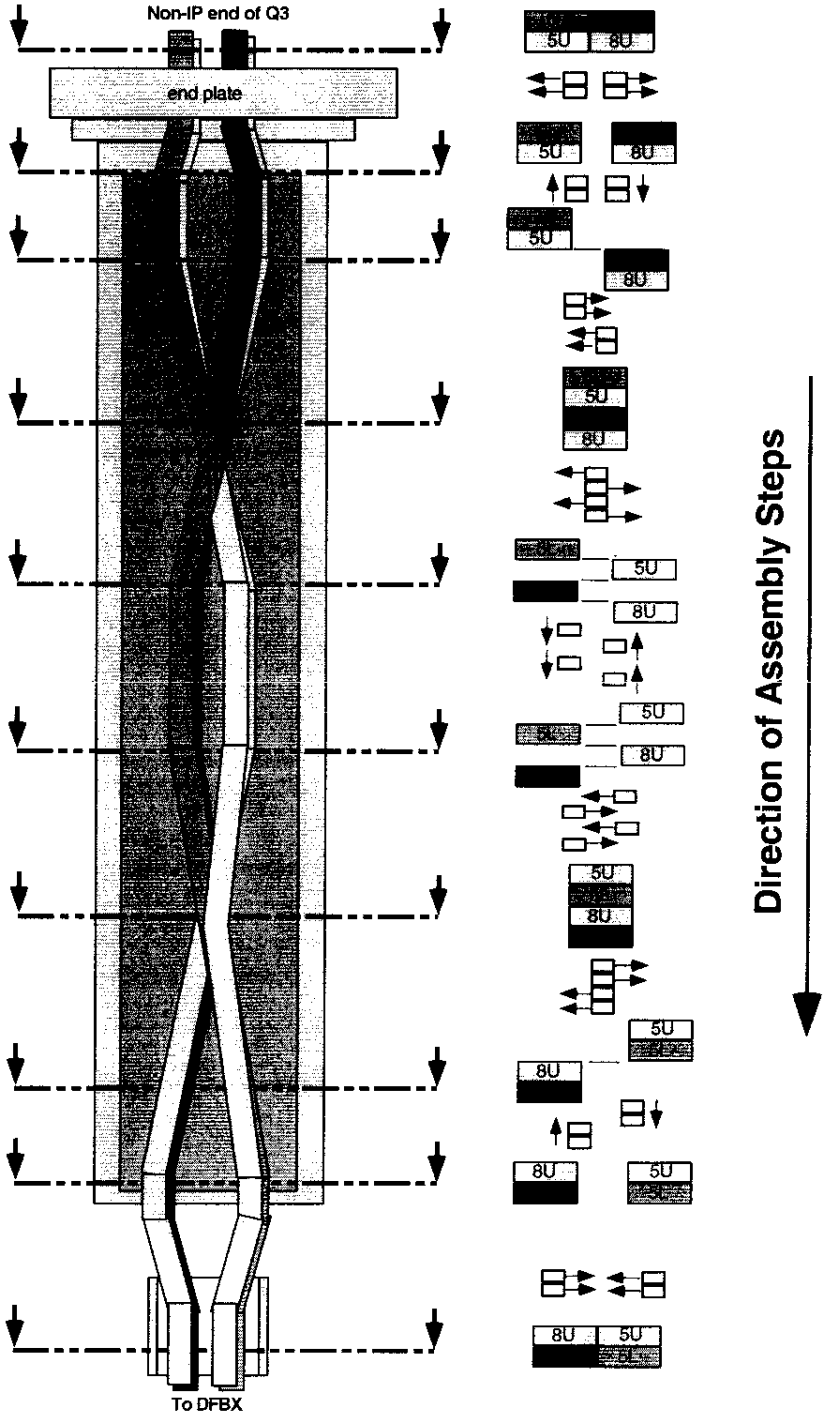


**Figure 15.1-A**

Technician(s) _____ Date 4/18/05

15.2 Configure Bus Expansion Loop as per Q3 Module Assembly (ME-369900).

Technician(s) _____ Date 4/27/05

15.3 At the Non-IP End, attach Spider Assembly (MB-430096) as per Q3 Module Assembly (ME-369900).

Technician(s) _____ Date 4/27/05

16.0 Electrical Inspection

16.1 Perform an electrical inspection on each of the Individual Quadrants and the Cold Mass. Refer to the Valhalla and Leader Free Standing Coil Measurement Procedure (ES-292306).

**To measure the Resistance of a Q3 Cold Mass:**

1. Use Valhalla Scientific 4300B digital micro-ohmmeter.
2. Set Test Current to 0.1 amp.
3. Set Scale to 2V full scale.
4. Turn temperature compensation on.
5. Turn test current off.
6. Connect $I_{HI}$ to "A" Lead as shown in figure 16.1-A.
7. Connect $I_{LO}$ to "B" Lead as shown in figure 16.1-A.
8. Turn test current on.
9. Connect $V_{HI}$ and $V_{LO}$ to voltage taps as shown in resistance table.
10. To measure Total with leads, connect $V_{HI}$ to "A" Lead and $V_{LO}$ to "B" Lead.
11. At the IP End, jumper the 8Ka leads as shown in Figure 16.1-A.
12. Read resistance and record in traveler.

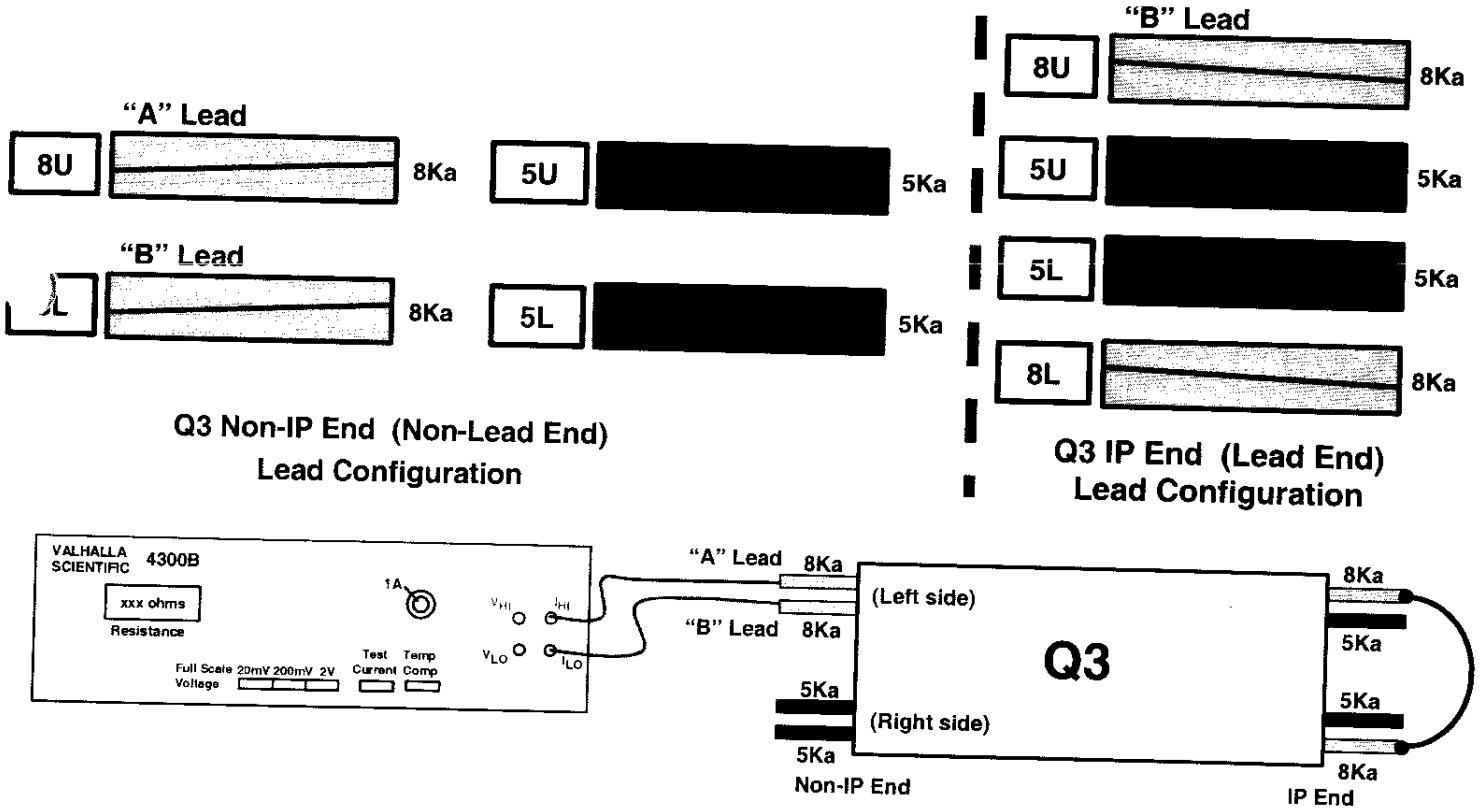


**Figure 16.1-A**

| (Q3) Resistance | | | | Nominal 3.35 to 3.45 Ω |
|---|---|---|---|---|
| Voltage Tap Serial Numbers | | | | Total Resistance |
| Connect | Fermi | CERN | KEK | |
| $V_{HI}$ | VTa1Q3 | EE1113 | a1 | 3.402 Ω |
| $V_{LO}$ | VTc1Q3 | EE1213 | c1 | |
| $V_{HI}$ | VTc1Q3 | EE1213 | c1 | 3.403 Ω |
| $V_{LO}$ | VTb1Q3 | EE1313 | b1 | |
| $V_{HI}$ | VTa1Q3 | EE1113 | a1 | 6.806 Ω |
| $V_{LO}$ | VTb1Q3 | EE1313 | b1 | |

| | | Total Resistance with Leads |
|---|---|---|
| | | Nominal 6.75 to 6.85 Ω |
| $V_{HI}$ | Q4 Power Lead | 6.871 Ω |
| $V_{LO}$ | Q3 Power Lead | |

Technician(s) _____ Date 5/3/05

Check resistance of Redundant Voltage Taps.

| Q3 Redundant Voltage Taps | | | | Nominal 3.35 to 3.45 Ω |
|---|---|---|---|---|
| Connect | Fermi | CERN | KEK | Resistance |
| $V_{HI}$ | VTa2Q3 | EE1123 | a2 | 3.404 Ω |
| $V_{LO}$ | VTc2Q3 | EE1223 | c2 | |
| $V_{HI}$ | VTc2Q3 | EE1223 | c2 | 3.406 Ω |
| $V_{LO}$ | VTb2Q3 | EE1323 | b2 | |

Technician(s) _____ Date 5/3/05

**To measure Ls and Q of a Q3 Cold Mass:**

1. Use Agilent 4263B LCR Meter.
2. Turn power on by pushing line button. Wait 30 seconds until display screen is lit.
3. Recall program #1. To do this, push recall (Rcl), then push #1, then push Enter.
4. Push Auto/Hold button to release hold.
5. Verify that the frequency displayed in the upper right corner of the display screen is 1000 Hz and the level recorded in the lower right corner of the display screen is 1V or 1000 mV.
6. Connect $H_{cur}$ to "A" power lead as shown in figure 16.1-B.
7. Connect $L_{cur}$ to "B" power lead as shown in figure 16.1-B.
8. Connect $H_{pot}$ and $L_{pot}$ buttons to voltage taps as shown below.
9. Read Ls and Q from display and record in table.

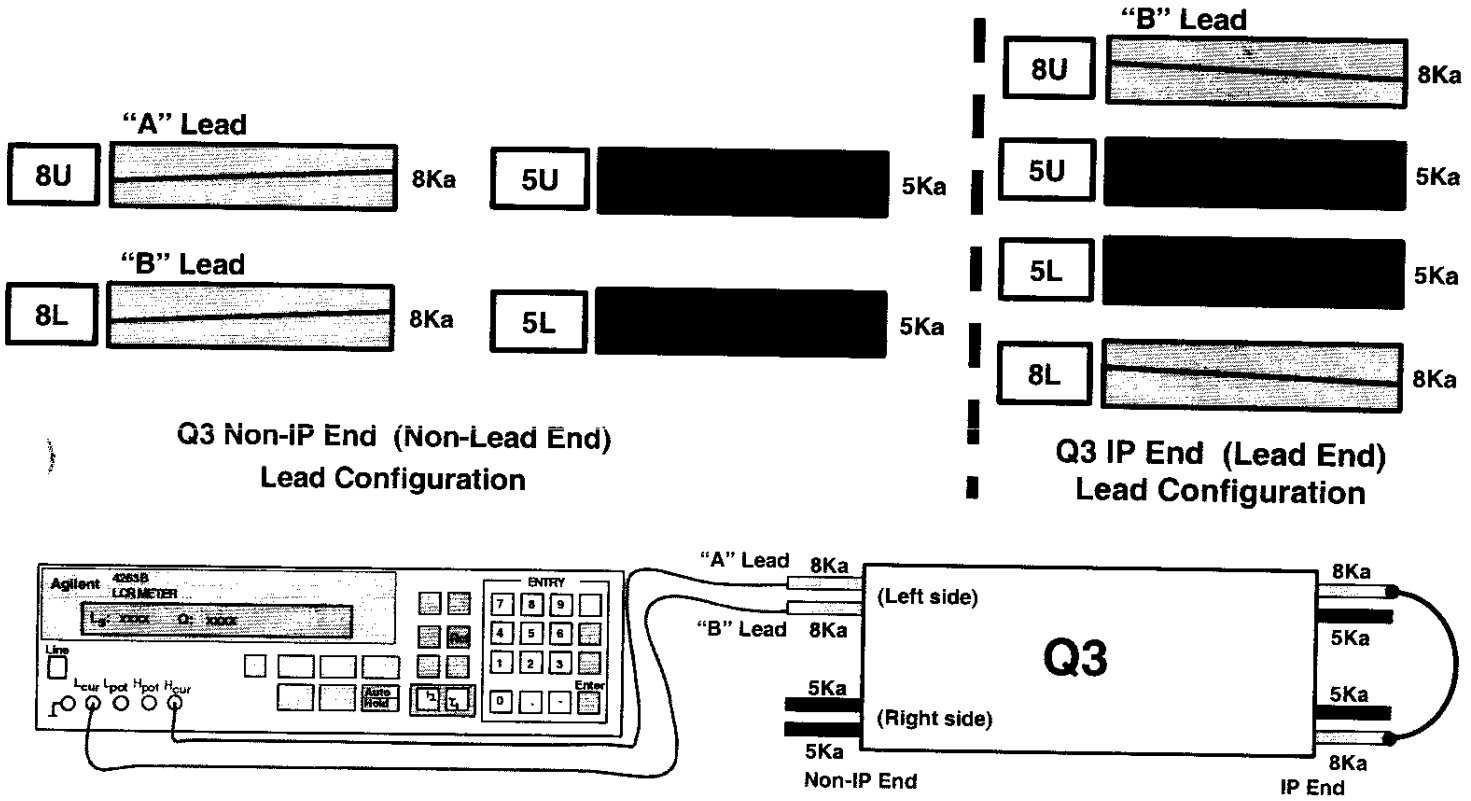


# Figure 16.1-B

| (Q3) Inductance | | | | Nominal 15 to 16 mH |
|---|---|---|---|---|
| Voltage Tap Serial Numbers | | | | Total Inductance |
| Connect | Fermi | CERN | KEK | |
| $H_{POT}$ | VTa1Q3 | EE1113 | a1 | 16 mH |
| $L_{POT}$ | VTc1Q3 | EE1213 | c1 | |
| $H_{POT}$ | VTc1Q3 | EE1213 | c1 | 15.901 mH |
| $L_{POT}$ | VTb1Q3 | EE1313 | b1 | |

| | | | | Nominal 30 to 32 mH |
|---|---|---|---|---|
| | | | | Total Inductance |
| $H_{POT}$ | VTa1Q3 | EE1113 | a1 | 31.894 mH |
| $L_{POT}$ | VTb1Q3 | EE1313 | b1 | |

| (Q3) Q-Factor | | | | Nominal 1.0 to 1.2 |
|---|---|---|---|---|
| Voltage Tap Serial Numbers | | | | Total Q |
| Connect | Fermi | CERN | KEK | |
| $H_{POT}$ | VTa1Q3 | EE1113 | a1 | 1.2 |
| $L_{POT}$ | VTc1Q3 | EE1213 | c1 | |
| $H_{POT}$ | VTc1Q3 | EE1213 | c1 | 1.2 |
| $L_{POT}$ | VTb1Q3 | EE1313 | b1 | |

| | | | | Nominal 1.0 to 1.2 |
|---|---|---|---|---|
| | | | | Total Inductance |
| $H_{POT}$ | VTa1Q3 | EE1113 | a1 | 1.2 |
| $L_{POT}$ | VTb1Q3 | EE1313 | b1 | |

Technician(s)

5/3/05
Date

**To measure the resistance of a Thermometer (RTD):**

1. Use Hewlett Packard HP3457A digital multimeter.
2. Record temperature of building within +/- 5 degrees.
3. Press line button to turn line on.
4. Connect wires as shown in Figure below.
   U+ (Black) to Sense HI
   I+ (Yellow) to Input HI
   U- (Red) to Sense LO
   I- (Green) to Input LO
5. Push blue button (function key) once.
6. Push OHMF button.
7. Verify arrow in readout is above the 4WΩ (meaning a 4 wire resistance measurement).
8. Read resistance in ohms and record in traveler.

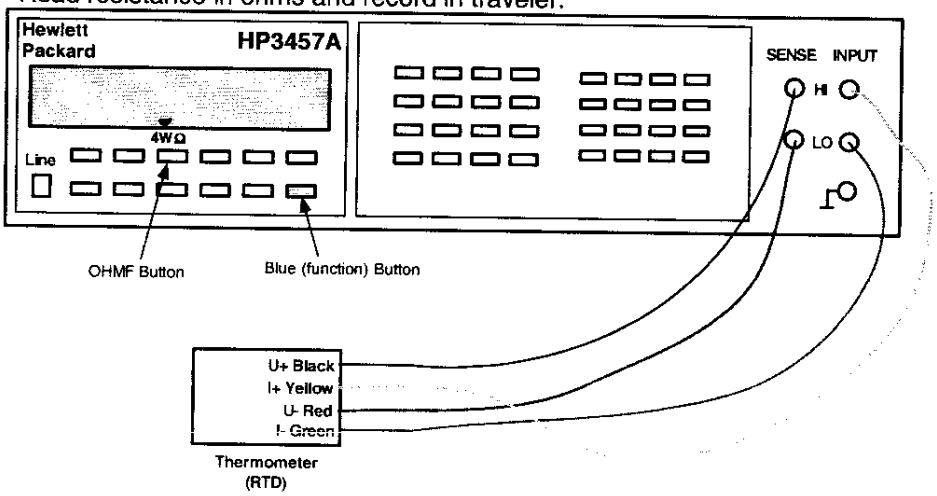


**To measure the resistance of a Cryogenic (Warm-up) Heater**

1. Use Hewlett Packard HP3457A digital multimeter.
2. Record temperature of building within +/- 5 degrees.
3. Press line button to turn line on.
4. Connect wires as shown in Figure below.
5. Push blue button (function key) once.
6. Push OHMF button.
7. Verify arrow in readout is above the 4WΩ (meaning a 4 wire resistance measurement).
   **Note: Although this is technically a 4 wire measurement, it is effectively a 2 wire measurement, since there are only 2 wires connected to each heater.**
8. Read resistance in ohms and record in traveler.

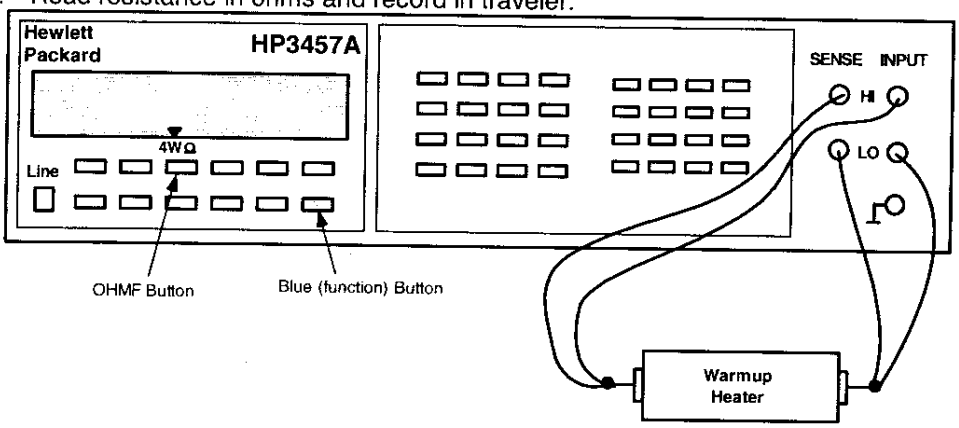

| Q3 - RTD's and Cryogenic (warm-up) Heaters | | | | |
|---|---|---|---|---|
| Temperature of Building (± 5°): 68° F | | | | |
| **Component** | **Fermi** | **CERN** | **Range** | **Resistance** |
| Q3 RTD, primary | TaQ3 | TT8313 | **60 to 70 Ω** | 64.876 Ω |
| Q3 RTD, redundant | TbQ3 | TT8323 | **60 to 70 Ω** | 66.452 Ω |
| Q3 Cryogenic (warm-up) Heater (LE) - wire at top (CERN #1 I+) | W1aQ3 | EH8313+ | **16 to 18.5 Ω** | 16.597 Ω |
| Q3 Cryogenic (warm-up) Heater (LE) - wire at bottom (CERN #1 I-) | W2aQ3 | EH8313- | | |
| Q3 Cryogenic (warm-up) Heater (Non-LE) - wire at top (CERN #2 I+) | W1bQ3 | EH8323+ | **16 to 18.5 Ω** | 16.2 Ω |
| Q3 Cryogenic (warm-up) Heater (Non-LE) - wire at bottom (CERN #2 I-) | W2bQ3 | EH8323- | | |

Technician(s) _____ Date 5/3/05

Using the Hewlett Packard HP3457A digital multimeter, measure the Protection (Strip) Heater Resistance for Q3.

| Q3 Protection (Strip) Heater Resistance | | | | | |
|---|---|---|---|---|---|
| **Fermi** | **CERN** | **KEK** | **Description** | **Limit** | **Resistance** |
| **H1aQ3** | **YT1113+** | **HA1** | **Circuit A** | **28 to 32 Ω** | 29.040 Ω |
| **H2aQ3** | **YT1113-** | **HA2** | | | |
| **H1bQ3** | **YT1123+** | **HB1** | **Circuit B** | **28 to 32 Ω** | 29.089 Ω |
| **H2bQ3** | **YT1123-** | **HB2** | | | |

Technician(s) _____ Date 5/3/05

16.2 Using the Valhalla 4300B, connect 10mA applied voltage thru the corrector Power Leads. Measure Resistance and record in the table below. Record Initial resistance of Corrector Element and record below.

**Corrector Bus Leads**

| | | | | | | | | | |
|---|---|---|---|---|---|---|---|---|---|
| | V3A | V3B | H3A | H3B | B3A | B3B | B6A | B6B | |
| | V2A | V2B | H2A | H2B | B4A | B4B | A4A | A4B | |
| | V1A | V1B | H1A | H1B | A2A | A2B | A3A | A3B | |

**(View Looking from DFBX into Q3)**

| Corrector Assembly | Corrector Element | Readout Labels | | Power Labels $I_{HI}$ | Power Labels $I_{LO}$ | Resistance | Initial Resistance |
|---|---|---|---|---|---|---|---|
| MQSX | MQSX | A2A | EE8223 | A2A | A2B | .06 | MQSX |
| | | EE8223 | A2B | | | 7.63 | |
| | | A2A | A2B | | | 7.69 | |
| MCBXA | MCBXV | V3A | EE8113 | V3A | V3B | .02 | MCBXV |
| | | EE8113 | V3B | | | 17.49 | |
| | | V3A | V3B | | | 17.50 | |
| | MCBXH | H3A | EE8123 | H3A | H3B | .01 | MCBXH |
| | | EE8123 | H3B | | | 21.48 | |
| | | H3A | H3B | | | 21.49 | |
| | MCTX | B6A | EE8613 | B6A | B6B | .02 | MCTX |
| | | EE8613 | B6B | | | 98.34 | |
| | | B6A | B6B | | | 98.35 | |
| | MCSX | B3A | EE8313 | B3A | B3B | .02 | MCSX |
| | | EE8313 | B3B | | | 27.87 | |
| | | B3A | B3B | | | 27.88 | |
| MCSOX | MCOSX | A4A | EE8423 | A4A | A4B | .01 | MCOSX |
| | | EE8423 | A4B | | | 11.61 | |
| | | A4A | A4B | | | 11.62 | |
| | MCOX | B4A | EE8413 | B4A | B4B | .01 | MCOX |
| | | EE8413 | B4B | | | 12.77 | |
| | | B4A | B4B | | | 12.78 | |
| | MCSSX | A3A | EE8323 | A3A | A3B | .01 | MCSSX |
| | | EE8323 | A3B | | | 13.23 | |
| | | A3A | A3B | | | 13.24 | |

Technician(s) _____ Date 5/3/05

16.3 Attach Backing Splines as per Q3 Module Assembly (ME-369900).

Technician(s) _____ Date 5/3/05

16.4 At the IP End (Lead End) wrap the Springboard Assemblies in Kapton and then wrap with Kevlar String (MA-369912) every ½ - ¾" over Kapton as per Q3 Module Assembly (ME-369900).

Technician(s) _____ Date 5/3/05

16.5 At the Non-IP End (Non-Lead End) wrap the Springboard Assemblies in Kapton and then wrap with Kevlar String (MA-369912) every ½ - ¾" over Kapton as per Q3 Module Assembly (ME-369900).

Technician(s) _____ Date 5/3/05

17.0 Beam Tube Insertion

17.1 Inspect the Beam Tube (MC-369522) for damage. Clean Beam Tube using lint free Heavy Duty Wipers (Fermi stock 1660-0150) and Isopropyl Alcohol (Fermi stock 1920-0300) as per Insulated Beam Tube Assembly for Q3 (MD-369838).

Technician(s) _____ Date 5/4/05

17.2 Using Insertion Tooling, insert the Beam Tube (MC-369522) into the Magnet Assembly as per Beam Tube Insertion Tooling (MD-369789).

Technician(s) _____ Date 5/4/05

17.4 Place a mark 45mm from the Kapton insulation on Non-IP End of the Beam Tube.

Technician(s) _____ Date 5/4/05

STOP

17.5 Verify that the placement of the mark in Step 17.4 is correct.

Crew Chief _____ Date 5/4/05

17.6 Using the Wachs Cutter, cut the Non-IP End of the Beam Tube at the mark.

Technician(s) _____ Date 5/4/05

17.7 Measure the inside Beam Tube length and record this measurement below.

8889

| Step | Description | Measurement |
|---|---|---|
| 17.7.1 | Beam Tube Length | 8889 |
| | Subtract 8650mm (±2mm) | - 8650mm |
| 17.7.2 | (Length to be cut from IP End) | = 239 |

Technician(s) _____ Date 5/4/05

17.8 Using the number recorded in Step 17.7.2, measure and place a mark at the IP End of the Beam Tube.

Technician(s) _____ Date 5/4/05

17.9 Verify that the placement of the mark in Step 17.8 is correct.

STOP

Crew Chief _____ Date 5-4-05

17.10 Using the Wachs Cutter, cut the IP End of the Beam Tube at the mark.

Technician(s) _____ Date 5/4/05

17.11 Measure and verify Beam Tube length is 8650 (±2mm). Record Actual Beam Tube Length below.

| Actual Beam Tube Length | 8650 |
|---|---|

Technician(s) _____ Date 5/4/05

STOP

Responsible Authority/Physicist _____ Date 5/4/05

17.12 Hipot the Beam Tube to coil, heaters and ground. (5kV) (Max. Leakage < 0.5μA)

STOP

**Have Crew Chief verify setup and sign below before continuing.**

Crew Chief _____ Date 5-4-05

| Hipot | Leakage or Failure Voltage | Pass | Fail |
|---|---|---|---|
| Beam Tube to coil, heaters and ground | 12 nA | X | |

Technician(s) _____ Date 5/4/05

STOP

Responsible Authority/Physicist _____ Date 5-5-05

18.0 Dome Installation

18.1 Tack weld the corrector mounting hardware in place as per Q3 Cold Mass Welded Assembly (ME-390529).

Weldor(s) _____ Date 5/4/05

18.2 Mount and adjust the Shipping restraint screws.

**Note(s):**

**Weld to corrector if necessary.**

Technician(s) _____ Date 5/6/05

18.3 Reposition the IP End Dome as shown in Q3 Cold Mass Welded Assembly (ME-390529) using the Horizontal Witness Line from step 11.4.

Technician(s) _____ Date 5/6/05

18.4 Tack weld the IP End Dome in place at approximately 6-8 places around the Dome per Q3 Cold Mass Welded Assembly (ME-390529).

Weldor(s) _____ Date 5/5/05

18.5 Ensure Spider Assembly (MB-430096) is installed properly as per Q3 Module Assembly (ME-369900).

Responsible Authority _____ Date 5-5-05

18.6 Weld the IP End Dome, skip weld around to minimize distortion per Q3 Cold Mass Welded Assembly (ME-390529).

Weldor(s) _____ Date 5/5/05

18.7 Reposition the Non-IP End Extension Tube as shown in Q3 Cold Mass Welded Assembly (ME-390529) using the Horizontal Witness Line from step 11.10.

Technician(s) _____ Date 5/5/05

18.8 Tack weld the Extension Tube (MD-390667) to the Cold Mass per (ME-390529).

Weldor(s) _____ Date 5/5/05

18.9 Verify that the Expansion Loop has not been damaged and is functioning properly.

Technician(s) _____ Date 5/5/05

18.10 Reposition the Non-IP End Extension Tube while feeding the Electrical wires/Bus through the proper ports as the Non-IP End Extension Tube is brought into position against the End Plate.

Technician(s) _____ Date 5/5/05

18.11 Tack weld the Non-IP End Dome in place at approximately 6-8 places around the Dome as per Q3 Cold Mass Welded Assembly (ME-390529).

Weldor(s) _____ Date 5/5/05

18.12 Verify that the Spider Assembly (MB-430096) has not been damaged and is functioning properly.

Technician(s) _____ Date 5/5/05

18.13 Weld the Extension Tube (MD-390667) to the Cold Mass per (ME-390529).

Weldor(s) _____ Date 5/6/05

18.14 Weld the Non-IP End Dome, skip weld around to minimize distortion as per Q3 Cold Mass Welded Assembly (ME-390529).

Weldor(s) _____ Date 5/6/05

19.0 Suspension System Assembly

19.1 Clean the Suspension System with Ethyl Alcohol (Fermi stock 1920-0550) and Kimwipes (Fermi stock 1660-2500) or equivalent.

| Part Name | Part Number | Quantity | Completed |
|---|---|---|---|
| **Fixed Support Assembly** | **(ME-390041)** | **1** | — |
| **Sliding Support Assembly** | **(ME-390042)** | **1** | — |
| **Tie Bar Assembly** | **(ME-390400)** | **2** | ✓ |
| **Tie Bar Shim, 6.4mm (.250")** | **(ME-390118)** | **4** | ✓ |
| **Tie Bar Shim, 2.4mm (.093")** | **(ME-390119)** | **4** | ✓ |
| **Tie Bar Shim, 0.8mm (.031")** | **(ME-390120)** | **4** | ✓ |
| **Suspension System Adjusting Screw** | **(MB-390039)** | **8** | ✓ |
| **M16 x 70mm SHCS** | **(MA-393021)** | **8** | ✓ |
| **Washer (.656" ID x 1.38" OD x .13" THK STN STEEL)** | **(MA-390377)** | **8** | ✓ |

Label the IP End and the Non-IP End of the Vacuum Vessel with a temporary sticker or equivalent.

O. Fuiza
Technician(s)

5 12 05
Date

19.2 Insert the Fixed Support Assembly (ME-390041) into the Vacuum Vessel and position at the IP End.

O. Fuiza
Technician(s)

5 12 05
Date

19.3 Install the Suspension System Adjusting Screws (MB-390039) and Washer (MA-390377) into the Vacuum Vessel to hold the Fixed Support Assembly in place. Coat all screw threads with Molybdenum Disulfide prior to installation.

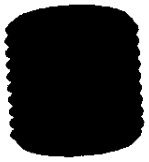

O. Fri
Technician(s)

5 12 05
Date

19.4 Adjust the Vertical and rotational alignment of the Supports using the Suspension System Adjusting Screws (MB-390039). Ensure all four screws are in contact with the Support and that Diametrically Opposing Support Lugs are equidistant from the Vacuum Vessel Wall.

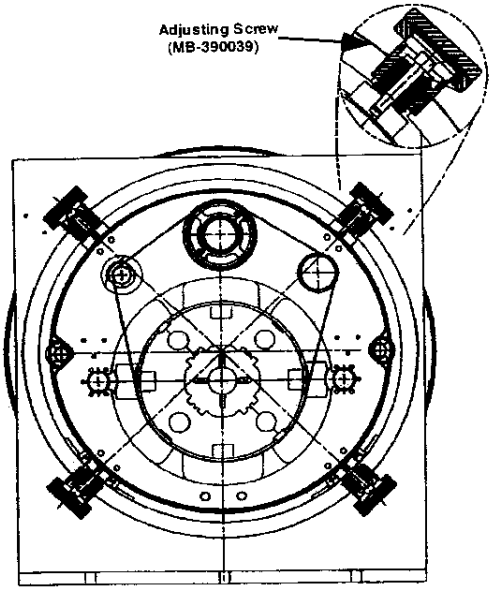


O. Fri
Technician(s)

5 12 05
Date

19.5 Insert the Sliding Support Assembly (ME-390042) in to the Vacuum Vessel and position at the Non-IP End.

O. Fri
Technician(s)

5 12 05
Date

19.6 Install the Suspension System Adjusting Screws (MB-390039) and Washer (MA-390377) into the Vacuum Vessel to hold the Fixed Support Assembly in place. Coat all screw threads with Molybdenum disulfide prior to installation.

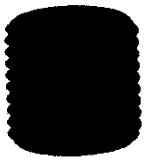

O. Fria
Technician(s)

5 12 05
Date

19.7 Adjust the Vertical and rotational alignment of the Supports using the Suspension System Adjusting Screws (MB-390039). Ensure all four screws are in contact with the Support and that Diametrically Opposing Support Lugs are equidistant from the Vacuum Vessel Wall.

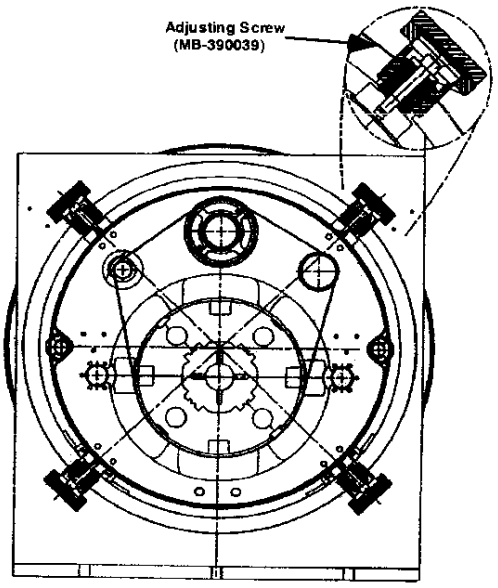


O. Fria
Technician(s)

5 12 05
Date

19.8 Assemble the Suspension System using the Fixed Support Assembly (ME-390041), the Sliding Support Assemblies (ME-390042) and the Tie Bar Assemblies (MC-390167). Insert Tie Bar Shims (MC-390118), (MB-390119) and (MB-390120) between the Sliding Support Assemblies (ME-390042) and the Tie Bar Assemblies (MC-390400) as required.
(Reference drawing: ME-390525).

Technician(s) C. Friary Date 5 12 05

19.9 Measure the distance between the Suspension Rings at the bottom of the Threaded Rods and record measurements below. Copy this page and place copy in designated book for later reference. (TR-333730, Q3 Cryostat Final Assembly, Step 5.1).

**Non-IP North to IP North** 4415 MM

**Non-IP South to IP South** 4415 MM

Technician(s) Date 5/12/05

19.10 Measure from the face of the IP end vacuum vessel flange to the inside surface of the IP end suspension system.

**Record measurement here:** 2009 ~~2016~~ mm

Technician(s) C. Friary Date 5 12 05

19.11 Measure from the face of the Non-IP end vacuum vessel flange to the inside surface of the Non-IP end suspension system.

**Record measurement here:** 2009 MM

Technician(s) C. Friary Date 5 12 05

19.12 Label the IP End Support and the Non-IP End Support.
(Writing on the G-11 Support is acceptable).

Technician(s) C. Friary Date 5 12 05

19.13 Loosen each Suspension System Adjusting Screw (MB-390039) 1/2 turn and remove the Suspension System from the Vacuum Vessel.

Technician(s) C. Friary Date 5/12/05

19.14 Configure the Suspension Tooling for Q3 Assembly per Cryostat Layout Tooling & Assembly (ME-364604). Place Suspension Assembly on the tooling and make necessary adjustments to the tooling.

Technician(s) C. Friary Date 5/13/05

19.15 Assemble the Suspension Mounting Brackets (MD-390279) to the Support Assemblies.

Technician(s) _____ Date 5/13/05

19.16 Slide the Suspension System over the Cold Mass and place on tooling. The Suspension system may be disassembled during this step. Record shim sizes and locations prior to disassembly.

**Note(s):**

**Ensure that the Suspension System is configured properly to the Cold Mass with respect to the IP and Non-IP Ends.**

Technician(s) _____ Date 5/13/05

STOP

19.17 Verify locking collars exist only at IP End support.

Crew Chief _____ Date 5-13-05

19.18 Establish alignment between the Cold Mass and the Support system. Install shims between the Brass Slide Bars and the Stainless Steel Blocks on each support as needed.

Record Shim size and location below.

**East-North** .055 **East South** .050

**West-North** .055 **West-South** .065

Technician(s) _____ Date 5 13 05

STOP

19.19 Verify the Alignment of the Cold Mass and the Support System.

Crew Chief _____ Date 5-13-05

19.20 Weld the Cold Mass to the Outboard Cold Mass Brackets (MB-430082) as per Q3 Module Assembly (ME-390900).

Weldor(s) _____ Date 5/14/05

19.22 Add 112.5mm to the number recorded in Step 19.10 and record below.

**Recorded measurement from Step 19.10:** ~~2016~~ 2009

**Add:** + **112.5 mm**

**Record New Total:** ~~2128.5~~ 2121.5

Technician(s) Date 5-14-05

19.23 Add 337.5mm to the number recorded in Step 19.11 and record below.

**Recorded Measurement from Step 19.11:** 2009

**Add:** + **337.5 mm**

**Record New Total:** 2346.5

Technician(s) Date 5-14-05

19.24 Position the IP End of the Beam Tube at the distance recorded in Step 19.22 from the inside surface of the IP G-10 support.

Technician(s) Date 5-16-05

19.25 Measure the Non-IP End of the Beam Tube from the inside surface of the Non-IP End support. Compare this number to the number recorded in Step 19.23.

TR HGQ0571 (4211)

**Note(s):**
**These numbers should be the same to within 1 mm. If these numbers differ greater than 1 mm, contact Responsible Authority/Physicist.**

**Record measurement here:** 2345.5

**Recorded measurement from Step 19.23:** 2346.5

Technician(s) Date 5-16-05

19.26 Measure from the IP End of the Beam Tube to the Spot Face on the IP End Dome. Record below.

**Record measurement here:** 15mm

Technician(s) Date 5-16-05

19.27 Subtract 15mm from the number recorded in Step 19.26. This is the Spacer width for the IP End. Record below.

**Recorded Measurement from Step 19.26:** 15

**Subtract:** **- 15mm**

**Spacer width for the IP End:** Ø

Technician(s) Date 5-16-05

19.28 Measure from the Non-IP End of the Beam Tube to the Spot Face on the Non-IP End Dome. Record below.

**Record measurement here:** 23.5

Technician(s) Date 5-16-05

19.29 Subtract 15mm from the number recorded in Step 19.26. This is the Spacer width for the Non-IP End. Record below.

**Recorded Measurement from Step 19.28:** 23.5

**Subtract:** **- 15mm**

**Spacer width for the Non-IP End:** 8.5

Technician(s) Date 5-16-05

20.0 Cold Bore

20.1 Position the Beam Tube (MC-369522) longitudinally per Q3 Cold Mass Welded Assembly (ME-390529).

Technician(s) _____ Date 5.17.05

20.2 Flare both ends of the Beam Tube using Flaring Tool (MC-390416) per Q3 Cold Mass Welded Assembly (ME-390529).

Technician(s) _____ Date 5/17/05

20.3 Add Spacer between Beam Tube Flange and IP End Dome, if necessary.

**Spacer Added? Yes ☑ No ☐**

Technician(s) _____ Date 5.17.05

20.4 Position Beam Tube Flange (MC-390538) over the Beam Tube and onto IP End Dome per Q3 Cold Mass Welded Assembly (ME-390529).

Technician(s) _____ Date 5.17.05

20.5 Weld the Beam Tube to the Flange at IP End as per Q3 Cold Mass Welded Assembly (ME-390529).

Weldor(s) _____ Date 5/17/05

20.6 Position the Beam Tube Flange (MC-390538) over the Beam Tube and onto the Non-IP End Dome (Q3) per Q3 Cold Mass Welded Assembly (ME-390529).

Technician(s) _____ Date 5-18-05

20.7 Weld Beam Tube to Flange at Non-IP End as per Q3 Cold Mass Welded Assembly (ME-390529).

Weldor(s) _____ Date 5/17/05

20.8 Perform a stretched wire measurement of the system to align the Beam Tube Flange within ± .5 mm.

Responsible Authority/Physicist _____ Date 5/18/05

20.9 Align Beam Tube and the Flange at IP End per Q3 Cold Mass Welded Assembly (ME-390529).

Technician(s) _____ Date 5-18-05

20.10 Weld the Flange to the IP End Dome as per Q3 Cold Mass Welded Assembly (ME-390529).

Weldor(s) _____ Date 5-18-05

20.11 Align Beam Tube and Flange at NON-IP End per Q3 Cold Mass Welded Assembly (ME-390529).

Technician(s) _____ Date 5-18-05

20.12 Weld the Flange to the Non-IP End Dome as per Q3 Cold Mass Welded Assembly (ME-390529).

Weldor(s) _____ Date 5-18-05

21.0 Electrical Inspection

21.1 Perform an electrical inspection on each of the Individual Quadrants and the Cold Mass. Refer to the Valhalla and Leader Free Standing Coil Measurement Procedure (ES-292306).

**To measure the Resistance of a Q3 Cold Mass:**

1. Use Valhalla Scientific 4300B digital micro-ohmmeter.
2. Set Test Current to 0.1 amp.
3. Set Scale to 2V full scale.
4. Turn temperature compensation on.
5. Turn test current off.
6. Connect $I_{HI}$ to "A" Lead as shown in figure 21.1-A.
7. Connect $I_{LO}$ to "B" Lead as shown in figure 21.1-A.
8. Turn test current on.
9. Connect $V_{HI}$ and $V_{LO}$ to voltage taps as shown in resistance table.
10. To measure Total with leads, connect $V_{HI}$ to "A" Lead and $V_{LO}$ to "B" Lead.
11. At the IP End, jumper the 8Ka leads as shown in Figure 21.1-A.
12. Read resistance and record in traveler.

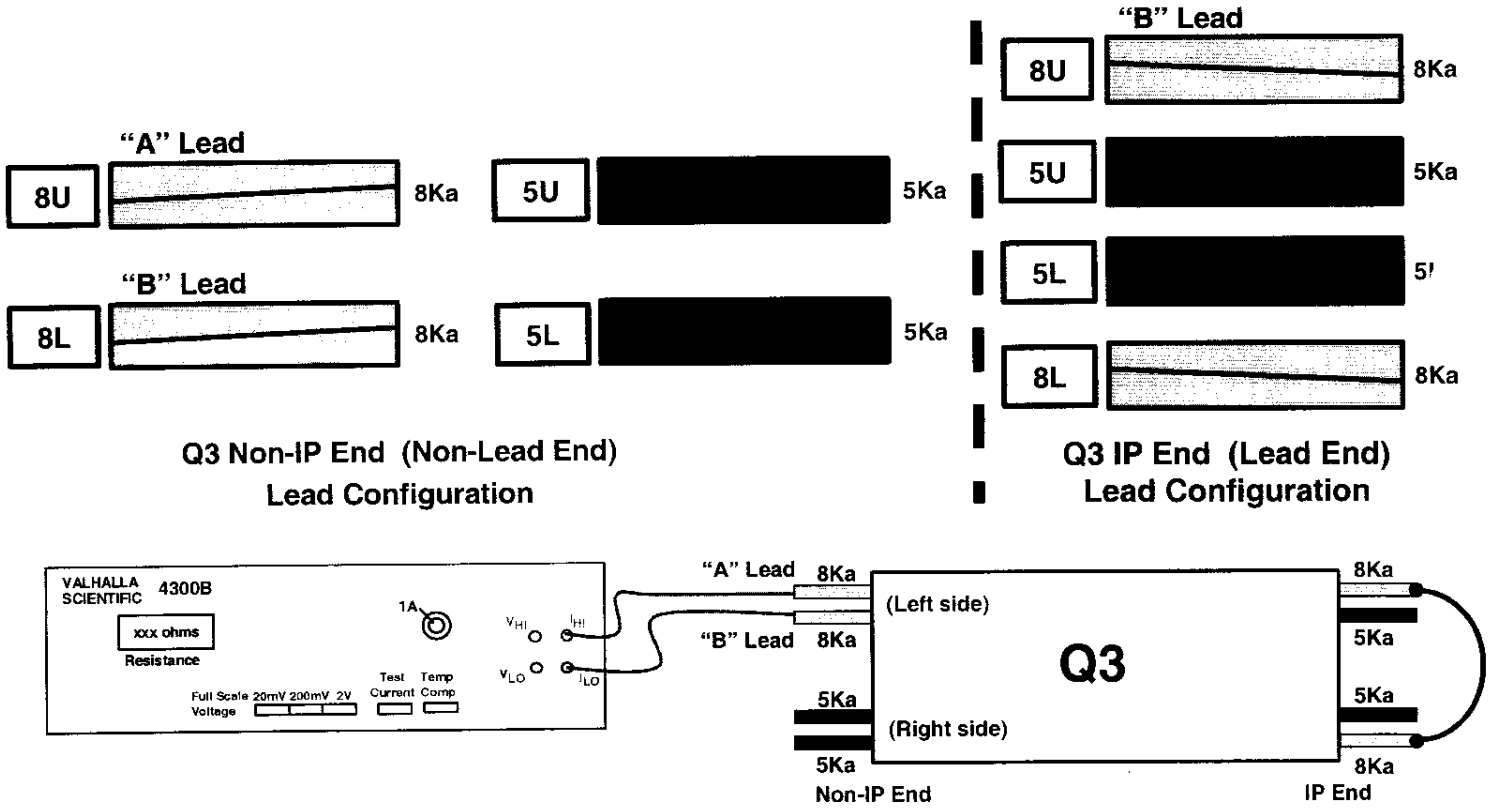


# Figure 21.1-A

| (Q3) Resistance | | | | Nominal 3.35 to 3.45 Ω |
|---|---|---|---|---|
| Voltage Tap Serial Numbers | | | | Total Resistance |
| Connect | Fermi | CERN | KEK | |
| $V_{HI}$ | VTa1Q3 | EE1113 | a1 | 3.43 Ω |
| $V_{LO}$ | VTc1Q3 | EE1213 | c1 | |
| $V_{HI}$ | VTc1Q3 | EE1213 | c1 | 3.43 Ω |
| $V_{LO}$ | VTb1Q3 | EE1313 | b1 | |

| | | | | Total Resistance with Leads |
|---|---|---|---|---|
| | | | | Nominal 6.75 to 6.85 |
| $V_{HI}$ | VTa1Q3 | EE1113 | a1 | 6.85 Ω |
| $V_{LO}$ | VTb1Q3 | EE1313 | b1 | |
| $V_{HI}$ | Q4 Power Lead | | | 6.86 Ω |
| $V_{LO}$ | Q3 Power Lead | | | |

E. [illegible]
Technician(s)

May 19, 2005
Date

Check resistance of Redundant Voltage Taps.

| Q3 Redundant Voltage Taps | | | | Nominal 3.35 to 3.45 Ω |
|---|---|---|---|---|
| Connect | Fermi | CERN | KEK | Resistance |
| $V_{HI}$ | VTa2Q3 | EE1123 | a2 | 3.42 Ω |
| $V_{LO}$ | VTc2Q3 | EE1223 | c2 | |
| $V_{HI}$ | VTc2Q3 | EE1223 | c2 | 3.42 Ω |
| $V_{LO}$ | VTb2Q3 | EE1323 | b2 | |

E. [illegible]
Technician(s)

May 19, 2005
Date

**To measure Ls and Q of a Q3 Cold Mass:**

1. Use Agilent 4263B LCR Meter.
2. Turn power on by pushing line button. Wait 30 seconds until display screen is lit.
3. Recall program #1. To do this, push recall (Rcl), then push #1, then push Enter.
4. Push Auto/Hold button to release hold.
5. Verify that the frequency displayed in the upper right corner of the display screen is 1000 Hz and the level recorded in the lower right corner of the display screen is 1V or 1000 mV.
6. Connect $H_{cur}$ to "A" power lead as shown in figure 21.1-B.
7. Connect $L_{cur}$ to "B" power lead as shown in figure 21.1-B.
8. Connect $H_{pot}$ and $L_{pot}$ buttons to voltage taps as shown below.
9. Read Ls and Q from display and record in table.

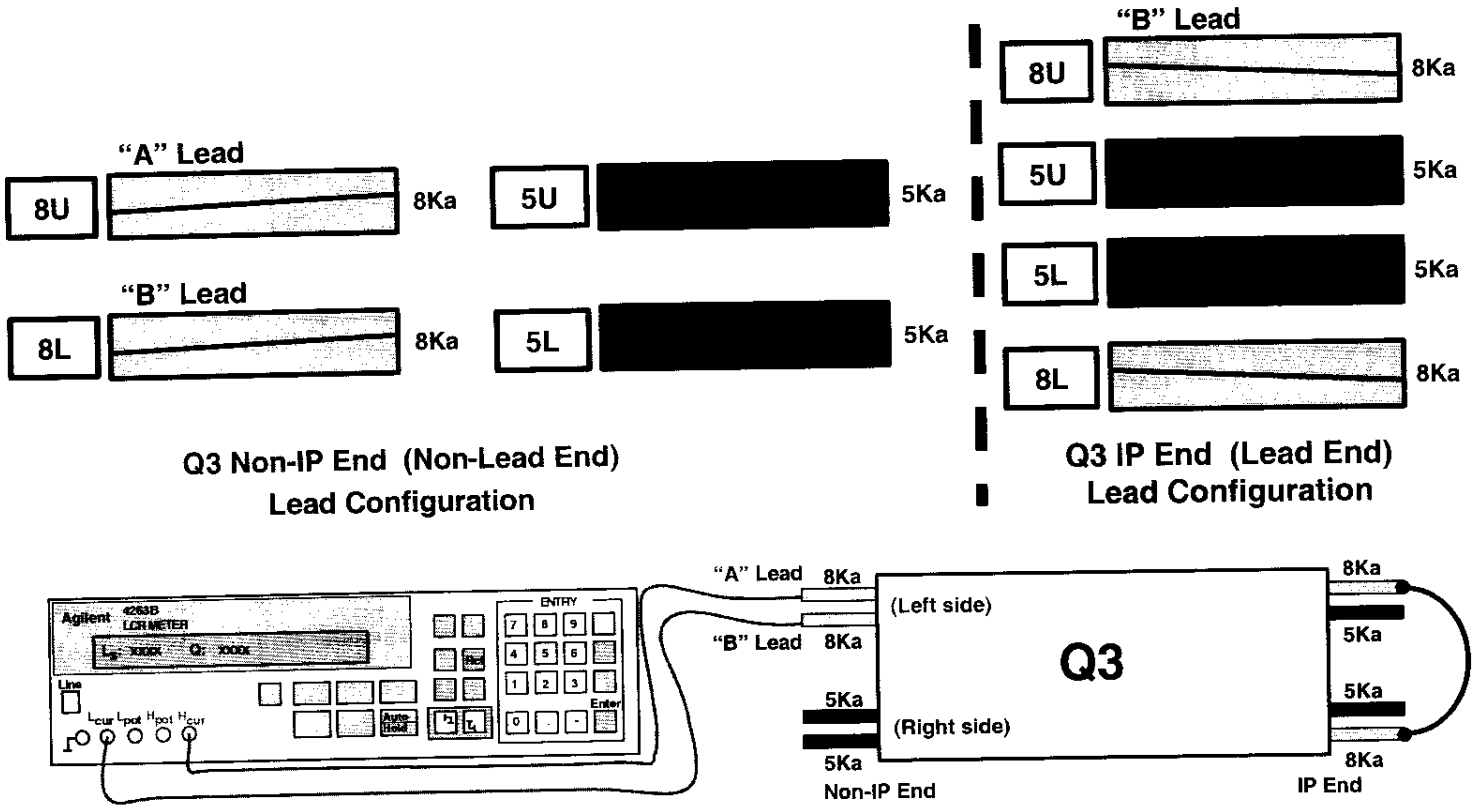


# Figure 21.1-B

| (Q3) Inductance | | | | Nominal 15 to 16 mH |
|---|---|---|---|---|
| Voltage Tap Serial Numbers | | | | Total Inductance |
| Connect | Fermi | CERN | KEK | |
| $H_{POT}$ | VTa1Q3 | EE1113 | a1 | 15.335 mH |
| $L_{POT}$ | VTc1Q3 | EE1213 | c1 | |
| $H_{POT}$ | VTc1Q3 | EE1213 | c1 | 15.351 mH |
| $L_{POT}$ | VTb1Q3 | EE1313 | b1 | |

| | | | | Nominal 30 to 32 mH |
|---|---|---|---|---|
| | | | | Total Inductance |
| $H_{POT}$ | VTa1Q3 | EE1113 | a1 | 30.678 |
| $L_{POT}$ | VTb1Q3 | EE1313 | b1 | ~~15.351~~ mH |

| (Q3) Q-Factor | | | | Nominal 1.0 to 1.2 |
|---|---|---|---|---|
| Voltage Tap Serial Numbers | | | | Total Q |
| Connect | Fermi | CERN | KEK | |
| $H_{POT}$ | VTa1Q3 | EE1113 | a1 | 1.0 |
| $L_{POT}$ | VTc1Q3 | EE1213 | c1 | |
| $H_{POT}$ | VTc1Q3 | EE1213 | c1 | 1.0 |
| $L_{POT}$ | VTb1Q3 | EE1313 | b1 | |

| | | | | Nominal 1.0 to 1.2 |
|---|---|---|---|---|
| | | | | Total Q |
| $H_{POT}$ | VTa1Q3 | EE1113 | a1 | 1.0 |
| $L_{POT}$ | VTb1Q3 | EE1313 | b1 | |

Technician(s)

Date Aug 19, 2005

**To measure the resistance of a Thermometer (RTD):**

1. Use Hewlett Packard HP3457A digital multimeter.
2. Record temperature of building within +/- 5 degrees.
3. Press line button to turn line on.
4. Connect wires as shown in Figure below.
   U+ (Black) to Sense HI
   I+ (Yellow) to Input HI
   U- (Red) to Sense LO
   I- (Green) to Input LO
5. Push blue button (function key) once.
6. Push OHMF button.
7. Verify arrow in readout is above the 4WΩ (meaning a 4 wire resistance measurement).
8. Read resistance in ohms and record in traveler.

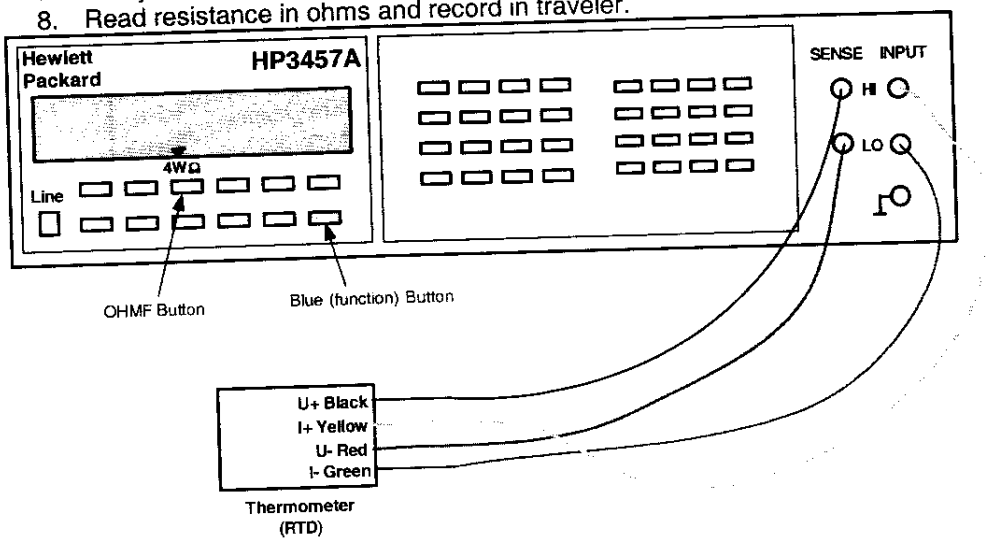


**To measure the resistance of a Cryogenic (Warm-up) Heater**

1. Use Hewlett Packard HP3457A digital multimeter.
2. Record temperature of building within +/- 5 degrees.
3. Press line button to turn line on.
4. Connect wires as shown in Figure below.
5. Push blue button (function key) once.
6. Push OHMF button.
7. Verify arrow in readout is above the 4WΩ (meaning a 4 wire resistance measurement).
   **Note: Although this is technically a 4 wire measurement, it is effectively a 2 wire measurement, since there are only 2 wires connected to each heater.**
8. Read resistance in ohms and record in traveler.

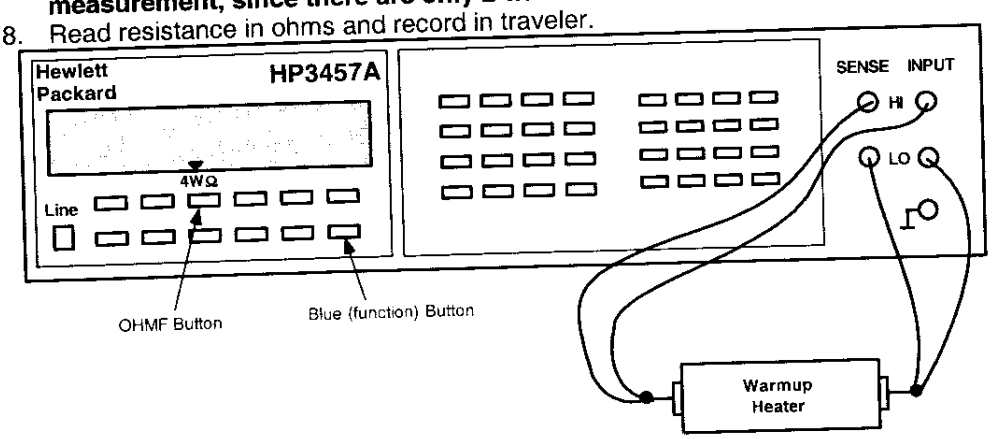

HGQ 0572 (4209)

| Q3 - RTD's and Cryogenic (warm-up) Heaters | | | | |
|---|---|---|---|---|
| Temperature of Building (± 5°): 74°F | | | | |
| **Component** | **Fermi** | **CERN** | **Range** | **Resistance** |
| Q3 RTD, primary | TaQ3 | TT8313 | 60 to 70 Ω | 64.543 Ω |
| Q3 RTD, redundant | TbQ3 | TT8323 | 60 to 70 Ω | Dead? Ω -E.J.S |
| Q3 Cryogenic (warm-up) Heater (LE) - wire at top (CERN #1 I+) | W1aQ3 | EH8313+ | 16 to 18.5 Ω | 16.628 Ω |
| Q3 Cryogenic (warm-up) Heater (LE) - wire at bottom (CERN #1 I-) | W2aQ3 | EH8313- | | |
| Q3 Cryogenic (warm-up) Heater (Non-LE) - wire at top (CERN #2 I+) | W1bQ3 | EH8323+ | 16 to 18.5 Ω | 16.212 Ω |
| Q3 Cryogenic (warm-up) Heater (Non-LE) - wire at bottom (CERN #2 I-) | W2bQ3 | EH8323- | | |

Technician(s) Date Aug 19, 2005

Using the Hewlett Packard HP3457A digital multimeter, measure the Protection (Strip) Heater Resistance for Q3.

| Q3 Protection (Strip) Heater Resistance | | | | | |
|---|---|---|---|---|---|
| **Fermi** | **CERN** | **KEK** | **Description** | **Limit** | **Resistance** |
| H1aQ3 | YT1113+ | HA1 | Circuit A | 28 to 32 Ω | 29.106 Ω |
| H2aQ3 | YT1113- | HA2 | | | |
| H1bQ3 | YT1123+ | HB1 | Circuit B | 28 to 32 Ω | 29.170 Ω |
| H2bQ3 | YT1123- | HB2 | | | |

Technician(s) Date Aug 19, 2005

NEW RTD INSTALLED IN "RHINO HORN" PER DR HGQ 0572
TT8323 (CX_LS_X17274)
EXP. RES = 64.961 FERMI = 66.734
HIPOT @ 1000V = < .1 μA

21.2 Check Q1 & Q2 Instrumentation Bus Wires for Continuity.

| Module | Pin | Fermi | CERN | KEK | Description | Done |
|---|---|---|---|---|---|---|
| M2 | 1 | VTa1Q1 | EE1111 | a1 | Q1 Lead Voltage Tap "a" , primary | ✓ |
| M2 | 2 | VTa2Q1 | EE1121 | a2 | Q1 Lead Voltage Tap "a", redundant | ✓ |
| M2 | 3 | VTc1Q1 | EE1211 | c1 | Q1 Center Voltage Tap "c", primary | ✓ |
| M2 | 4 | VTc2Q1 | EE1221 | c2 | Q1 Center Voltage Tap "c", redundant | ✓ |
| M2 | 5 | VTb1Q1 | EE1311 | b1 | Q1 Lead Voltage Tap "b", primary | ✓ |
| M3 | 1 | VTc1Q2a | EE1212 | | Q2a Center Voltage Tap "c", primary | ✓ |
| M3 | 3 | VTa2Q2a | EE1122 | | Q2a lead Voltage Tap "a", redundant | ✓ |
| M3 | 4 | VTa1Q2a | EE1112 | | Q2a Lead Voltage Tap "a", primary | ✓ |
| M3 | 5 | VTb2Q1 | EE1321 | b2 | Q1 Lead Voltage Tap "b", redundant | ✓ |
| M4 | 1 | VTc2Q2a | EE1222 | | Q2a Center Voltage Tap "c", redundant | ✓ |
| M4 | 3 | VTb1Q2a | EE1312 | | Q2a Lead Voltage Tap "b", primary | ✓ |
| M4 | 4 | VTb2Q2a | EE1322 | | Q2a Lead Voltage Tap "b", redundant | ✓ |
| M4 | 5 | VTb1Q2b | EE1612 | | Q2b lead Voltage Tap "b", primary | ✓ |
| M5 | 2 | VTc2Q2b | EE1522 | | Q2b Center Voltage Tap "c", redundant | ✓ |
| M5 | 3 | VTc1Q2b | EE1512 | | Q2b Center Voltage Tap "c", primary | ✓ |
| M5 | 5 | VTb2Q2b | EE1622 | | Q2b Lead Voltage Tap "b" redundant | ✓ |
| M6 | 1 | VTa1Q2b | EE1412 | | Q2b Lead Voltage Tap "a", primary | ✓ |
| M6 | 2 | VTa2Q2b | EE1422 | | Q2b Lead Voltage Tap "a", redundant | ✓ |
| M8 | 1 | VTH1 | EE8121 | | Corrector voltage tap Q1-H1 (skew dipole) (on MCBX, MCBXH, A+ lead) | ✓ |
| M8 | 2 | VTV1 | EE8111 | | Corrector voltage tap Q1-V1 (normal dipole) (on MCBX, MCBXV A+ lead) | ✓ |
| M8 | 3 | VTH2 | EE8122 | | Corrector voltage tap Q2-H2 (skew dipole) (on MCBX, MCBXH, A+ lead) | ✓ |
| M8 | 4 | VTV2 | EE8112 | | Corrector voltage tap Q2-V2 (normal dipole) (on MCBX, MCBXV, A+ lead) | ✓ |
| M10 | 1 | W1aQ1 | EH8311+ | | Q1 Cryogenic Heater lead end - wire at top (CERN #1 I+) | ✓ |
| M10 | 2 | W2aQ1 | EH8311- | | Q1 Cryogenic Heater lead end - wire at bottom (CERN #1 I-) | ✓ |
| M10 | 3 | W1bQ1 | EH8321+ | | Q1 Cryogenic Heater non-lead end - wire at top (CERN #2 I+) | ✓ |
| M10 | 4 | W2bQ1 | EH8321- | | Q1 Cryogenic Heater non-lead end - wire at bottom (CERN #2 I-) | ✓ |
| M11 | 1 | W1aQ2A | EH8312+ | | Q2A Cryogenic Heater lead end - wire toward cold mass end plate (CERN #1 I+) | ✓ |
| M11 | 2 | W2aQ2A | EH8312- | | Q2A Cryogenic Heater lead end - wire toward cold mass mag center (CERN #1 I-) | ✓ |
| M11 | 3 | W1bQ2A | EH8322+ | | Q2A Cryogenic Heater non-lead end- wire toward cold mass end plate (CERN #2 I+) | ✓ |

| Module | Pin | Fermi | CERN | KEK | Description | Done |
|---|---|---|---|---|---|---|
| M11 | 4 | W2bQ2A | EH8322- | | Q2A Cryogenic Heater non-lead end- wire toward cold mass mag center (CERN #2 I-) | ✓ |
| M12 | 1 | W1aQ2B | EH8332+ | | Q2B Cryogenic Heater lead end - wire toward cold mass end plate (CERN #1 I+) | ✓ |
| M12 | 2 | W2aQ2B | EH8332- | | Q2B Cryogenic Heater lead end - wire toward cold mass mag center (CERN #1 I-) | ✓ |
| M12 | 3 | W1bQ2B | EH8342+ | | Q2B Cryogenic Heater non-lead end- wire toward cold mass end plate (CERN #2 I+) | ✓ |
| M12 | 4 | W2bQ2B | EH8342- | | Q2B Cryogenic Heater non-lead end- wire toward cold mass mag center (CERN #2 I-) | ✓ |
| M14 | 1 | H1aQ1 | YT1111+ | HA1 | Q1 Protection (Strip) Heater, ("a" circuit) (CERN lead #1+) | ✓ |
| M14 | 3 | H2aQ1 | YT1111- | HA2 | Q1Protection (Strip) Heater, ("a" circuit) (CERN lead #1-) | ✓ |
| M14 | 5 | H1bQ1 | YT1121+ | HB1 | Q1 Protection (Strip) Heater, ("b" circuit) (CERN lead #2+) | ✓ |
| M15 | 2 | H1aQ2a | YT1112+ | | Q2a Protection (Strip) Heater, 1-4 & 2-3 circuit (FNAL lead A+) (CERN lead #1+) | ✓ |
| M15 | 4 | H2bQ1 | YT1121- | HB2 | Q1 Protection (Strip) Heater, ("b" circuit) (CERN lead #2-) | ✓ |
| M16 | 1 | H2aQ2a | YT1112- | | Q2a Protection (Strip) Heater, 1-4 & 2-3 circuit (FNAL lead A-) (CERN lead #1-) | ✓ |
| M16 | 3 | H1bQ2a | YT1122+ | | Q2a Protection (Strip) Heater, 1-2 & 3-4 circuit (FNAL lead B+) (CERN lead#2+) | ✓ |
| M16 | 5 | H2bQ2a | YT1122- | | Q2a Protection (Strip) Heater, 1-2 & 3-4 circuit (FNAL lead B-) (CERN lead #2-) | ✓ |
| M17 | 2 | H2aQ2b | YT1132- | | Q2b Protection (Strip) Heater, 1-4 & 2-3 circuit (FNAL lead A-) (CERN lead #1-) | ✓ |
| M17 | 4 | H1aQ2b | YT1132+ | | Q2b Protection (Strip) Heater, 1-4 & 2-3 circuit (FNAL lead A+) (CERN lead #1+) | ✓ |
| M18 | 1 | H1bQ2b | YT1142+ | | Q2b Protection (Strip) Heater, 1-2 & 3-4 circuit (FNAL lead B+) (CERN lead#2+) | ✓ |
| M18 | 3 | H2bQ2b | YT1142- | | Q2b Protection (Strip) Heater, 1-2 & 3-4 circuit (FNAL lead B-) (CERN lead #2-) | ✓ |
| M20 | 1 | TaQ1_I+ | TT8311 I+ | | Q1 RTD, primary Wire color: Yellow | ✓ |
| M20 | 2 | TaQ1_I- | TT8311 I- | | Q1 RTD, primary Wire color: Green | ✓ |
| M20 | 3 | TaQ1_V+ | TT8311 U+ | | Q1 RTD, primary Wire color: Black | ✓ |
| M20 | 4 | TaQ1_V- | TT8311 U- | | Q1 RTD, primary Wire color: Red | ✓ |
| M20 | 5 | TbQ1_I+ | TT8321 I+ | | Q1 RTD, redundant: Wire color: Yellow | ✓ |
| M20 | 6 | TbQ1_I- | TT8321 I- | | Q1 RTD, redundant: Wire color: Green | ✓ |
| M20 | 11 | TbQ1_V+ | TT8321 U+ | | Q1 RTD, redundant: Wire color: Black | ✓ |
| M20 | 10 | TbQ1_V- | TT8321 U- | | Q1 RTD, redundant: Wire color: Red | ✓ |
| M20 | 9 | TaQ2a_I+ | TT8312 I+ | | Q2a RTD, primary Wire color: Yellow | ✓ |
| M20 | 8 | TaQ2a_I- | TT8312 I- | | Q2a RTD, primary Wire color: Green | ✓ |

| Module | Pin | Fermi | CERN | KEK | Description | Done |
|---|---|---|---|---|---|---|
| M20 | 7 | TaQ2a_V+ | TT8312 U+ | | Q2a RTD, primary Wire color: Black | ✓ |
| M20 | 12 | TaQ2a_V- | TT8312 U- | | Q2a RTD, primary Wire color: Red | ✓ |
| M20 | 13 | TbQ2a_I+ | TT8322 I+ | | Q2a RTD, redundant: Wire color: Yellow | ✓ |
| M20 | 14 | TbQ2a_I- | TT8322 I- | | Q2a RTD, redundant: Wire color: Green | ✓ |
| M20 | 15 | TbQ2a_V+ | TT8322 U+ | | Q2a RTD, redundant: Wire color: Black | ✓ |
| M20 | 16 | TbQ2a_V- | TT8322 U- | | Q2a RTD, redundant: Wire color: Red | ✓ |
| M21 | 1 | TaQ2b_I+ | TT8332 I+ | | Q2b RTD, primary Wire color: Yellow | ✓ |
| M21 | 2 | TaQ2b_I- | TT8332 I- | | Q2b RTD, primary Wire color: Green | ✓ |
| M21 | 3 | TaQ2b_V+ | TT8332 U+ | | Q2b RTD, primary Wire color: Black | ✓ |
| M21 | 4 | TaQ2b_V- | TT8332 U- | | Q2b RTD, primary Wire color: Red | ✓ |
| M21 | 5 | TbQ2b_I+ | TT8342 I+ | | Q2b RTD, redundant: Wire color: Yellow | ✓ |
| M21 | 6 | TbQ2b_I- | TT8342 I- | | Q2b RTD, redundant: Wire color: Green | ✓ |
| M21 | 11 | TbQ2b_V+ | TT8342 U+ | | Q2b RTD, redundant: Wire color: Black | ✓ |
| M21 | 10 | TbQ2b_V- | TT8342 U- | | Q2b RTD, redundant: Wire color: Red | ✓ |

Technician(s) — Date: May 19, 2005

Responsible Authority/Physicist — Date: 25-MAY-2005

21.3 Using the Valhalla 4300B, connect 10mA applied voltage thru the corrector Power Leads. Measure Resistance and record in the table below. Record Initial resistance of Corrector Element and record below.

**Corrector Bus Leads**

| | | | | | | | | | |
|---|---|---|---|---|---|---|---|---|---|
| | V3A | V3B | H3A | H3B | B3A | B3B | B6A | B6B | |
| | V2A | V2B | H2A | H2B | B4A | B4B | A4A | A4B | |
| | V1A | V1B | H1A | H1B | A2A | A2B | A3A | A3B | |

**(View Looking from DFBX into Q3)**

| Corrector Assembly | Corrector Element | Readout Labels | | Power Labels | | Resistance | Initial Resistance |
|---|---|---|---|---|---|---|---|
| | | | | $I_{HI}$ | $I_{LO}$ | | |
| MQSX | MQSX | A2A | EE8223 | A2A | A2B | .06 | MQSX |
| | | EE8223 | A2B | | | 7.66 | |
| | | A2A | A2B | | | 7.72 | |
| MCBXA | MCBXV | V3A | EE8113 | V3A | V3B | .02 | MCBXV |
| | | EE8113 | V3B | | | 17.60 | |
| | | V3A | V3B | | | 17.61 | |
| | MCBXH | H3A | EE8123 | H3A | H3B | .02 | MCBXH |
| | | EE8123 | H3B | | | 21.63 | |
| | | H3A | H3B | | | 21.64 | |
| | MCTX | B6A | EE8613 | B6A | B6B | .02 | MCTX |
| | | EE8613 | B6B | | | 99.02 | |
| | | B6A | B6B | | | 99.02 | |
| | MCSX | B3A | EE8313 | B3A | B3B | .02 | MCSX |
| | | EE8313 | B3B | | | 28.08 | |
| | | B3A | B3B | | | 28.08 | |
| MCSOX | MCOSX | A4A | EE8423 | A4A | A4B | .01 | MCOSX |
| | | EE8423 | A4B | | | 11.68 | |
| | | A4A | A4B | | | 11.69 | |
| | MCOX | B4A | EE8413 | B4A | B4B | ~~.02~~ .01 | MCOX |
| | | EE8413 | B4B | | | 12.84 | |
| | | B4A | B4B | | | 12.86 | |
| | MCSSX | A3A | EE8323 | A3A | A3B | .01 | MCSSX |
| | | EE8323 | A3B | | | 13.32 | |
| | | A3A | A3B | | | 13.33 | |

Technician(s)

Date 19, 2005

21.4 Hipot the Cable Busses according to tables below. Hipots are done @ 3kV. Hold for 30 seconds.

| Ramp Rate | Hi Potential (3000 V) | Grounded | Leakage |
|---|---|---|---|
| 10 V/sec | 8L | Everything else | .463 µA |
| 10 V/sec | 5L | Everything else | .598 µA |
| 10 V/sec | 5U | Everything else | .104 µA |
| 3 V/sec.<br>Coil - Ground<br>Coil - Strip Htrs | 8U | Everything else | .374 |
| 3 V/sec.<br>Strip Htrs - Ground<br>Strip Htrs - Coil | Strip Heaters | Everything else | .353 |

Technician(s)

5-20-05
Date

21.5 Hipot according to tables below.

# Final Q3 Corrector and Bus Hipots

## Looking into Non-IP End of Q3

Looking from DFBX to Q3

Gray – 500V | Others – 0V | ### Others – 0V

| | | | | | | | | | | | |
|---|---|---|---|---|---|---|---|---|---|---|---|
| MCBXA | | V3A | V3B | H3A | H3B | B3A | B3B | B6A | B6B | | MCBXA |
| Q2 | | V2A | V2B | H2A | H2B | B4A | B4B | A4A | A4B | | MCSOX |
| Q1 | | V1A | V1B | H1A | H1B | A2A | A2B | A3A | A3B | | |
| | | | | | | MQSX | | MCSOX | | | |

This shows the corrector bus in its final configuration as it enters the DFBX

Need to verify that there is no continuity between any of these paths

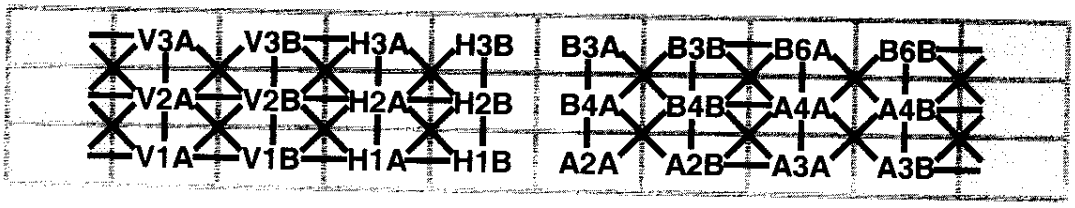


**Measurement**

Hipot #1
Gray – 500V
Others – 0V

| | | | | | | | | | |
|---|---|---|---|---|---|---|---|---|---|
| | V3A | V3B | H3A | H3B | B3A | B3B | B6A | B6B | |
| | V2A | V2B | H2A | H2B | B4A | B4B | A4A | A4B | |
| | V1A | V1B | H1A | H1B | A2A | A2B | A3A | A3B | |

.224 µA

Hipot #2
Gray – 500V
Others – 0V

| | | | | | | | | | |
|---|---|---|---|---|---|---|---|---|---|
| | V3A | V3B | H3A | H3B | B3A | B3B | B6A | B6B | |
| | V2A | V2B | H2A | H2B | B4A | B4B | A4A | A4B | |
| | V1A | V1B | H1A | H1B | A2A | A2B | A3A | A3B | |

.389 µA

Hipot #3
Gray – 500V
Others – 0V

| | | | | | | | | | |
|---|---|---|---|---|---|---|---|---|---|
| | V3A | V3B | H3A | H3B | B3A | B3B | B6A | B6B | |
| | V2A | V2B | H2A | H2B | B4A | B4B | A4A | A4B | |
| | V1A | V1B | H1A | H1B | A2A | A2B | A3A | A3B | |

.177 µA

Hipot #4
Gray – 500V
Others – 0V

| | | | | | | | | | |
|---|---|---|---|---|---|---|---|---|---|
| | V3A | V3B | H3A | H3B | B3A | B3B | B6A | B6B | |
| | V2A | V2B | H2A | H2B | B4A | B4B | A4A | A4B | |
| | V1A | V1B | H1A | H1B | A2A | A2B | A3A | A3B | |

.401 µA

# Final Q3 Corrector and Bus Hipots

## Looking into Non-IP End of Q3

**Looking from DFBX to Q3**

**Measurement**

**Hipot #5**
**Gray – 500V**
**Others – 0V**

| | | | | | | | | |
|---|---|---|---|---|---|---|---|---|
| V3A | V3B | H3A | H3B | B3A | B3B | B6A | B6B | |
| V2A | V2B | H2A | H2B | [redacted] | [redacted] | A4A | A4B | |
| V1A | V1B | H1A | H1B | A2A | A2B | A3A | A3B | |

.301 µA

**Hipot #6**
**Gray – 500V**
**Others – 0V**

| | | | | | | | | |
|---|---|---|---|---|---|---|---|---|
| V3A | V3B | H3A | H3B | B3A | B3B | B6A | B6B | |
| V2A | V2B | H2A | H2B | B4A | B4B | A4A | A4B | |
| V1A | V1B | H1A | H1B | A2A | A2B | A3A | A3B | |

.262 µA

**Hipot #7**
**Gray – 500V**
**Others – 0V**

| | | | | | | | | |
|---|---|---|---|---|---|---|---|---|
| V3A | V3B | H3A | H3B | B3A | B3B | B6A | B6B | |
| V2A | V2B | H2A | H2B | B4A | B4B | A4A | A4B | |
| V1A | V1B | H1A | H1B | A2A | A2B | A3A | A3B | |

.161 µA

Technician(s)

5-20-05
Date

22.0 Installation of Hypertronics

22.1 Assemble/Install Hypertronics Connectors, **without Cover** at **Non-IP End** as per Q3 Module Assembly (ME-369900). Pin Numbers for connectors are shown in Table 22.1 below.

# Table 22.1

| Module | Pin | Fermilab Label | CERN Label | KEK Label | Description |
|---|---|---|---|---|---|
| M1 | 1 | | | | Blank Module |
| M1 | 2 | | | | |
| M1 | 3 | | | | |
| M1 | 4 | | | | |
| M1 | 5 | | | | |
| M2 | 1 | VTa1Q1 | EE1111 | a1 | Q1 Lead Voltage Tap "a" , primary |
| M2 | 2 | VTa2Q1 | EE1121 | a2 | Q1 Lead Voltage Tap "a", redundant |
| M2 | 3 | VTc1Q1 | EE1211 | c1 | Q1 Center Voltage Tap "c", primary |
| M2 | 4 | VTc2Q1 | EE1221 | c2 | Q1 Center Voltage Tap "c", redundant |
| M2 | 5 | VTb1Q1 | EE1311 | b1 | Q1 Lead Voltage Tap "b", primary |
| M3 | 1 | VTc2Q2a | EE1222 | | Q2a Center Voltage Tap "c" , redundant |
| M3 | 2 | VTc1Q2a | EE1212 | | Q2a Center Voltage Tap "c" , primary |
| M3 | 3 | VTa2Q2a | EE1122 | | Q2a Lead Voltage Tap "a", redundant |
| M3 | 4 | VTa1Q2a | EE1112 | | Q2a Lead Voltage Tap "a", primary |
| M3 | 5 | VTb2Q1 | EE1321 | b2 | Q1 Lead Voltage Tap "b",redundant |
| M4 | 1 | VTb1Q2a | EE1312 | | Q2a Lead Voltage Tap "b", primary |
| M4 | 2 | VTb2Q2a | EE1322 | | Q2a Lead Voltage Tap "b", redundant |
| M4 | 3 | VTb1Q2b | EE1612 | | Q2b Lead Voltage Tap "b", primary |
| M4 | 4 | VTb2Q2b | EE1622 | | Q2b Lead Voltage Tap "b", redundant |
| M4 | 5 | VTc1Q2b | EE1512 | | Q2b Center Voltage Tap "c" , primary |
| M5 | 1 | VTa2Q3 | EE1123 | a2 | Q3 Lead Voltage Tap "a", redundant |
| M5 | 2 | VTa1Q3 | EE1113 | a1 | Q3 Lead Voltage Tap "a", primary |
| M5 | 3 | VTa2Q2b | EE1422 | | Q2b Lead Voltage Tap "a", redundant |
| M5 | 4 | VTa1Q2b | EE1412 | | Q2b Lead Voltage Tap "a", primary |
| M5 | 5 | VTc2Q2b | EE1522 | | Q2b Center Voltage Tap "c" , redundant |
| M6 | 1 | VTc1Q3 | EE1213 | c1 | Q3 Center Voltage Tap "c" , primary |
| M6 | 2 | VTc2Q3 | EE1223 | c2 | Q3 Center Voltage Tap "c" , redundant |
| M6 | 3 | VTb1Q3 | EE1313 | b1 | Q3 Lead Voltage Tap "b" , primary |
| M6 | 4 | VTb2Q3 | EE1323 | b2 | Q3 Lead Voltage Tap "b" , redundant |
| M6 | 5 | Empty | Empty | | No connection |
| M7 | 1 | | | | Blank Module |
| M7 | 2 | | | | |
| M7 | 3 | | | | |
| M7 | 4 | | | | |
| M7 | 5 | | | | |

# Table 22.1 (continued)

| Module | Pin | Fermilab Label | CERN Label | KEK Label | Description |
|---|---|---|---|---|---|
| M8 | 1 | VTH1 | EE8121 | | Corrector voltage tap Q1-H1 (skew dipole) (on MCBX, MCBXH, A+ lead) |
| M8 | 2 | VTV1 | EE8111 | | Corrector voltage tap Q1-V1 (normal dipole) (on MCBX, MCBXV A+ lead) |
| M8 | 3 | VTH2 | EE8122 | | Corrector voltage tap Q2-H2 (skew dipole) (on MCBX, MCBXH, A+ lead) |
| M8 | 4 | VTV2 | EE8112 | | Corrector voltage tap Q2-V2 (normal dipole) (on MCBX, MCBXV, A+ lead) |
| M8 | 5 | Empty | Empty | | No connection |
| | | | | | |
| M9 | 1 | VTH3 | EE8123 | | Corrector voltage tap Q3-H3 (skew dipole) (on |
| M9 | 2 | VTV3 | EE8113 | | Corrector voltage tap Q3-V3 (normal dipole) (on |
| M9 | 3 | VTA2 | EE8223 | | Corrector voltage tap Q3-A2 (skew quadrupole) (on |
| M9 | 4 | VTA3 | EE8323 | | Corrector voltage tap Q3-A3 (skew sextupole) (on |
| M9 | 5 | Empty | Empty | | No Connection |
| | | | | | |
| M10 | 1 | VTB3 | EE8313 | | Corrector voltage tap Q3-B3 (normal sextupole)(on |
| M10 | 2 | VTA4 | EE8423 | | Corrector voltage tap Q3-A4 (skew octupole) (on |
| M10 | 3 | VTB4 | EE8413 | | Corrector voltage tap Q3-B4 (normal octupole) (on |
| M10 | 4 | VTB6 | EE8613 | | Corrector voltage tap Q3-B6 (normal dodecapole) |
| M10 | 5 | Empty | Empty | | No Connection |
| | | | | | |
| M11 | 1 | | | | Blank Module |
| M11 | 2 | | | | |
| M11 | 3 | | | | |
| M11 | 4 | | | | |
| M11 | 5 | | | | |
| | | | | | |
| M12 | 1 | W1aQ1 | EH8311+ | | Q1 Cryogenic Heater lead end - wire at top (CERN |
| M12 | 2 | W2aQ1 | EH8311- | | Q1 Cryogenic Heater lead end - wire at bottom |
| M12 | 3 | W1bQ1 | EH8321+ | | Q1 Cryogenic Heater non-lead end - wire at top |
| M12 | 4 | W2bQ1 | EH8321- | | Q1 Cryogenic Heater non-lead end - wire at bottom |
| M12 | 5 | Empty | Empty | | No Connection |
| | | | | | |

# Table 22.1 (continued)

| Module | Pin | Fermilab Label | CERN Label | KEK Label | Description |
|---|---|---|---|---|---|
| M13 | 1 | W1aQ2A | EH8312+ | | Q2A Cryogenic Heater lead end - wire toward cold mass end plate (CERN #1 I+) |
| M13 | 2 | W2aQ2A | EH8312- | | Q2A Cryogenic Heater lead end - wire toward cold mass mag center (CERN #1 I-) |
| M13 | 3 | W1bQ2A | EH8322+ | | Q2A Cryogenic Heater non-lead end- wire toward cold mass end plate (CERN #2 I+) |
| M13 | 4 | W2bQ2A | EH8322- | | Q2A Cryogenic Heater non-lead end- wire toward cold mass mag center (CERN #2 I-) |
| M13 | 5 | Empty | Empty | | No connection |
| | | | | | |
| M14 | 1 | W1aQ2B | EH8332+ | | Q2B Cryogenic Heater lead end - wire toward cold mass end plate (CERN #1 I+) |
| M14 | 2 | W2aQ2B | EH8332- | | Q2B Cryogenic Heater lead end - wire toward cold mass mag center (CERN #1 I-) |
| M14 | 3 | W1bQ2B | EH8342+ | | Q2B Cryogenic Heater non-lead end- wire toward cold mass end plate (CERN #2 I+) |
| M14 | 4 | W2bQ2B | EH8342- | | Q2B Cryogenic Heater non-lead end- wire toward cold mass mag center (CERN #2 I-) |
| M14 | 5 | Empty | Empty | | No connection |
| | | | | | |
| M15 | 1 | W1aQ3 | EH8313+ | | Q3 Cryogenic Heater lead end - wire at top (CERN #1 I+) |
| M15 | 2 | W2aQ3 | EH8313- | | Q3 Cryogenic Heater lead end - wire at bottom (CERN #1 I-) |
| M15 | 3 | W1bQ3 | EH8323+ | | Q3 Cryogenic Heater non-lead end - wire at top (CERN #2 I+) |
| M15 | 4 | W2bQ3 | EH8323- | | Q3 Cryogenic Heater non-lead end - wire at bottom (CERN #2 I-) |
| M15 | 5 | Empty | Empty | | No Connection |
| | | | | | |
| M16 | 1 | | | | Blank Module |
| M16 | 2 | | | | |
| M16 | 3 | | | | |
| M16 | 4 | | | | |
| M16 | 5 | | | | |
| | | | | | |
| M17 | 1 | H1aQ1 | YT1111+ | HA1 | Q1 Protection (Strip) Heater, ("a" circuit) (CERN lead #1+) |
| M17 | 2 | Empty | Empty | | No connection |
| M17 | 3 | H2aQ1 | YT1111- | HA2 | Q1 Protection (Strip) Heater, ("a" circuit) (CERN lead #1-) |
| M17 | 4 | Empty | Empty | | No connection |
| M17 | 5 | H1bQ1 | YT1121+ | HB1 | Q1 Protection (Strip) Heater, ("b" circuit) (CERN lead #2+) |
| | | | | | |
| M18 | 1 | Empty | Empty | | No connection |
| M18 | 2 | H1aQ2a | YT1112+ | | Q2a Protection (Strip) Heater, 1-4 & 2-3 circuit (FNAL lead A+) |
| M18 | 3 | Empty | Empty | | No connection |
| M18 | 4 | H2bQ1 | YT1121- | HB2 | Q1 Protection (Strip) Heater, ("b" circuit) (CERN lead #2-) |
| M18 | 5 | Empty | Empty | | No connection |
| | | | | | |

# Table 22.1 (continued)

| Module | Pin | Fermilab Label | CERN Label | KEK Label | Description |
|---|---|---|---|---|---|
| M19 | 1 | H2aQ2a | YT1112- | | Q2a Protection (Strip) Heater, 1-4 & 2-3 circuit (FNAL lead A-) (CERN lead #1-) |
| M19 | 2 | Empty | Empty | | No connection |
| M19 | 3 | H1bQ2a | YT1122+ | | Q2a Protection (Strip) Heater, 1-2 & 3-4 circuit (FNAL lead B+) (CERN lead#2+) |
| M19 | 4 | Empty | Empty | | No connection |
| M19 | 5 | H2bQ2a | YT1122- | | Q2a Protection (Strip) Heater, 1-2 & 3-4 circuit (FNAL lead B-) (CERN lead #2-) |
| | | | | | |
| M20 | 1 | Empty | Empty | | No connection |
| M20 | 2 | H2aQ2b | YT1132- | | Q2b Protection (Strip) Heater, 1-4 & 2-3 circuit (FNAL lead A-) (CERN lead #1-) |
| M20 | 3 | Empty | Empty | | No connection |
| M20 | 4 | H1aQ2b | YT1132+ | | Q2b Protection (Strip) Heater, 1-4 & 2-3 circuit (FNAL lead A+) (CERN lead #1+) |
| M20 | 5 | Empty | Empty | | No connection |
| | | | | | |
| M21 | 1 | H1bQ2b | YT1142+ | | Q2b Protection (Strip) Heater, 1-2 & 3-4 circuit (FNAL lead B+) (CERN lead#2+) |
| M21 | 2 | Empty | Empty | | No connection |
| M21 | 3 | H2bQ2b | YT1142- | | Q2b Protection (Strip) Heater, 1-2 & 3-4 circuit (FNAL lead B-) (CERN lead #2-) |
| M21 | 4 | Empty | Empty | | No Connection |
| M21 | 5 | H1aQ3 | YT1113+ | HA1 | Q3 Protection (Strip) Heater, ("a" circuit) (CERN lead #1+) |
| | | | | | |
| M22 | 1 | Empty | Empty | | No Connection |
| M22 | 2 | H1bQ3 | YT1123+ | HB1 | Q3 Protection (Strip) Heater, ("b" circuit) (CERN lead #2+) |
| M22 | 3 | Empty | Empty | | No Connection |
| M22 | 4 | H2aQ3 | YT1113- | HA2 | Q3 Protection (Strip) Heater, ("a" circuit) (CERN lead #1-) |
| M22 | 5 | Empty | Empty | | No Connection |
| | | | | | |
| M23 | 1 | H2bQ3 | YT1123- | HB2 | Q3 Protection (Strip) Heater, ("b" circuit) (CERN lead #2-) |
| M23 | 2 | Empty | Empty | | No Connection |
| M23 | 3 | Empty | Empty | | No Connection |
| M23 | 4 | Empty | Empty | | No Connection |
| M23 | 5 | Empty | Empty | | No Connection |
| | | | | | |

| Module | Pin | Fermilab Label | CERN Label | KEK Label | Description |
|---|---|---|---|---|---|
| M24 | 1 | | | | Blank Module |
| M24 | 2 | | | | |
| M24 | 3 | | | | |
| M24 | 4 | | | | |
| M24 | 5 | | | | |
| **Note: Pin Numbers of Module M25 are not listed in numerical order.** | | | | | |
| M25 | 1 | TaQ1_I+ | TT8311 I+ | | Q1 RTD, primary Wire color: Yellow |
| M25 | 2 | TaQ1_I- | TT8311 I- | | Q1 RTD, primary Wire color: Green |
| M25 | 3 | TaQ1_V+ | TT8311 U+ | | Q1 RTD, primary Wire color: Black |
| M25 | 4 | TaQ1_V- | TT8311 U- | | Q1 RTD, primary Wire color: Red |
| M25 | 5 | TbQ1_I+ | TT8321 I+ | | Q1 RTD, redundant: Wire color: Yellow |
| M25 | 6 | TbQ1_I- | TT8321 I- | | Q1 RTD, redundant: Wire color: Green |
| M25 | 11 | TbQ1_V+ | TT8321 U+ | | Q1 RTD, redundant: Wire color: Black |
| M25 | 10 | TbQ1_V- | TT8321 U- | | Q1 RTD, redundant: Wire color: Red |
| M25 | 9 | TaQ2a_I+ | TT8312 I+ | | Q2a RTD, primary Wire color: Yellow |
| M25 | 8 | TaQ2a_I- | TT8312 I- | | Q2a RTD, primary Wire color: Green |
| M25 | 7 | TaQ2a_V+ | TT8312 U+ | | Q2a RTD, primary Wire color: Black |
| M25 | 12 | TaQ2a_V- | TT8312 U- | | Q2a RTD, primary Wire color: Red |
| M25 | 13 | TbQ2a_I+ | TT8322 I+ | | Q2a RTD, redundant: Wire color: Yellow |
| M25 | 14 | TbQ2a_I- | TT8322 I- | | Q2a RTD, redundant: Wire color: Green |
| M25 | 15 | TbQ2a_V+ | TT8322 U+ | | Q2a RTD, redundant: Wire color: Black |
| M25 | 16 | TbQ2a_V- | TT8322 U- | | Q2a RTD, redundant: Wire color: Red |
| M25 | 17 | Empty | Empty | | No connection |
| **Note: Pin Numbers of Module M26 are not listed in numerical order.** | | | | | |
| M26 | 1 | TaQ2b_I+ | TT8332 I+ | | Q2b RTD, primary Wire color: Yellow |
| M26 | 2 | TaQ2b_I- | TT8332 I- | | Q2b RTD, primary Wire color: Green |
| M26 | 3 | TaQ2b_V+ | TT8332 U+ | | Q2b RTD, primary Wire color: Black |
| M26 | 4 | TaQ2b_V- | TT8332 U- | | Q2b RTD, primary Wire color: Red |
| M26 | 5 | TbQ2b_I+ | TT8342 I+ | | Q2b RTD, redundant: Wire color: Yellow |
| M26 | 6 | TbQ2b_I- | TT8342 I- | | Q2b RTD, redundant: Wire color: Green |
| M26 | 11 | TbQ2b_V+ | TT8342 U+ | | Q2b RTD, redundant: Wire color: Black |
| M26 | 10 | TbQ2b_V- | TT8342 U- | | Q2b RTD, redundant: Wire color: Red |
| M26 | 9 | TaQ3_I+ | TT8313 I+ | | Q3 RTD, primary Wire color: Yellow |
| M26 | 8 | TaQ3_I- | TT8313 I- | | Q3 RTD, primary Wire color: Green |
| M26 | 7 | TaQ3_V+ | TT8313 U+ | | Q3 RTD, primary Wire color: Black |
| M26 | 12 | TaQ3_V- | TT8313 U- | | Q3 RTD, primary Wire color: Red |
| M26 | 13 | TbQ3_I+ | TT8323 I+ | | Q3 RTD, redundant: Wire color: Yellow |
| M26 | 14 | TbQ3_I- | TT8323 I- | | Q3 RTD, redundant: Wire color: Green |
| M26 | 15 | TbQ3_V+ | TT8323 U+ | | Q3 RTD, redundant: Wire color: Black |
| M26 | 16 | TbQ3_V- | TT8323 U- | | Q3 RTD, redundant: Wire color: Red |
| M26 | 17 | Empty | Empty | | No connection |

# Hypertronics Connector Pin Locations (Q3 non-IP end)
## VIEW: Male (pin) solder cup side

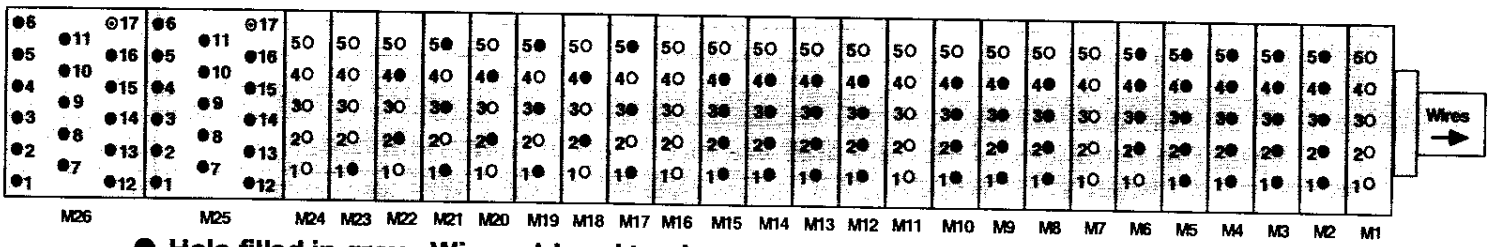


- ● **Hole filled in grey: Wire soldered to pin.**
- ⊙ **Hole with dot in center: Pin exists but no wire soldered to it.**
- ○ **Hole filled in white: No pin. Hole is drilled out.**

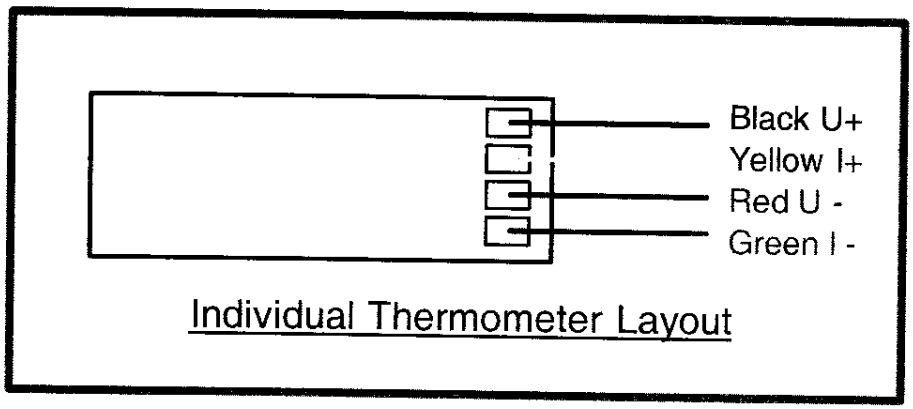


**Note(s):**

**Ensure the Hypertronics cover has NOT been installed.**

Technician(s) — Date 5/24/05

Resp. Auth / Physicist — DATE 24-MAY-2005

22.2 Assemble/Install Hypertronics Connectors, **without Cover** at **IP End** as per Q3 Module Assembly (ME-369900). Pin Numbers for connectors are shown in Table 22.2 below.

# Table 22.2

| Module | Pin | Fermilab Label | CERN Label | KEK Label | Description |
|---|---|---|---|---|---|
| M1 | 1 | | | | Blank Module |
| M1 | 2 | | | | |
| M1 | 3 | | | | |
| M1 | 4 | | | | |
| M1 | 5 | | | | |
| | | | | | |
| M2 | 1 | VTa1Q1 | EE1111 | a1 | Q1 Lead Voltage Tap "a" , primary |
| M2 | 2 | VTa2Q1 | EE1121 | a2 | Q1 Lead Voltage Tap "a", redundant |
| M2 | 3 | VTc1Q1 | EE1211 | c1 | Q1 Center Voltage Tap "c", primary |
| M2 | 4 | VTc2Q1 | EE1221 | c2 | Q1 Center Voltage Tap "c", redundant |
| M2 | 5 | VTb1Q1 | EE1311 | b1 | Q1 Lead Voltage Tap "b", primary |
| | | | | | |
| M3 | 1 | VTc1Q2a | EE1212 | | Q2a Center Voltage Tap "c", primary |
| M3 | 2 | Empty | Empty | | No connection |
| M3 | 3 | VTa2Q2a | EE1122 | | Q2a lead Voltage Tap "a", redundant |
| M3 | 4 | VTa1Q2a | EE1112 | | Q2a Lead Voltage Tap "a", primary |
| M3 | 5 | VTb2Q1 | EE1321 | b2 | Q1 Lead Voltage Tap "b", redundant |
| | | | | | |
| M4 | 1 | VTc2Q2a | EE1222 | | Q2a Center Voltage Tap "c", redundant |
| M4 | 2 | Empty | Empty | | No connection |
| M4 | 3 | VTb1Q2a | EE1312 | | Q2a Lead Voltage Tap "b", primary |
| M4 | 4 | VTb2Q2a | EE1322 | | Q2a Lead Voltage Tap "b", redundant |
| M4 | 5 | VTb1Q2b | EE1612 | | Q2b lead Voltage Tap "b", primary |
| | | | | | |
| M5 | 1 | Empty | Empty | | No connection |
| M5 | 2 | VTc2Q2b | EE1522 | | Q2b Center Voltage Tap "c", redundant |
| M5 | 3 | VTc1Q2b | EE1512 | | Q2b Center Voltage Tap "c", primary |
| M5 | 4 | Empty | Empty | | No connection |
| M5 | 5 | VTb2Q2b | EE1622 | | Q2b Lead Voltage Tap "b" redundant |
| | | | | | |
| M6 | 1 | VTa1Q2b | EE1412 | | Q2b Lead Voltage Tap "a", primary |
| M6 | 2 | VTa2Q2b | EE1422 | | Q2b Lead Voltage Tap "a", redundant |
| M6 | 3 | Empty | Empty | | No connection |
| M6 | 4 | Empty | Empty | | No connection |
| M6 | 5 | Empty | Empty | | No connection |
| | | | | | |
| M7 | 1 | | | | Blank Module |
| M7 | 2 | | | | |
| M7 | 3 | | | | |
| M7 | 4 | | | | |
| M7 | 5 | | | | |
| | | | | | |

# Table 22.2 (continued)

| Module | Pin | Fermilab Label | CERN Label | KEK Label | Description |
|---|---|---|---|---|---|
| M8 | 1 | VTH1 | EE8121 | | Corrector voltage tap Q1-H1 (skew dipole) (on MCBX, MCBXH, A+ lead) |
| M8 | 2 | VTV1 | EE8111 | | Corrector voltage tap Q1-V1 (normal dipole) (on MCBX, MCBXV A+ lead) |
| M8 | 3 | VTH2 | EE8122 | | Corrector voltage tap Q2-H2 (skew dipole) (on MCBX, MCBXH, A+ lead) |
| M8 | 4 | VTV2 | EE8112 | | Corrector voltage tap Q2-V2 (normal dipole) (on MCBX, MCBXV, A+ lead) |
| M8 | 5 | Empty | Empty | | No connection |
| | | | | | |
| M9 | 1 | | | | Blank Module |
| M9 | 2 | | | | |
| M9 | 3 | | | | |
| M9 | 4 | | | | |
| M9 | 5 | | | | |
| | | | | | |
| M10 | 1 | W1aQ1 | EH8311+ | | Q1 Cryogenic Heater lead end - wire at top (CERN #1 I+) |
| M10 | 2 | W2aQ1 | EH8311- | | Q1 Cryogenic Heater lead end - wire at bottom (CERN #1 I-) |
| M10 | 3 | W1bQ1 | EH8321+ | | Q1 Cryogenic Heater non-lead end - wire at top (CERN #2 I+) |
| M10 | 4 | W2bQ1 | EH8321- | | Q1 Cryogenic Heater non-lead end - wire at bottom (CERN #2 I-) |
| M10 | 5 | Empty | Empty | | No connection |
| | | | | | |
| M11 | 1 | W1aQ2A | EH8312+ | | Q2A Cryogenic Heater lead end - wire toward cold mass end plate (CERN #1 I+) |
| M11 | 2 | W2aQ2A | EH8312- | | Q2A Cryogenic Heater lead end - wire toward cold mass mag center (CERN #1 I-) |
| M11 | 3 | W1bQ2A | EH8322+ | | Q2A Cryogenic Heater non-lead end- wire toward cold mass end plate (CERN #2 I+) |
| M11 | 4 | W2bQ2A | EH8322- | | Q2A Cryogenic Heater non-lead end- wire toward cold mass mag center (CERN #2 I-) |
| M11 | 5 | Empty | Empty | | No connection |
| | | | | | |
| M12 | 1 | W1aQ2B | EH8332+ | | Q2B Cryogenic Heater lead end - wire toward cold mass end plate (CERN #1 I+) |
| M12 | 2 | W2aQ2B | EH8332- | | Q2B Cryogenic Heater lead end - wire toward cold mass mag center (CERN #1 I-) |
| M12 | 3 | W1bQ2B | EH8342+ | | Q2B Cryogenic Heater non-lead end- wire toward cold mass end plate (CERN #2 I+) |
| M12 | 4 | W2bQ2B | EH8342- | | Q2B Cryogenic Heater non-lead end- wire toward cold mass mag center (CERN #2 I-) |
| M12 | 5 | Empty | Empty | | No connection |
| | | | | | |

# Table 22.2 (continued)

| Module | Pin | Fermilab Label | CERN Label | KEK Label | Description |
|---|---|---|---|---|---|
| M13 | 1 | | | | Blank Module |
| M13 | 2 | | | | |
| M13 | 3 | | | | |
| M13 | 4 | | | | |
| M13 | 5 | | | | |
| | | | | | |
| M14 | 1 | H1aQ1 | YT1111+ | HA1 | Q1 Protection (Strip) Heater, ("a" circuit) (CERN lead |
| M14 | 2 | Empty | Empty | | No connection |
| M14 | 3 | H2aQ1 | YT1111- | HA2 | Q1Protection (Strip) Heater, ("a" circuit) (CERN lead #1- |
| M14 | 4 | Empty | Empty | | No connection |
| M14 | 5 | H1bQ1 | YT1121+ | HB1 | Q1 Protection (Strip) Heater, ("b" circuit) (CERN lead |
| | | | | | |
| M15 | 1 | Empty | Empty | | No connection |
| M15 | 2 | H1aQ2a | YT1112+ | | Q2a Protection (Strip) Heater, 1-4 & 2-3 circuit (FNAL lead A+) (CERN lead #1+) |
| M15 | 3 | Empty | Empty | | No connection |
| M15 | 4 | H2bQ1 | YT1121- | HB2 | Q1 Protection (Strip) Heater, ("b" circuit) (CERN lead |
| M15 | 5 | Empty | Empty | | No connection |
| | | | | | |
| M16 | 1 | H2aQ2a | YT1112- | | Q2a Protection (Strip) Heater, 1-4 & 2-3 circuit (FNAL lead A-) (CERN lead #1-) |
| M16 | 2 | Empty | Empty | | No connection |
| M16 | 3 | H1bQ2a | YT1122+ | | Q2a Protection (Strip) Heater, 1-2 & 3-4 circuit (FNAL lead B+) (CERN lead#2+) |
| M16 | 4 | Empty | Empty | | No connection |
| M16 | 5 | H2bQ2a | YT1122- | | Q2a Protection (Strip) Heater, 1-2 & 3-4 circuit (FNAL lead B-) (CERN lead #2-) |
| | | | | | |
| M17 | 1 | Empty | Empty | | No connection |
| M17 | 2 | H2aQ2b | YT1132- | | Q2b Protection (Strip) Heater, 1-4 & 2-3 circuit (FNAL lead A-) (CERN lead #1-) |
| M17 | 3 | Empty | Empty | | No connection |
| M17 | 4 | H1aQ2b | YT1132+ | | Q2b Protection (Strip) Heater, 1-4 & 2-3 circuit (FNAL lead A+) (CERN lead #1+) |
| M17 | 5 | Empty | Empty | | No connection |
| | | | | | |
| M18 | 1 | H1bQ2b | YT1142+ | | Q2b Protection (Strip) Heater, 1-2 & 3-4 circuit (FNAL lead B+) (CERN lead#2+) |
| M18 | 2 | Empty | Empty | | No connection |
| M18 | 3 | H2bQ2b | YT1142- | | Q2b Protection (Strip) Heater, 1-2 & 3-4 circuit (FNAL lead B-) (CERN lead #2-) |
| M18 | 4 | Empty | Empty | | No connection |
| M18 | 5 | Empty | Empty | | No connection |
| | | | | | |
| M19 | 1 | | | | Blank Module |
| M19 | 2 | | | | |
| M19 | 3 | | | | |
| M19 | 4 | | | | |
| M19 | 5 | | | | |

# Table 22.2 (continued)

| Module | Pin | Fermilab Label | CERN Label | KEK Label | Description |
|---|---|---|---|---|---|
| **NOTE: PIN NUMBERS OF MODULE M20 ARE NOT LISTED IN NUMERICAL ORDER.** | | | | | |
| M20 | 1 | TaQ1_I+ | TT8311 I+ | | Q1 RTD, primary Wire color: Yellow |
| M20 | 2 | TaQ1_I- | TT8311 I- | | Q1 RTD, primary Wire color: Green |
| M20 | 3 | TaQ1_V+ | TT8311 U+ | | Q1 RTD, primary Wire color: Black |
| M20 | 4 | TaQ1_V- | TT8311 U- | | Q1 RTD, primary Wire color: Red |
| M20 | 5 | TbQ1_I+ | TT8321 I+ | | Q1 RTD, redundant: Wire color: Yellow |
| M20 | 6 | TbQ1_I- | TT8321 I- | | Q1 RTD, redundant: Wire color: Green |
| M20 | 11 | TbQ1_V+ | TT8321 U+ | | Q1 RTD, redundant: Wire color: Black |
| M20 | 10 | TbQ1_V- | TT8321 U- | | Q1 RTD, redundant: Wire color: Red |
| M20 | 9 | TaQ2a_I+ | TT8312 I+ | | Q2a RTD, primary Wire color: Yellow |
| M20 | 8 | TaQ2a_I- | TT8312 I- | | Q2a RTD, primary Wire color: Green |
| M20 | 7 | TaQ2a_V+ | TT8312 U+ | | Q2a RTD, primary Wire color: Black |
| M20 | 12 | TaQ2a_V- | TT8312 U- | | Q2a RTD, primary Wire color: Red |
| M20 | 13 | TbQ2a_I+ | TT8322 I+ | | Q2a RTD, redundant: Wire color: Yellow |
| M20 | 14 | TbQ2a_I- | TT8322 I- | | Q2a RTD, redundant: Wire color: Green |
| M20 | 15 | TbQ2a_V+ | TT8322 U+ | | Q2a RTD, redundant: Wire color: Black |
| M20 | 16 | TbQ2a_V- | TT8322 U- | | Q2a RTD, redundant: Wire color: Red |
| M20 | 17 | Empty | Empty | | No connection |
| **NOTE: PIN NUMBERS OF MODULE M21 ARE NOT LISTED IN NUMERICAL ORDER.** | | | | | |
| M21 | 1 | TaQ2b_I+ | TT8332 I+ | | Q2b RTD, primary Wire color: Yellow |
| M21 | 2 | TaQ2b_I- | TT8332 I- | | Q2b RTD, primary Wire color: Green |
| M21 | 3 | TaQ2b_V+ | TT8332 U+ | | Q2b RTD, primary Wire color: Black |
| M21 | 4 | TaQ2b_V- | TT8332 U- | | Q2b RTD, primary Wire color: Red |
| M21 | 5 | TbQ2b_I+ | TT8342 I+ | | Q2b RTD, redundant: Wire color: Yellow |
| M21 | 6 | TbQ2b_I- | TT8342 I- | | Q2b RTD, redundant: Wire color: Green |
| M21 | 11 | TbQ2b_V+ | TT8342 U+ | | Q2b RTD, redundant: Wire color: Black |
| M21 | 10 | TbQ2b_V- | TT8342 U- | | Q2b RTD, redundant: Wire color: Red |
| M21 | 9 | Empty | Empty | | No connection |
| M21 | 8 | Empty | Empty | | No connection |
| M21 | 7 | Empty | Empty | | No connection |
| M21 | 12 | Empty | Empty | | No connection |
| M21 | 13 | Empty | Empty | | No connection |
| M21 | 14 | Empty | Empty | | No connection |
| M21 | 15 | Empty | Empty | | No connection |
| M21 | 16 | Empty | Empty | | No connection |
| M21 | 17 | Empty | Empty | | No connection |

# Hypertronics Connector Pin Locations Q3 Lead (IP) End
## VIEW: Female (receptacle) solder cup side

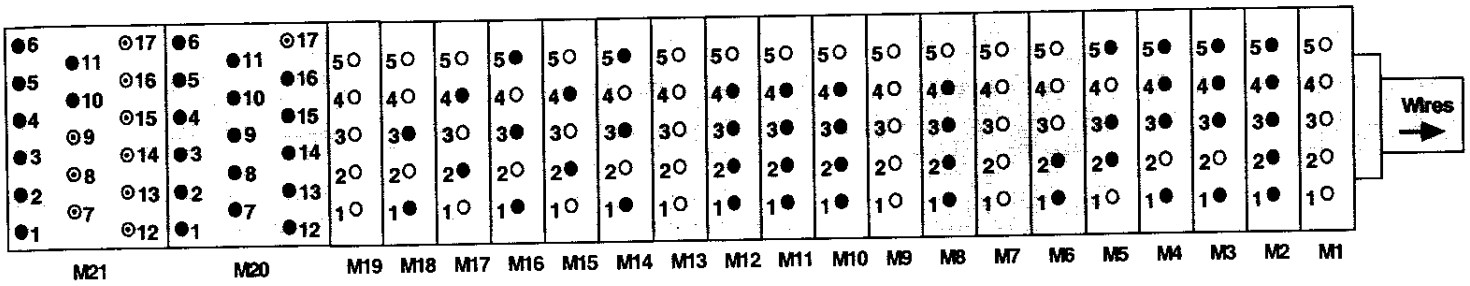


● Hole filled in grey: Wire soldered to pin.
⊙ Hole with dot in center: Pin exists but no wire soldered to it.
○ Hole filled in white: No pin. Hole is drilled out.

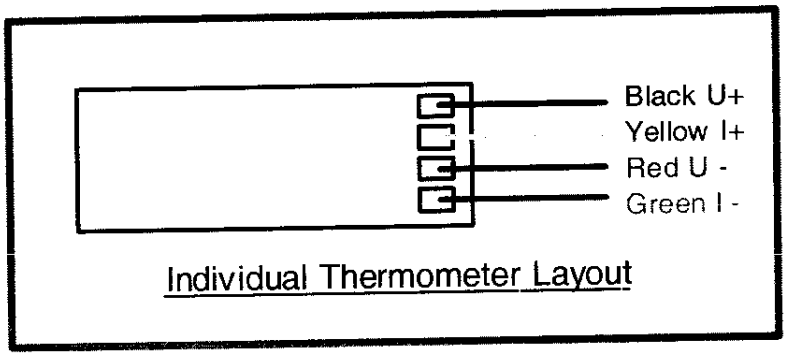


**Note(s):**

**Ensure the Hypertronics cover has NOT been installed.**

Technician(s) _____ Date 5/24/2005

22.3 Inspect Hypertronics Connector. Ensure that it is free of flux and that Kapton has been installed properly.

Responsible Authority/Physicist _____ Date 24-MAY-2005

22.4 After LHC Project Physicist / designee has signed the above step, complete the installation of the Hypertronics.

Technician(s) _____ Date 5/25/05

23.0 Final Electrical Inspection

23.1 Perform an electrical inspection on each of the Individual Quadrants and the Cold Mass. Refer to the Valhalla and Leader Free Standing Coil Measurement Procedure (ES-292306).

**To measure the Resistance of a Q3 Cold Mass:**

1. Use Valhalla Scientific 4300B digital micro-ohmmeter.
2. Set Test Current to 0.1 amp.
3. Set Scale to 2V full scale.
4. Turn temperature compensation on.
5. Turn test current off.
6. Connect $I_{HI}$ to "A" Lead as shown in figure 23.1-A.
7. Connect $I_{LO}$ to "B" Lead as shown in figure 23.1-A.
8. Turn test current on.
9. Connect $V_{HI}$ and $V_{LO}$ to voltage taps as shown in resistance table.
10. To measure Total with leads, connect $V_{HI}$ to "A" Lead and $V_{LO}$ to "B" Lead.
11. At the IP End, jumper the 8Ka leads as shown in Figure 23.1-A.
12. Read resistance and record in traveler.

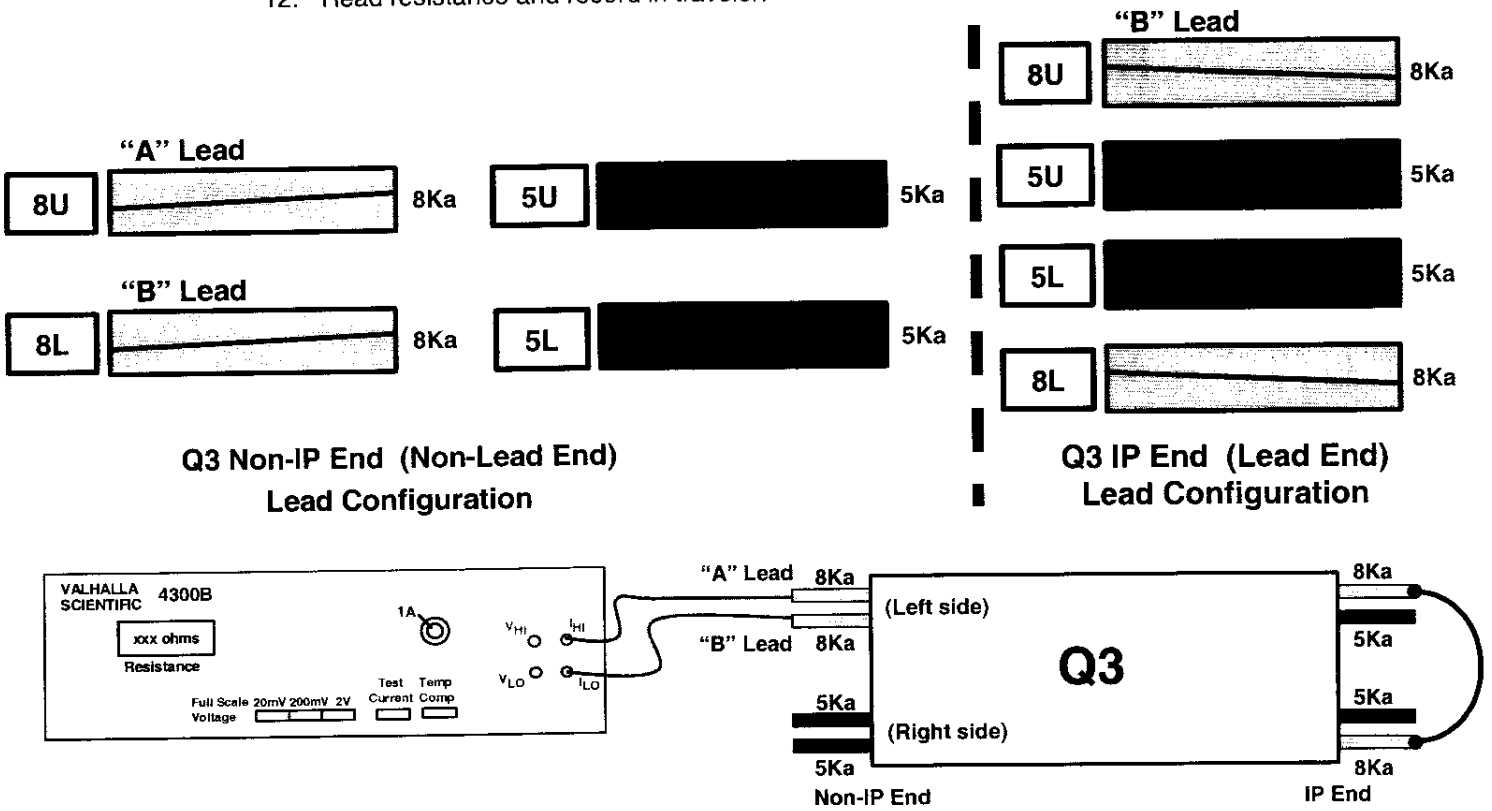


# Figure 23.1-A

| (Q3) Resistance | | | | Nominal 3.35 to 3.45 Ω |
|---|---|---|---|---|
| Voltage Tap Serial Numbers | | | | Total Resistance |
| Connect | Fermi | CERN | KEK | |
| $V_{HI}$ | VTa1Q3 | EE1113 | a1 | 3.42 Ω |
| $V_{LO}$ | VTc1Q3 | EE1213 | c1 | |
| $V_{HI}$ | VTc1Q3 | EE1213 | c1 | 3.42 Ω |
| $V_{LO}$ | VTb1Q3 | EE1313 | b1 | |
| $V_{HI}$ | VTa1Q3 | EE1113 | a1 | 6.84 Ω |
| $V_{LO}$ | VTb1Q3 | EE1313 | b1 | |

| | | Total Resistance with Leads |
|---|---|---|
| | | Nominal 6.75 to 6.85 Ω |
| $V_{HI}$ | Q4 Power Lead | 6.85 Ω |
| $V_{LO}$ | Q3 Power Lead | |

Technician(s)

May 24, 2005
Date

Check resistance of Redundant Voltage Taps.

| Q3 Redundant Voltage Taps | | | | Nominal 3.35 to 3.45 Ω |
|---|---|---|---|---|
| Connect | Fermi | CERN | KEK | Resistance |
| $V_{HI}$ | VTa2Q3 | EE1123 | a2 | 3.42 Ω |
| $V_{LO}$ | VTc2Q3 | EE1223 | c2 | |
| $V_{HI}$ | VTc2Q3 | EE1223 | c2 | 3.42 Ω |
| $V_{LO}$ | VTb2Q3 | EE1323 | b2 | |

Technician(s)

5/24/05
Date

**To measure Ls and Q of a Q3 Cold Mass:**

1. Use Agilent 4263B LCR Meter.
2. Turn power on by pushing line button. Wait 30 seconds until display screen is lit.
3. Recall program #1. To do this, push recall (Rcl), then push #1, then push Enter.
4. Push Auto/Hold button to release hold.
5. Verify that the frequency displayed in the upper right corner of the display screen is 1000 Hz and the level recorded in the lower right corner of the display screen is 1V or 1000 mV.
6. Connect $H_{cur}$ to "A" power lead as shown in figure 6.2-B
7. Connect $L_{cur}$ to "B" power lead as shown in figure 6.2-B.
8. Connect $H_{pot}$ and $L_{pot}$ buttons to voltage taps as shown below.
9. Read Ls and Q from display and record in table.

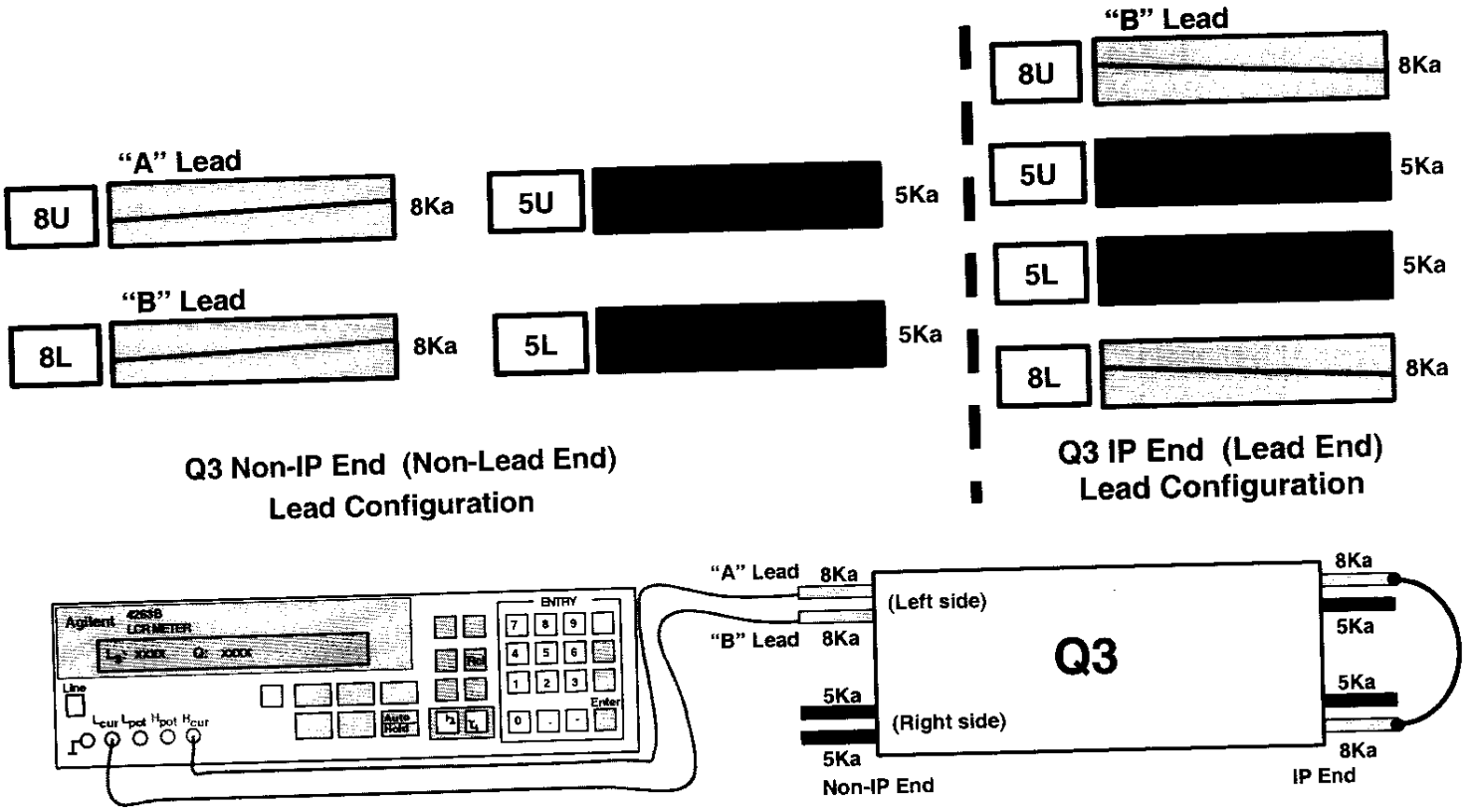


# Figure 23.1-B

| (Q3) Inductance | | | | Nominal 15 to 16 mH |
|---|---|---|---|---|
| Voltage Tap Serial Numbers | | | | Total Inductance |
| Connect | Fermi | CERN | KEK | |
| $H_{POT}$ | VTa1Q3 | EE1113 | a1 | 15.319 mH |
| $L_{POT}$ | VTc1Q3 | EE1213 | c1 | |
| $H_{POT}$ | VTc1Q3 | EE1213 | c1 | 15.334 mH |
| $L_{POT}$ | VTb1Q3 | EE1313 | b1 | |

| | | | | Nominal 30 to 32 mH |
|---|---|---|---|---|
| | | | | Total Inductance |
| $H_{POT}$ | VTa1Q3 | EE1113 | a1 | 30.645 mH |
| $L_{POT}$ | VTb1Q3 | EE1313 | b1 | |

| (Q3) Q-Factor | | | | Nominal 1.0 to 1.2 |
|---|---|---|---|---|
| Voltage Tap Serial Numbers | | | | Total Q |
| Connect | Fermi | CERN | KEK | |
| $H_{POT}$ | VTa1Q3 | EE1113 | a1 | 1.0 |
| $L_{POT}$ | VTc1Q3 | EE1213 | c1 | |
| $H_{POT}$ | VTc1Q3 | EE1213 | c1 | 1.0 |
| $L_{POT}$ | VTb1Q3 | EE1313 | b1 | |

| | | | | Nominal 1.0 to 1.2 |
|---|---|---|---|---|
| | | | | Total Q |
| $H_{POT}$ | VTa1Q3 | EE1113 | a1 | 1.0 |
| $L_{POT}$ | VTb1Q3 | EE1313 | b1 | |

Technician(s)

5/25/05
Date

**To measure the resistance of a Thermometer (RTD):**

1. Use Hewlett Packard HP3457A digital multimeter.
2. Record temperature of building within +/- 5 degrees.
3. Press line button to turn line on.
4. Connect wires as shown in Figure below.
   U+ (Black) to Sense HI
   I+ (Yellow) to Input HI
   U- (Red) to Sense LO
   I- (Green) to Input LO
5. Push blue button (function key) once.
6. Push OHMF button.
7. Verify arrow in readout is above the 4WΩ (meaning a 4 wire resistance measurement).
8. Read resistance in ohms and record in traveler.

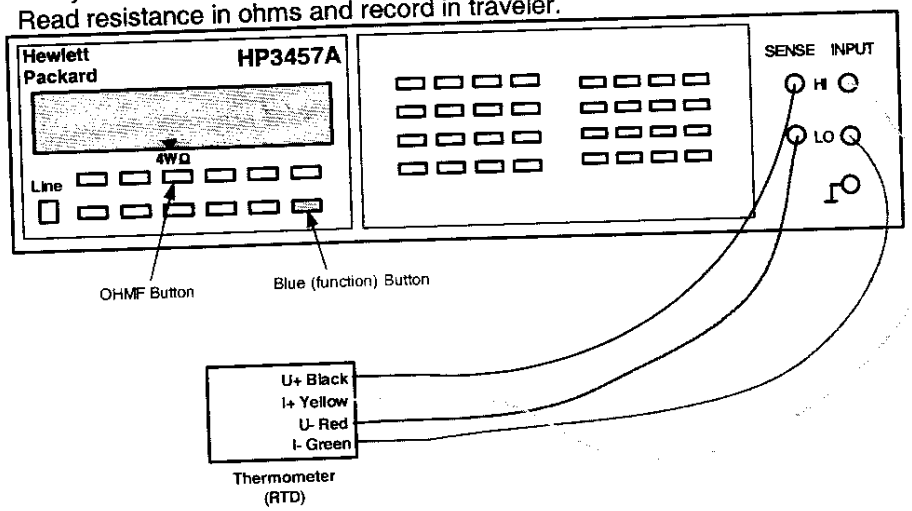


**To measure the resistance of a Cryogenic (Warm-up) Heater**

1. Use Hewlett Packard HP3457A digital multimeter.
2. Record temperature of building within +/- 5 degrees.
3. Press line button to turn line on.
4. Connect wires as shown in Figure below.
5. Push blue button (function key) once.
6. Push OHMF button.
7. Verify arrow in readout is above the 4WΩ (meaning a 4 wire resistance measurement).
   **Note: Although this is technically a 4 wire measurement, it is effectively a 2 wire measurement, since there are only 2 wires connected to each heater.**
8. Read resistance in ohms and record in traveler.

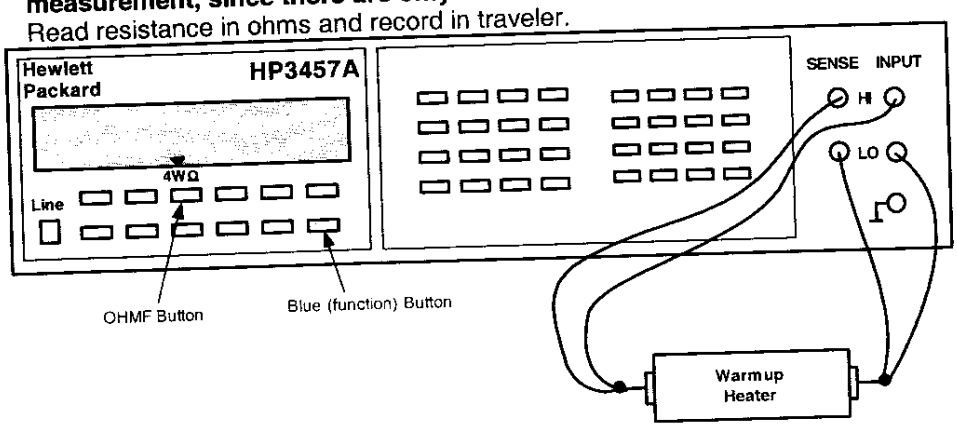

23.2 Hipot according to table below. Hipot to 3kV. Maximum leakage is 3μA.

STOP

**Have Crew Chief verify setup and sign below before continuing.**

Crew Chief _____ Date _____

**Hipot Heaters to Coil and Ground.**

| High Potential | Grounded | Floating | Leakage |
|---|---|---|---|
| All Strip Heaters | Coils, Yoke, Q3 Instrumentation Bus, Lead and Corrector Coil Busses, RTD's and Warm-up Heaters | Nothing | 346nA |

Steve Gould

DR# HGQ-0577 (4243)

**Hipot Coil to Heaters and Ground.**

| High Potential | Grounded | Floating | Leakage |
|---|---|---|---|
| All Coils | Strip Heaters, Yoke, Q3 Instrumentation Bus, 8kA and 5kA Lead Busses and Corrector Coil Busses, RTD's and Warm-up Heaters | Nothing | |

Technician(s) _____ Date _____

STOP

23.3 Ensure electrical measurements are acceptable and confirm Hypertronics Connector has been installed properly.

Responsible Authority/Physicist _____ Date _____

24.0 Production Complete

24.1 Process Engineering verify that the Q3 Cold Mass Module Assembly Traveler (5520-TR-333729) is accurate and complete. This shall include a review of all steps to ensure that all operations have been completed and signed off. Ensure that all Discrepancy Reports, Nonconformance Reports, Repair/Rework Forms, Deviation Index and dispositions have been reviewed by the Responsible Authority for conformance before being approved.

Comments:

Process Engineer/Designee

5/24/06
Date

# TD - Engineering Fabri ion Component Kit List

ORIGINAL

**Process Engineering**

Component Serial No. LMQXC03
Kit submitted by: John Szostak Ext. 2003
Fermi ID No. 02943C
Date submitted: 22-Feb-05
Need date: 4-Mar-05
Deliver to: ICB
Use with Traveler No. 333729
Job No. 248
M&S task number: 300 1.1.1.3.4
Drawing Title: Q3 MODULE ASSEMBLY
Drawing No. ME-369900 Rev. A
Drawing Title: Q3 COLD MASS WELDED ASSEMBLY
Drawing No. ME-390529 Rev. C

**Material Control**

**Parts available**

Verified by: M. Schmidt
Fermi ID No. 04223N
Date submitted to stockroom: 1-Mar-05

**Parts issued**

Issued by:
Fermi ID No. 12742
Date issued: 3-4-05
Parts received by E&F: J. Szostak
Fermi ID No. 02943C
Date received by E&F: 3/4/05

| | Description | Dwg Size | Number | Rev | Unit | Quantity Required | Location | Quantity Issued | E&F Verified | Routing Form Number | Spares Number / Comment |
|---|---|---|---|---|---|---|---|---|---|---|---|
| 1 | 26 GA. POLYMIDE COATED WIRE (FOR VOLTAGE TAPS) | MA | 369832 | * | EA | 8 | ICB HAS | | | | |
| 2 | 20 GA. POLYMIDE COATED CABLE (FOR STRIP HTRS & WARMUP HTRS) | MA | 369833 | * | EA | 6 | ICB HAS | | | | |
| 3 | WARM-UP HEATER | MA | 369834 | A | EA | 2 | IB4 Bin | 2 | | 82882 | OK 33 pcs. |
| 4 | RTD ASSEMBLY | MA | 369835 | A | EA | 2 | R2,S2,L5 | 2 | | 79920 | 22 pcs. |
| 5 | 30 GA. POLYMIDE COATED CABLE (FOR RTD WIRE EXTENSIONS) | MA | 369836 | * | - | A/R | | | | | |
| 6 | RTD MOUNTING BLOCK | MB | 369893 | B | EA | 2 | IB4 Bin | 2 | | 80543 | 20 pcs. |
| 7 | .010" SOLDER STRIP | MA | 369904 | * | m | 1 | M14,2 | 1 | | 78514 | 4 pcs. |
| 8 | KESTER 135 FLUX | MA | 369911 | * | | A / R | | | | | |
| 9 | KEVLAR YARN | MA | 369912 | * | - | A/R | | | | | |
| 10 | SHCS #4-40 x 1/4" LG. S.S. | MA | 369938 | * | EA | 4 | IB4 Bin | 4 | | 79038 | 100 pcs. |
| 11 | WARM-UP HEATER BASE PLATE | MA | 369997 | A | EA | 2 | IB4 Bin | 2 | | 80096 | 18 pcs. |

(TS? Need 5 m)

ORIGINAL

## TD - Engineering Fabri ion Component Kit List

| | Description | Dwg Size | Number | Rev | Unit | Quantity Required | Location | Quantity Issued | E&F Verified | Routing Form Number | Spares Number / Comment |
|---|---|---|---|---|---|---|---|---|---|---|---|
| 12 | MQXA (Q1&Q3) INTERFACE SPECIFICATION | ME | 390108 | E | - | ICB HAS | | | | | |
| 13 | MCSOX (NON-IP) CORRECTOR MOUNTING RING | ME | 390664 | * | EA | ICB HAS | | | | | |
| 14 | NON-IP END BODY EXTENSION WELDMENT | ME | 390667 | * | EA | 1 | Site 38 | 1 | | 81846 | 7 pcs. |
| 15 | Q3 COLDMASS NON-IP END DOME WELDMENT - MODIFIED | ME | 390668 | * | | ICB HAS | | | | | |
| 16 | SHCS M8 x 1.25 x 50mm LG S.S. | MA | 393020 | * | EA | 1 | IB4 Bin | 1 | | 82378 | 136 pcs. |
| 17 | SHCS #6-32 UNC x 1 LG S.S. | MA | 393082 | * | EA | 4 | IB4 Bin | 4 | | 81360 | 78 pcs. |
| 18 | NUT, HEX #6-32 UNC S.S. | MA | 393089 | * | EA | 4 | IB4 Bin | 4 | | 82599 | 154 pcs. |
| 19 | FHSCS M8 x 18mm LG S.S. | MA | 393175 | * | EA | 2 | IB4 Bin | 2 | | 82114 | 94 pcs. |
| 20 | #10-32 x 5/8" LONG SHCS - S.S. | MA | 393176 | * | EA | 2 | IB4 | 2 | | 82115 | 98 pcs. |
| 21 | RTD SCREWS | MA | 393180 | * | EA | 4 | IB4 Bin | 4 | | 79631 | 701 pcs. |
| 22 | RTD WASHERS | MA | 393181 | * | EA | 4 | IB4 Bin | 4 | | 81827 | 150 pcs. |
| 23 | SHCS, 5/16-18 UNC x 1 1/4 LG S.S. (FOR SPLICE HOUSING) | MA | 393263 | * | EA | 8 | IB4 Bin | 5 | | 81437 | 5 pcs. |
| 24 | SCREW, FLAT HEAD SOCKET M12 x 1.75 x 20mm LG S.S. | MA | 393291 | * | EA | 2 | IB4 Bin | 2 | | 80694 | 88 pcs. |
| 25 | HHCS M4 x .7 x 20mm LG S.S. | MA | 393404 | * | EA | 4 | R1,2,2 | 4 | | 82279 | 150 pcs. |
| 26 | FHSCS 1/4-28 UNF x 1/2 LG S.S. | MA | 393405 | * | EA | 4 | R1,2,2 | 4 | | 82445 | 146 pcs. |
| 27 | SHCS M8 x 1.25 x 40mm LG S.S. | MA | 393409 | * | EA | 1 | IB4 Bin | 1 | | 82393 | 100 pcs. |
| 28 | SHCS 1/4-20 UNC x 1.00 LG S.S. | MA | 393422 | * | EA | 4 | R1,2,2 | 4 | | 82395 | 100 pcs. |
| 29 | SHCS, 5/16-18 UNC-2A x 1.00 LG S.S. | MA | 393431 | * | EA | 2 | IB4 Bin | 2 | | 82757 | 50 pcs. |
| 30 | SHCS, M6 x 20mm LG S.S. | MA | 393444 | * | EA | 4 | IB4-Bin ~~R1,2,2~~ | 4 | | 82758 | 100 pcs. |
| 31 | IP (LEAD) END BUS SPLICE CLAMP ASSEMBLY / Q3 | MD | 430031 | B | EA | 1 | R1,3,2 | 1 | | 81915 | 7 pcs. |

ORIGINAL

# TD - Engineering Fabri ion Component Kit List

| | Description | Dwg Size | Number | Rev | Unit | Quantity Required | Location | Quantity Issued | E&F Verified | Routing Form Number | Spares Number / Comment |
|---|---|---|---|---|---|---|---|---|---|---|---|
| 32 | NOMEX STRIP - .010" THICK | MB | 430064 | * | | ICB HAS | | | | | |
| 33 | LEAD & CORRECTOR COIL BUS ASSEMBLY | MD | 430065 | A | EA | 1 | ICB HAS | | | | |
| 34 | Q3 BUS HOUSING TRAY - SHORT | MD | 430066 | * | EA | 1 | R1,3,2 | 1 | | 81772 | 6 pcs. |
| 35 | Q3 BUS HOUSING TRAY | MD | 430006 | * | EA | 5 | R1,2,1 | 5 | | 80469 | 37 pcs. |
| 36 | FACE PLATE FOR MCBXA CORRECTOR LEADS | MD | 430083 | A | EA | 1 | R1,3,3 | 1 | | 82368 | 6 pcs. |
| 37 | CORRECTOR WIRE CHANNEL BLOCK | MB | 430091 | * | EA | 2 | R2,2,2 | 2 | | 82010 | 7 pcs. |
| 38 | CORRECTOR WIRE SPLICE CLAMP COVER | MB | 430092 | * | EA | 2 | R2,2,3 | 2 | | 82011 | 7 pcs. |
| 39 | SIDE CABLE CLAMP ASSEMBLY | MC | 430103 | | EA | 2 | R1,3,3 | 2 | | 82012 | 12 pc.s |
| 40 | CENTER CABLE INSULATOR - BOTTOM | MC | 430110 | * | EA | 1 | R2,2,2 | 1 | | 82013 | 15 pcs. |
| 41 | MCSOX SPLICE PLATE MOUNTING BAR | MC | 430128 | A | EA | 2 | R2,2,3 | 2 | | 82318 | 12 pcs. |
| 42 | MCSOX SPLICE PLATE MOUNTING RING | MC | 430129 | * | EA | 1 | R2,2,3 | 1 | | 82144 | 7 pcs. |
| 43 | MCSOX CORRECTOR SPLICE FACE PLATE | MD | 430130 | C | EA | 1 | R1,1,2 | 1 | | 82521 | 7 pcs. |
| 44 | NON-IP (LEAD END) CORRECTOR BUS BUNDLE BRACKET | MC | 430134 | A | EA | 1 | R2,2,3 | 1 | | 81942 | 11 pcs. |
| 45 | CORRECTOR COIL FACE PLATE CLAMP | MB | 430135 | * | EA | 1 | R2,2,3 | 1 | | 81967 | 7 pcs. |
| 46 | HARNESS BLOCK | MB | 430144 | * | EA | 2 | IB4 Bin | 2 | | 82152 | 14 pcs. |
| 47 | INSULATED EXPANSION LOOP TAIL | MB | 430145 | * | EA | 1 | ICB HAS | | | | |
| 48 | VOLTAGE TAPS SPLICE BLOCK | MC | 430146 | * | EA | 1 | R1,3,3 | 1 | | 82314 | 8 pcs. * CHANGE LOCATION |
| 49 | BUS CABLE UPPER SUSPENSION BRACKET WELDMENT | MC | 430159 | A | EA | 1 | R1,3,2 | 1 | | 82448 | 8 pcs. |
| 50 | BUS CABLE UPPER SUSPENSION BRACKET WELDMENT | MD | 430160 | A | EA | 1 | R1,3,2 | 1 | | 82449 | 8 pcs. |
| 51 | CORRECTOR EXPANSION LOOP BUS CLAMP | MB | 430168 | * | EA | 2 | R1,1,3 IB4 Bin | 2 | | 82626 | 16 pcs. ? |

Move to # 1 order

ORIGINAL

# TD - Engineering Fabri ion Component Kit List

| | Description | Dwg Size | Number | Rev | Unit | Quantity Required | Location | Quantity Issued | E&F Verified | Routing Form Number | Spares Number / Comment |
|---|---|---|---|---|---|---|---|---|---|---|---|
| 52 | CONNECTOR, PANDUIT CRIMP SPLICE TYPE 16-22 WIRE GAUGE | FERMI STOCK | #1110-0550 | * | EA | 10 | | | | | |
| 53 | TAPE, ELECTRICAL, GLASS CLOTH "3M SCOTCH #27" 1/2" | FERMI STOCK | #1130-2050 | * | | A/R | | | | | |
| 54 | MQSX CORRECTOR MAGNET | CERN | SUPPLIED | * | | ICB HAS | | | | | |
| 55 | MCSOX CORRECTOR MAGNET | CERN | SUPPLIED | * | | ICB HAS | | | | | |
| 56 | MQSXA CORRECTOR MAGNET | CERN | SUPPLIED | * | | ICB HAS | | | | | |
| 57 | Q3 INSTRUMENTATION WIRE FEEDTHRU ASSEMBLY | MB | 430074 | * | | ICB HAS | | | | | |
| 58 | NON-IP END BUS CROSSOVER BLOCK ASSEMBLY | MD | 430081 | A | EA | 1 | R1,2,5 | 1 | [illegible] | 82624 | 8 pcs. |
| 59 | IP END BUS CROSSOVER BLOCK ASSEMBLY | MD | 430095 | B | EA | 1 | R8,S2,L4 | 1 | [illegible] | 82625 | 9 pcs. |
| 60 | Q3 NON-LEAD END (NON-IP END) SPIDER ASSEMBLY | MB | 430096 | A | EA | 1 | R1,1,1 | 1 | [illegible] | 82581 | 6 pcs. |
| | HYPERTRONICS CONNECTOR ASSEMBLY 28 UNITS - Q3 MAGNET (LEAD END) | MB | 418118 | * | EA | 1 | | | | | Place part #'s 26-35 in one bag and label as MB-418118 |
| 61 | 28 UNIT MALE (PIN) RACK | MA | 418106 | A | EA | 1 | R1,S1,L2 | 1 | [illegible] | N/A | 7 pcs. |
| 62 | TIE-DOWN LINK | MA | 418109 | * | EA | 4 | R1,1,2 | 4 | [illegible] | N/A | 49 pcs. |
| 63 | CLAMPING BAR | MA | 418112 | * | EA | 1 | IB4 Bin | 1 | [illegible] | 75990 | 16 pcs. |
| 64 | GROMMET | MA | 418113 | * | EA | 1 | IB4 Bin | 1 | [illegible] | N/A | 15 pcs. |
| 65 | THREADED STUD ASSEMBLY | MA | 418114 | * | EA | 4 | IB4 Bin | 4 | [illegible] | 81575 | 75 pcs. |
| 66 | SUPPORT ARM WELDMENT (28 UNIT) | MC | 418115 | * | PAIR | 1 | IB4 Bin | 1 PAIR | [illegible] | 80120 | 8 pcs. |
| 67 | SCREW - #6-32 X 3/8 LG. | MA | 418116 | * | EA | 4 | R1,1,2 | 4 | [illegible] | 79892 | 52 pcs. |
| 68 | SCREW - #4-40 X 1/2 LG. | MA | 418117 | * | EA | 4 | R1,1,2 | 4 | [illegible] | 79891 | 124 pcs. |
| 69 | ANTI-ARC KAPTON | MA | 418143 | * | EA | 17 | R1,1,2 | 17 | [illegible] | N/A | 1270 pcs. |
| 70 | CONNECTOR COVER & ACCESS COVER (28-UNITS) | MC | 418067-A2 | * | PAIR | 1 | R1,1,2 | 1 | [illegible] | N/A | 6 pcs. |

ORIGINAL

# TD - Engineering Fabri ion Component Kit List

| | Description | Dwg Size | Number | Rev | Unit | Quantity Required | Location | Quantity Issued | E&F Verified | Routing Form Number | Spares Number / Comment |
|---|---|---|---|---|---|---|---|---|---|---|---|
| HYPERTRONICS CONNECTOR ASSEMBLY 23 UNITS - Q3 MAGNET (RETURN END) | | MB | 418132 | * | EA | 1 | | | | | Place part #'s 36-41 in one bag and label as MB-418132 |
| 71 | CLAMPING BAR | MA | 418112 | * | EA | 1 | IB4 Bin | 1 | | 79990 | 16 pcs. |
| 72 | GROMMET | MA | 418113 | * | EA | 1 | IB4 Bin | 1 | | N/A | 15 pcs. |
| 73 | THREADED STUD ASSEMBLY | MA | 418114 | * | EA | 4 | IB4 Bin | 4 | | 81575 | 75 pcs. |
| 74 | SCREW - #6-32 X 3/8 LG. | MA | 418116 | * | EA | 4 | R1,1,2 | 4 | | 79892 | 52 pcs. |
| 75 | 23 UNIT FEMALE (PIN) RACK | MA | 418136 | A | EA | 1 | R1,S1,L2 | 1 | | N/A | 4 pcs. |
| 76 | CONNECTOR COVER & ACCESS COVER (23-UNITS) | MC | 418067-A | A1 | PAIR | 1 | R1,1,2 | 1 | | N/A | 4 pcs. |
| Q3 LEAD END (IP END) SPIDER ASSEMBLY | | MD | 430072 | A | EA | 1 | | | | | |
| 77 | SHCS #8-32 x .75 LG. S.S. | MA | 393071 | * | EA | 4 | IB4 Bin | 4 | | 81436 | 68 pcs. |
| 78 | SHCS #6-32 x 1.00 LG. S.S. | MA | 393082 | * | EA | 2 | IB4 Bin | 2 | | 81360 | 78 pcs. |
| 79 | WASHER, NARROW, FLAT #6 S.S. | MA | 393088 | * | EA | 2 | IB4 Bin | 2 | | 81361 | 454 pcs. |
| 80 | HEX NUT #6-32 UNC-2B S.S. | MA | 393089 | * | EA | 2 | IB4 Bin | 2 | | 82599 | 154 pcs. |
| 81 | BUS SPIDER ASSEMBLY | MD | 430044 | C | EA | 1 | IB4 Bin | 1 | | 81469 | 29 pcs. |
| 82 | BUS SPIDER HOUSING - BOTTOM | MB | 430055 | A | EA | 1 | IB4 Bin | 1 | | 82766 | 7 pcs. |
| 83 | BUS SPIDER HOUSING - COVER PLATE | MB | 430073 | * | EA | 1 | IB4 Bin | 1 | | 81455 | 7 pcs. |
| 84 | SPIDER BUMPER | MB | 430075 | B | EA | 2 | IB4 Bin | 2 | | 81447 | 122 pcs. |
| 85 | INSULATED BEAM TUBE | MD | 369838 | A | EA | 1 | ICB | | | | 4 pcs. |
| 86 | MCBX CORRECTOR MOUNTING RING | ME | 390037 | C | EA | 1 | P/N | 1 | | 80790 | 9 pcs. |
| 87 | COLD MASS ASSEMBLY (KEK) | ME | 390108 | E | | ICB HAS | | | | | |
| 88 | MQSXA CORRECTOR MOUNTING RING | MD | 390209 | C | EA | 1 | P/N | 1 | | 80791 | 7 pcs. |

ORIGINAL

## TD - Engineering Fabri ion Component Kit List

APR 2 (3)

| | Description | Dwg Size | Number | Rev | Unit | Quantity Required | Location | Quantity Issued | E&F Verified | Routing Form Number | Spares Number / Comment |
|---|---|---|---|---|---|---|---|---|---|---|---|
| 89 | IP END DOME ASSEMBLY | ME | 390221 | C | EA | 1 | P/N | 1 | | 78710 | 7 pcs. |
| 90 | MCBX CORRECTOR MTG FLAT WASHER | MB | 390228 | * | EA | 12 | IB4 Bin | 9 | | 80991 | 9 pcs. |
| 91 | 1/2"-20 UNF X 2.0" LG. SILVER PLATED SCREW FOR Q1/Q3 MQSXA | MA | 390246 | * | EA | 8 | IB4 Bin | 8 | | 74618 | 135 pcs. |
| 92 | 1/2"-20 UNF X 3.0" LG. SILVER PLATED SCREW FOR Q1/Q3 MCBX | MA | 390247 | * | EA | 4 | IB4 Bin | 4 | | 74622 | 55 pcs. |
| 93 | TRANSPORT RESTRAINT ADJ. SCREW | MB | 390270 | A | EA | 4 | IB4 Bin | 4 | | 76665 | 40 pcs. |
| 94 | BEAM TUBE FLANGE | MC | 390300 | B | EA | 2 | R10,1,2 | 2 | | 77028 | 32 pcs. |
| 95 | MCBX CORRECTOR MAGNET WELDMENT | MD | 390312 | * | | ICB HAS | | | | | |
| 96 | SHIM, 0.05 (.002") | MA | 390482 | * | EA | 8 | R2,S2,L4 | 8 | | 79123 | 77 pcs. |
| 97 | SHIM, 0.13 (.005") | MA | 390483 | * | EA | 8 | R2,S2,L4 | 8 | | 79124 | 84 pcs. |
| 98 | SHIM, 0.25 (.010") | MA | 390484 | * | EA | 8 | R2,S2,L4 | 8 | | 79125 | 67 pcs. |
| 99 | SHIM, 0.38 (.015") | MA | 390485 | * | EA | 8 | R2,S2,L4 | 8 | | 79126 | 55 pcs. |
| 100 | A34B4 (MCSOX) CORRECTOR MOUNTING RING on Kit twice(?) | ME | 390664 | * | EA | 1 | R1,S3,L3 | 1 | | 80927 | 7 pcs. |
| 101 | WELD BACKING RING | MC | 390666 | * | EA | 1 | R7,3,4 | 1 | | 80910 | 7 pcs. |
| 102 | NON-IP END DOME MODIFIED | MD | 390668 | * | EA | 1 | Site 38 | 1 | | 81847 | 7 pcs. |
| 103 | NO. 10 (.190") - 32UNF X .188" LG. CUP POINT SET SCREW; 18-8 SST | MA | 393030 | | EA | 8 | IB4 Bin | 0 | | 82379 | 170 pcs. |
| 104 | A34B4 CORRECTOR MAGNET (MCSOX CORRECTOR MAGNET) | | Item #12 on ME-390529 | * | | ICB HAS | | | | | |
| 105 | MQSXA CORRECTOR MAGNET | | Item #9 on ME-390529 | * | | ICB HAS | | | | | |

# ADDITIONAL PARTS REQUEST

**ADDITIONAL PARTS REQUEST FORM SHALL BE USED TO ACCESS ALL ITEMS FROM INVENTORY WITH THE EXCEPTION OF PARTS KITS.**

**THIS FORM MUST BE SIGNED BY AN ACQUISITIONER BEFORE BRINGING TO THE STOCKROOM**

MAGNET OR COIL # [redacted]C-03

DATE REQUESTED 5-4-05

BUDGET CODE 300/ 1.1.13.4

JOB TICKET #

MACHINE SHOP REQ. #

PURCHASE RELEASE #

REQUESTED BY Damon Bice

DELIVER TO P/U

NEED BY DATE 5-4-05

MMR #

PO #

OTHER

**PARTS STATUS (CHECK ONE)**

- ☐ DEFECTIVE PARTS ISSUED
- ☐ PARTS SCRAPPED
- ☐ A/R ITEMS
- ☐ DEFECTIVE ASSEMBLY
- ☒ MISSING FROM KIT ALREADY ISSUED
- ☐ INDIVIDUAL PARTS
- ☐ CONSUMABLES
- ☐ PARTS LOST

**ACQUISITIONER SIGNATURE** Marsha Schmidt **ID#** 4223 **DATE** 5/4/05

**PLEASE INDICATE REVISION REQUIRED**

| LOCATION | PART # | REV | QTY | DESCRIPTION | RF # | SIR # |
|---|---|---|---|---|---|---|
| IB#4 BIN | MC 390294 | | 4 | Shipping restraint nut | 766666 | |
| | | | | | | |
| | | | | | | |
| | | | | | | |
| | | | | | | |
| | | | | | | |
| | | | | | | |
| | | | | | | |

**STOCKROOM SIGNATURE** [illegible] **ID#** 12792 **DATE** 5-4-05

**PARTS DELETED FROM DATABASE** **ID#** **DATE**

**A COPY OF THIS FORM IS TO BE INCLUDED IN WITH THE TRAVELER**

**PARTS RECEIVED BY** [illegible] **ID#** 13493 **DATE** 5/4/05

# ADDITIONAL PARTS REQUEST

**ADDITIONAL PARTS REQUEST FORM SHALL BE USED TO ACCESS ALL ITEMS FROM INVENTORY WITH THE EXCEPTION OF PARTS KITS.**

**THIS FORM MUST BE SIGNED BY AN ACQUISITIONER BEFORE BRINGING TO THE STOCKROOM**

MAGNET OR COIL # *LMQXC03*

DATE REQUESTED *5/2/05*

BUDGET CODE *300/1.1.1.3.4(LCD)*

JOB TICKET #

MACHINE SHOP REQ. #

PURCHASE RELEASE #

REQUESTED BY *Steve Gould*

DELIVER TO *ICB*

NEED BY DATE *5/02/05*

MMR #

PO #

OTHER

**PARTS STATUS (CHECK ONE)**

☐ DEFECTIVE PARTS ISSUED

☐ DEFECTIVE ASSEMBLY

☒ INDIVIDUAL PARTS

☐ PARTS SCRAPPED

☒ MISSING FROM KIT ALREADY ISSUED

☐ CONSUMABLES

☐ A/R ITEMS

☐ PARTS LOST

**ACQUISITIONER SIGNATURE** Marsha Schmidt **ID#** 4223 **DATE** 5/2/05

**PLEASE INDICATE REVISION REQUIRED**

IN STOCK 6

| LOCATION | PART # | REV | QTY | UOM | DESCRIPTION | RF # | SIR # |
|---|---|---|---|---|---|---|---|
| *R2.2.2* | *430176* | | *1* | *Each* | *Housing Cover* | 82705 | |
| | | | | | | | |
| | | | | | | | |
| | | | | | | | |
| | | | | | | | |
| | | | | | | | |
| | | | | | | | |
| | | | | | | | |

**STOCKROOM SIGNATURE** [illegible] **ID#** 11939 **DATE** 5/2/05

**PARTS DELETED FROM DATABASE** **ID#** **DATE**

**A COPY OF THIS FORM IS TO BE INCLUDED IN WITH THE TRAVELER**

**PARTS RECEIVED BY** [illegible] **ID#** 13493 **DATE** 5/2/05

# ADDITIONAL PARTS REQUEST

**ADDITIONAL PARTS REQUEST FORM SHALL BE USED TO ACCESS ALL ITEMS FROM INVENTORY WITH THE EXCEPTION OF PARTS KITS.**

**THIS FORM MUST BE SIGNED BY AN ACQUISITIONER BEFORE BRINGING TO THE STOCKROOM**

MAGNET OR COIL # *LQXC-03*

DATE REQUESTED *4-13-05*

BUDGET CODE *300/1.1.1.3.4*

JOB TICKET # _____

MACHINE SHOP REQ. # _____

PURCHASE RELEASE # _____

REQUESTED BY *Damon Bice*

DELIVER TO *ICB*

NEED BY DATE *4-13-05*

MMR # _____

PO # _____

OTHER _____

**PARTS STATUS (CHECK ONE)**

- ☐ DEFECTIVE PARTS ISSUED
- ☐ PARTS SCRAPPED
- ☐ A/R ITEMS
- ☐ DEFECTIVE ASSEMBLY
- ☒ MISSING FROM KIT ALREADY ISSUED
- ☐ INDIVIDUAL PARTS
- ☐ CONSUMABLES
- ☐ PARTS LOST

**ACQUISITIONER SIGNATURE** [signature] **ID#** 4223 **DATE** 4/13/05

**PLEASE INDICATE REVISION REQUIRED**

| LOCATION | PART # | REV | QTY | DESCRIPTION | RF # | SIR # |
|---|---|---|---|---|---|---|
| IB#4 BIN | MB 430166 | | 8 | Crossover Block Wedge | 8207 | |
| | | | | | | |
| | | | | | | |
| | | | | | | |
| | | | | | | |
| | | | | | | |
| | | | | | | |
| | | | | | | |

**STOCKROOM SIGNATURE** [signature] **ID#** 12648 **DATE** 4/13/05

**PARTS DELETED FROM DATABASE** _____ **ID#** _____ **DATE** _____

**A COPY OF THIS FORM IS TO BE INCLUDED IN WITH THE TRAVELER**

**PARTS RECEIVED BY** [signature] **ID#** 13493 **DATE** 4/13/05

# ADDITIONAL PARTS REQUEST

**ADDITIONAL PARTS REQUEST FORM SHALL BE USED TO ACCESS ALL ITEMS FROM INVENTORY WITH THE EXCEPTION OF PARTS KITS.**

**THIS FORM MUST BE SIGNED BY AN ACQUISITIONER BEFORE BRINGING TO THE STOCKROOM**

MAGNET OR COIL # *LQXC03*

REQUESTED BY *Steve Gould*

DATE REQUESTED *4/20/05*

DELIVER TO *ICB*

BUDGET CODE *300/1.1.1.3.4(LCD)*

NEED BY DATE *4/20/05*

JOB TICKET # _____

MMR # _____

MACHINE SHOP REQ. # _____

PO # _____

PURCHASE RELEASE # _____

OTHER _____

**PARTS STATUS (CHECK ONE)**

☐ DEFECTIVE PARTS ISSUED ☐ PARTS SCRAPPED ☐ A/R ITEMS

☐ DEFECTIVE ASSEMBLY ☐ MISSING FROM KIT ALREADY ISSUED

☒ INDIVIDUAL PARTS ☐ CONSUMABLES ☐ PARTS LOST

**ACQUISITIONER SIGNATURE** Marsha Schmidt **ID#** 9223 **DATE** 4/20/05

**PLEASE INDICATE REVISION REQUIRED**

| LOCATION | PART # | REV | QTY | UOM | DESCRIPTION | RF # | SIR # |
|---|---|---|---|---|---|---|---|
| IN STOCK 5 R2,2,3 | 430129 | | 1 | Each | Q3 mounting Ring | 82144 | |
| | | | | | | | |
| | | | | | | | |
| | | | | | | | |
| | | | | | | | |
| | | | | | | | |
| | | | | | | | |
| | | | | | | | |

**STOCKROOM SIGNATURE** [signature] **ID#** 11939 **DATE** 4/20/05

**PARTS DELETED FROM DATABASE** [signature] **ID#** _____ **DATE** _____

**A COPY OF THIS FORM IS TO BE INCLUDED IN WITH THE TRAVELER**

**PARTS RECEIVED BY** [signature] **ID#** 13493 **DATE** 4/20/05

# CERN LHC MQXA

## Acceptance Test at FNAL

## QUALITY RECORD

Cryogenics Science Center

KEK, High Energy Accelerator Research Organization

Magnet ID :_____

Date of approval :_____

Approved by :_____ (FNAL)

:_____ (KEK)

Ver. 0
Ver A (with initial results)

1. Appearance Check

| Procedure | Criteria |
|---|---|
| Check appearance of the magnet by visual inspection. | No harmful defects or deformation |
| Result at TOSHIBA | |
| Acceptable | |
| Result at FNAL | |
| | |

## 2. Interface Dimensions

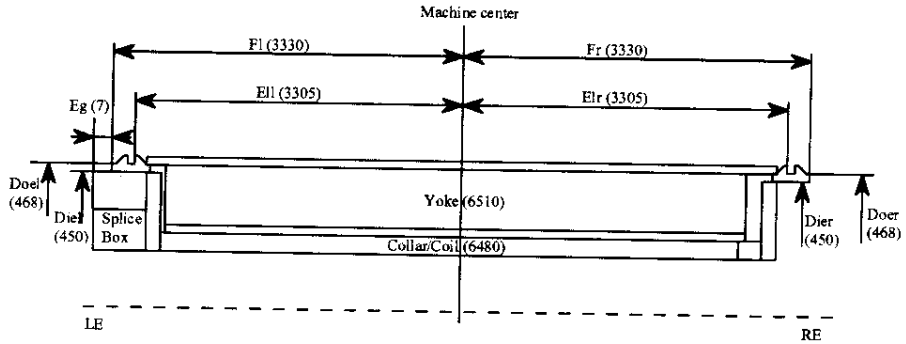


| 1) Dimensions | Unit:mm |
|---|---|
| Procedure | Criteria |
| 1) Dimension Check<br>Measure following dimensions<br>a, b, c : Measuring range: every 45 deg. from 0 deg.<br>d : Splice Box : four points | |
| a) Machine center - Interface | a) 3330 –6/+0 |
| b) Interface outer diameter (Doel,Doer) | b) ϕ468 –4/+0 |
| c) Interface inner diameter (Diel,Dier) | c) ϕ450 –4/+0 |
| d) End Ring - Splice box(Eg) | d) 7 -5/+5 |

Result at TOSHIBA

| Critera | 3330 -6/+0 | | ϕ468 -4/+0 | | ϕ450 -4/+0 | | 7 |
|---|---|---|---|---|---|---|---|
| Position | Fl | Fr | Doel | Doer | Diel | Dier | Eg |
| 0 deg. | 3330.5 | 3330.0 | 467.70 | 467.51 | 450.29 | 449.92 | 6.10 |
| 45 deg. | 3330.0 | 3330.0 | 467.03 | 466.82 | 449.50 | 449.25 | |
| 90 deg. | 3330.0 | 3330.0 | 467.03 | 467.42 | 449.51 | 449.75 | 6.84 |
| 135 deg. | 3330.5 | 3330.0 | 467.00 | 466.96 | 449.49 | 449.29 | |
| 180 deg. | 3330.0 | 3331.0 | | | | | 6.24 |
| 225 deg. | 3330.5 | 3330.5 | | | | | |
| 270 deg. | 3330.0 | 3330.0 | | | | | 5.95 |
| 315 deg. | 3330.0 | 3330.5 | | | | | |
| Result | Acceptable | | Acceptable | | Acceptable | | Acceptable |

Result at FNAL

| Critera | 3330 -6/+0 | | ϕ468 -4/+0 | | ϕ450 -4/+0 | | 7 |
|---|---|---|---|---|---|---|---|
| Position | Fl | Fr | Doel | Doer | Diel | Dier | Eg |
| 0 deg. | 3330 | 3330 | | | | | |
| 45 deg. | | | | | | | |
| 90 deg. | 3330 | 3330 | | | | | |
| 135 deg. | | | | | | | |
| 180 deg. | 3330 | 3330 | | | | | |
| 225 deg. | | | | | | | |
| 270 deg. | 3330 | 3330 | | | | | |
| 315 deg. | | | | | | | |
| Result | | | | | | | |

| 2) End ring interface | | |
|---|---|---|
| Procedure | | Criteria |
| Check the weld edge preparation using ϕ449 +0/-0.02 gauge. | | 1) The gauge shall be inserted into the end ring.<br>2) Measurement data will be reported if the gage cannot be inserted. |
| Measurement part | Result at TOSHIBA | Remarks |
| LE side | Acceptable | LE : 1mm |
| RE side | Acceptable | ------ |
| Measurement part | Result at FNAL | Remarks |
| LE side | | |
| RE side | | |

| 3) Radial envelope | |
|---|---|
| Procedure | Criteria |
| Check shell radial envelope using ϕ530mm gauge. (dummy cold-mass support) | The gauge shall pass the magnet. |
| Result at TOSHIBA | |
| Acceptable | |
| Result at FNAL | |
| | |

| 4) Magnet bore | |
|---|---|
| Procedure | Criteria |
| Check appearance of the magnet bore by visual inspection. | No harmful defects or deformation |
| Result at TOSHIBA | |
| Acceptable<br>M.P.Lap was dameged at end section ( LE side and RE side ) | |
| Result at FNAL | |
| | |

| 5) Magnet bus slot | |
|---|---|
| Procedure | Criteria |
| Check the bus slot using bus line model gauge. | The gauge shall pass the magnet bus slot. |
| Result at TOSHIBA | |
| Acceptable | |
| Result at FNAL | |
| | |

| 6) Weight | |
|---|---|
| Procedure | Criteria |
| Measure the magnet weight. | Weight < 8500kg |
| Result at TOSHIBA | |
| 8340 Kg | Acceptable |
| Result at FNAL | |
| | |

| 7) Length of magnet lead, QPH wire, Voltage taps | | |
|---|---|---|
| Procedure | Criteria | |
| Check the lengths of magnet lead, QPH wire, voltage taps. | 1) Magnet lead : > 500mm from magnet LE end plate<br>2) Voltage taps wire : > 2000mm from magnet LE end plate<br>3) QPH wire : >2000mm from magnet LE end plate | |
| Result at TOSHIBA | | |
| Measuring wire | Measured Value | Result |
| 1) Magnet lead | > 500mm | Acceptable |
| 2) Voltage taps | >2000mm | Acceptable |
| 3) QPH wire | > 2000mm | Acceptable |
| Result at FNAL | | |
| Measuring wire | Measured Value | Result |
| 1) Magnet lead | | |
| 2) Voltage taps | | |
| 3) QPH wire | | |

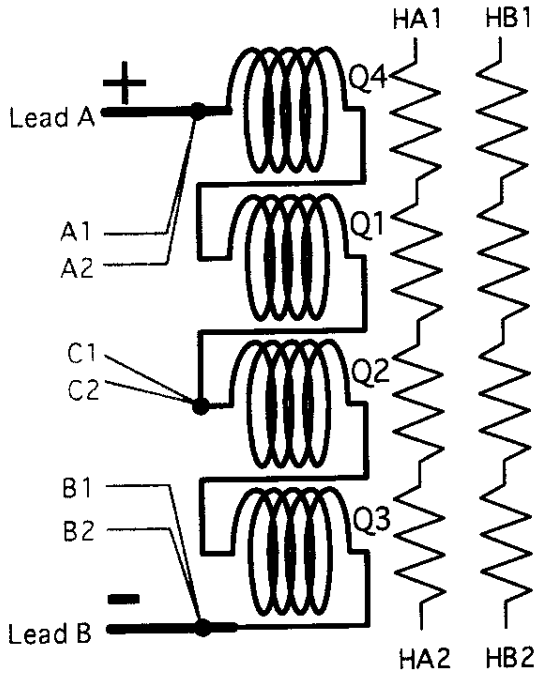

| 8) Cable tags | |
|---|---|
| Procedure | Criteria |
| Check the cable tags. | Consistent to the tag No. table. |

Vtaps & QPH Tag No. table

| Lead | Tag Name | Description |
|---|---|---|
| Voltage taps | A1, A2 | Taps from A lead |
| | B1, B2 | Taps from B lead |
| | C1, C2 | Center taps |
| Quench heaters | HA1, HA2 | Heater A |
| | HB1, HB2 | Heater B |

| Result at TOSHIBA | |
|---|---|
| 1)Voltage taps | Acceptable |
| 2)Quench heaters | Acceptable |
| **Result at FNAL** | |
| 1)Voltage taps | |
| 2)Quench heaters | |

## 3. Coil Resistance

| Procedure | Criteria |
|---|---|
| Measure the magnet total resistance and coil temperature at coil current of DC1A.<br>Calculate resistance at 20 °C; $R_{20}$.<br><br>$R_{20}=V/I/(1+0.00393*(T_{coil}-20))$<br>V : Voltage between magnet leads (V)<br>I : Coil current obtained by shut resistor (A)<br>$T_{coil}$ : coil temperature (°C) | 1) Compare with $R_{20}$ at TOSHIBA. Variation of $R_{20}$ < 0.005 Ω<br>2) Voltage taps(C-A, C-B): Measurement Only |

**Result at TOSHIBA**

| $T_{coil}$ | Not Reported | |
|---|---|---|
| Magnet total voltage (V) | Current (A) | Magnet total resistance $R_{20}$ (Ω) |
| Not Reported | Not Reported | 6.80357 |

| Voltage taps tag No. | V (V) | I (A) | $R_{20}$ (Ω) | Voltage taps tag No. | V (V) | I (A) | $R_{20}$ (Ω) |
|---|---|---|---|---|---|---|---|
| C1 - A1 | Not Reported | Not Reported | 3.39858 | C2 - A1 | Not Reported | Not Reported | 3.39863 |
| C1 - A2 | Not Reported | Not Reported | 3.39858 | C2 - A2 | Not Reported | Not Reported | 3.39865 |
| C1 - B1 | Not Reported | Not Reported | 3.39969 | C2 - B1 | Not Reported | Not Reported | 3.39968 |
| C1 - B2 | Not Reported | Not Reported | 3.39969 | C2 - B2 | Not Reported | Not Reported | 3.39968 |

Acceptable

**Result at FNAL**

| $T_{coil}$ | | | |
|---|---|---|---|
| Magnet total voltage (V) | Current (A) | Magnet total resistance $R_{20}$ (Ω) | Variation (Ω) ($R_{20\text{-TOSHIBA}}$ - $R_{20\text{-FNAL}}$) |
| | | 6.766 | |
| Voltage taps tag No. | $R_{20}$ (Ω) | Voltage taps tag No. | $R_{20}$ (Ω) |
| C1 - A1 | 3.382 | C2 - A1 | 3.381 |
| C1 - A2 | 3.381 | C2 - A2 | 3.381 |
| C1 - B1 | 3.382 | C2 - B1 | 3.382 |
| C1 - B2 | 3.382 | C2 - B2 | 3.382 |

## 4. Instrumentations

### 1) Voltage taps

| Procedure | Criteria |
|---|---|
| Check resistance of all voltage taps by four terminal method at 1A.<br>Magnet lead : Q4 4th : +<br>Magnet lead : Q3 3rd : - | Magnet lead + : A1, A2 (Pole4 Out)<br>Magnet lead - : B1, B2 (Pole3 Out)<br>Center taps : C1, C2 (Pole1 Out)<br><br>Variation of $R_{20}$(A1),$R_{20}$(A2) : < 0.1%<br>Variation of $R_{20}$(B1),$R_{20}$(B2) : < 0.1%<br>Variation of $R_{20}$(C1),$R_{20}$(C2) : < 0.1% |

Result at TOSHIBA

| Voltage taps No. | Resistance(Ω) | Voltage taps No. | Resistance(Ω) | Variation(%) | Result |
|---|---|---|---|---|---|
| A1 | 0.00266 | A2 | 0.00266 | 0.00 | Acceptable |
| C1 | 3.40132 | C2 | 3.40132 | 0.00 | Acceptable |
| B1 | 6.80105 | B2 | 6.80105 | 0.00 | Acceptable |

Result at FNAL

| Voltage taps No. | Resistance(Ω) | Voltage taps No. | Resistance(Ω) | Variation(%) | Result |
|---|---|---|---|---|---|
| A1 | .0029 | A2 | .003 | | |
| C1 | 3.39 | C2 | 3.39 | | |
| B1 | 6.77 | B2 | 6.77 | | |

### 2) QPH

| Procedure | Criteria |
|---|---|
| Measure the resistance of QPH. | QPH resistance : 30 +4/-4Ω (HA,HB) |

Result at TOSHIBA

| QPH No. | QPH Resistance(Ω) | Result |
|---|---|---|
| HA | 28.7 | Acceptable |
| HB | 28.7 | Acceptable |

Result at FNAL

| QPH No. | QPH Resistance(Ω) | Result |
|---|---|---|
| HA | 28.35 | |
| HB | 28.42 | |

5. Coil Inductance

| Procedure | Criteria |
|---|---|
| Measure inductance of magnet at frequencies of 100Hz and 1kHz using LCR meter. | 1) Variation of inductance Voltage taps No. C-A, inductance Voltage taps No. C-B : < 5%<br>2) Total inductance of the magnet :Measurement only |

Result at TOSHIBA

| Voltage taps tag No. | 100Hz | Result (%) | 1kHz | Result (%) | Voltage taps tag No. | 100Hz | Result (%) | 1kHz | Result (%) |
|---|---|---|---|---|---|---|---|---|---|
| C1 - A1 | 37.19 | 0.08 | 13.369 | 0.19 | C2 - A1 | 37.18 | 0.05 | 13.369 | 0.19 |
| C1 - A2 | 37.19 | | 13.369 | | C2 - A2 | 37.18 | | 13.368 | |
| C1 - B1 | 37.16 | | 13.343 | | C2 - B1 | 37.16 | | 13.343 | |
| C1 - B2 | 37.16 | | 13.343 | | C2 - B2 | 37.16 | | 13.343 | |

| | 100Hz | 1kHz |
|---|---|---|
| Magnet | 87.25 | 31.05 |

Acceptable

Result at FNAL

| Voltage taps tag No. | 100Hz | Result (%) | 1kHz | Result (%) | Voltage taps tag No. | 100Hz | Result (%) | 1kHz | Result (%) |
|---|---|---|---|---|---|---|---|---|---|
| C1 - A1 | 37.18 | | 13.41 | | C2 - A1 | 37.18 | | 13.41 | |
| C1 - A2 | 37.18 | | 13.41 | | C2 - A2 | 37.18 | | 13.41 | |
| C1 - B1 | 37.15 | | 13.38 | | C2 - B1 | 37.15 | | 13.38 | |
| C1 - B2 | 37.15 | | 13.38 | | C2 - B2 | 37.15 | | 13.38 | |

| | 100Hz | 1kHz |
|---|---|---|
| Magnet | 87.31 | 31.42 |

6. Turn to Turn Insulation

| Procedure | Criteria |
|---|---|
| Apply impulse voltage of 1000V between the magnet leads and record the signal.<br>Instrumentation: Impulse generator, recorder | Compare the signal with one at KEK.<br>Attach rthe chart. |
| Result at TOSHIBA | |
| Acceptable | See appendix |
| Result at FNAL | |
| | |

## 7. Coil Insulation

| 1) Insulation Resistance | | | |
|---|---|---|---|
| Procedure | | Criteria | |
| Apply 1kV-DC to the coil in 1 min. and measure insulation resistance by using insulation tester.<br>High voltage : Coils□Ground : Collar, Yoke, Shell, QPH | | Insulation resistance > 100MΩ | |
| Result at TOSHIBA | | | |
| Temperature(°C) | Humidity(%) | Insulation(MΩ) | Result |
| 23 | 23 | > 2000 | Acceptable |
| Result at FNAL | | | |
| Temperature(°C) | Humidity(%) | Insulation(MΩ) | Result |
| | | | |

| 2) Hi-pot test | | | |
|---|---|---|---|
| Procedure | | Criteria | |
| Apply 3kV-DC to the coil in 1 min. and measure leak current or insulation resistance.<br>High voltage : Coil<br>Ground : Collar, Yoke, Shell, QPH | | No break down<br>Record leak current or resistance. | |
| Result at TOSHIBA | | | |
| Temperature (°C) | Humidity (%) | Leak current (mA) | Result |
| 23 | 23 | 0.01 | Acceptable |
| Result at FNAL | | | |
| Temperature (°C) | Humidity (%) | Leak current or resistance | Result |
| | | | |

## 8. QPH Insulation

### 1) Insulation Resistance

| Procedure | Criteria |
|---|---|
| Apply 1kV-DC to the QPH in 1 min. and measure insulation resistance by using insulation tester.<br>High voltage : QPH<br>Ground : Coil, Collar, Yoke, Shell | Insulation resistance > 100MΩ |

Result at TOSHIBA

| Heater No. | Temperature (°C) | Humidity (%) | Insulation(MΩ) | Result |
|---|---|---|---|---|
| HA | 23 | 23 | > 2000 | Acceptable |
| HB | | | > 2000 | Acceptable |

Result at FNAL

| Heater No. | Temperature (°C) | Humidity (%) | Insulation(MΩ) | Result |
|---|---|---|---|---|
| HA | | | | |
| HB | | | | |

### 2) Hi-pot test

| Procedure | Criteria |
|---|---|
| Apply 3kV-DC to the QPH in 1 min. and measure leak current or insulation resistance.<br>High voltage : QPH<br>Ground : Coil, Collar, Yoke, Shell | No break down<br>Record leak current or resistance. |

Result at TOSHIBA

| Heater No. | Temperature (°C) | Humidity (%) | Leak current (mA) | Result |
|---|---|---|---|---|
| HA | 23 | 23 | 0.00 | Acceptable |
| HB | | | 0.00 | Acceptable |

Result at FNAL

| Heater No. | Temperature (°C) | Humidity (%) | Leak current or resistance | Result |
|---|---|---|---|---|
| HA | | | | |
| HB | | | | |

9. QPH Discharge Test

| 1) Appearance check | |
|---|---|
| Procedure | Criteria |
| Check appearance of QPH wires by visual inspection. | No harmful defects or deformation. |
| Result at TOSHIBA | |
| Acceptable | |
| Result at FNAL | |
| | |

| 2) QPH discharge test | | |
|---|---|---|
| Procedure | | Criteria |
| Charge the power supply above 850 V and fire QPHs. | | No strange signal observed.<br>Attach the chart. |
| Result at TOSHIBA | | |
| HA | Acceptable | See appendix |
| HB | Acceptable | See appendix |

| 3) QPH resistance | | | | |
|---|---|---|---|---|
| Procedure | | Criteria | | |
| Measure resistance before/after the discharge test. | | Resistance change < 10% | | |
| Result at TOSHIBA | | | | |
| QPH No. | Before (Ω) | After (Ω) | Variation (%) | Result |
| HA | 28.7 | 28.7 | 0.0 | Acceptable |
| HB | 28.7 | 28.7 | 0.0 | Acceptable |
| Result at FNAL | | | | |
| QPH No. | Before (Ω) | After (Ω) | Variation (%) | Result |
| HA | | | | |
| HB | | | | |

FORM #1 FIXED VOLTAGE TAPS _1A_FORM

Test of Q3 FVTs

Apply 1 A current between BUS #1 & BUS #2 on the feed end (see diagram to right)
1. Clamp bus #1 to bus #2 on return end
2. Connect Current Source: BUS #1 to Positive and BUS #2 to Negative
Use a 3457 or equilivent DVM and record measurement to 4 decimal places
Use 2 wires Voltage Measurements Technique:
1. Connect DVM LO wire to BUS#2 (or Negative output of Power source)
2. HI wire of DVM will move through wires to measure V
DO NOT USE DC CURRENT LARGER THAN 2A.
DO NOT APPLY CURRENT THROUGH MAGNET LONGER THAN 30MIN.

| |
|---|
| BUS #1 |
| BUS #2 |
| BUS #3 |
| BUS #4 |

POWER BUS LOCATION
RETURN END

| | |
|---|---|
| BUS #1 | BUS #2 |
| BUS #3 | BUS #4 |

POWER BUS LOCATION
FEED END

| HYPERTRONIC CONNECTOR | | FNAL Labels | Description | Wire Labels | Expected Voltage, V | Measured |
|---|---|---|---|---|---|---|
| Module | Pin | | | | | |
| NA | NA | VTa1Q3 | Q3 Lead Voltage Tap "a", primary | EE1113 | 7.0000 | 6.993V |
| NA | NA | VTa2Q3 | Q3 Lead Voltage Tap "a", redundant | EE1123 | 7.0000 | 6.992V |
| NA | NA | VTb1Q3 | Q3 lead Voltage Tap "b", primary | EE1313 | 0.0030 | 0.0025V |
| NA | NA | VTb2Q3 | Q3 Lead Voltage Tap "b" redundant | EE1323 | 0.0030 | 0.0026V |
| NA | NA | VTc1Q3 | Q3 Center Voltage Tap "c", primary | EE1213 | 3.5000 | 3.4972V |
| NA | NA | VTc2Q3 | Q3 Center Voltage Tap "c", redundant | EE1223 | 3.5000 | 3.4973V |
| | | | | | | |
| | | | | | | |
| | | | | | | |
| | | | | | | |
| | | | | | | |
| | | | | | | |
| | | | | | | |
| | | | | | | |
| | | | | | | |
| | | | | | | |

| | |
|---|---|
| Across BUS #1 and BUS #2 | 6.999V |

**NOTE:** Corrector coil voltage tap EE8223 was cut and had to have a butt splices added to make it the correct length.
Continuity of wire was checked through magnet (ok).

LMQXC03

4/13

***Form #3 PROTECTION STRIP HEATERS***

MEASURE RESISTANCE ACROSS EACH HEATER USING HANDHELD METER

| Module | Pin | *Breakout BOX Labels* | *Expected Resistance, OHM* | *Measured Resistance OHM* | *FNAL Label* | *Description* |
|---|---|---|---|---|---|---|
| *NA* | *NA* | **YT1113+** | **30** | **29.2** | *H1aQ3* | *Q3 Protection (Strip) Heater, ("a" circuit) (CERN lead #1+)* |
| *NA* | *NA* | **YT1113-** | | | *H2aQ3* | *Q3 Protection (Strip) Heater, ("a" circuit) (CERN lead #1-)* |
| *NA* | *NA* | **YT1123+** | **30** | **29.2** | *H1bQ3* | *Q3 Protection (Strip) Heater, ("b" circuit) (CERN lead #1+)* |
| *NA* | *NA* | **YT1123-** | | | *H2bQ3* | *Q3 Protection (Strip) Heater, ("b" circuit) (CERN lead #1-)* |

LMQXC03

5/25/2005

FORM #1 FIXED VOLTAGE TAPS _1A_FORM

Test of Q3 FVTs

Apply 1 A current between BUS #1 & BUS #2 on the feed end (see diagram to right)
1. Clamp bus #1 to bus #2 on return end
2. Connect Current Source: BUS #1 to Positive and BUS #2 to Negative
Use a 3457 or equilivent DVM and record measurement to 4 decimal places
Use 2 wires Voltage Measurements Technique:
1. Connect DVM LO wire to BUS#2 (or Negative output of Power source)
2. HI wire of DVM will move through wires to measure V
DO NOT USE DC CURRENT LARGER THAN 2A.
DO NOT APPLY CURRENT THROUGH MAGNET LONGER THAN 30MIN.

| |
|---|
| BUS #1 |
| BUS #2 |
| BUS #3 |
| BUS #4 |

POWER BUS LOCATION
RETURN END

| | |
|---|---|
| BUS #1 | BUS #2 |
| BUS #3 | BUS #4 |

POWER BUS LOCATION
FEED END

| HYPERTRONIC CONNECTOR | | FNAL Labels | Description | Wire Labels | Expected Voltage, V | Measured |
|---|---|---|---|---|---|---|
| Module | Pin | | | | | |
| M5 | 2 | VTa1Q3 | Q3 Lead Voltage Tap "a", primary | EE1113 | 7.0000 | 6.93 |
| M5 | 1 | VTa2Q3 | Q3 Lead Voltage Tap "a", redundant | EE1123 | 7.0000 | 6.927 |
| M6 | 3 | VTb1Q3 | Q3 lead Voltage Tap "b", primary | EE1313 | 0.0030 | 0.0258 |
| M6 | 4 | VTb2Q3 | Q3 Lead Voltage Tap "b" redundant | EE1323 | 0.0030 | 0.0257 |
| M6 | 1 | VTc1Q3 | Q3 Center Voltage Tap "c", primary | EE1213 | 3.5000 | 3.476 |
| M6 | 2 | VTc2Q3 | Q3 Center Voltage Tap "c", redundant | EE1223 | 3.5000 | 3.475 |
| | | | | | | |
| | | | | | | |
| | | | | | | |
| | | | | | | |
| | | | | | | |
| | | | | | | |
| | | | | | | |
| | | | | | | |
| | | | | | | |
| | | | | | | |

| | |
|---|---|
| Across BUS #1 and BUS #2 | 6.936V |

LMQXC03

3/13

## *Form #2 CRYO HEATER CHECK_OUT*

MEASURE RESISTANCE ACROSS EACH HEATER USING HANDHELD METER
MEASURE RESISTANCE FROM HEATER TO GND USING HANDHELD METER

| Module | Pin | | Expected Resistance, OHM | Measured Resistance, OHM | FNAL Label | Description |
|---|---|---|---|---|---|---|
| | | | | | | |
| | | | | | | |
| | | | | | | |
| | | | | | | |
| M15 | 1 | EH8313+ | 17 | 17.9 | W1aQ3 | Q3 Cryogenic Heater lead end - wire toward cold mass end plate (CERN #1 I+) |
| M15 | 2 | EH8313- | | | W2aQ3 | Q3 Cryogenic Heater lead end - wire toward cold mass mag center (CERN #1 I-) |
| M15 | 3 | EH8323+ | 17 | 17.5 | W1bQ3 | Q3 Cryogenic Heater non-lead end- wire toward cold mass end plate (CERN #2 I+) |
| M15 | 4 | EH8323- | | | W2bQ3 | Q3 Cryogenic Heater non-lead end- wire toward cold mass mag center (CERN #2 I-) |

| | | | | | | |
|---|---|---|---|---|---|---|
| | | | | | | |
| | | | | | | |
| | | | | | | |
| | | | | | | |
| M15 | 1 | EH8313+ | more than 20MOHM | Inf | W1aQ3 | Q3 Cryogenic Heater lead end - wire toward cold mass end plate (CERN #1 I+) |
| | | GND | | | | |
| M15 | 3 | EH8323+ | more than 20MOHM | Inf | W1bQ3 | Q3 Cryogenic Heater non-lead end- wire toward cold mass end plate (CERN #2 I+) |
| | | GND | | | | |

LMQXCØ3

4/13

*Form #3 PROTECTION STRIP HEATERS*

MEASURE RESISTANCE ACROSS EACH HEATER USING HANDHELD METER
MEASURE RESISTANCE FROM HEATER TO GND USING HANDHELD METER
MEASURE RESISTANCE FROM HEATER TO COIL USING HANDHELD METER

| | | | | | | |
|---|---|---|---|---|---|---|
| M22 | 4 | YT1113- | 30 | 30.35 | H2aQ1 | Q1 Protection (Strip) Heater, 1-4 & 2-3 circuit (FNAL lead A-) (CERN lead #1-) |
| M21 | 5 | YT1113+ | | | H1aQ1 | Q1 Protection (Strip) Heater, 1-4 & 2-3 circuit (FNAL lead A+) (CERN lead #1+) |
| M22 | 2 | YT1123+ | 30 | 30.42 | H1bQ3 | Q3 Protection (Strip) Heater, 1-2 & 3-4 circuit (FNAL lead B+) (CERN lead#2+) |
| M23 | 1 | YT1123- | | | H2bQ3 | Q3 Protection (Strip) Heater, 1-2 & 3-4 circuit (FNAL lead B-) (CERN lead #2-) |
| M22 | 4 | YT1113- GND | more than 20MOHM | INF | H2aQ3 | Q3 Protection (Strip) Heater, 1-4 & 2-3 circuit (FNAL lead A-) (CERN lead #1-) |
| M22 | 2 | YT1123+ GND | more than 20MOHM | INF | H1bQ3 | Q3 Protection (Strip) Heater, 1-2 & 3-4 circuit (FNAL lead B+) (CERN lead#2+) |
| M22 | 4 | YT1113- COIL | more than 20MOHM | INF | H2aQ3 | Q3 Protection (Strip) Heater, 1-4 & 2-3 circuit (FNAL lead A-) (CERN lead #1-) |
| M22 | 2 | YT1123+ COIL | more than 20MOHM | INF | H1bQ3 | Q3 Protection (Strip) Heater, 1-2 & 3-4 circuit (FNAL lead B+) (CERN lead#2+) |

LMQXC03

*Form#4 RTDs Measurements*

*MEASURE RESISTANCE ACROSS EACH RTD USING A FOUR WIRE METER*
*MEASURE RESISTANCE FROM RTD TO GROUND USING HANDHELD METER*
*MEASURE RESISTANCE FROM RTD TO THE COIL USING HANDHELD METER*

| Module | Pin | Breakout BOX Labels | Expected Resistance, OHM | Measured Resistance OHM | FNAL Label | Description |
|---|---|---|---|---|---|---|
| | | | | | | |
| | | | | | | |
| | | | | | | |
| | | | | | | |
| | | | | | | |
| | | | | | | |
| | | | | | | |
| | | | | | | |
| M26 | 9 | TT8313 I+ | 57 | 64.61 | TaQ3_I+ | Q3 RTD, primary Wire color: Yellow |
| M26 | 8 | TT8313 I- | | | TaQ3_I- | Q3 RTD, primary Wire color: Green |
| M26 | 7 | TT8313 U+ | | | TaQ3_V+ | Q3 RTD, primary Wire color: Black |
| M26 | 12 | TT8313 U- | | | TaQ3_V- | Q3 RTD, primary Wire color: Red |
| M26 | 13 | TT8323 I+ | 57 | 66.76 | TbQ3_I+ | Q3 RTD, redundant: Wire color: Yellow |
| M26 | 14 | TT8323 I- | | | TbQ3_I- | Q3 RTD, redundant: Wire color: Green |
| M26 | 15 | TT8323 U+ | | | TbQ3_V+ | Q3 RTD, redundant: Wire color: Black |
| M26 | 16 | TT8323 U- | | | TbQ3_V- | Q3 RTD, redundant: Wire color: Red |
| | | | | | | |
| | | | | | | |
| | | | | | | |
| | | | | | | |
| M26 | 9 | TT8313 I+ GND | more than 20MOHM | INF | TaQ3_I+ | Q3 RTD, primary Wire color: Yellow |
| M26 | 9 | TT8323 I+ GND | more than 20MOHM | INF | TbQ3_I+ | Q3 RTD, redundant: Wire color: Yellow |
| | | | | | | |
| | | | | | | |
| | | | | | | |
| | | | | | | |
| M26 | 9 | TT8313 I+ COIL | more than 20MOHM | INF | TaQ3_I+ | Q3 RTD, primary Wire color: Yellow |
| M26 | 9 | TT8323 I+ COIL | more than 20MOHM | INF | TbQ3_I+ | Q3 RTD, redundant: Wire color: Yellow |

LMQXC03

6/13

| Ccoil bus # | NA | 3 | 4 | 1 | 2 | 7 | 8 | 5 | 6 | NA |
|---|---|---|---|---|---|---|---|---|---|---|
| | XXX | V3A | V3B | H3A | H3B | B3A | B3B | B6A | B6B | XXX |
| | XXX | V2A | V2B | H2A | H2B | B4A | B4B | A4A | A4B | XXX |
| | XXX | V1A | V1B | H1A | H1B | A2A | A2B | A3A | A3B | XXX |

**Form#5 Correction COILs for Q3 magnet**

MEASURE RESISTANCE ACROSS BOTH CCOIL BUSES
MEASURE RESISTANCE FROM CCOIL TO GROUND
MEASURE RESISTANCE BETWEEN TAPS
MEASURE RESISTANCE FROM EACH TAP TO CCOIL BUS
MEASURE CONTINUITY OF Q1 CCOIL BUS
MEASURE FOR SHORT BETWEEN Q1 CCOIL BUS AND GRD
MEASURE CONTINUITY OF Q2 CCOIL BUS
MEASURE FOR SHORT BETWEEN Q2 CCOIL BUS AND GRD

| Horizontal Corrector Coil | | Expected | Measured |
|---|---|---|---|
| H3-A | CCOIL BUS #1 | *23 OHMS* | 21.93 OHMS |
| H3-B | CCOIL BUS #2 | | |
| Vertical Corrector Coil | | | |
| V3-A | CCOIL BUS #3 | 19 OHMS | 17.91 OHMS |
| V3-B | CCOIL BUS #4 | | |
| A2 Corrector Coil | | | |
| A2-A | CCOIL BUS #7 | 10 OHMS | 7.96 OHMS |
| A2-B | CCOIL BUS #8 | | |
| | | | |
| H3-A | CCOIL BUS #1 | >20 KOHMS | INF |

LMQXC03

7/13

| | | | |
|---|---|---|---|
| | GND | | |
| V3-A | CCOIL BUS #3 | >20 KOHMS | INF |
| | GND | | |
| A2-A | CCOIL BUS #7 | >20 KOHMS | INF |
| | GND | | |
| A3 Corrector Coil resistance | | | |
| A3-A | CCOIL BUS #5 | *14 OHMS* | 13.62 OHMS |
| A3-B | CCOIL BUS #6 | | |
| B3 Corrector Coil resistance | | | |
| B3-A | CCOIL BUS #7 | 28 OHMS | 28.48 OHMS |
| B3-B | CCOIL BUS #8 | | |
| A4 Corrector Coil resistance | | | |
| A4-A | CCOIL BUS #5 | 12 OHMS | 11.92 OHMS |
| A4-B | CCOIL BUS #6 | | |
| A3-A | CCOIL BUS #1 | >20K OHMS | INF |
| | GND | | |
| B3-A | CCOIL BUS #3 | >20K OHMS | INF |
| | GND | | |
| A4-A | CCOIL BUS #7 | >20K OHMS | INF |
| | GND | | |

LMQX603

8/13

LMQXC03

9/13

B4 Corrector Coil resistance

| | | | |
|---|---|---|---|
| B4-A | CCOIL BUS #7 | *13 OHMS* | 13.1 OHMS |
| B4-B | CCOIL BUS #8 | | |

B6 Corrector Coil resistance

| | | | |
|---|---|---|---|
| B6-A | CCOIL BUS #5 | 100 OHMS | 99.89 OHMS |
| B6-B | CCOIL BUS #6 | | |

| | | | |
|---|---|---|---|
| B4-A | CCOIL BUS #1 | >20K OHMS | INF |
| | GND | | |
| B6-A | CCOIL BUS #3 | >20K OHMS | INF |
| | GND | | |

| | Expected | Measured |
|---|---|---|
| **EE8123** | >20M OHMS | INF |
| **EE8113** | | |
| **EE8123** | >20M OHMS | INF |
| **EE8223** | | |
| **EE8123** | >20M OHMS | INF |
| **EE8323** | | |
| **EE8123** | >20M OHMS | INF |
| **EE8313** | | |
| **EE8123** | >20M OHMS | INF |
| **EE8423** | | |
| **EE8123** | >20M OHMS | INF |

| | Expected | Measured |
|---|---|---|
| **EE8123** | >20M OHMS | INF |
| **EE8413** | | |
| **EE8123** | >20M OHMS | INF |
| **EE8613** | | |
| **EE8113** | >20M OHMS | INF |
| **EE8223** | | |
| **EE8113** | >20M OHMS | INF |
| **EE8323** | | |
| **EE8113** | >20M OHMS | INF |
| **EE8323** | | |
| **EE8113** | >20M OHMS | INF |

| | | | | | | | | | | |
|---|---|---|---|---|---|---|---|---|---|---|
| | | EE8413 | | | | EE8313 | | | | |
| | | | | | | | | | | |
| | | | | | | | | | | |
| | | | | | | | | | | |
| | | | Expected | Measured | | | Expected | Measured | | |
| | | EE8113 | >20M OHMS | INF | | EE8223 | >20M OHMS | INF | | |
| | | EE8423 | | | | EE8613 | | | | |
| | | | | | | | | | | |
| | | EE8113 | >20M OHMS | INF | | EE8323 | >20M OHMS | INF | | |
| | | EE8413 | | | | EE8313 | | | | |
| | | | | | | | | | | |
| | | EE8113 | >20M OHMS | INF | | EE8323 | >20M OHMS | INF | | |
| | | EE8613 | | | | EE8423 | | | | |
| | | | | | | | | | | |
| | | EE8223 | >20M OHMS | INF | | EE8323 | >20M OHMS | INF | | |
| | | EE8323 | | | | EE8413 | | | | |
| | | | | | | | | | | |
| | | EE8223 | >20M OHMS | INF | | EE8323 | >20M OHMS | INF | | |
| | | EE8313 | | | | EE8613 | | | | |
| | | | | | | | | | | |
| | | EE8223 | >20M OHMS | INF | | EE8313 | >20M OHMS | INF | | |
| | | EE8423 | | | | EE8423 | | | | |
| | | | | | | | | | | |
| | | EE8223 | >20M OHMS | INF | | EE8313 | >20M OHMS | INF | | |
| | | EE8413 | | | | EE8413 | | | | |
| | | | | | | | | | | |
| | | EE8313 | >20M OHMS | INF | | EE8423 | >20M OHMS | INF | | |
| | | EE8613 | | | | EE8613 | | | | |
| | | | | | | | | | | |
| | | EE8423 | >20M OHMS | INF | | EE8413 | >20M OHMS | INF | | |
| | | EE8413 | | | | EE8613 | | | | |

LMQXC03

10/13

LMQXC03

11/13

Measure Vtap to each Ccoil

| | Expected | Measured |
|---|---|---|
| H3A | <5 OHMS | 1.0 OHMS |
| EE8123 | | |
| V3A | <5 OHMS | .99 OHMS |
| EE8113 | | |
| B6A | <5 OHMS | .98 OHMS |
| EE8613 | | |
| B3A | <5 OHMS | .97 OHMS |
| EE8313 | | |
| A4A | <5 OHMS | .97 OHMS |
| EE8423 | | |
| B4A | <5 OHMS | 1.0 OHMS |
| EE8413 | | |
| A3A | <5 OHMS | .98 OHMS |
| EE8323 | | |
| A2A | <5 OHMS | 1.87 OHMS |
| EE8223 | | |

Measure continuity of Q1 Ccoil through bus

| | Expected | Measured |
|---|---|---|
| H3B | 24 OHMS | 22.72 OHMS |
| EE8123 | | |
| V3B | 19 OHMS | 18.67 OHMS |
| EE8113 | | |
| B6B | 100 OHMS | 100.66 OHMS |
| EE8613 | | |
| B3B | 29 OHMS | 29.21 OHMS |
| EE8313 | | |
| A4B | 12 OHMS | 12.75 OHMS |
| EE8423 | | |
| B4B | 13 OHMS | 13.91 OHMS |
| EE8413 | | |
| A3B | 13 OHMS | 14.39 OHMS |
| EE8323 | | |
| A2B | 10 OHMS | 9.57 OHMS |
| EE8223 | | |

Measure Ccoil through bus of Q1 to GND

| | | | | | | | | | | |
|---|---|---|---|---|---|---|---|---|---|---|
| | | | | OK?? | | | | OK?? | | |
| | | Ccoil | Bus | YES | | Ccoil | Bus | YES | | |
| | | V1A | 3 | YES | | V1A | 3 | YES | | |
| | | V1B | 4 | YES | | V1B | 4 | YES | | |
| | | H1A | 1 | YES | | H1A | 1 | YES | | |
| | | H1B | 2 | YES | | H1B | 2 | YES | | |
| | | | | | | | | | | |
| Measure continuity of Q2 Ccoil through bus | | | | | | Measure Ccoil through bus of Q2 to GND | | | | |
| | | | | | | | | | | |
| | | | | OK?? | | | | OK?? | | |
| | | Ccoil | Bus | YES | | Ccoil | Bus | YES | | |
| | | V2A | 3 | YES | | V2A | 3 | YES | | |
| | | V2B | 4 | YES | | V2B | 4 | YES | | |
| | | H2A | 1 | YES | | H2A | 1 | YES | | |
| | | H2B | 2 | YES | | H2B | 2 | YES | | |
| | | | | | | | | | | |

LMQXC03

12/13

## Form#6 Feed through Test

MEASURE RESISTANCE BETWEEN ALL 24-Q1 FEED THROUGH SIGNALS
MEASURE RESISTANCE BETWEEN ALL 46-Q2 FEED THROUGH SIGNALS

| Q1 | | | Q2 | | |
|---|---|---|---|---|---|
| | EXPECTED RESISTANCE | OK?? | | EXPECTED RESISTANCE | OK?? |
| EE1111 | < 1 OHM | YES | EE1112 | < 1 OHM | YES |
| EE1121 | < 1 OHM | YES | EE1122 | < 1 OHM | YES |
| EE1211 | < 1 OHM | YES | EE1212 | < 1 OHM | YES |
| EE1221 | < 1 OHM | YES | EE1222 | < 1 OHM | YES |
| EE1311 | < 1 OHM | YES | EE1312 | < 1 OHM | YES |
| EE1321 | < 1 OHM | YES | EE1322 | < 1 OHM | YES |
| EE8121 | < 1 OHM | YES | EE8122 | < 1 OHM | YES |
| EE8111 | < 1 OHM | YES | EE8112 | < 1 OHM | YES |
| EH8311+ | < 1 OHM | YES | EH8312+ | < 1 OHM | YES |
| EH8311- | < 1 OHM | YES | EH8312- | < 1 OHM | YES |
| EH8321+ | < 1 OHM | YES | EH8322+ | < 1 OHM | YES |
| EH8321- | < 1 OHM | YES | EH8322- | < 1 OHM | YES |
| YT1111+ | < 1 OHM | YES | YT1112+ | < 1 OHM | YES |
| YT1111- | < 1 OHM | YES | YT1112- | < 1 OHM | YES |
| YT1121+ | < 1 OHM | YES | YT1122+ | < 1 OHM | YES |
| YT1121- | < 1 OHM | YES | YT1122- | < 1 OHM | YES |
| TT8311I+ | < 1 OHM | YES | TT8312I+ | < 1 OHM | YES |
| TT8311I- | < 1 OHM | YES | TT8312I- | < 1 OHM | YES |
| TT8311U+ | < 1 OHM | YES | TT8312U+ | < 1 OHM | YES |
| TT8311U- | < 1 OHM | YES | TT8312U- | < 1 OHM | YES |
| TT8321I+ | < 1 OHM | YES | TT8322I+ | < 1 OHM | YES |
| TT8321I- | < 1 OHM | YES | TT8322I- | < 1 OHM | YES |
| TT8321U+ | < 1 OHM | YES | TT8322U+ | < 1 OHM | YES |
| TT8321U- | < 1 OHM | YES | TT8322U- | < 1 OHM | YES |
| | | | EE1412 | < 1 OHM | YES |
| | | | EE1422 | < 1 OHM | YES |
| | | | EE1512 | < 1 OHM | YES |
| | | | EE1522 | < 1 OHM | YES |
| | | | EE1612 | < 1 OHM | YES |
| | | | EE1622 | < 1 OHM | YES |
| | | | EH8332+ | < 1 OHM | YES |
| | | | EH8332- | < 1 OHM | YES |
| | | | EH8342+ | < 1 OHM | YES |
| | | | EH8342- | < 1 OHM | YES |
| | | | YT1132+ | < 1 OHM | YES |
| | | | YT1132- | < 1 OHM | YES |
| | | | YT1142+ | < 1 OHM | YES |
| | | | YT1142- | < 1 OHM | YES |
| | | | TT8332I+ | < 1 OHM | YES |
| | | | TT8332I- | < 1 OHM | YES |
| | | | TT8332U+ | < 1 OHM | YES |
| | | | TT8332U- | < 1 OHM | YES |
| | | | TT8342I+ | < 1 OHM | YES |
| | | | TT8342I- | < 1 OHM | YES |
| | | | TT8342U+ | < 1 OHM | YES |
| | | | TT8342U- | < 1 OHM | YES |

LMQXC03 13/13

**CERN**
CH-1211 Geneva 23
Switzerland

the **Large Hadron Collider** project

*AT MEL Document No.*
**LHC-MCBX-FR-0001** rev. **1.0**

*EDMS Document No.*
---

# Certificate of Conformity

| | | | |
|---|---|---|---|
| ***Part name:*** | MCBX Inner Triplet Dipole Corrector | | |
| ***LHC Identification No.:*** | HCMCBX_001-SI000021 | Serial No.: | HCMCBX_001-SI000021 |
| ***Shipped To:*** | CERN | ***Shipment No:*** | ***21*** |
| | | ***Shipment*** | ***31/03/04*** |
| ***Manufacturer:*** | SIGMAPHI | Contract No.: | F375/LHC/LHC |
| ***Related tech. Specification:*** | LHC-MCBX-CI-0001 and addenda | | |
| ***Related drawings:*** | LHCMCBX_0012 (1525-CN-1001) | | |
| ***Responsible person at CERN:*** | Mikko Karppinen | ***Tel.*** | +41 22 767 4305 |
| | | ***E-mail.*** | Mikko.Karppinen@cern.ch |
| ***Responsible person at SIGMAPHI:*** | Damien Neuvéglise | ***Tel.*** | +33 2 97 01 08 80 |
| | | ***E-mail.*** | dneuveglise@sigmaphi.fr |
| *SIGMAPHI certifies that the delivered material conforms to the technical specification mentioned above:* | | | |
| ***Date: 31/03/04*** | ***Name: D.Neuvéglise*** | | ***Signature: D.Neuvéglise*** |

**Acceptance test results**

| | | ***MCBXV (Inner)*** | ***MCBXH (Outer)*** | ***Remarks:*** |
|---|---|---|---|---|
| ***RT dc resistance (Ω):*** | ***SIGMAPHI:*** | ***17.5*** | ***21.5*** | |
| | ***CERN:*** | ***17.7*** | ***21.8*** | |
| | ***CMA[1]:*** | 17.412 | 21.4 | |
| ***Inductance @1 kHz/100 Hz (mH)*** | ***SIGMAPHI:*** | ***66.2 / 112.56*** | ***68.19 / 161.09*** | |
| | ***CERN*** | ***34.8/72.75*** | ***45.64/88.8*** | |
| | ***CMA:*** | 34.7 / 72.48 | 45.58 / 88.57 | |
| ***R.T. leakage current to ground @ 1.5 kV (μA):*** | ***SIGMAPHI:*** | ***7.5E-9*** | ***10E-8*** | |
| | ***CERN:*** | ***0.015*** | ***0.024*** | |
| | ***CMA:*** | | | |

| | **Cold Mass Assembler** |
|---|---|
| ***Visual inspection*** | |
| ***Name / Signature*** | |
| ***Date*** | |

**Accepted:** ☑

**Rejected:** ☐

[1] Cold Mass Assembler

| | |
|---|---|
| ***Comments (SigmaPhi ):*** | ***Collage d'une feuille de FR4 (ep0.2mm)sur le diamètre intérieur de l'aimant.*** |
| | |
| | |
| | |
| | |
| | |

| | |
|---|---|
| ***Comments (CERN):*** | ***The magnetic axis of this assembly has been measured at warm.*** |
| | ***The scribe line is made relative to dowel pin holes on the connection plate.*** |
| | ***During the combined powering field was rotated 0-360 deg at the nominal current @ 4.3 K.*** |
| | ***During the combined powering field was rotated 0-360 deg at 80 % the nominal current with MCSX and MCTX powered at 100 A @ 1.9 K.*** |
| | ***During the indivual powering the MCBXV and MCBXH reached 700 A and 640 A respectively.*** |
| | |

| | |
|---|---|
| ***Comments (CMA):*** | |
| | |
| | |
| | |
| | |
| | |

**CERN**
CH-1211 Geneva 23
Switzerland

the **Large Hadron Collider** project

*AT MEL Document No.*
**LHC-MCSTX-FR-0001** rev. **1.0**

*EDMS Document No.*
---

# Certificate of Conformity

| | | | |
|---|---|---|---|
| ***Part name:*** | MCSTX Inner Triplet Sextupole Dodecapole Insert | | |
| ***LHC Identification No.:*** | HCMCSTX001-CE000009 | ***Serial No.:*** | HCMCSTX001-CE000009 |
| ***Shipped To:*** | FNAL | ***In MCBX assembly:*** | HCMCBX_001-SI0000## |
| | | ***Shipment No:*** | ## |
| ***Manufacturer:*** | CERN | ***Shipment Date:*** | ***##/11/04*** |
| ***Related tech. Specification:*** | LHC-MCSTX-CI-0001 (in preparation) | | |
| ***Related drawings:*** | LHCMCSTX0001 | | |
| ***Responsible person at CERN:*** | Mikko Karppinen | ***Tel.*** | +41 22 767 4305 |
| | | ***E-mail.*** | Mikko.Karppinen@cern.ch |

*CERN certifies that the delivered material conforms to the technical specification mentioned above:*

| | | |
|---|---|---|
| ***Date: 22/10/04*** | ***Name: M. Karppinen*** | ***Signature:*** *Mikko Karppinen* |

## Acceptance test results

| | | ***MCSX*** | ***MCTX*** | ***Remarks:*** |
|---|---|---|---|---|
| ***RT dc resistance (Ω):*** | ***CERN:*** | ***28.2*** | ***99.08*** | |
| | ***CMA[1]:*** | 27.77 | 98.04 | |
| ***Inductance @1 kHz/100 Hz (mH)*** | ***CERN*** | ***2.26/4.77*** | ***24.24/31.35*** | ***=> L serial*** |
| | ***CMA:*** | 2.256/4.77 | 24.23/31.35 | |
| ***R.T. leakage current to ground @ 500 V (μA):*** | ***CERN:*** | ***<10nA*** | ***<10nA*** | |
| | ***CMA:*** | | | |

| | **Cold Mass Assembler** |
|---|---|
| ***Visual inspection*** | |
| ***Name / Signature*** | |
| ***Date*** | |

**Accepted:** ☒

**Rejected:** ☐

[1] Cold Mass Assembler

| | |
|---|---|
| ***Comments (CERN):*** | ***Magnetic axis have been measured at warm. The initial roll angle of 15 mrad (difference between MCBX and insert) was reduced to 0.4 mrad by modification of the holding on the MCBX The scribe line on the MCBX #21 was shifted by 0.9mm clock-wise (seen from the conn.end) to align both insert and MCBX fields.*** |
| | ***The average dx and dy are out of specification:***<br>***Dx=0.3mm***<br>***Dy=0.45mm*** |
| | ***On the MCSX (sextupole insert) A & B wire outlets are reversed. The Busbars are crossing each other just before the connexion box. A & B are clearly marked on the Busbars.*** |
| | |
| | |
| | |

| | |
|---|---|
| ***Comments (CMA):*** | |
| | |
| | |
| | |
| | |
| | |

**CERN**
CH-1211 Geneva 23
Switzerland

the **Large Hadron Collider** project

*AT MEL Document No.*
**LHC-MQSX-FR-0001** rev. **1.0**

*EDMS Document No.*
---

# Certificate of Conformity

| | | | |
|---|---|---|---|
| ***Part name:*** | MQSX Inner Triplet Skew Quadrupole Corrector | | |
| ***LHC Identification No.:*** | HCMQSX_001-AN000008 | Serial No.: | HCMQSX_001-AN000008 |
| ***Shipped To:*** | CERN | ***Shipment No:*** | ***03*** |
| | | ***Shipment*** | ***20/01/04*** |
| ***Manufacturer:*** | Ansaldo | ***Order No.:*** | CD1000630 |
| ***Related tech. Specification:*** | LHC-MQSXA-CI-0001 and addenda | | |
| ***Related drawings:*** | LHCMQSXA0020 (620RM9829) | | |
| ***Responsible person at CERN:*** | Mikko Karppinen | ***Tel.*** | +41 22 767 4305 |
| | | ***E-mail.*** | Mikko.Karppinen@cern.ch |
| ***Responsible person at Ansaldo:*** | Gianluigi Gaggero | ***Tel.*** | +39 010 6489 210 |
| | | ***E-mail.*** | gaggero.gianluigi@as-g.it |

*Ansaldo certifies that the delivered material conforms to the technical specification mentioned above:*

| | | |
|---|---|---|
| ***Date: 20/01/04*** | ***Name: G. Gaggero*** | ***Signature:*** *Gianluigi Gaggero* |

**Acceptance test results**

| | | ***MQSX*** | ***Remarks:*** |
|---|---|---|---|
| ***RT dc resistance (Ω):*** | ***Ansaldo:*** | ***7,58*** | |
| | ***CERN:*** | ***7.59*** | |
| | ***CMA[1]:*** | 7.63 | VAHHAIIA 32-858 @ 10mA |
| ***Inductance @1 kHz/100 Hz (mH)*** | ***Ansaldo:*** | ***14.25*** | |
| | | ***14.25*** | |
| | ***CERN*** | ***14.24*** | |
| | | ***14.25*** | |
| | ***CMA:*** | 14,247 / 14,263 B | |
| ***R.T. leakage current to ground @ 1.5 kV (μA):*** | ***Ansaldo:*** | ***0.12*** | |
| | ***CERN:*** | ***0.003*** | |
| | ***CMA:*** | | |

| | **Cold Mass Assembler** | |
|---|---|---|
| ***Visual inspection*** | | **Accepted:** ☒ |
| ***Name / Signature*** | | **Rejected:** ☐ |
| ***Date*** | | |

| | |
|---|---|
| ***Comments (Ansaldo):*** | |

| | |
|---|---|
| ***Comments (CERN):*** | ***Magnetic axis have not been measured at warm.*** |
| | ***Scribe line made relative to the dowel pin holes on the conn. Plate. As the dowels are fully inserted the scribe line is not precisely drawn.*** |

| | |
|---|---|
| ***Comments (CMA):*** | |

**CERN**
CH-1211 Geneva 23
Switzerland

the **Large Hadron Collider** project

*AT MEL Document No.*
**LHC-MQSXA-FR-0001** rev. **1.0**

*EDMS Document No.*
---

# Certificate of Conformity

| | | | |
|---|---|---|---|
| ***Part name:*** | MCSOX Inner Triplet Corrector Package | | |
| ***LHC Identification No.:*** | HCMCSOX001-AN000008 | Serial No.: | HCMQSXA001-AN000008 |
| ***Shipped To:*** | CERN | ***Shipment No:*** | ***03*** |
| | | ***Shipment*** | ***20/01/04*** |
| ***Manufacturer:*** | Ansaldo | ***Order No.:*** | CD1000630 |
| ***Related tech. Specification:*** | LHC-MQSXA-CI-0001 and addenda | | |
| ***Related drawings:*** | LHCMQSXA0020 (620RM9837) | | |
| ***Responsible person at CERN:*** | Mikko Karppinen | ***Tel.*** | +41 22 767 4305 |
| | | ***E-mail.*** | Mikko.Karppinen@cern.ch |
| ***Responsible person at Ansaldo:*** | Gianluigi Gaggero | ***Tel.*** | +39 010 6489 210 |
| | | ***E-mail.*** | gaggero.gianluigi@as-g.it |

*Ansaldo certifies that the delivered material conforms to the technical specification mentioned above:*

| | | |
|---|---|---|
| ***Date: 20/01/04*** | ***Name: G. Gaggero*** | ***Signature:*** *Gianluigi Gaggero* |

**Acceptance test results**

| | | | ***MCOSX*** | ***MCOX*** | ***MCSSX*** | ***Remarks:*** |
|---|---|---|---|---|---|---|
| ***RT dc resistance (Ω):*** | ***Ansaldo:*** | | ***11.5*** | ***12.4*** | ***13.1*** | |
| | ***CERN:*** | | ***11.6*** | ***12.7*** | ***13.2*** | |
| | ***CMA[1]:*** | | 11.54 | 12.71 | 13.28 | VALHALLA 32-958 @ 10 mA |
| ***Inductance @1 kHz/100 Hz (mH)*** | ***Ansaldo:*** | | ***3.31*** ***3.31*** | ***4.48*** ***4.48*** | ***7.82*** ***7.82*** | |
| | ***CERN*** | | ***3.29*** ***3.30*** | ***4.48*** ***4.48*** | ***7.84*** ***7.85*** | |
| | ***CMA:*** | | 3.315 | 4.487 | 7.854 | 4263 B |
| ***R.T. leakage current to ground @ 1.5 kV (μA):*** | ***Ansaldo:*** | | ***0.11*** | ***0.09*** | ***0.04*** | |
| | ***CERN:*** | | ***0.009*** | ***0.01*** | ***0.002*** | |
| | ***CMA:*** | | | | | |

| | **Cold Mass Assembler** |
|---|---|
| ***Visual inspection*** | |
| ***Name / Signature*** | |
| ***Date*** | |

**Accepted:** ☒

**Rejected:** ☐

| | |
|---|---|
| ***Comments (Ansaldo):*** | |

| | |
|---|---|
| ***Comments (CERN):*** | ***Magnetic axis have not been measured at warm.*** |
| | ***Scribe line made relative to the dowel pin holes on the conn. plate. (the pins aren't well mounted so the scribe line is not very precisely drawn)*** |
| | ***The MCOSX busbar connection had to be repair and the connection plate modified.*** |

| | |
|---|---|
| ***Comments (CMA):*** | |

**Revision Request Control Number:** 1751

Specification Number: 5520 - TR - 333729 Current Revision: C

Traveler or Document Title LHC Q3 LMQXC Module Assembly Traveler

Step #/Description of Revision:

3.0 Modified Step. Changed title.
4.0 Added Step. Added steps per production request.
7.13 Removed Step. "Disassemble the MCBXA Corrector Magnet from the MCBXA Corrector Mounting Ring (ME-390037)." Per production request.
7.21 Removed Step. "Disassemble the MQSX Corrector Magnet from the MQSX Corrector Mounting Ring (MD-309209)." Per production request.
8.1 Removed Step. "Move the MQSX Corrector Magnet up against the Mounting Ring on the Q3 Cold Mass and bolt the MQSX Corrector Magnet to the Q3 Cold Mass using the Silver Plated Mounting Screw and torque bolts to 500 in.-lbs. Shim between the corrector and flange as necessary." Per production request.
8.2 Modified Step. Moved to after step 7.18. (New step 8.19)
8.4 Removed Step. "Solder Corrector Wires per Q3 Module Assembly (ME-369900) and as shown in Figure 8.5-A."
9.0 Changed Title to Final Corrector Preparations. per production request. (New Step 10.0.)
9.1 Modified Step. Removed "Move the MCBXA Corrector Magnet up against the Mounting Ring on the Q3 Magnet, and bolt the MCBXA Corrector Magnet to the Q3 Cold Mass using the 3" Silver Plated Mounting Screw (MA-390247) and " from step per production request. (New Step 10.1)
10.0 to 25.0 Modified Steps per production request and marked-up traveler.

| | | |
|---|---|---|
| John Szostak | Jim Rife | 7/8/2005 |
| Originator | Responsible Authority | Date |
| Revision Incorporated into the Traveler: | John Szostak | 7/13/2005 |
| | Revision Incorporated By | Date |
| Process Engineering Final Review: | Bob Jensen | 7/13/2005 |
| | Process Engineering/Designee | Date |

# Instructions for the completion of the Revision Request Form

Note(s):

Multiple steps may be effected by one Revision Request Form but only one specific Traveler or Document may be effected by each Revision Request Form.

If completing this form by hand, a Revision Request Control Number must be obtained before processing.

If completing this form entirely by electronic means, the printed copy to be filed in the Process Engineering Office is to be initialed by the individual incorporating the Revision Request and the individual who reviewed the Traveler or Document.

Originator Instructions:

1) Specification Number: - Enter the Specification Number of the Traveler or Document to be revised. (Document title is inserted automatically from the spec. #)

2) Current Revision: - Enter the Revision of the Traveler or Document to be revised.

3) Step# / Description of the Revision: - Enter a description of the revision to be made and the step# it applies to, if applicable. If needed to describe the revision attach a copy of the page(s). If the revision is coming from a related document such as a Discrepancy Report or an Engineering Order attach a copy of that document to the Revision Request Form.

4) Originator: - Originator is the person generating the form. (Select Name from List)

5) Responsible Authority: - Responsible Authority is person responsible for the process in question. (Select Name from List)

Process Engineering Office Instructions:

1) Revision Incorporated into the Traveler: - Signature of the individual who incorporated the revision.

2) Process Engineering Final Review: - Review the Traveler or Document revised, sign and date the form. The original completed Revision Request Form will be retained by the Process Engineering Office in the Revision Request Binder.

**Traveler Title:** LHC Q3 LMQXC Module Assembly Traveler

**Specification No:** 333729

**Revision:** B

**DR No:** 4243

**Step No:** 23.2

**Drawing No:** 369900

**Routing Form No:**

**Serial No:** LMQXC03

**Rework ID:** 0

**Discrepancy Description:**

The coil to heaters and ground hipot failed. It failed at 6 volts.

**Originator:** Steve Gould

**Date:** 5/26/2005

**Cause of Nonconformance:**

The bus assembly, as it enters the back of the spider, is insulated to protect it from the metal tube that exits the dome. The insulation consists of kapton surrounded by glass tape tied with kevlar string. A 1/16 inch thick layer of G-11 is enclosed layed on the bottom of the lead, and the glass tape surrounds it. On this magnet, the lead contacted the transition between the metal tube and the dome, slitting the glass tape, and allowing the copper lead slide out from under the G-11 strip. The lead is now contacting the dome, causing a ground short.

**Responsible Authority:** Rodger Bossert

**Date:** 5/27/2005

**Disposition:**

Remove dome (only front section). Re-insulate bus with a new system that will not allow the bus to contact the metal tube.
Disposition verify notes: (Re-issued TR-333729 LMQXC03-1 per production request. - John Szostak 6/20/05)

**Responsible Authority:** Rodger Bossert

**Date:** 5/27/2005

**Corrective Action to Prevent Recurrence:**

Correction made to LMQXC03 will need to be made to all future Q3 module assemblies.

**Responsible Authority:** Rodger Bossert

**Date:** 5/27/2005

**Corrective Action/Disposition Verified By:** John Szostak

**Date:** 6/20/2005 11:17:46 AM

**Will Configuration be affected?:** ☐ YES ☑ NO

**Identified problem area:**

☐ Material ☐ Manpower ☑ Method ☐ Machine ☐ Measurement

**Reviewed By:** Bob Jensen

**Date:** 11/7/2005

| Traveler Title: | Specification No: | Revision: | DR No: |
|---|---|---|---|
| LHC Q3 LMQXC Module Assembly Traveler | 333729 | B | 4211 |

| Step No: | Drawing No: | Routing Form No: | Serial No: | Rework ID: |
|---|---|---|---|---|
| 19.25 | ME-390529 | | LMQXC03 | 0 |

**Discrepancy Description:**

Measurement in step 19.25 did not agree with total recorded in step 19.23. Measurement recorded in step 19.23 was 2346.5. Actual measurement was 2339.

**Originator:** Damon Bice

**Date:** 5/16/2005

**Cause of Nonconformance:**

Mistaken reading when taking measurements in step 19.10.

**Responsible Authority:** Damon Bice

**Date:** 5/16/2005

**Disposition:**

Reconstructed measurement using the vacuum vessel alone and concluded the earlier measurement of 2016 mm was incorrect.

**Responsible Authority:** Thomas Nicol

**Date:** 5/16/2005

**Corrective Action to Prevent Recurrence:**

Change traveler step(s) to measure two places from the face of the IP/Non-IP End Vacuum Vessel Flange to the inside surface of the IP/Non-IP End Suspension System's G-11. (or Sliding Support). (TRR No. 1766)

**Responsible Authority:** Thomas Nicol

**Date:** 5/16/2005

**Corrective Action/Disposition Verified By:** Bob Jensen

**Date:** 5/16/2006 2:54:45 PM

**Will Configuration be affected?:** ☐ YES ☑ NO

**Identified problem area:**

☐ Material ☐ Manpower ☐ Method ☐ Machine ☑ Measurement

**Reviewed By:** Bob Jensen

**Date:** 5/16/2006

| Traveler Title: | Specification No: | Revision: | DR No: |
|---|---|---|---|
| LHC Q3 LMQXC Module Assembly Traveler | 333729 | B | 4209 |

| Step No: | Drawing No: | Routing Form No: | Serial No: | Rework ID: |
|---|---|---|---|---|
| 20 | MB-369900 | | LMQXC03 | 0 |

**Discrepancy Description:**

RTD TT8323 did not give a stable measurement reading during its resistance check.

**Originator:** Damon Bice

**Date:** 5/19/2005

**Cause of Nonconformance:**

RTD is broken (inifinite resistance across RTD).

**Responsible Authority:** Andy Hocker

**Date:** 5/20/2005

**Disposition:**

A new RTD will be installed inside the heat exchanger pipe at the lead end.

**Responsible Authority:** Andy Hocker

**Date:** 5/20/2005

**Corrective Action to Prevent Recurrence:**

None, reason for failure unknown.

**Responsible Authority:** Andy Hocker

**Date:** 5/20/2005

---

**Corrective Action/Disposition Verified By:** John Szostak

**Date:** 7/26/2005 8:55:21 AM

**Will Configuration be affected?:** ☐ YES ☑ NO

---

**Identified problem area:**

☐ Material ☐ Manpower ☐ Method ☐ Machine ☑ Measurement

**Reviewed By:** Bob Jensen

**Date:** 11/7/2005

| Traveler Title: | Specification No: | Revision: | DR No: |
|---|---|---|---|
| LHC Q3 LMQXC Module Assembly Traveler | 333729 | B | 4173 |

| Step No: | Drawing No: | Routing Form No: | Serial No: | Rework ID: |
|---|---|---|---|---|
| 12.9 | ME-390529 | | LMQXC03 | 0 |

**Discrepancy Description:**

The holes that bolt the crossover block assembly to the corrector are not longitudinally aligned with each other.

**Originator:** Damon Bice

**Date:** 3/30/2005

**Cause of Nonconformance:**

Holes in corrector were not place din the standard position by manufacturer.

**Responsible Authority:** Rodger Bossert

**Date:** 9/1/2005 9:06:03 AM

**Disposition:**

Drill new hole in crossover block base which is lined with existing hole in corrector.

**Responsible Authority:** Rodger Bossert

**Date:** 9/1/2005

**Corrective Action to Prevent Recurrence:**

Correctors are already manufactured. If this occurs in the future, the same disposition will be applied.

**Responsible Authority:** Rodger Bossert

**Date:** 9/1/2005

**Corrective Action/Disposition Verified By:** John Szostak

**Date:** 9/15/2005 12:51:03 PM

**Will Configuration be affected?:** ☐ YES ☑ NO

**Identified problem area:**

☑ Material ☐ Manpower ☐ Method ☐ Machine ☐ Measurement

**Reviewed By:** Bob Jensen

**Date:** 11/7/2005

**Traveler Title:** LHC Q3 LMQXC Module Assembly Traveler

**Specification No:** 333729

**Revision:** B

**DR No:** 4163

**Step No:** N/A

**Drawing No:** ME-369900

**Routing Form No:** 81846

**Serial No:** LMQXC03

**Rework ID:** 0

**Discrepancy Description:**

While checking in the Parts kit for LMQXC03, it was discovered that the NON-IP END BODY EXTENSION WELDMENT(ME-390667) had a Leak Check sticker attached to it (still in the wooden crate) with the part number 390668.

**Originator:** John Szostak

**Date:** 3/4/2005

**Cause of Nonconformance:**

The leak check label was filled out with the wrong part number.

**Responsible Authority:** John Szostak

**Date:** 3/4/2005

**Disposition:**

It is the correct part, so use the part as is. The part will be leak checked during assembly.

**Responsible Authority:** Thomas Page

**Date:** 3/7/2005

**Corrective Action to Prevent Recurrence:**

None at this time. We note that Material Control folks opened up all the crates in storage and verified that the parts in inventory have the correct part number applied - one tag was found with the wrong part number, and that has been corrected (J.Blowers 01-Apr-2005).

**Responsible Authority:** Thomas Page

**Date:** 3/7/2005

**Corrective Action/Disposition Verified By:** John Szostak

**Date:** 3/31/2005

**Will Configuration be affected?:** ☐ YES ☑ NO

**Identified problem area:**

☐ Material ☑ Manpower ☐ Method ☐ Machine ☐ Measurement

**Reviewed By:** Jamie Blowers

**Date:** 4/1/2005

# Cryogenic Thermometer Traveller

## DESCRIPTION

| | | | |
|---|---|---|---|
| **Part description:** | Cryogenic thermometer | **Top Assembly Identification:** | LMQXC03 |
| **Part Identification:** | HCQITESCXT-CR013670 | **Manufactured By:** | Fermilab |
| **Serial Number:** | CX_LS_X17252 | | |

## CABLING

**Connector Tag Name** TT 8323

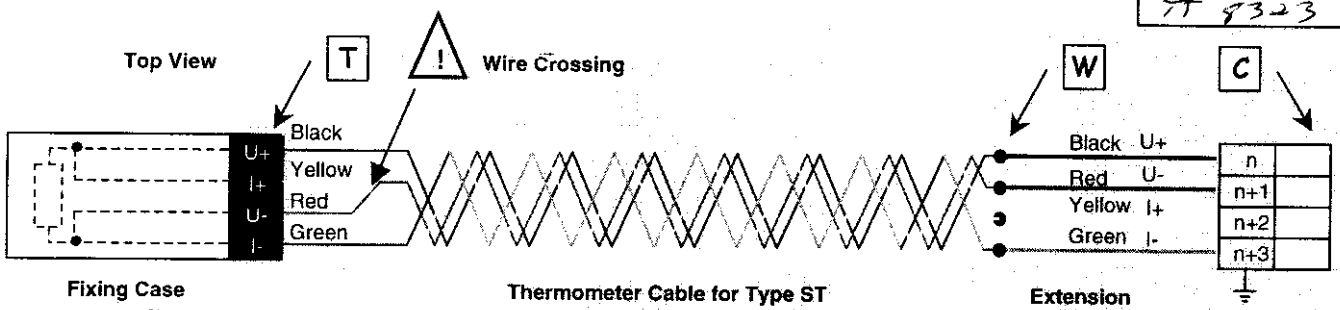


**Fixing Case**

Thread ☐
Hole ☐
Stud ☐

**Thermometer Cable for Type ST**

ρ (300 K) = 0.32 Ohm/m
Copper AWG 30
Length = ☐ m

**Extension**

ρ (300 K) = 0.07 Ohm/m
Copper AWG 24
Length: 0.8 m

## CHECKS

| Intervention | Date/ DD-MMM-YYYY | Check Point | R(U+,U-,I+,I-) [Ohm] 4W | R(U-,I-) [Ohm] 2W | R(U+,I+) [Ohm] 2W | R(U+,GND) [Ohm] 2W | Temperature [K] | Firm/Laboratory | Checked by |
|---|---|---|---|---|---|---|---|---|---|
| Calibration | 04-Feb-2002 | T | 65.91 | n.a | n.a | OVL | Ambient | IPN | Joly |
| Expedition | 12-Mar-2003 | T | 64.533 | 0.1 | 0.1 | OVL | 293 | CERN | Grivat |
| Reception | 15-MAR-2005 | T W C | 66.84 | | | | 70° | Fermi | W Schw |
| | | T W C | | | | | | | |
| | | T W C | | | | | | | |
| | | T W C | | | | | | | |
| | | T W C | | | | | | | |
| | | T W C | | | | | | | |
| | | T W C | | | | | | | |
| | | T W C | | | | | | | |
| | | T W C | | | | | | | |
| | | T W C | | | | | | | |
| | | T W C | | | | | | | |
| | | T W C | | | | | | | |
| | | T W C | | | | | | | |
| | | T W C | | | | | | | |
| | | T W C | | | | | | | |
| | | T W C | | | | | | | |
| | | T W C | | | | | | | |
| | | T W C | | | | | | | |
| | | T W C | | | | | | | |
| | | T W C | | | | | | | |
| | | T W C | | | | | | | |
| | | T W C | | | | | | | |
| | | T W C | | | | | | | |
| | | T W C | | | | | | | |
| | | T W C | | | | | | | |

# Cryogenic Thermometer Traveller

## DESCRIPTION

| | | | |
|---|---|---|---|
| **Part description:** | Cryogenic thermometer | **Top Assembly Identification:** | LMQXC03 |
| **Part Identification:** | HCQITESCXT-CR013680 | **Manufactured By:** | Fermilab |
| **Serial Number:** | CX_LS_X17253 | | |

## CABLING

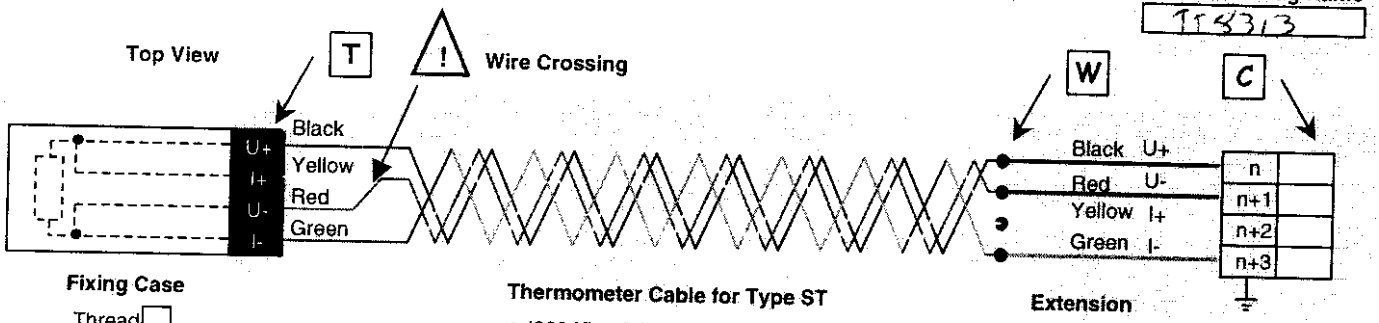


**Fixing Case**

Thread ☐
Hole ☐
Stud ☐

**Thermometer Cable for Type ST**

ρ (300 K) = 0.32 Ohm/m
Copper AWG 30
Length = ☐ m

**Extension**

ρ (300 K) = 0.07 Ohm/m
Copper AWG 24
Length: 0.8 m

## CHECKS

| Intervention | Date/ DD-MMM-YYYY | Check Point | R(U+,U-,I+,I-) [Ohm] 4W | R(U-,I-) [Ohm] 2W | R(U+,I+) [Ohm] 2W | R(U+,GND) [Ohm] 2W | Temperature [K] | Firm/Laboratory | Checked by |
|---|---|---|---|---|---|---|---|---|---|
| *Calibration* | *04-Feb-2002* | T | *64.22* | *n.a* | *n.a* | *OVL* | *Ambient* | *IPN* | *Joly* |
| *Expedition* | *12-Mar-2003* | T | *62.819* | *0.1* | *0.1* | *OVL* | *293* | *CERN* | *Grivat* |
| *Reception* | | T W C | 65260 | | | | 70° | Fermi | W. S[illegible] |
| | | T W C | | | | | | | |
| | | T W C | | | | | | | |
| | | T W C | | | | | | | |
| | | T W C | | | | | | | |
| | | T W C | | | | | | | |
| | | T W C | | | | | | | |
| | | T W C | | | | | | | |
| | | T W C | | | | | | | |
| | | T W C | | | | | | | |
| | | T W C | | | | | | | |
| | | T W C | | | | | | | |
| | | T W C | | | | | | | |
| | | T W C | | | | | | | |
| | | T W C | | | | | | | |
| | | T W C | | | | | | | |
| | | T W C | | | | | | | |
| | | T W C | | | | | | | |
| | | T W C | | | | | | | |
| | | T W C | | | | | | | |
| | | T W C | | | | | | | |
| | | T W C | | | | | | | |
| | | T W C | | | | | | | |
| | | T W C | | | | | | | |

In Case of problem, do not hesitate to contact Responsible person at CERN. Tel.: 41-22-767-4[illegible]

**Revision Request Control Number:** 1827

Specification Number: 5520 - TR - 333729 Current Revision: F

Traveler or Document Title LHC Q3 LMQXC Module Assembly Traveler

Step #/Description of Revision:

Step 22 After attachment of the spider assembly, bus resistance will be measured to ensure correct routing. See DR4294
Step 22 Coil mass resistance measurements will be modified to include polarity check. See DR4294

| Bob Jensen | Bob Jensen | 5/23/2006 |
|---|---|---|
| Originator | Responsible Authority | Date |

Revision Incorporated into the Traveler:

| | | |
|---|---|---|
| | Revision Incorporated By | Date |

Process Engineering Final Review:

| | | |
|---|---|---|
| | Process Engineering/Designee | Date |

# Instructions for the completion of the Revision Request Form

Note(s):

Multiple steps may be effected by one Revision Request Form but only one specific Traveler or Document may be effected by each Revision Request Form.

If completing this form by hand, a Revision Request Control Number must be obtained before processing.

If completing this form entirely by electronic means, the printed copy to be filed in the Process Engineering Office is to be initialed by the individual incorporating the Revision Request and the individual who reviewed the Traveler or Document.

Originator Instructions:

1) Specification Number: - Enter the Specification Number of the Traveler or Document to be revised. (Document title is inserted automatically from the spec. #)

2) Current Revision: - Enter the Revision of the Traveler or Document to be revised.

3) Step# / Description of the Revision: - Enter a description of the revision to be made and the step# it applies to, if applicable. If needed to describe the revision attach a copy of the page(s). If the revision is coming from a related document such as a Discrepancy Report or an Engineering Order attach a copy of that document to the Revision Request Form.

4) Originator: - Originator is the person generating the form. (Select Name from List)

5) Responsible Authority: - Responsible Authority is person responsible for the process in question. (Select Name from List)

Process Engineering Office Instructions:

1) Revision Incorporated into the Traveler: - Signature of the individual who incorporated the revision.

2) Process Engineering Final Review: - Review the Traveler or Document revised, sign and date the form. The original completed Revision Request Form will be retained by the Process Engineering Office in the Revision Request Binder.

Document ID:

7963

# LHC Q3 LMQXC Module Assembly Traveler

# 333729 / Rev. C

**Job No:** **248**

**E + F Project/Task No.:** **300/1.1.1.6.2**

**M + S Project/Task No.:** **300/1.1.1.6.2**

**Place This Side Down For Scanning!!!**

Magnet Travelers

# LMQXC03-1

Document ID:

7963

Job No.:

248

Project/Task No.

300/1.1.1.6.2

Series:

LQXC

Serial No:

LMQXC03

Rework ID:

1

Specification No.:

333729

Revision:

C

# LMQXC03-1

**Fermi National Accelerator Laboratory**
**Batavia, IL 60510**

# LARGE HADRON COLLIDER
# Q3 - LMQXC
# COLD MASS MODULE ASSEMBLY TRAVELER

## Reference Drawing(s):
## Q3 Cold Mass Welded Assembly (ME-390529)
## Q3 Module Assembly (ME-369900)

**Project/Task Number:** *300/1.1.1.6.2*

**Released By:** *John Szostak* **Magnet/Device Series:** *LQXC*

**Date Issued:** *6/20/2005 12:51:55 PM* **Scanned Pages:** 106

**Prepared by:** J. Szostak

| Title | Signature | Date |
|---|---|---|
| TD / E&F Process Engineering | *Jamie Blowers*<br>Bob Jensen / Designee | *6/8/05* |
| TD / LHC Production Supervisor | *Jim Rife*<br>Jim Rife / Designee | *6/8/05* |
| TD / LHC Production Engineer | *Rodger Bossert*<br>Rodger Bossert / Designee | *6/8/05* |
| TD / LHC Project Engineer Cryostat | *Tom Nicol*<br>Tom Nicol / Designee | *6/8/05* |
| TD / LHC Project Physicist | *Andy Hocker*<br>Michael Lamm / Designee | *6/8/05* |
| TD / LHC Program Manager | *Phil Pfund*<br>Jim Kerby / Designee | *6/8/05* |

**Revision Page (1 of 3)**

| Revision | Step No. | Revision Description | TRR No. | Date |
|---|---|---|---|---|
| None | N/A | Initial Release | N/A | 8/20/04 |
| A | 5.0 | Modified Step. Modified to reflect production floor process. | 1682 | 12/15/04 |
| | 9.2 | Modified Step. Changed to Crew Chief signoff. | | |
| | 9.3 | Modified Step. Changed to Weldor signoff. | | |
| | 12.3 | Modified Step. Added "...and Figure 12.0." | | |
| | 15.2 | Modified Step. Changed to "Using the Valhalla 4300B, connect 10mA applied voltage thru the corrector Power Leads. Measure Resistance and record in the table below." Modified Table. Added Picture of Corrector Bus Leads. | | |
| | 17.1 | Modified Step. Changed (MC-369552) to (MC-369522). | | |
| | 17.4 | Modified Step. Changed IP to Non-IP. | | |
| | 17.6 | Modified Step. Changed IP to Non-IP. | | |
| | 17.7.2 | Modified Step. Changed Non-IP to IP. | | |
| | 17.8 | Modified Step. Changed Non-IP to IP. | | |
| | 17.10 | Modified Step. Changed Non-IP to IP. | | |
| | 18.9 | Added Step. "Tack weld the Extension Tube (MD-390667) to the Cold Mass per (ME-390529)." | | |
| | 18.11 | Added Step. "Weld the Extension Tube (MD-390667) to the Cold Mass per (ME-390529)." | | |
| | 19.9 | Modified Step. Changed to "Measure the distance between the Suspension Rings at the bottom of the Threaded Rods and record measurements below. Copy this page and place copy in designated book for later reference. (TR-333730, Q3 Cryostat Final Assembly, Step 5.1)." | | |
| | 19.17 | Modified Step. Changed Non-IP to IP. | | |
| | 19.18 | Modified Step. Removed Center – North and Center – South. | | |
| | 19.21 | Removed Step. "Weld the Shielding Blocks (MB-390534) to the Cold Mass per Q3 Suspension System Installation (ME-390525)." No shielding Blocks | | |
| | 19.22 | Modified Step. Added 112.5. | | |
| | 19.23 | Modified Step. Added 337.5. | | |
| | 21.1 | Modified Step. Modified Resistance Table. | | |
| | 21.2 | Modified Step. Changed to "Using the Valhalla 4300B, connect 10mA applied voltage thru the corrector Power Leads. Measure Resistance and record in the table below." Modified Table. Added Picture of Corrector Bus Leads. | | |
| | 22.2 | Added Step. Added "Assemble/Install Hypertronics Connectors, **without Cover** at **IP End** as per Q3 Module Assembly (ME-369900). Pin Numbers for connectors are shown in Table 22.2 below." | | |
| | 22.3 | Added Step. "Inspect Hypertronics Connector. Ensure that it is free of flux and that Kapton has been installed properly." | | |
| | 22.4 | Added Step. "After LHC Project Physicist / designee has signed the above step, complete the installation of the Hypertronics." | | |
| | 23.2 | Modified Step. Changed to "Using the Valhalla 4300B, connect 10mA applied voltage thru the corrector Power Leads. Measure Resistance and record in the table below." Modified Table. Added Picture of Corrector Bus Leads. | | |
| | 23.4 | Added Step. "Ensure electrical measurements are acceptable and confirm Hypertronics Connector has been installed properly." | | |

**Revision Page (2 of 3)**

| Revision | Step No. | Revision Description | TRR No. | Date |
|---|---|---|---|---|
| B | 1.6 | Added Step. "Protect the bellows during all stages of production." **DR No. HGQ-0500.** | 1695 | 3/4/05 |
| | 7.6 | Removed Step. Moved to after electrical. New step 7.8. | | |
| | 7.0 to 17.0 | Modified order of steps per production request. (Subsequent changes to steps will reflect new Step Numbers) | | |
| | 7.14 | New step. "Splice Cold mass voltage taps to wire bundle. Verify splices electrically." Per LMQXC02. | | |
| | 7.15 | New step. "Attach wires using putty and install the Voltage Tap Splice Cover Block (MC-430146)." Per LMQXC02. | | |
| | 9.5 | Added Step. "Solder Corrector Wires per Q3 Module Assembly (ME-369900) and as shown in Figure 9.4-A." | | |
| | 9.6 | Added Step. "Install voltage taps on MCBXA corrector leads. One tap is to be soldered to the "A" Lead of each corrector element. Wire labels are shown below." | | |
| | 11.12 | Modified Step. Added check boxes and specifications for measurements taken with Mini-level. | | |
| | 12.1 | Modified Step. Added picture, (ME-369900 - Rev. A, Sheet 3 of 5), per production request. | | |
| | 12.11 | Added Step. "Solder MQSX Corrector Wires." | | |
| | 12.13 | New Step. "At the IP End, attach Spider Assembly (MD-430072) as per Q3 Module Assembly (ME-369900)." | | |
| | 15.3 | New Step. "At the Non-IP End, attach Spider Assembly (MB-430096) as per Q3 Module Assembly (ME-369900)." **Per DR No. HGQ-0520.** | | |
| | 16.2 | Modified Step. Added "Record Initial resistance of Corrector Element and record below." Added column to record initial resistance of Corrector Element. | | |
| | 16.3 | Added Step. "Attach Backing Splines as per Q3 Module Assembly (ME-369900)." | | |
| | 16.4 | Added Step. "At the IP End (Lead End) wrap the Springboard Assemblies in Kapton and then wrap with Kevlar String (MA-369912) every ½ - ¾" over Kapton as per Q3 Module Assembly (ME-369900)." | | |
| | 16.5 | Added Step. "At the Non-IP End (Non-Lead End) wrap the Springboard Assemblies in Kapton and then wrap with Kevlar String (MA-369912) every ½ - ¾" over Kapton as per Q3 Module Assembly (ME-369900)." | | |
| | 17.3 | Modified Step. Moved Step per production request. "Position the Beam Tube (MC-369522) longitudinally per Q3 Cold Mass Welded Assembly (ME-390529)." New Step 20.1 | | |
| | 19.2 | Modified Step. Changed to "Insert the Fixed Support Assembly (ME-390041) into the Vacuum Vessel and position at the IP End." | | |
| | 19.5 | Modified Step. Changed to "Insert the Sliding Support Assembly (ME-390042) in to the Vacuum Vessel and position at the Non-IP End." | | |
| | 20.8 | Modified Step. Changed to "Perform a stretched wire measurement of the system to align the Beam Tube Flange within ± .5 mm." | | |
| | 21.2 | New Step. "Check Q1 & Q2 Instrumentation Bus Wires for Continuity." Added Table. | | |
| | 21.3 | Modified Step. Added "Record Initial resistance of Corrector Element and record below." Added column to record initial resistance of Corrector Element. | | |
| | 22.1 | Modified Step. Changed Picture of "Hypertronics Connector Pin Locations (Q3 non-IP end) VIEW: Male (pin) solder cup side" to show correct hookup configuration to DFBX. | | |
| | 23.0 | Modified Step. Removed electrical checks that are previously performed by MTF, per production request. | | |

**Revision Page (3 of 3)**

| Revision | Step No. | Revision Description | TRR No. | Date |
|---|---|---|---|---|
| C | 7.6 | Modified Step. Modified Table. Added Column for RTD Serial Number per LHC Production Supervisor. | 1721 | 6/8/05 |
| | 7.14 | Modified Step. Added electricals performed by MTF. | | |
| | 22.3 | Modified Step. Added electricals performed by MTF. | | |
| | 19.3 | Modified Step. Changed to "Install the Suspension System Adjusting Screws (MB-390039) and Socket Head Cap Screws (MA-393021) into the Vacuum Vessel to hold the Fixed Support Assembly in place. Coat all screw threads with Molybdenum Disulfide prior to installation." Per production request. | | |
| | 19.6 | Modified Step. Changed to "Install the Suspension System Adjusting Screws (MB-390039) and Socket Head Cap Screws (MA-393021) into the Vacuum Vessel to hold the Fixed Support Assembly in place. Coat all screw threads with Molybdenum disulfide prior to installation." Per production request. | | |

**Ensure appropriate memos and specific instructions are placed with the traveler before issuing the sub traveler binder to production.**

1.0 General Notes

1.1 All steps that require a sign-off shall include the Technician/Technician(s)s first initial and full last name.

1.2 No erasures or white out will be permitted to any documentation. All incorrectly entered data shall be corrected by placing a single line through the error, initial and date the error before adding the correct data.

1.3 All Discrepancy Reports issued shall be recorded in the left margin next to the applicable step.

1.4 Personnel shall perform all tasks in accordance with current applicable ES&H guidelines and those specified within the step.

1.5 Cover the product/assembly with Green Herculite (Fermi stock 1740-0100) when not being serviced or assembled.

1.6 Protect the Bellows during all stages of production.

2.0 Parts Kit List

2.1 Attach the completed Parts Kit for this production operation to this traveler. Ensure that the serial number on the Parts Kit matches the serial number of this traveler. Verify that the Parts Kit received is complete.

_____ _____
Process Engineering/Designee Date

3.0 Q3 Module Alignment

3.1 Record the serial number for each Magnetic Component Assembly.

Q3 Serial Number: _____

**MCBXA** Corrector Coil Serial Number: _____

**MQSX** Corrector Coil Serial Number: _____

**MCSOX** Corrector Coil Serial Number: _____

_____ _____
Responsible Authority/Physicist Date

3.2 Attach the Certificate of Conformity, for vendor supplied components, and the Quality Record, for vendor supplied components, to this traveler.
Verify that the Certificate of Conformity and /or the Quality Record (as required) has been filled out and performed by Fermilab personnel.

_____ _____
Crew Chief Date

4.0 Q3 Magnet Placement (Module Assembly Tooling)

4.1 Configure tooling for Q3 Cold Mass Assembly (ME-390528) per Final Cold Mass Assembly Stat – Support and Clamping Fixture (ME-369768).

_____ _____
Technician(s) Date

4.2 Configure tooling for Corrector Mounting per Cold Mass / Cryostat Station Corrector Support Fixture (ME-369780), 13.780 Diameter Corrector Magnet.

_____ _____
Technician(s) Date

4.3 Configure tooling for End Dome Mounting per Cold Mass Cryostat Station Final Assembly (ME-369765, View E-E).

_____ _____
Technician(s) Date

4.4 Move the Q3 Cold Mass to the Cold Mass Module Assembly Tooling, placing it nearest the West End of ICB, with the Lead End of the Magnet facing west as per Q3 Cold Mass Welded Assembly (ME-390529).

_____ _____
Technician(s) Date

5.0 Bus Assembly Installation

5.1 Measure the length of the Cold Mass and record below.

**Cold Mass Length:** _____

Technician(s) _____ Date _____

5.2 Add four feet (48 inches) to the Cold Mass Length and record below. This will be the top piece.

**Cold Mass Length from step 5.1:** _____

**Add:** **+ 48 in.**

**Length of top piece:** _____

Technician(s) _____ Date _____

Crew Chief _____ Date _____

5.3 Cut a piece of Nomex (MB-430064) equal to the total length recorded in step 5.2. This will be referred to as the top piece.

Technician(s) _____ Date _____

5.4 Record the total length of the top piece, recorded in step 5.2, below. Multiply the total by 2 and record the number below. This will be the length of the bottom piece.

**Length of top piece:** _____

**Multiply by 2:** **x 2**

**Length of bottom piece:** _____

Technician(s) _____ Date _____

Crew Chief _____ Date _____

5.5 Cut a piece of Nomex (MB-430064) equal to the total length recorded in step 5.4. This will be referred to as the bottom piece.

Technician(s) _____ Date _____

5.6 Pull the two pieces of Nomex (MB-430064) through the Bus Slot. Leave two feet of Nomex extending past the end of the Cold Mass at the Lead End and Non-Lead End. Fold top piece over top of Cold Mass and fold bottom piece under bottom of Cold Mass. (As shown n figure 5.6 below)

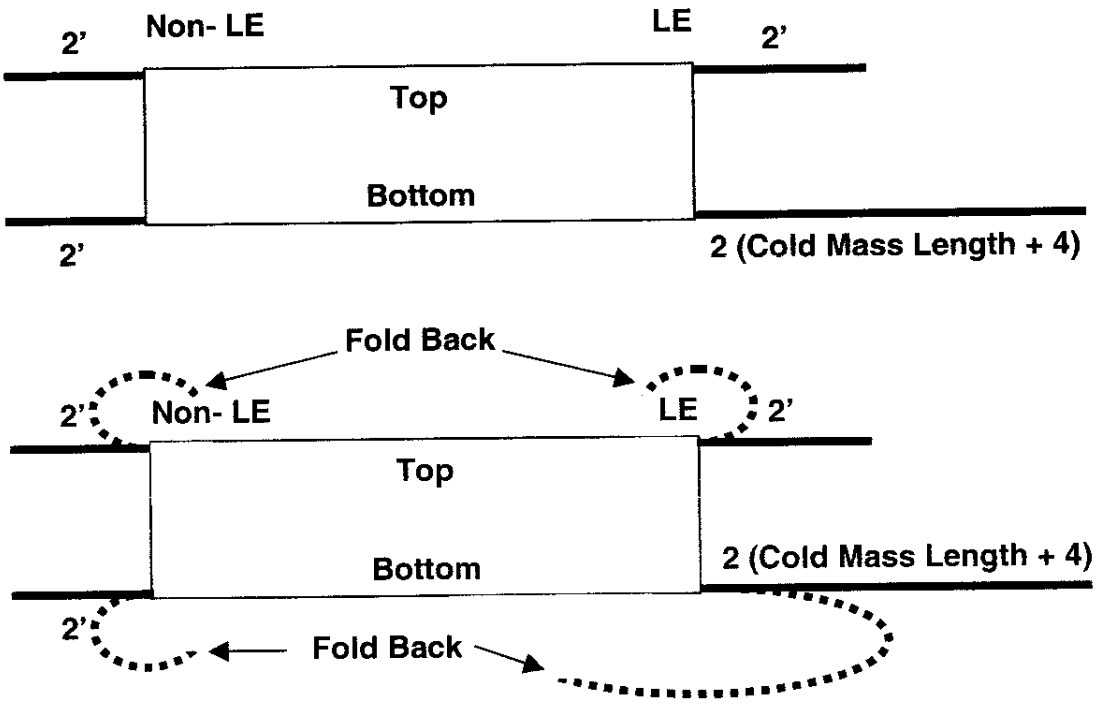


**Figure 5.6**

Technician(s) _____ Date _____

5.7 Starting at the Lead End, slide the Lead and Corrector Coil Bus Assembly (MB-430065) into Magnet Bus Slot between the two pieces of Nomex (MB-430064). The bottom piece of Nomex will move with the bus. Pull the bottom piece as it is being fed into the Cold Mass.

Technician(s) _____ Date _____

5.8 Cut Nomex (MB-430064) equal to the Length of the Cold Mass. (See Step 5.1 for reference)

Technician(s) _____ Date _____

6.0 Q3 Cold Mass Alignment

6.1 Rotate the Q3 Cold Mass, with the Power Leads facing up, into the proper orientation as shown in Figure 6.1-A.

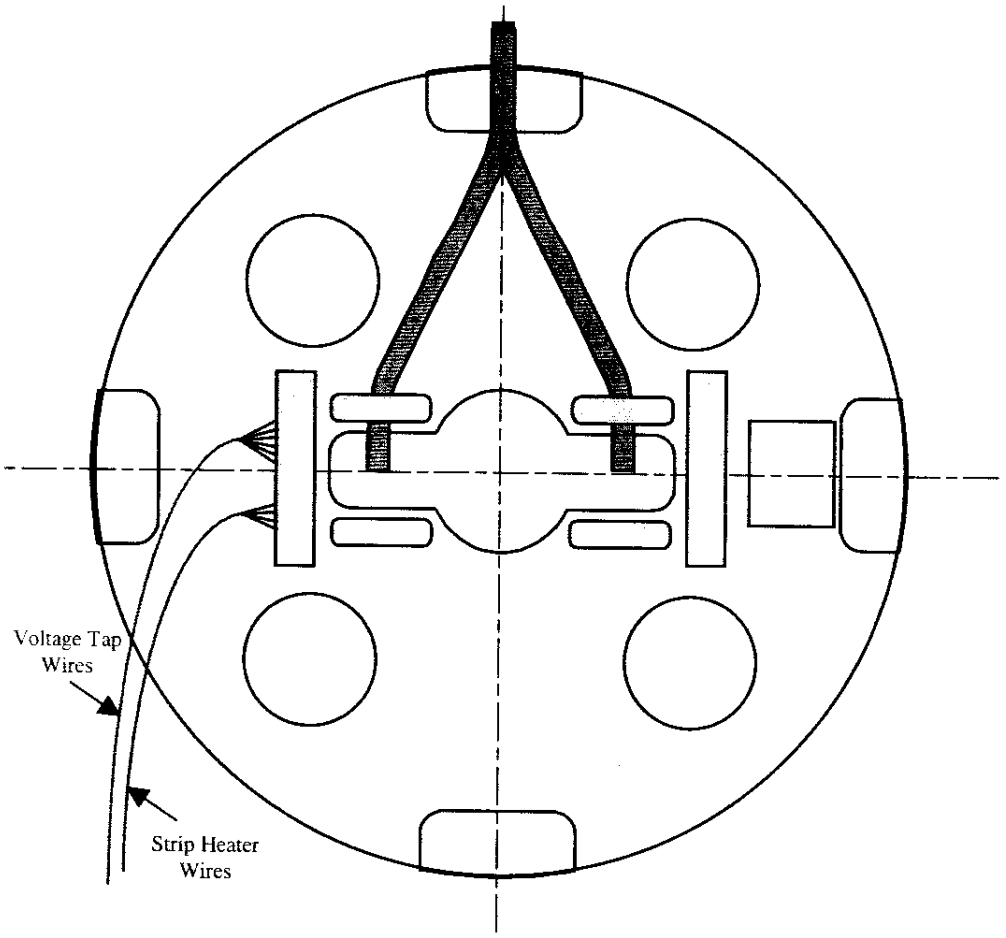


**Looking at Lead End of Q3**

**Figure 6.1-A**

Technician(s) _____ Date _____

6.2 Perform a stretched wire measurement of the system to align the Cold Mass within ± .2 mR.

Responsible Authority/Physicist _____ Date _____

7.0 Instrumentation Installation

7.1 Prepare Q3 Instrumentation Wire Feed thru (MB-430074). Build per Q3 Module Assembly Instrumentation Wire Feed thru (ME- 430074). Wire Labels and descriptions are shown in Figure 7.1 and per (MB-430074).

**Note(s):**

**USE ONLY CERN LABELS ON WIRES.**

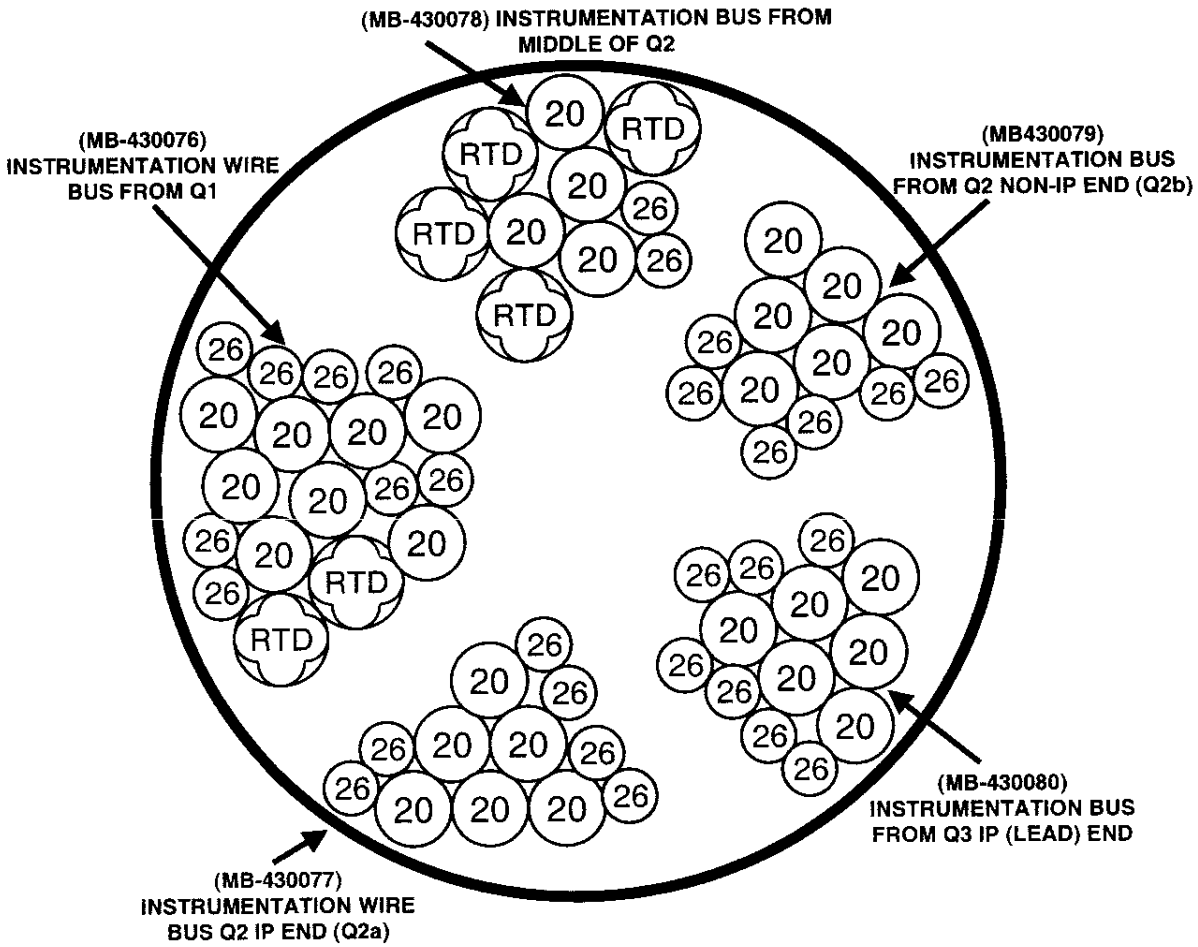


**Figure 7.1**
**INSTRUMENTATION TUBE**

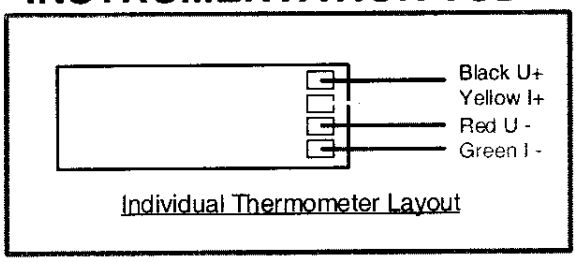


Technician(s) _____ Date _____

7.2 Slide Instrumentation Bus Assembly (MB-430074) into the proper Q3 Port as per Q3 Module Assembly (ME-369900). Verify that there is sufficient slack in cable to allow for two inches of differential thermal contraction.

_____ _____
Technician(s) Date

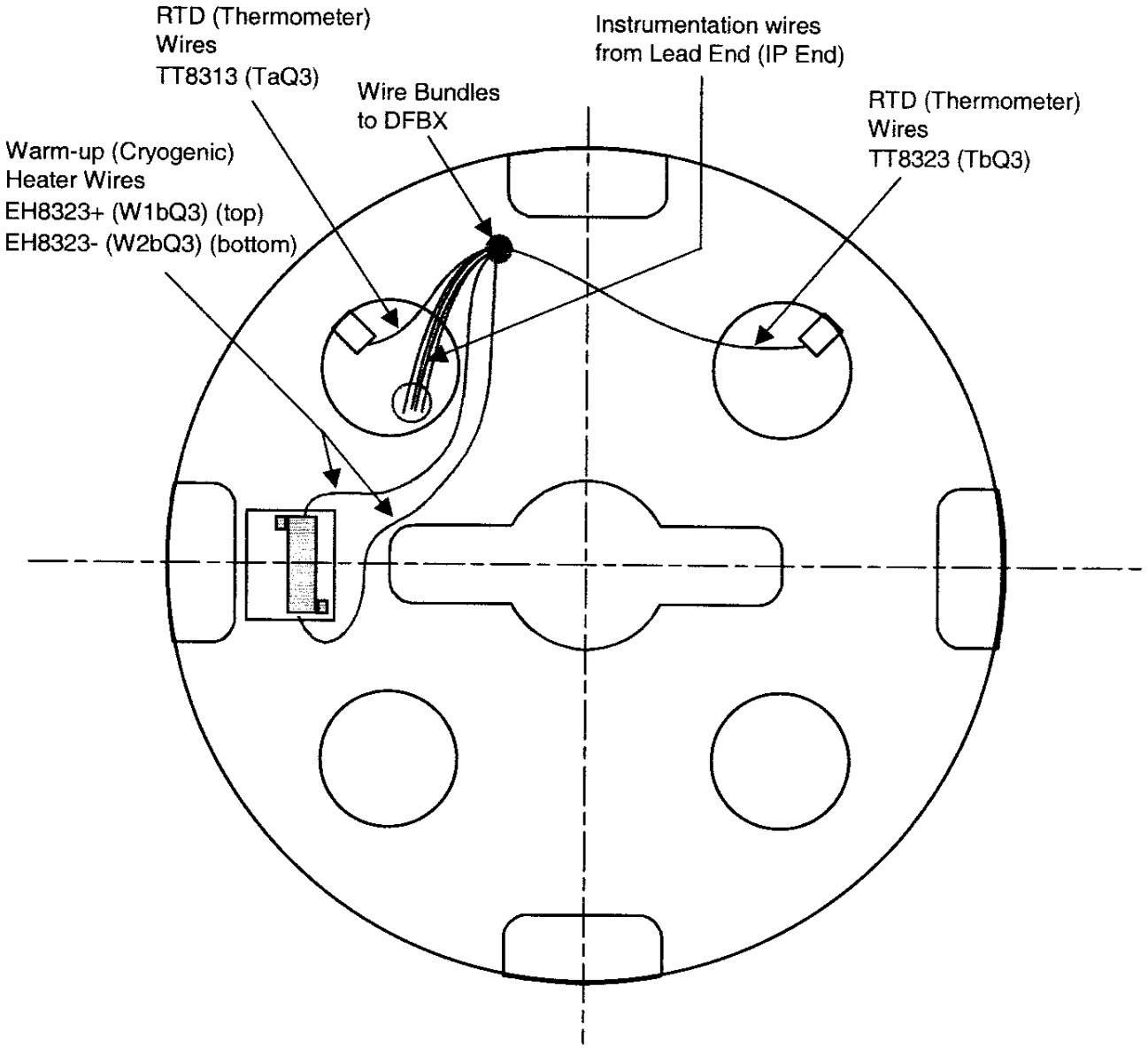


**Looking at Non-Lead End (Non-IP End) of Q3**

# Figure 7.2-A

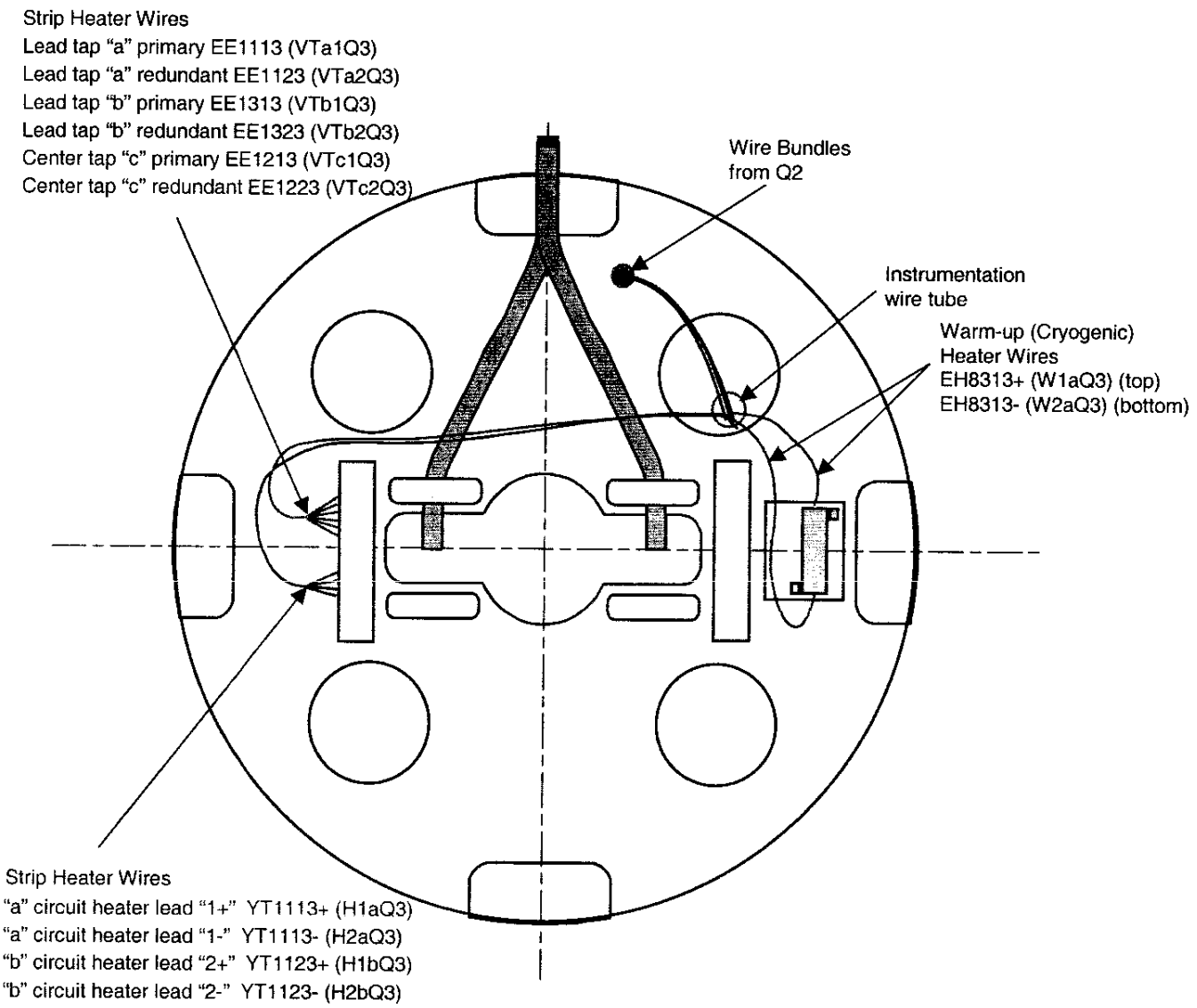


**Looking at Lead End (IP end) of Q3**

# Figure 7.2-B

7.3 Weld Warm-up Heater Base Plates (MA-369997) and RTD Mount Blocks to End Plates as per Q3 Module Assembly (ME-369900).

Weldor(s) _____ Date _____

7.4 Install Warm-up Heaters (ME-369834) to each end of Q3 as per Q3 Module Assembly (ME-369900).

7.4.1 Install Warm-up Heaters (MA-369834) onto the Warm-up Heater Base Plate (MA-369997).

7.4.2 Solder wires (MA-369832) to the Warm-up Heaters as per (ME-369900).

Technician(s) _____ Date _____

7.5 Install RTD's as per Q3 Module Assembly (ME-369900). Record Serial Numbers of each RTD in the table below. Attach Data Sheet for each RTD to traveler.

7.5.1 Attach RTD's (MA-369835) (Qty. 4) to Mounting Blocks as per Q3 Module Assembly (ME-369900).

7.5.2 Solder wires (MA-369836) to RTD's as per Q3 Module Assembly (ME-369900). Individual RTD wiring is shown in Figure 7.5.2-A below.

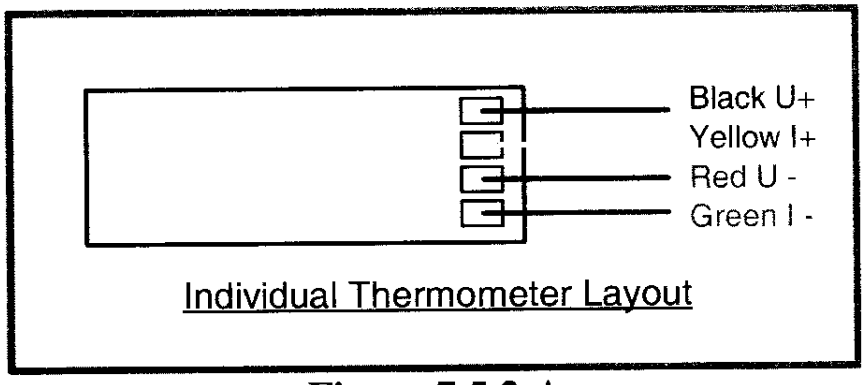


**Figure 7.5.2-A**

Technician(s) _____ Date _____

7.6 Perform a continuity check on all RTD's and Warm-Up Heaters. Record the Data below. (1mA). Record the resistance data from the Manufacturer's Traveler below. Compare RTD resistance test results to the resistance results from the Manufacturer's Traveler. Ensure RTD resistances are within **5Ω**. Attach the Manufacturer's RTD papers at the end of this traveler.

**To measure the resistance of a Thermometer (RTD):**

1. Use Hewlett Packard HP3457A digital multimeter.
2. Record temperature of building within +/- 5 degrees.
3. Press line button to turn line on.
4. Connect wires as shown in Figure below.
5. Push blue button (function key) once.
6. Push OHMF button.
7. Verify arrow in readout is above the 4WΩ (meaning a 4 wire resistance measurement).
8. Read resistance in ohms and record in traveler.

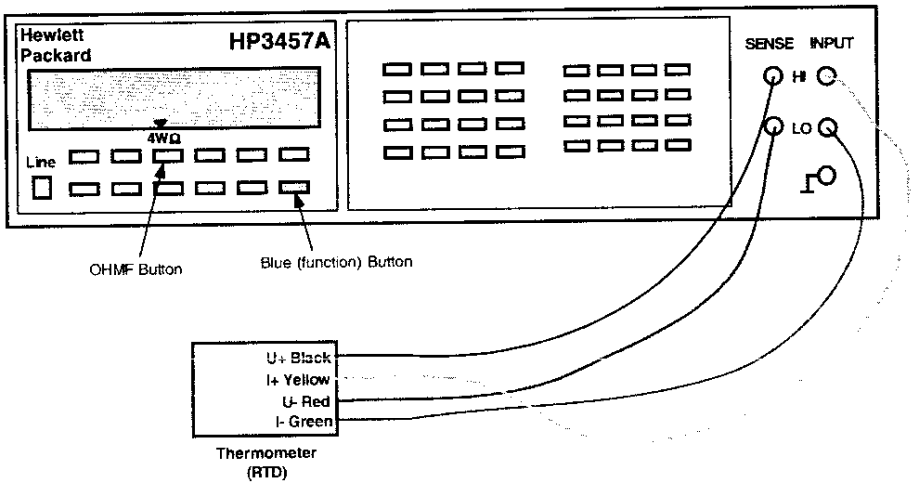


| RTD'S | | | | |
|---|---|---|---|---|
| **Building Temperature:** _____ | | | **Time of Test:** _____ | |
| **Serial No.** | **Location** | **Wire No.** | **Measured Ω** | **Mfr. Ω (expedition)** |
| | Q3 Inst. Bus Side | TT8313 | | |
| | Q3 Inst. Non-Bus Side | TT8323 | | |

| Cryogenic (Warm-up) Heaters | | |
|---|---|---|
| **Building Temperature:** _____ | | **Time of Test:** _____ |
| **Location** | **Wire No** | **Measured Ω** |
| Q3 Lead End (IP End) | **EH8313+** | Ω |
| | **EH8313-** | |
| Q3 Non-Lead End (Non-IP End) | **EH8323+** | Ω |
| | **EH8323-** | |

_____ Technician(s)

_____ Date

7.7 Hipot RTD's to 100V. Use Droege Serial No. 910 (FNAL Part No. 51330) or equivalent. (Max. Leakage < 0.1 μA)

STOP

**Have Crew Chief verify setup and sign below before continuing.**

Crew Chief _____ Date _____

| RTD'S | | |
|---|---|---|
| **Building Temperature:** _____ | | **Time of Test:** _____ |
| **Serial No.** | **Location** | **Hipot Leakage < 0.1 μA** |
| **TT8313** | Q3 Inst. Bus Side | |
| **TT8323** | Q3 Inst. Non-Bus Side | |

Hipot Cryogenic (Warm-up) Heaters to 300V. Use Droege Serial No. 910 (FNAL Part No. 51330) or equivalent. (Max. Leakage < 0.1 μA)

STOP

**Have Crew Chief verify setup and sign below before continuing.**

Crew Chief _____ Date _____

| Warm-up Heaters | | |
|---|---|---|
| **Building Temperature:** _____ | | **Time of Test:** _____ |
| **Location** | **Wire No** | **Hipot Leakage < 0.1 μA** |
| Q3 Lead End (IP End) | **EH8313+** | |
| | **EH8313-** | |
| Q3 Non-Lead End (Non-IP End) | **EH8323+** | |
| | **EH8323-** | |

Technician(s) _____ Date _____

7.8 Fill out the Cryogenic Thermometer Traveller that came with the RTD.
Fill out:

- Corrector Tag Name
- Date
- Resistance Measurement
- Temperature (i.e. 77° F)
- Firm/Laboratory (Fermi)
- Checked By (Print Last Name)

**Once all information has been filled out, make a copy of the Cryogenic Thermometer Traveller and place the copy in the designated binder.**

_____ _____
Technician(s) Date

_____ _____
Crew Chief Date

7.9 Mount the MCBXA Corrector Mounting Ring (ME-390037) to the MCBXA Corrector Magnet.

_____ _____
Technician(s) Date

7.10 Position and align the MCBXA Corrector Magnet.

_____ _____
Technician(s) Date

7.11 Tack weld the MCBXA Corrector Mounting Ring (ME-390037) to the Q3 Cold Mass Assembly (ME-390528) per Q3 Cold Mass Welded Assembly (ME-390529).

_____ _____
Weldor Date

7.12 Weld the MCBXA Corrector Mounting Ring (ME-390037) to the Q3 Cold Mass Assembly (ME-390108) Non-Lead End per Q3 Cold Mass Welded Assembly (ME-390529).

_____ _____
Weldor Date

7.13 Disassemble the MCBXA Corrector Magnet from the MCBXA Corrector Mounting Ring (ME-390037).

_____ _____
Technician(s) Date

7.14 Splice the Cold Mass voltage taps to the wire bundle.

_____ _____
Technician(s) Date

7.15 Verify the splices electrically:

**Test of Q3 Fixed Voltage Taps**

Apply 1A current between BUS #1 & BUS #2 on the Feed End (See Figure 7.15-A)

1. Clamp Bus #1 to Bus #2 on Return End.
2. Connect Current Source: BUS #1 to Positive and BUS #2 to Negative.

Use a 3457 or equivalent Digital Voltmeter and record measurement to four decimal places.

Use the Two-Wires Voltage Measurement Technique:

1. Connect Digital Voltmeter LO wire to BUS#2 (or Negative output of Power source).
2. HI wire of Digital Voltmeter will move through wires to measure V.

**DO NOT USE DC CURRENT LARGER THAN 2A.**

**DO NOT APPLY CURRENT THROUGH MAGNET LONGER THAN 30MIN.**

| |
|---|
| BUS #1 |
| BUS #2 |
| BUS #3 |
| BUS #4 |

**Power Bus Location Return End**

| | |
|---|---|
| BUS #1 | BUS #2 |
| BUS #3 | BUS #4 |

**Power Bus Location Feed End**

**Figure 7.15-A**

| HYPERTRONICS CONNECTOR | | FNAL Labels | Description | Wire Labels | Expected Voltage,V | Measured |
|---|---|---|---|---|---|---|
| Module | Pin | | | | | |
| NA | NA | VTa1Q3 | Q3 Lead Voltage Tap "a", primary | EE1113 | 7.0000 | |
| NA | NA | VTa2Q3 | Q3 Lead Voltage Tap "a", redundant | EE1123 | 7.0000 | |
| NA | NA | VTb1Q3 | Q3 lead Voltage Tap "b", primary | EE1313 | 0.0030 | |
| NA | NA | VTb2Q3 | Q3 Lead Voltage Tap "b" redundant | EE1323 | 0.0030 | |
| NA | NA | VTc1Q3 | Q3 Center Voltage Tap "c", primary | EE1213 | 3.5000 | |
| NA | NA | VTc2Q3 | Q3 Center Voltage Tap "c", redundant | EE1223 | 3.5000 | |

| Across BUS #1 and BUS #2: | |
|---|---|

Technician(s) _____ Date _____

## Protection Strip Heaters

Measure resistance across each heater using a handheld meter.

| Module | Pin | Breakout BOX Labels | Expected Resistance, OHM | Measured Resistance, OHM | FNAL Label | Description |
|---|---|---|---|---|---|---|
| NA | NA | YT1113+ | 30 | _____ | H1aQ3 | Q3 Protection (Strip) Heater, ("a" circuit) (CERN lead #1+) |
| NA | NA | YT1113- | | | H2aQ3 | Q3 Protection (Strip) Heater, ("a" circuit) (CERN lead #1-) |
| NA | NA | YT1123+ | 30 | _____ | H1bQ3 | Q3 Protection (Strip) Heater, ("b" circuit) (CERN lead #1+) |
| NA | NA | YT1123- | | | H2bQ3 | Q3 Protection (Strip) Heater, ("b" circuit) (CERN lead #1-) |

Technician(s) _____ Date _____

7.16 Attach wires using putty and install the Voltage Tap Splice Cover Block (MC-430146).

_____ _____
Technician(s) Date

7.17 Mount the MQSX Corrector Mounting Ring (MD-390209) to the MQSX Corrector Magnet.

_____ _____
Technician(s) Date

7.18 Position and align the MQSX Corrector Magnet per Q3 Cold Mass Welded Assembly (ME-390529).

_____ _____
Technician(s) Date

7.19 Tack weld the MQSX Corrector Mounting Ring (MD-309209) to the Q3 Cold Mass Assembly (ME-390528) per Q3 Cold Mass Welded Assembly (ME-390529).

_____ _____
Weldor Date

7.20 Weld the MQSX Corrector Mounting Ring (MD-309209) to the Q3 Cold Mass Assembly (ME-390528) Lead End per Q3 Cold Mass Welded Assembly (ME-390529).

_____ _____
Weldor Date

7.21 Disassemble the MQSX Corrector Magnet from the MQSX Corrector Mounting Ring (MD-309209).

_____ _____
Technician(s) Date

8.0 Installation of MQSX Corrector Coil

8.1 Move the MQSX Corrector Magnet up against the Mounting Ring on the Q3 Cold Mass and bolt the MQSX Corrector Magnet to the Q3 Cold Mass using the Silver Plated Mounting Screw and torque bolts to 500 in.-lbs. Shim between the corrector and flange as necessary.

Technician(s) _____ Date _____

8.2 Verify alignment of MQSX Corrector Magnet as per Q3 Module Assembly (ME-369900).

Crew Chief _____ Date _____

Responsible Authority/Physicist _____ Date _____

8.3 Tack weld bolts and washers for mounting MQSX Corrector Magnet into place per Q3 Cold Mass Welded Assembly (ME-390529).

Weldor(s) _____ Date _____

8.4 Solder Corrector Wires per Q3 Module Assembly (ME-369900) and as shown in Figure 8.5-A.

Technician(s) _____ Date _____

8.5 Install voltage taps on MQSX corrector leads. One tap is to be soldered to the "A" Lead of each corrector element. Wire label is shown below.

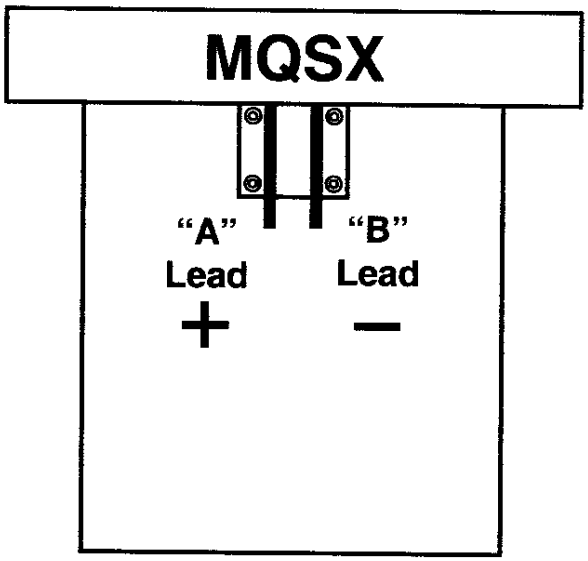


**Overhead View**

| Corrector Assembly | Corrector Element | Label |
|---|---|---|
| MQSX | MQSX | A+ lead Q3A2 (skew quadrupole) voltage tap EE8223 (VTA2) |

Technician(s) _____ Date _____

9.0 Installation of MCBXA

9.1 Move the MCBXA Corrector Magnet up against the Mounting Ring on the Q3 Magnet, and bolt the MCBXA Corrector Magnet to the Q3 Cold Mass using the 3" Silver Plated Mounting Screw (MA-390247) and torque bolts to 500 in-lbs. per Note 4 of Q3 Cold Mass Welded Assembly (ME-390529). Shim between the Corrector and Flange as necessary.

Technician(s) _____ Date _____

9.2 Verify Alignment of MCBXA Corrector Magnet as per Q3 Cold Mass Welded Assembly (ME-390529).

Technician(s) _____ Date _____

Responsible Authority/Physicist _____ Date _____

9.3 Tack weld bolts and washers for mounting Corrector into place per Q3 Cold Mass Welded Assembly (ME-390529).

Weldor(s) _____ Date _____

9.4 Route MCBXA Corrector Coil Wires as shown in Figure 9.4-A below and per Q3 Cold Mass Welded Assembly (ME-390529).

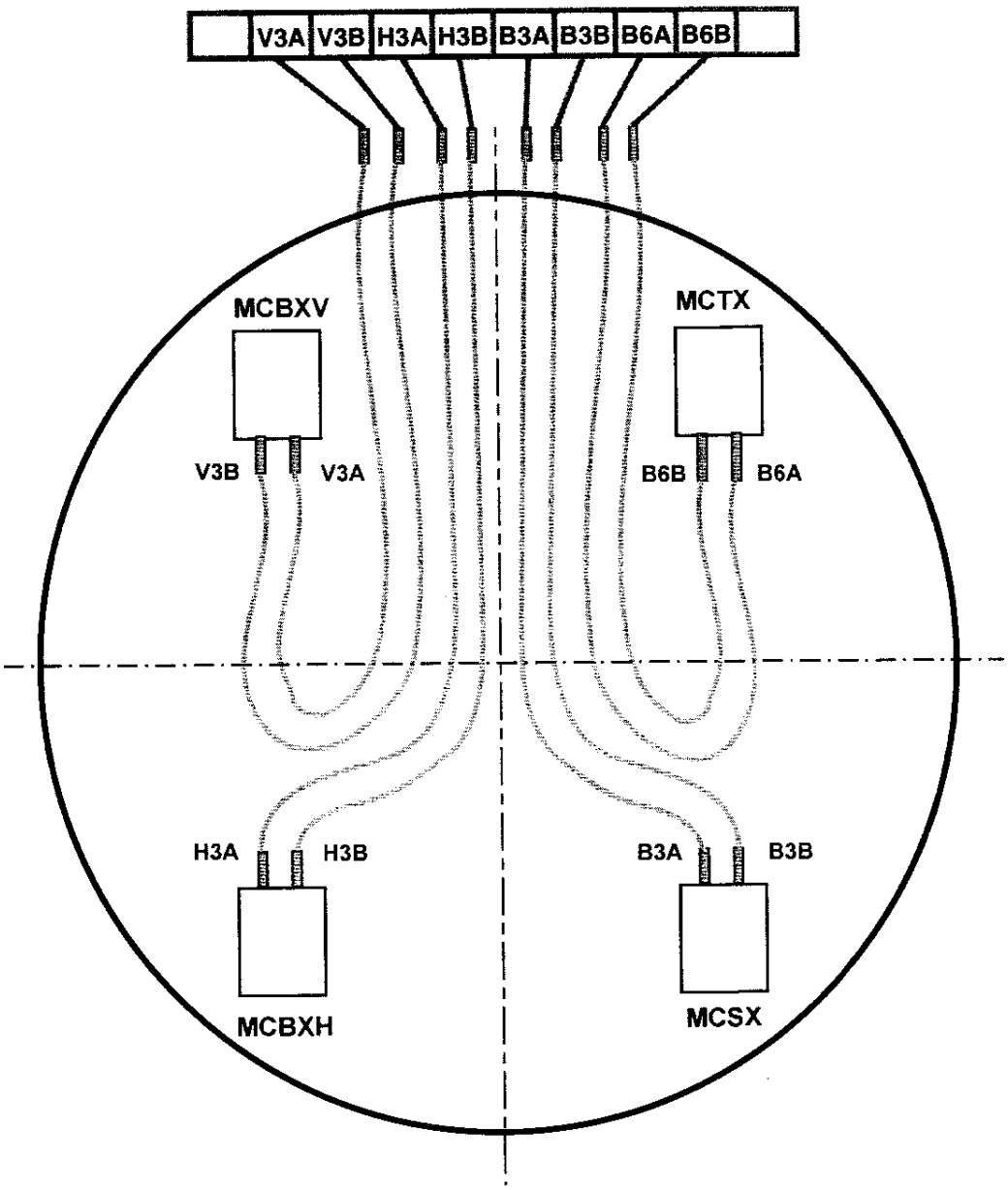


End View of MCBXA for Q3
(in "up" position)

Looking into end of correction coil from DFBX to Q3

**Figure 9.4-A**

Technician(s) _____ Date _____

9.5 Solder Corrector Wires per Q3 Module Assembly (ME-369900) and as shown in Figure 9.4-A.

Technician(s) Date

9.6 Install voltage taps on MCBXA corrector leads. One tap is to be soldered to the "A" Lead of each corrector element. Wire labels are shown below.

| Corrector Assembly | Corrector Element | Label |
|---|---|---|
| MCBXA | MCBXH | A+ lead Q3H3 (skew dipole) voltage tap EE8123 (VTH3) |
| | MCBXV | A+ lead Q3V3 (normal dipole) voltage tap EE8113 (VTV3) |
| | MCSX | A+ lead Q3B3 (normal sextupole) voltage tap EE8313 (VTB3) |
| | MCTX | A+ lead Q3B6 (normal dodecapole) voltage tap EE8613 (VTB6) |

Technician(s) Date

10.0 Installation of MCSOX

10.1 Mount the MCSOX Corrector Magnet to the MCSOX Corrector Mounting Ring (ME-390664).

Technician(s) _____ Date _____

10.2 Slide the MCSOX Corrector Magnet & MCSOX Corrector Mounting Ring (ME-390664) up to the MCBXA Corrector Magnet.

Technician(s) _____ Date _____

10.3 Position the MCSOX Corrector Magnet radial (Scribe Line at 0°)

Technician(s) _____ Date _____

10.4 Position the MCSOX Corrector Magnet longitudinally. (The gap between the MCBXA Magnet and the Mounting Ring should be approximately 15mm.)

Technician(s) _____ Date _____

10.5 Tack weld MCSOX Corrector Mounting Ring (ME-390664) as per Q3 Cold Mass Welded Assembly (ME-390529).

Weldor(s) _____ Date _____

10.6 Weld the MCSOX Corrector Mounting Ring (ME-390664) as per Q3 Cold Mass Welded Assembly (ME-390529).

Weldor(s) _____ Date _____

10.7 Wire the MCSOX Corrector Magnet.

Technician(s) Date

10.8 Verify alignment of the MCSOX Corrector Magnet.

Technician(s) Date

Responsible Authority/Physicist Date

10.9 Tack weld the MCSOX Corrector Magnet hardware as per Q3 Cold Mass Welded Assembly (ME-390529).

Weldor(s) Date

10.10 Solder Corrector Wires per Q3 Module Assembly (ME-369900).

Technician(s) Date

10.11 Install voltage taps on MCSOX corrector leads. One tap is to be soldered to the "A" Lead of each corrector element. Wire labels are shown below.

| Corrector Assembly | Corrector Element | Label |
|---|---|---|
| MCSOX | MCOSX | A+ lead Q3A4 (skew octupole) voltage tap EE8423 (VTA4) |
| | MCOX | A+ lead Q3B4 (normal octupole) voltage tap EE8413 (VTB4) |
| | MCSSX | A+ lead Q3A3 (skew sextupole) voltage tap EE8323 (VTA3) |

Technician(s) Date

11.0 Dome Setup

11.1 Attach IP End Dome (MD-390221) (Q3) to the End Dome Positioning Fixture (MD-369776).

Technician(s) _____ Date _____

11.2 Align IP End Dome (MD-390221) as shown in Q3 Cold Mass Welded Assembly (ME-390529).

Technician(s) _____ Date _____

11.3 Level the IP End Dome (MD-390221) using the Ball Socket (MD-369777) and the Mini Level.

Technician(s) _____ Date _____

11.4 Mark the IP End Dome (MD-390221) and the End Plate with a Horizontal Witness Line. This Step will be used in Step 13.3 to reposition the Domes prior to Welding.

Technician(s) _____ Date _____

11.5 Remove the IP End Dome (MD-390221) from the Tooling.

Technician(s) _____ Date _____

11.6 Attach Non-IP End Dome (MD- 390668) (Q3) to the End Dome Positioning Fixture (MD-369776).

Technician(s) _____ Date _____

11.7 Align Non-IP End Dome (MD- 390668) as shown in Q3 Cold Mass Welded Assembly (ME-390529).

Technician(s) _____ Date _____

11.8 Level the Non-IP End Dome (MD- 390668) using the Ball Socket (MD-369777) and the Mini Level.

Technician(s) _____ Date _____

11.9 Feed the Electrical wires/bus through the proper ports as the Non-IP End Dome (MD- 390668) is brought into position against the End Plate.

Technician(s) _____ Date _____

11.10 Mark the Non-IP End Dome (MD- 390668) and the End Plate with a Horizontal Witness Line. This Step will be used in Step 18.6 to reposition the Extension Tubes prior to Welding.

Technician(s) _____ Date _____

11.11 Remove the Non-IP End Dome (MD- 390668) from the Tooling.

_____ _____
Technician(s) Date

11.12 Perform preliminary reference measurements before moving the Cold Mass to an Assembly Table.

Check one (Upper / Lower slash) and then record the reference measurement and Mini-level No.

**Upper Slash** ☐

**Lower Slash** ☐

**Take measurement while looking from Non-Lead End toward the Lead End.**

**Reference Measurement:** _____

**Mini-level No.** _____

_____ _____
Technician(s) Date

_____ _____
Responsible Authority/Physicist Date

11.13 Move the Cold Mass to an Assembly Table.

_____ _____
Technician(s) Date

12.0 Splicing the Power Leads

12.1 At the IP End, set up the Power Leads for splicing as shown in the Q3 Module Assembly Drawing (ME-369900).

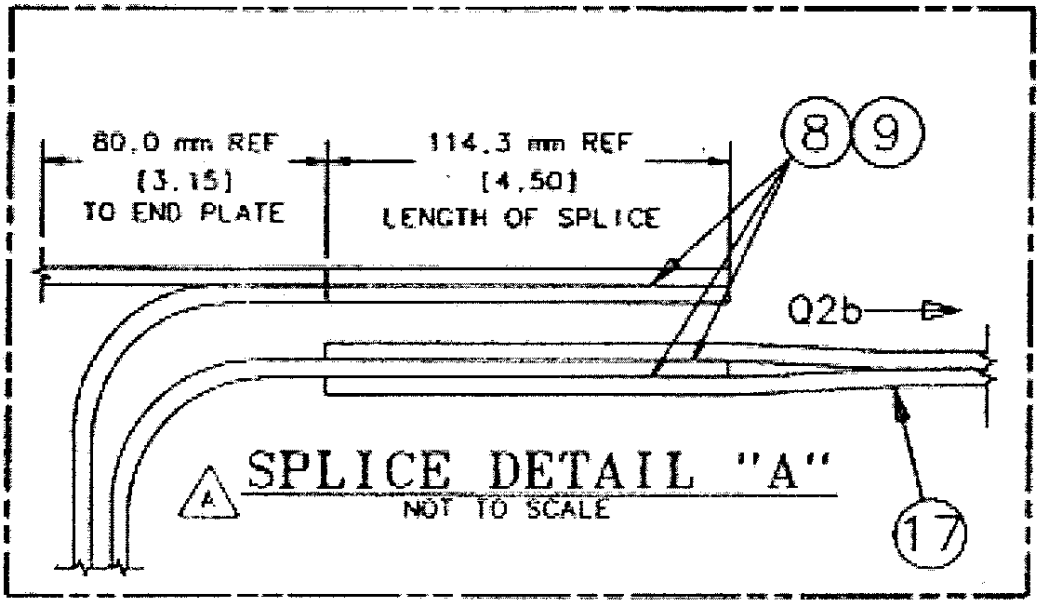


**Figure 12.1-A**
**(ME-369900 - Rev. A, Sheet 3 of 5)**

Technician(s) _____ Date _____

12.2 Construct / Obtain Expansion Loop Tail per Q3 Module Assembly Insulated Expansion Loop Tail (MB-430145).

Technician(s) _____ Date _____

12.3 Solder the Lower Lead to the expansion Loop Tail from Step 8.2 as per Q3 Module Assembly Drawing (ME-369900).

Technician(s) _____ Date _____

12.4 Solder the Upper Magnet Lead (Terminal "A", Quadrant 4) to the Lower 8kA Bus as per Q3 Module Assembly Drawing (ME-369900).

Technician(s) _____ Date _____

12.5 Insulate each splice with 2/3 overlap, .002 x 3/8 wide Kapton, (MA-292722).

Technician(s) _____ Date _____

12.6 Insert a piece of .005 Kapton between splices.

Technician(s) _____ Date _____

12.7 Put splices together and insulate splice area with ¾ overlap, .002 x 3/8 wide Kapton (MA-292722).

Technician(s) _____ Date _____

12.8 Attach Q3 Bus Splice Clamp Assembly (MD-430031) to Q3 Lead as per Q3 Module Assembly (ME-369900).

Technician(s) _____ Date _____

12.9 Attach IP (Lead) End Buss Crossover Block Assembly (MD-430095) as per Q3 Module Assembly (ME-369900).

Technician(s) _____ Date _____

12.10 Attach Cable Clamp Assemblies as per Q3 Module Assembly (ME-369900).

Technician(s) _____ Date _____

12.11 Solder MQSX Corrector Wires.

Technician(s) _____ Date _____

12.12 Route Cable and Corrector Leads on IP (Lead) End as shown below and per Q3 Module Assembly (ME-369900).

## Lead Bus Orientation through Q3

R. Bossert 3-29-04

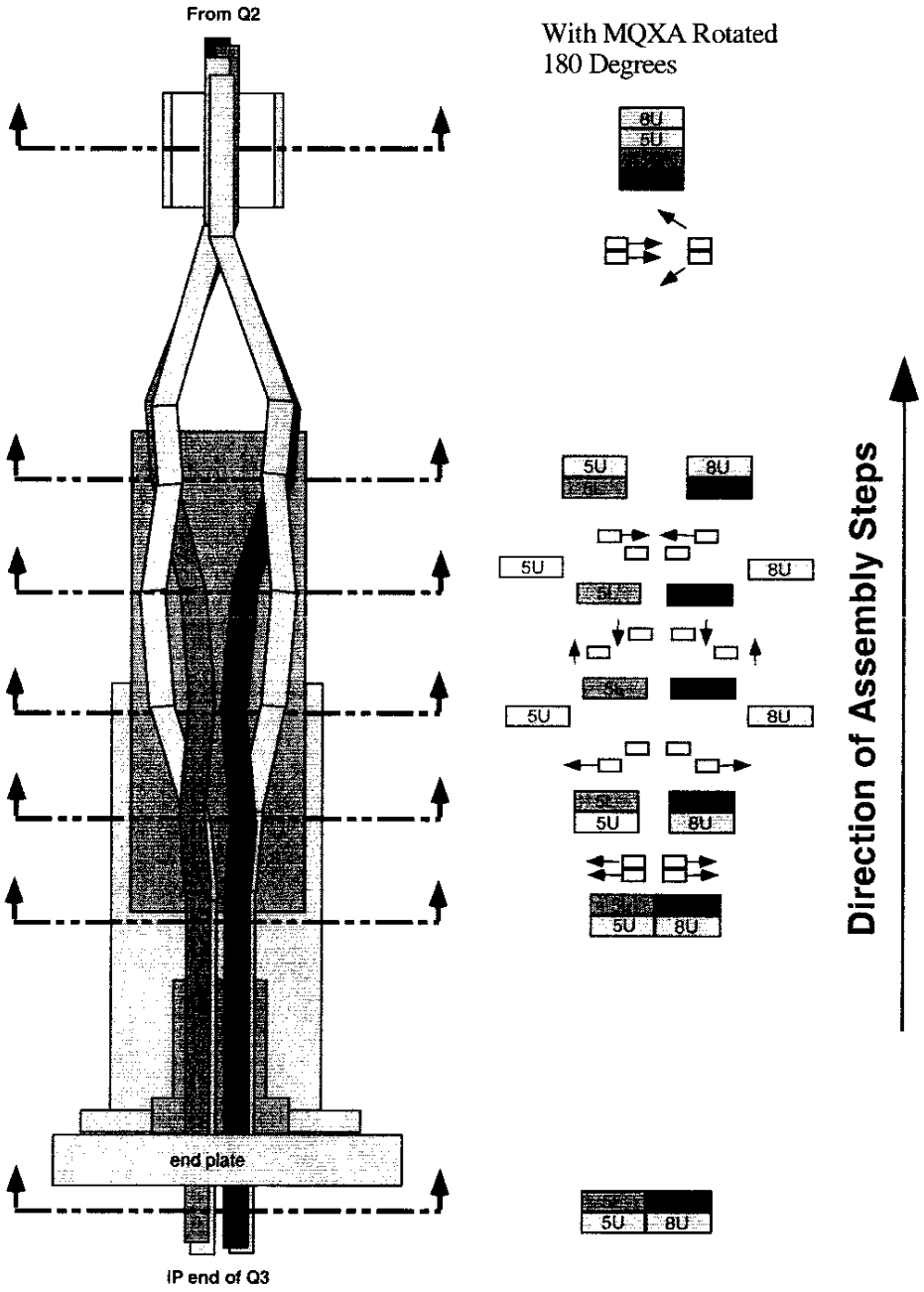


**Figure 12.12-A**

Technician(s) _____ Date _____

12.13 At the IP End, attach Spider Assembly (MD-430072) as per Q3 Module Assembly (ME-369900).

_____ _____
Technician(s) Date

12.14 Attach Non-IP End Bus Crossover Block Assembly (MD-430081) as per Q3 Module Assembly (ME-369900).

_____ _____
Technician(s) Date

13.0 Configure MCSOX Corrector Coil Wires

13.1 Attach the MCSOX Splice Plate Mounting Ring (ME-430129), the MCSOX Corrector Splice Face Plate (ME-430130), and the MCSOX Splice Plate Mounting Bars (ME-430128) as per Q3 Module Assembly (ME-369900).

_____ _____
Technician(s) Date

13.2 Route wires as shown in figure below and per Q3 Module Assembly (ME-369900).

_____ _____
Technician(s) Date

13.3 Solder Wires per Q3 Module Assembly (ME-369900) and Figure 13.0. (Next Page)

_____ _____
Technician(s) Date

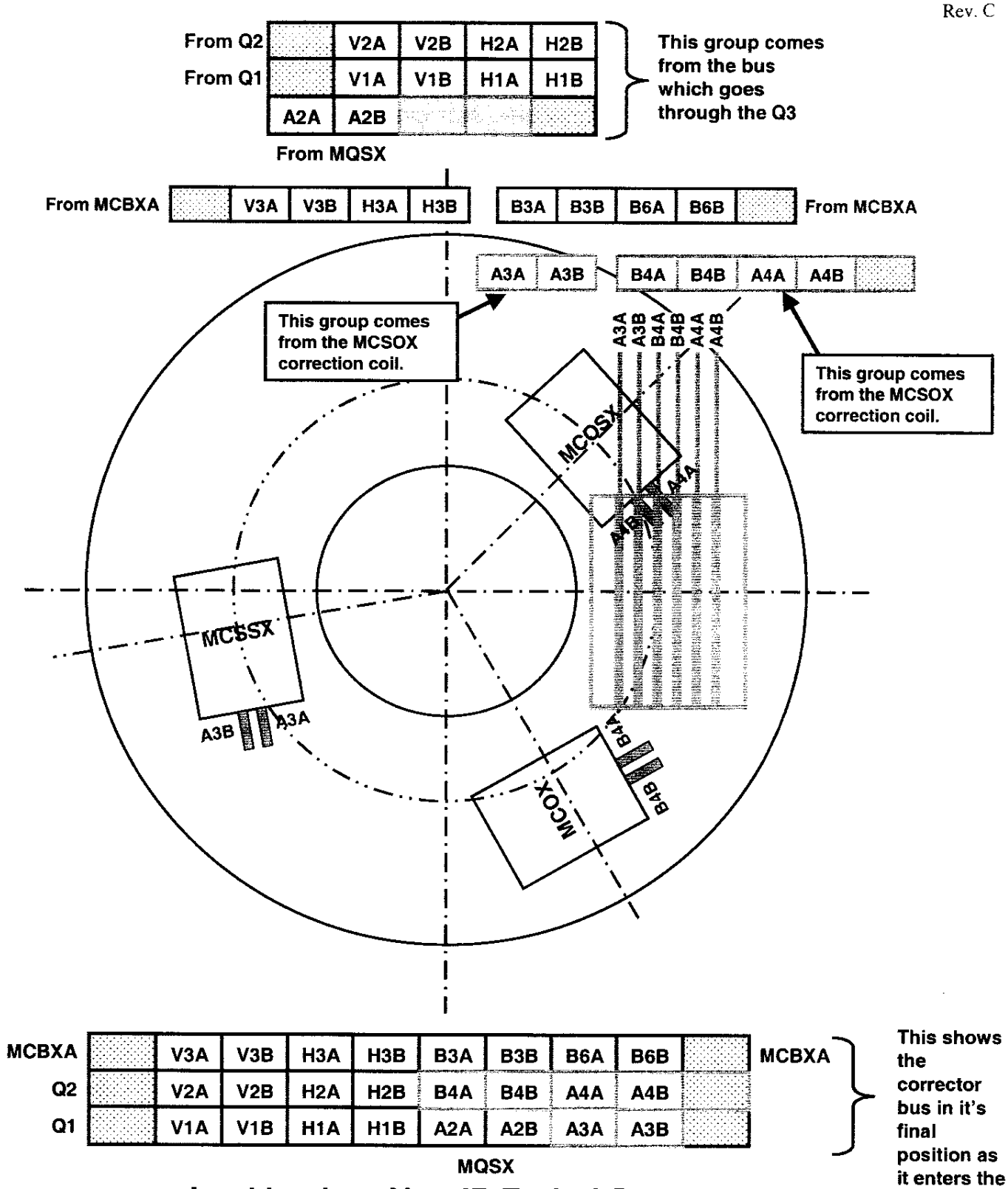


## Looking into Non-IP End of Q3

Looking into end of correction coil from DFBX into Q3

# Figure 13.0-A

14.0 Mount MCSOX Bus and Expansion Loop Hardware

14.1 Mount the Side Cable Clamp Assembly (ME-430103) as per Q3 Module Assembly (ME-369900).

_____ _____
Technician(s) Date

14.2 Mount the Non-IP (Non-Lead End) Corrector Bus Bundle Bracket (ME-430134) as per Q3 Module Assembly (ME-369900).

_____ _____
Technician(s) Date

15.0 Assemble Bus and Expansion Loop on Non-IP (Non-Lead) End

15.1 Route Non-IP End cables into crossover assembly on Non-IP End as shown in figure 15.1-A.

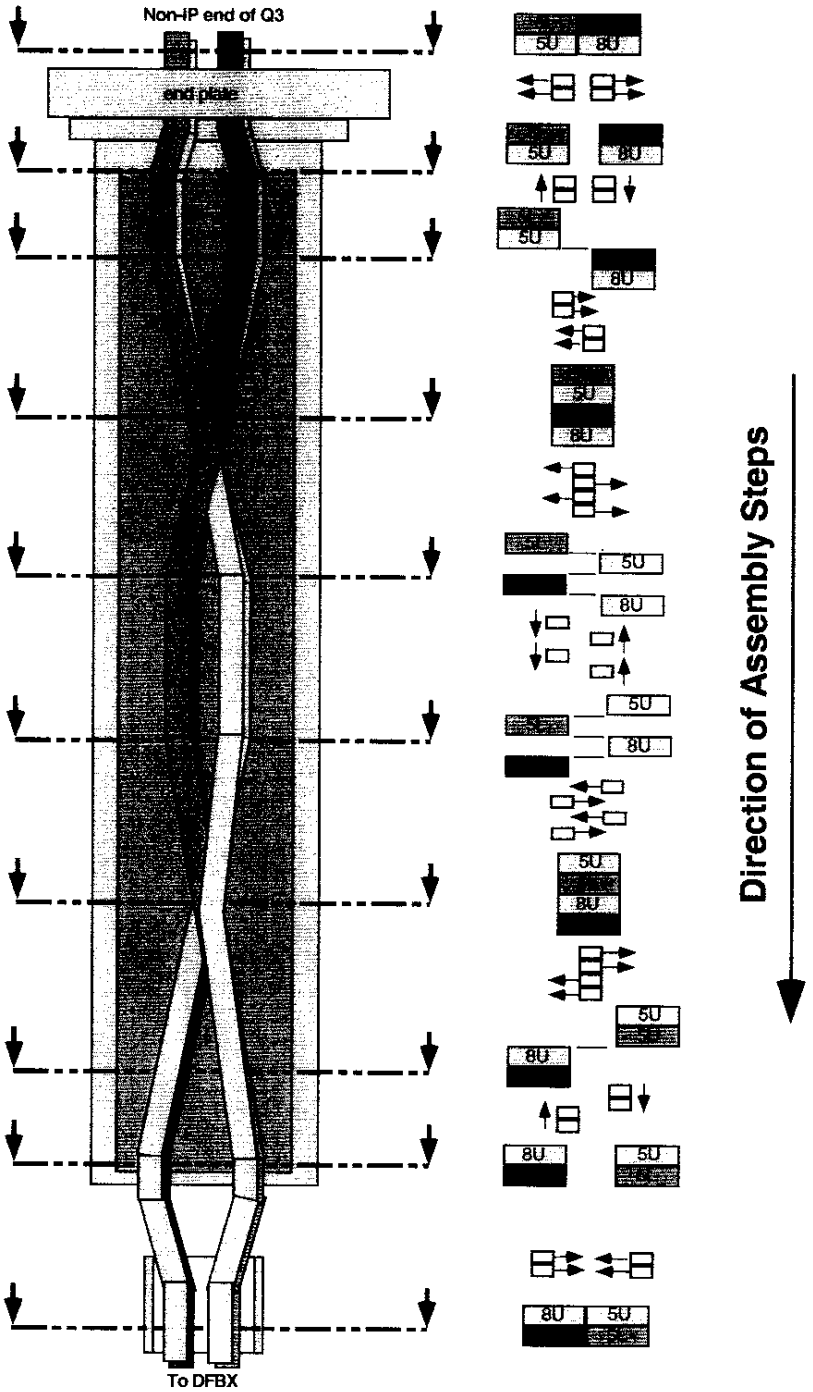


**Figure 15.1-A**

Technician(s) _____ Date _____

15.2 Configure Bus Expansion Loop as per Q3 Module Assembly (ME-369900).

_____ _____
Technician(s) Date

15.3 At the Non-IP End, attach Spider Assembly (MB-430096) as per Q3 Module Assembly (ME-369900).

_____ _____
Technician(s) Date

16.0 Electrical Inspection

16.1 Perform an electrical inspection on each of the Individual Quadrants and the Cold Mass. Refer to the Valhalla and Leader Free Standing Coil Measurement Procedure (ES-292306).

**To measure the Resistance of a Q3 Cold Mass:**

1. Use Valhalla Scientific 4300B digital micro-ohmmeter.
2. Set Test Current to 0.1 amp.
3. Set Scale to 2V full scale.
4. Turn temperature compensation on.
5. Turn test current off.
6. Connect $I_{HI}$ to "A" Lead as shown in figure 16.1-A.
7. Connect $I_{LO}$ to "B" Lead as shown in figure 16.1-A.
8. Turn test current on.
9. Connect $V_{HI}$ and $V_{LO}$ to voltage taps as shown in resistance table.
10. To measure Total with leads, connect $V_{HI}$ to "A" Lead and $V_{LO}$ to "B" Lead.
11. At the IP End, jumper the 8Ka leads as shown in Figure 16.1-A.
12. Read resistance and record in traveler.

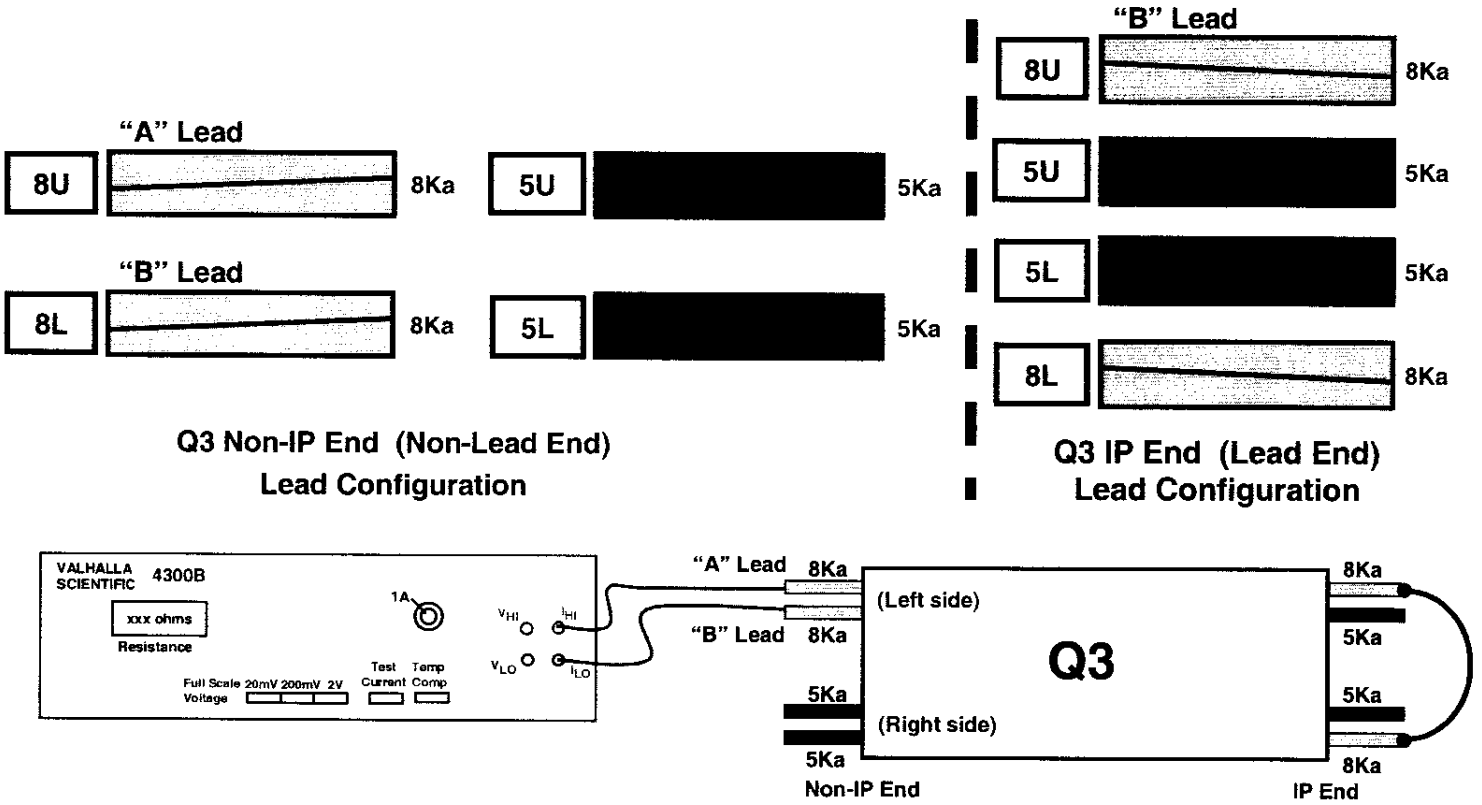


# Figure 16.1-A

| (Q3) Resistance | | | | Nominal 3.35 to 3.45 Ω |
|---|---|---|---|---|
| | | | | Total Resistance |
| Connect | Fermi | CERN | KEK | |
| $V_{HI}$ | VTa1Q3 | EE1113 | a1 | |
| $V_{LO}$ | VTc1Q3 | EE1213 | c1 | Ω |
| $V_{HI}$ | VTc1Q3 | EE1213 | c1 | |
| $V_{LO}$ | VTb1Q3 | EE1313 | b1 | Ω |
| $V_{HI}$ | VTa1Q3 | EE1113 | a1 | |
| $V_{LO}$ | VTb1Q3 | EE1313 | b1 | Ω |

| | | Total Resistance with Leads |
|---|---|---|
| | | Nominal 6.75 to 6.85 Ω |
| $V_{HI}$ | Q4 Power Lead | |
| $V_{LO}$ | Q3 Power Lead | Ω |

Technician(s) _____ Date _____

Check resistance of Redundant Voltage Taps.

| Q3 Redundant Voltage Taps | | | | Nominal 3.35 to 3.45 Ω |
|---|---|---|---|---|
| Connect | Fermi | CERN | KEK | Resistance |
| $V_{HI}$ | VTa2Q3 | EE1123 | a2 | |
| $V_{LO}$ | VTc2Q3 | EE1223 | c2 | Ω |
| $V_{HI}$ | VTc2Q3 | EE1223 | c2 | |
| $V_{LO}$ | VTb2Q3 | EE1323 | b2 | Ω |

Technician(s) _____ Date _____

**To measure Ls and Q of a Q3 Cold Mass:**

1. Use Agilent 4263B LCR Meter.
2. Turn power on by pushing line button. Wait 30 seconds until display screen is lit.
3. Recall program #1. To do this, push recall (Rcl), then push #1, then push Enter.
4. Push Auto/Hold button to release hold.
5. Verify that the frequency displayed in the upper right corner of the display screen is 1000 Hz and the level recorded in the lower right corner of the display screen is 1V or 1000 mV.
6. Connect $H_{cur}$ to "A" power lead as shown in figure 16.1-B.
7. Connect $L_{cur}$ to "B" power lead as shown in figure 16.1-B.
8. Connect $H_{pot}$ and $L_{pot}$ buttons to voltage taps as shown below.
9. Read Ls and Q from display and record in table.

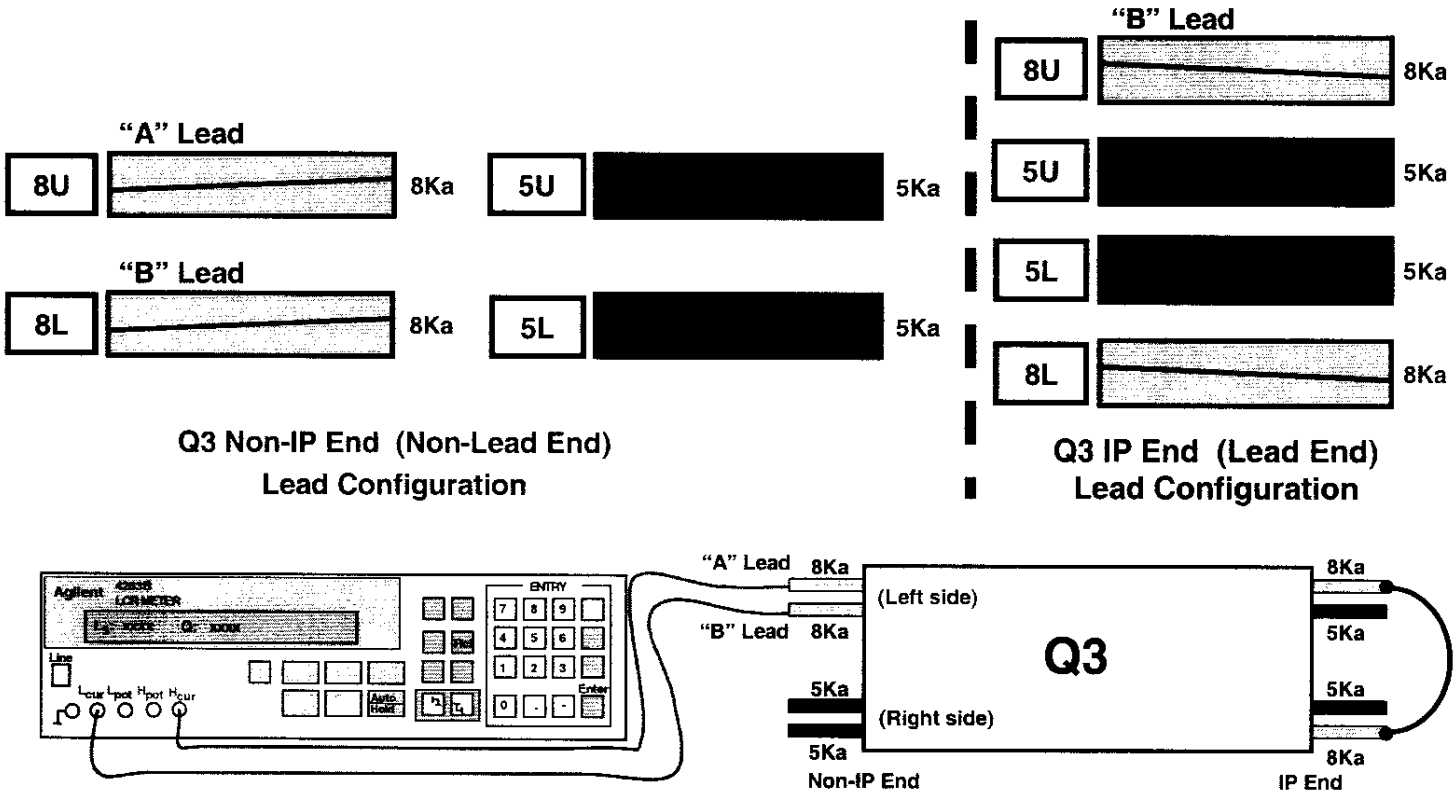


# Figure 16.1-B

| (Q3) Inductance | | | | Nominal 15 to 16 mH |
|---|---|---|---|---|
| | | | | Total Inductance |
| Connect | Fermi | CERN | KEK | |
| $H_{POT}$ | VTa1Q3 | EE1113 | a1 | |
| $L_{POT}$ | VTc1Q3 | EE1213 | c1 | mH |
| $H_{POT}$ | VTc1Q3 | EE1213 | c1 | |
| $L_{POT}$ | VTb1Q3 | EE1313 | b1 | mH |

| | | | | Nominal 30 to 32 mH |
|---|---|---|---|---|
| | | | | Total Inductance |
| $H_{POT}$ | VTa1Q3 | EE1113 | a1 | |
| $L_{POT}$ | VTb1Q3 | EE1313 | b1 | mH |

| (Q3) Q-Factor | | | | Nominal 1.0 to 1.2 |
|---|---|---|---|---|
| | | | | Total Q |
| Connect | Fermi | CERN | KEK | |
| $H_{POT}$ | VTa1Q3 | EE1113 | a1 | |
| $L_{POT}$ | VTc1Q3 | EE1213 | c1 | |
| $H_{POT}$ | VTc1Q3 | EE1213 | c1 | |
| $L_{POT}$ | VTb1Q3 | EE1313 | b1 | |

| | | | | Nominal 1.0 to 1.2 |
|---|---|---|---|---|
| | | | | Total Inductance |
| $H_{POT}$ | VTa1Q3 | EE1113 | a1 | |
| $L_{POT}$ | VTb1Q3 | EE1313 | b1 | |

Technician(s) _____ Date _____

**To measure the resistance of a Thermometer (RTD):**

1. Use Hewlett Packard HP3457A digital multimeter.
2. Record temperature of building within +/- 5 degrees.
3. Press line button to turn line on.
4. Connect wires as shown in Figure below.
   U+ (Black) to Sense HI
   I+ (Yellow) to Input HI
   U- (Red) to Sense LO
   I- (Green) to Input LO
5. Push blue button (function key) once.
6. Push OHMF button.
7. Verify arrow in readout is above the 4WΩ (meaning a 4 wire resistance measurement).
8. Read resistance in ohms and record in traveler.

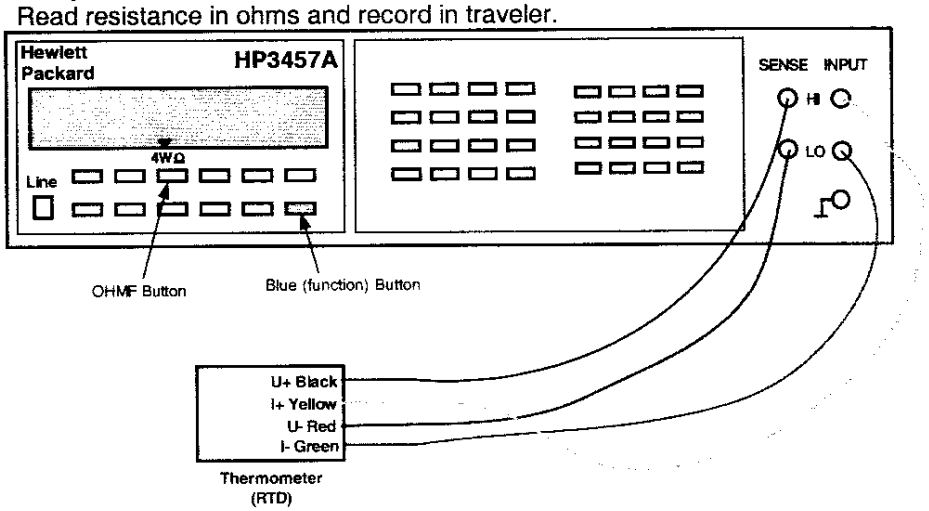


**To measure the resistance of a Cryogenic (Warm-up) Heater**

1. Use Hewlett Packard HP3457A digital multimeter.
2. Record temperature of building within +/- 5 degrees.
3. Press line button to turn line on.
4. Connect wires as shown in Figure below.
5. Push blue button (function key) once.
6. Push OHMF button.
7. Verify arrow in readout is above the 4WΩ (meaning a 4 wire resistance measurement).
   **Note: Although this is technically a 4 wire measurement, it is effectively a 2 wire measurement, since there are only 2 wires connected to each heater.**
8. Read resistance in ohms and record in traveler.

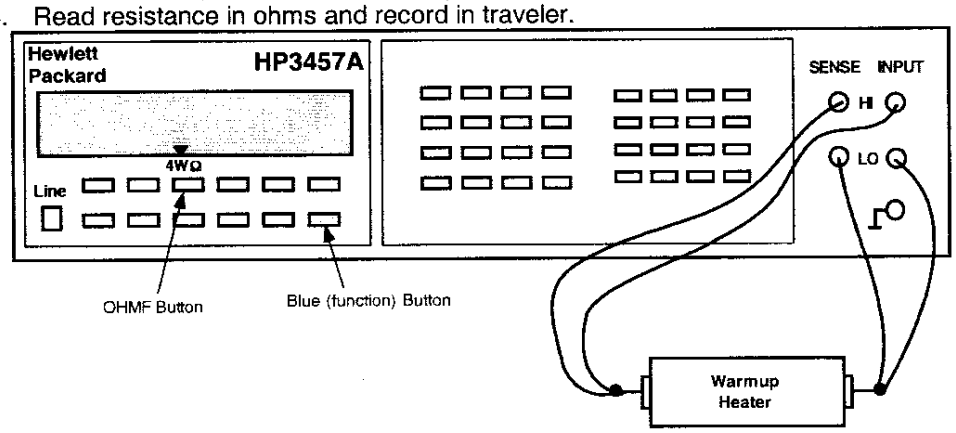

| Q3 - RTD's and Cryogenic (warm-up) Heaters | | | | |
|---|---|---|---|---|
| Temperature of Building (± 5°): _____ | | | | |
| **Component** | **Fermi** | **CERN** | **Range** | **Resistance** |
| Q3 RTD, primary | TaQ3 | TT8313 | **60 to 70 Ω** | Ω |
| Q3 RTD, redundant | TbQ3 | TT8323 | **60 to 70 Ω** | Ω |
| Q3 Cryogenic (warm-up) Heater (LE) - wire at top (CERN #1 I+) | W1aQ3 | EH8313+ | **16 to 18.5 Ω** | Ω |
| Q3 Cryogenic (warm-up) Heater (LE) - wire at bottom (CERN #1 I-) | W2aQ3 | EH8313- | | |
| Q3 Cryogenic (warm-up) Heater (Non-LE) - wire at top (CERN #2 I+) | W1bQ3 | EH8323+ | **16 to 18.5 Ω** | Ω |
| Q3 Cryogenic (warm-up) Heater (Non-LE) - wire at bottom (CERN #2 I-) | W2bQ3 | EH8323- | | |

Technician(s) _____ Date _____

Using the Hewlett Packard HP3457A digital multimeter, measure the Protection (Strip) Heater Resistance for Q3.

| Q3 Protection (Strip) Heater Resistance | | | | | |
|---|---|---|---|---|---|
| **Fermi** | **CERN** | **KEK** | **Description** | **Limit** | **Resistance** |
| **H1aQ3** | **YT1113+** | **HA1** | **Circuit A** | **28 to 32 Ω** | Ω |
| **H2aQ3** | **YT1113-** | **HA2** | | | |
| **H1bQ3** | **YT1123+** | **HB1** | **Circuit B** | **28 to 32 Ω** | Ω |
| **H2bQ3** | **YT1123-** | **HB2** | | | |

Technician(s) _____ Date _____

16.2 Using the Valhalla 4300B, connect 10mA applied voltage thru the corrector Power Leads. Measure Resistance and record in the table below. Record Initial resistance of Corrector Element and record below.

**Corrector Bus Leads**

| | | | | | | | | | |
|---|---|---|---|---|---|---|---|---|---|
| | V3A | V3B | H3A | H3B | B3A | B3B | B6A | B6B | |
| | V2A | V2B | H2A | H2B | B4A | B4B | A4A | A4B | |
| | V1A | V1B | H1A | H1B | A2A | A2B | A3A | A3B | |

**(View Looking from DFBX into Q3)**

| Corrector Assembly | Corrector Element | Readout Labels | | Power Labels | | Resistance | Initial Resistance |
|---|---|---|---|---|---|---|---|
| | | | | $I_{HI}$ | $I_{LO}$ | | |
| MQSX | MQSX | A2A | EE8223 | A2A | A2B | | MQSX |
| | | EE8223 | A2B | | | | |
| | | A2A | A2B | | | | |
| MCBXA | MCBXV | V3A | EE8113 | V3A | V3B | | MCBXV |
| | | EE8113 | V3B | | | | |
| | | V3A | V3B | | | | |
| | MCBXH | H3A | EE8123 | H3A | H3B | | MCBXH |
| | | EE8123 | H3B | | | | |
| | | H3A | H3B | | | | |
| | MCTX | B6A | EE8613 | B6A | B6B | | MCTX |
| | | EE8613 | B6B | | | | |
| | | B6A | B6B | | | | |
| | MCSX | B3A | EE8313 | B3A | B3B | | MCSX |
| | | EE8313 | B3B | | | | |
| | | B3A | B3B | | | | |
| MCSOX | MCOSX | A4A | EE8423 | A4A | A4B | | MCOSX |
| | | EE8423 | A4B | | | | |
| | | A4A | A4B | | | | |
| | MCOX | B4A | EE8413 | B4A | B4B | | MCOX |
| | | EE8413 | B4B | | | | |
| | | B4A | B4B | | | | |
| | MCSSX | A3A | EE8323 | A3A | A3B | | MCSSX |
| | | EE8323 | A3B | | | | |
| | | A3A | A3B | | | | |

Technician(s) _____ Date _____

16.3 Attach Backing Splines as per Q3 Module Assembly (ME-369900).

_____ _____
Technician(s) Date

16.4 At the IP End (Lead End) wrap the Springboard Assemblies in Kapton and then wrap with Kevlar String (MA-369912) every ½ - ¾" over Kapton as per Q3 Module Assembly (ME-369900).

_____ _____
Technician(s) Date

16.5 At the Non-IP End (Non-Lead End) wrap the Springboard Assemblies in Kapton and then wrap with Kevlar String (MA-369912) every ½ - ¾" over Kapton as per Q3 Module Assembly (ME-369900).

_____ _____
Technician(s) Date

17.0 Beam Tube Insertion

17.1 Inspect the Beam Tube (MC-369522) for damage. Clean Beam Tube using lint free Heavy Duty Wipers (Fermi stock 1660-0150) and Isopropyl Alcohol (Fermi stock 1920-0300) as per Insulated Beam Tube Assembly for Q3 (MD-369838).

Technician(s) _____ Date _____

17.2 Using Insertion Tooling, insert the Beam Tube (MC-369522) into the Magnet Assembly as per Beam Tube Insertion Tooling (MD-369789).

Technician(s) _____ Date _____

17.3 Place a mark 45mm from the Kapton insulation on Non-IP End of the Beam Tube.

Technician(s) _____ Date _____

17.4 Verify that the placement of the mark in Step 17.4 is correct.

Crew Chief _____ Date _____

17.5 Using the Wachs Cutter, cut the Non-IP End of the Beam Tube at the mark.

Technician(s) _____ Date _____

17.6 Measure the inside Beam Tube length and record this measurement below.

| Step | Description | Measurement |
|---|---|---|
| 17.7.1 | **Beam Tube Length** | |
| | **Subtract 8650mm (±2mm)** | **- 8650mm** |
| 17.7.2 | **(Length to be cut from IP End)** | = |

Technician(s) _____ Date _____

17.7 Using the number recorded in Step 17.7.2, measure and place a mark at the IP End of the Beam Tube.

Technician(s) Date

17.8 Verify that the placement of the mark in Step 17.8 is correct.

STOP

Crew Chief Date

17.9 Using the Wachs Cutter, cut the IP End of the Beam Tube at the mark.

Technician(s) Date

17.10 Measure and verify Beam Tube length is 8650mm (±2mm). Record Actual Beam Tube Length below.

| **Actual Beam Tube Length** | |
|---|---|

Technician(s) Date

STOP

Responsible Authority/Physicist Date

17.11 Hipot the Beam Tube to coil, heaters and ground. (5kV) (Max. Leakage < 0.5μA)

STOP

**Have Crew Chief verify setup and sign below before continuing.**

Crew Chief Date

| Hipot | Leakage or Failure Voltage | Pass | Fail |
|---|---|---|---|
| Beam Tube to coil, heaters and ground | | | |

Technician(s) Date

STOP

Responsible Authority/Physicist Date

18.0 Dome Installation

18.1 Tack weld the corrector mounting hardware in place as per Q3 Cold Mass Welded Assembly (ME-390529).

Weldor(s) _____ Date _____

18.2 Mount and adjust the Shipping restraint screws.

**Note(s):**
**Weld to corrector if necessary.**

Technician(s) _____ Date _____

18.3 Reposition the IP End Dome as shown in Q3 Cold Mass Welded Assembly (ME-390529) using the Horizontal Witness Line from step 11.4.

Technician(s) _____ Date _____

18.4 Tack weld the IP End Dome in place at approximately 6-8 places around the Dome per Q3 Cold Mass Welded Assembly (ME-390529).

Weldor(s) _____ Date _____

18.5 Ensure Spider Assembly (MB-430096) is installed properly as per Q3 Module Assembly (ME-369900).

Responsible Authority _____ Date _____

18.6 Weld the IP End Dome, skip weld around to minimize distortion per Q3 Cold Mass Welded Assembly (ME-390529).

Weldor(s) _____ Date _____

18.7 Reposition the Non-IP End Extension Tube as shown in Q3 Cold Mass Welded Assembly (ME-390529) using the Horizontal Witness Line from step 11.10.

Technician(s) _____ Date _____

18.8 Tack weld the Extension Tube (MD-390667) to the Cold Mass per (ME-390529).

Weldor(s) _____ Date _____

18.9 Verify that the Expansion Loop has not been damaged and is functioning properly.

Technician(s) _____ Date _____

18.10 Reposition the Non-IP End Extension Tube while feeding the Electrical wires/Bus through the proper ports as the Non-IP End Extension Tube is brought into position against the End Plate.

Technician(s) _____ Date _____

18.11 Tack weld the Non-IP End Dome in place at approximately 6-8 places around the Dome as per Q3 Cold Mass Welded Assembly (ME-390529).

Weldor(s) _____ Date _____

18.12 Verify that the Spider Assembly (MB-430096) has not been damaged and is functioning properly.

Technician(s) [signature] Date 6/21/05

18.13 Weld the Extension Tube (MD-390667) to the Cold Mass per (ME-390529).

Weldor(s) N/A Date _____

18.14 Weld the Non-IP End Dome, skip weld around to minimize distortion as per Q3 Cold Mass Welded Assembly (ME-390529).

Weldor(s) [signature] Date 6/21/05

19.0 Suspension System Assembly

19.1 Clean the Suspension System with Ethyl Alcohol (Fermi stock 1920-0550) and Kimwipes (Fermi stock 1660-2500) or equivalent.

| Part Name | Part Number | Quantity | Completed |
|---|---|---|---|
| **Fixed Support Assembly** | **(ME-390041)** | **1** | |
| **Sliding Support Assembly** | **(ME-390042)** | **1** | |
| **Tie Bar Assembly** | **(ME-390400)** | **2** | |
| **Tie Bar Shim, 6.4mm (.250")** | **(ME-390118)** | **4** | |
| **Tie Bar Shim, 2.4mm (.093")** | **(ME-390119)** | **4** | |
| **Tie Bar Shim, 0.8mm (.031")** | **(ME-390120)** | **4** | |
| **Suspension System Adjusting Screw** | **(MB-390039)** | **8** | |
| **M16 x 70mm SHCS** | **(MA-393021)** | **8** | |
| **Washer (.656" ID x 1.38" OD x .13" THK STN STEEL)** | **(MA-390377)** | **8** | |

Label the IP End and the Non-IP End of the Vacuum Vessel with a temporary sticker or equivalent.

_____ _____
Technician(s) Date

19.2 Insert the Fixed Support Assembly (ME-390041) into the Vacuum Vessel and position at the IP End.

_____ _____
Technician(s) Date

19.3 Install the Suspension System Adjusting Screws (MB-390039) and Socket Head Cap Screws (MA-393021) into the Vacuum Vessel to hold the Fixed Support Assembly in place. Coat all screw threads with Molybdenum Disulfide prior to installation.

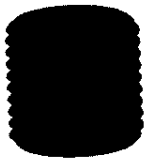

Technician(s) Date

19.4 Adjust the Vertical and rotational alignment of the Supports using the Suspension System Adjusting Screws (MB-390039). Ensure all four screws are in contact with the Support and that Diametrically Opposing Support Lugs are equidistant from the Vacuum Vessel Wall.

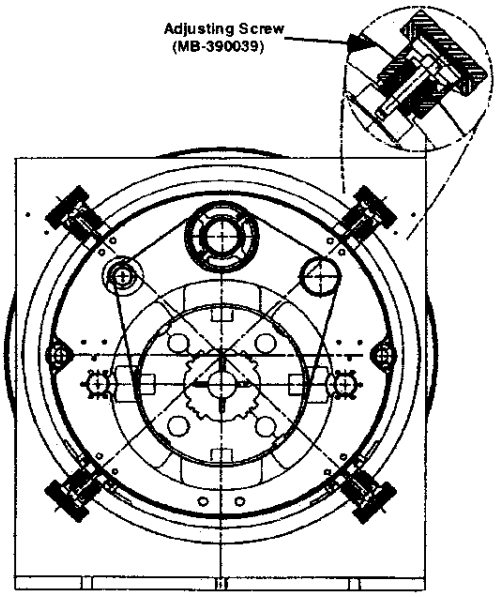


Technician(s) Date

19.5 Insert the Sliding Support Assembly (ME-390042) in to the Vacuum Vessel and position at the Non-IP End.

Technician(s) Date

19.6 Install the Suspension System Adjusting Screws (MB-390039) and Socket Head Cap Screws (MA-393021) into the Vacuum Vessel to hold the Fixed Support Assembly in place. Coat all screw threads with Molybdenum disulfide prior to installation.

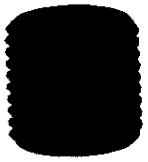

Technician(s) _____ Date _____

19.7 Adjust the Vertical and rotational alignment of the Supports using the Suspension System Adjusting Screws (MB-390039). Ensure all four screws are in contact with the Support and that Diametrically Opposing Support Lugs are equidistant from the Vacuum Vessel Wall.

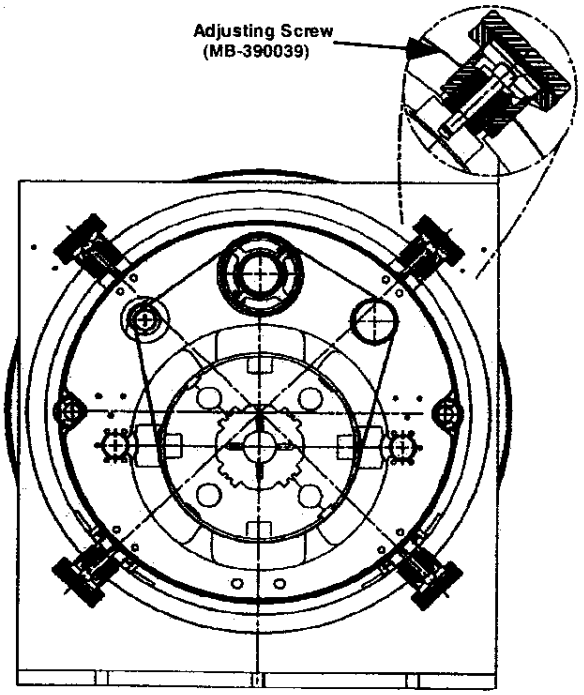


Technician(s) _____ Date _____

19.8 Assemble the Suspension System using the Fixed Support Assembly (ME-390041), the Sliding Support Assemblies (ME-390042) and the Tie Bar Assemblies (MC-390167). Insert Tie Bar Shims (MC-390118), (MB-390119) and (MB-390120) between the Sliding Support Assemblies (ME-390042) and the Tie Bar Assemblies (MC-390400) as required.
(Reference drawing: ME-390525).

_____ _____
Technician(s) Date

19.9 Measure the distance between the Suspension Rings at the bottom of the Threaded Rods and record measurements below. Copy this page and place copy in designated book for later reference. (TR-333730, Q3 Cryostat Final Assembly, Step 5.1).

**Non-IP North to IP North** _____

**Non-IP South to IP South** _____

_____ _____
Technician(s) Date

19.10 Measure from the face of the IP end vacuum vessel flange to the inside surface of the IP end suspension system.

**Record measurement here:** _____

_____ _____
Technician(s) Date

19.11 Measure from the face of the Non-IP end vacuum vessel flange to the inside surface of the Non-IP end suspension system.

**Record measurement here:** _____

_____ _____
Technician(s) Date

19.12 Label the IP End Support and the Non-IP End Support.
(Writing on the G-11 Support is acceptable).

_____ _____
Technician(s) Date

19.13 Loosen each Suspension System Adjusting Screw (MB-390039) 1/2 turn and remove the Suspension System from the Vacuum Vessel.

_____ _____
Technician(s) Date

19.14 Configure the Suspension Tooling for Q3 Assembly per Cryostat Layout Tooling & Assembly (ME-364604). Place Suspension Assembly on the tooling and make necessary adjustments to the tooling.

_____ _____
Technician(s) Date

19.15 Assemble the Suspension Mounting Brackets (MD-390279) to the Support Assemblies.

Technician(s) _____ Date _____

19.16 Slide the Suspension System over the Cold Mass and place on tooling. The Suspension system may be disassembled during this step. Record shim sizes and locations prior to disassembly.

**Note(s):**

**Ensure that the Suspension System is configured properly to the Cold Mass with respect to the IP and Non-IP Ends.**

Technician(s) _____ Date _____

19.17 Verify locking collars exist only at IP End support.

Crew Chief _____ Date _____

19.18 Establish alignment between the Cold Mass and the Support system. Install shims between the Brass Slide Bars and the Stainless Steel Blocks on each support as needed.

Record Shim size and location below.

**East-North** _____ **East South** _____

**West-North** _____ **West-South** _____

Technician(s) _____ Date _____

19.19 Verify the Alignment of the Cold Mass and the Support System.

Crew Chief _____ Date _____

19.20 Weld the Cold Mass to the Outboard Cold Mass Brackets (MB-430082) as per Q3 Module Assembly (ME-390900).

Weldor(s) _____ Date _____

19.21 Add 112.5mm to the number recorded in Step 19.10 and record below.

**Recorded measurement from Step 19.10:** _____

**Add:** + **112.5 mm**

**Record New Total:** _____

Technician(s) _____ Date _____

19.22 Add 337.5mm to the number recorded in Step 19.11 and record below.

**Recorded Measurement from Step 19.11:** _____

**Add:** + **337.5 mm**

**Record New Total:** _____

Technician(s) _____ Date _____

19.23 Position the IP End of the Beam Tube at the distance recorded in Step 19.22 from the inside surface of the IP G-10 support.

Technician(s) _____ Date _____

19.24 Measure the Non-IP End of the Beam Tube from the inside surface of the Non-IP End support. Compare this number to the number recorded in Step 19.23.

**Note(s):**

**These numbers should be the same to within 1 mm. If these numbers differ greater than 1 mm, contact Responsible Authority/Physicist.**

**Record measurement here:** _____

**Recorded measurement from Step 19.23:** _____

Technician(s) _____ Date _____

19.25 Measure from the IP End of the Beam Tube to the Spot Face on the IP End Dome. Record below.

**Record measurement here:** _____

Technician(s) _____ Date _____

19.26 Subtract 15mm from the number recorded in Step 19.26. This is the Spacer width for the IP End. Record below.

**Recorded Measurement from Step 19.26:** _____

**Subtract:** **- 15mm**

**Spacer width for the IP End:** _____

_____ _____
Technician(s) Date

19.27 Measure from the Non-IP End of the Beam Tube to the Spot Face on the Non-IP End Dome. Record below.

**Record measurement here:** _____

_____ _____
Technician(s) Date

19.28 Subtract 15mm from the number recorded in Step 19.26. This is the Spacer width for the Non-IP End. Record below.

**Recorded Measurement from Step 19.28:** _____

**Subtract:** **- 15mm**

**Spacer width for the Non-IP End:** _____

_____ _____
Technician(s) Date

20.0 Cold Bore

20.1 Position the Beam Tube (MC-369522) longitudinally per Q3 Cold Mass Welded Assembly (ME-390529).

Technician(s) _____ Date _____

20.2 Flare both ends of the Beam Tube using Flaring Tool (MC-390416) per Q3 Cold Mass Welded Assembly (ME-390529).

Technician(s) _____ Date _____

20.3 Add Spacer between Beam Tube Flange and IP End Dome, if necessary.

**Spacer Added? Yes ❒ No ❒**

Technician(s) _____ Date _____

20.4 Position Beam Tube Flange (MC-390538) over the Beam Tube and onto IP End Dome per Q3 Cold Mass Welded Assembly (ME-390529).

Technician(s) _____ Date _____

20.5 Weld the Beam Tube to the Flange at IP End as per Q3 Cold Mass Welded Assembly (ME-390529).

Weldor(s) _____ Date _____

20.6 Position the Beam Tube Flange (MC-390538) over the Beam Tube and onto the Non-IP End Dome (Q3) per Q3 Cold Mass Welded Assembly (ME-390529).

Technician(s) _____ Date _____

20.7 Weld Beam Tube to Flange at Non-IP End as per Q3 Cold Mass Welded Assembly (ME-390529).

Weldor(s) _____ Date _____

20.8 Perform a stretched wire measurement of the system to align the Beam Tube Flange within ± .5 mm.

Responsible Authority/Physicist _____ Date _____

20.9 Align Beam Tube and the Flange at IP End per Q3 Cold Mass Welded Assembly (ME-390529).

_____ _____
Technician(s) Date

20.10 Weld the Flange to the IP End Dome as per Q3 Cold Mass Welded Assembly (ME-390529).

_____ _____
Weldor(s) Date

20.11 Align Beam Tube and Flange at NON-IP End per Q3 Cold Mass Welded Assembly (ME-390529).

_____ _____
Technician(s) Date

20.12 Weld the Flange to the Non-IP End Dome as per Q3 Cold Mass Welded Assembly (ME-390529).

_____ _____
Weldor(s) Date

21.0 Electrical Inspection

21.1 Perform an electrical inspection on each of the Individual Quadrants and the Cold Mass. Refer to the Valhalla and Leader Free Standing Coil Measurement Procedure (ES-292306).

**To measure the Resistance of a Q3 Cold Mass:**

1. Use Valhalla Scientific 4300B digital micro-ohmmeter.
2. Set Test Current to 0.1 amp.
3. Set Scale to 2V full scale.
4. Turn temperature compensation on.
5. Turn test current off.
6. Connect $I_{HI}$ to "A" Lead as shown in figure 21.1-A.
7. Connect $I_{LO}$ to "B" Lead as shown in figure 21.1-A.
8. Turn test current on.
9. Connect $V_{HI}$ and $V_{LO}$ to voltage taps as shown in resistance table.
10. To measure Total with leads, connect $V_{HI}$ to "A" Lead and $V_{LO}$ to "B" Lead.
11. At the IP End, jumper the 8Ka leads as shown in Figure 21.1-A.
12. Read resistance and record in traveler.

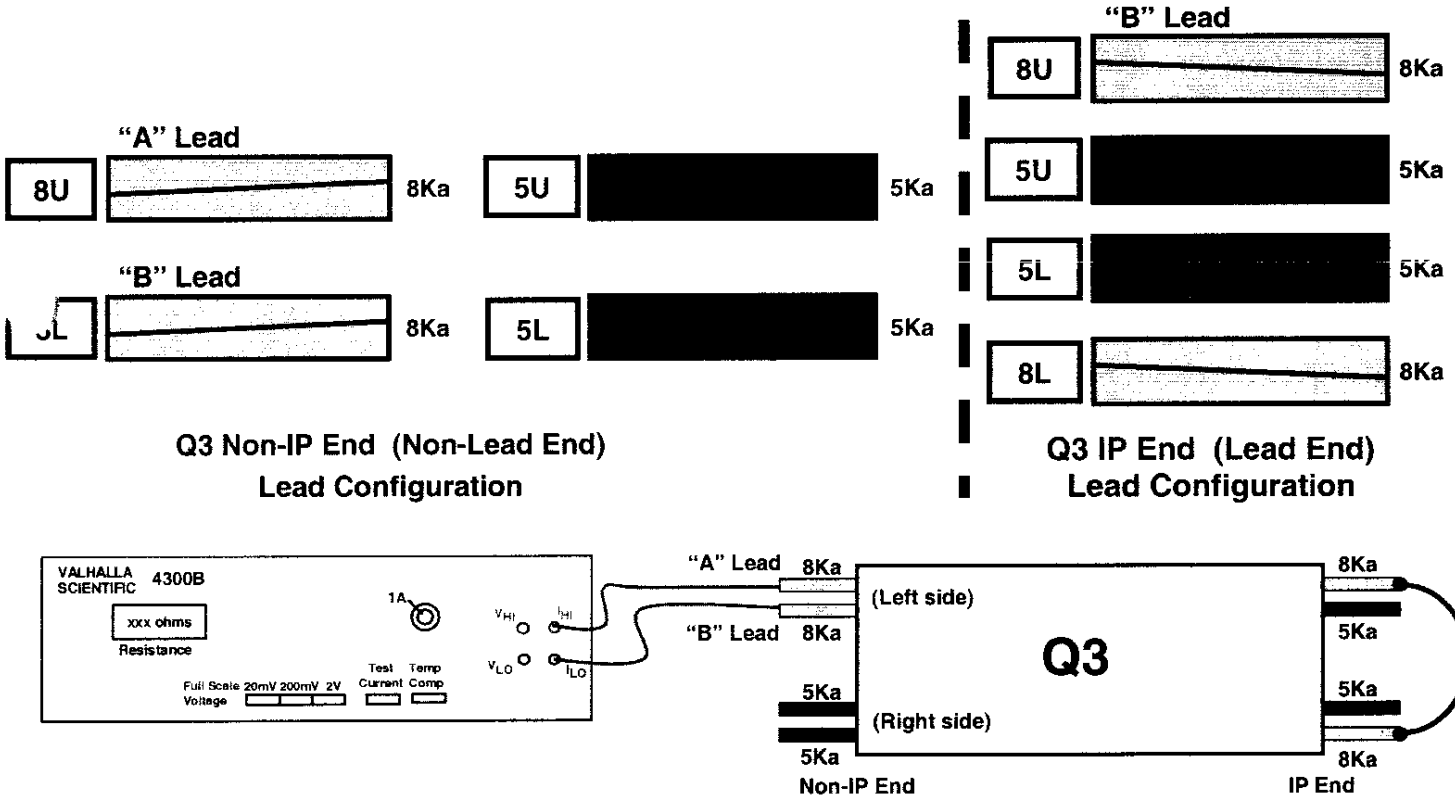


# Figure 21.1-A

| (Q3) Resistance | | | | Nominal 3.35 to 3.45 Ω |
|---|---|---|---|---|
| Voltage Tap Serial Numbers | | | | Total Resistance |
| Connect | Fermi | CERN | KEK | |
| $V_{HI}$ | VTa1Q3 | EE1113 | a1 | 3.433 Ω |
| $V_{LO}$ | VTc1Q3 | EE1213 | c1 | |
| $V_{HI}$ | VTc1Q3 | EE1213 | c1 | 3.435 Ω |
| $V_{LO}$ | VTb1Q3 | EE1313 | b1 | |

| | | | | Total Resistance with Leads |
|---|---|---|---|---|
| | | | | Nominal 6.75 to 6.85 |
| $V_{HI}$ | VTa1Q3 | EE1113 | a1 | 6.869 Ω |
| $V_{LO}$ | VTb1Q3 | EE1313 | b1 | |
| $V_{HI}$ | Q4 Power Lead | | | 6.885 Ω |
| $V_{LO}$ | Q3 Power Lead | | | |

L. Ruiz / A. Field
Technician(s)

6/21/05
Date

Check resistance of Redundant Voltage Taps.

| Q3 Redundant Voltage Taps | | | | Nominal 3.35 to 3.45 Ω |
|---|---|---|---|---|
| Connect | Fermi | CERN | KEK | Resistance |
| $V_{HI}$ | VTa2Q3 | EE1123 | a2 | 3.435 Ω |
| $V_{LO}$ | VTc2Q3 | EE1223 | c2 | |
| $V_{HI}$ | VTc2Q3 | EE1223 | c2 | 3.436 Ω |
| $V_{LO}$ | VTb2Q3 | EE1323 | b2 | |

L. Ruiz / A. Field
Technician(s)

6/21/05
Date

**To measure Ls and Q of a Q3 Cold Mass:**

1. Use Agilent 4263B LCR Meter.
2. Turn power on by pushing line button. Wait 30 seconds until display screen is lit.
3. Recall program #1. To do this, push recall (Rcl), then push #1, then push Enter.
4. Push Auto/Hold button to release hold.
5. Verify that the frequency displayed in the upper right corner of the display screen is 1000 Hz and the level recorded in the lower right corner of the display screen is 1V or 1000 mV.
6. Connect $H_{cur}$ to "A" power lead as shown in figure 21.1-B.
7. Connect $L_{cur}$ to "B" power lead as shown in figure 21.1-B.
8. Connect $H_{pot}$ and $L_{pot}$ buttons to voltage taps as shown below.
9. Read Ls and Q from display and record in table.

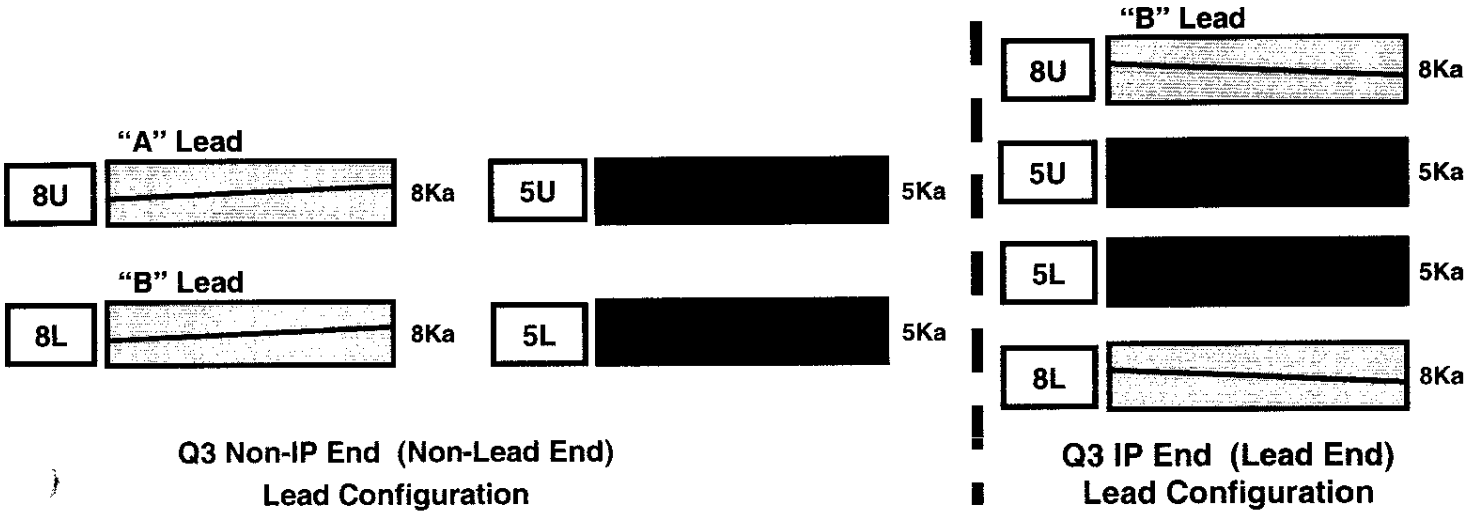


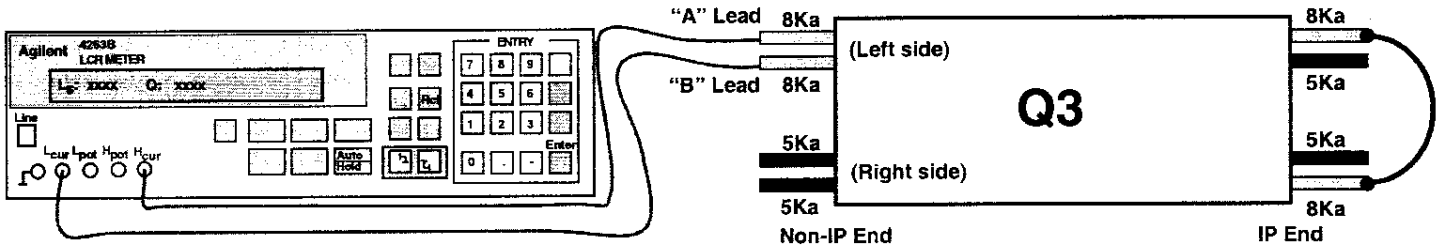


# Figure 21.1-B

| (Q3) Inductance | | | | Nominal 15 to 16 mH |
|---|---|---|---|---|
| Voltage Tap Serial Numbers | | | | Total Inductance |
| Connect | Fermi | CERN | KEK | |
| $H_{POT}$ | VTa1Q3 | EE1113 | a1 | 15.363 mH |
| $L_{POT}$ | VTc1Q3 | EE1213 | c1 | |
| $H_{POT}$ | VTc1Q3 | EE1213 | c1 | 15.370 mH |
| $L_{POT}$ | VTb1Q3 | EE1313 | b1 | |

| | | | | Nominal 30 to 32 mH |
|---|---|---|---|---|
| | | | | Total Inductance |
| $H_{POT}$ | VTa1Q3 | EE1113 | a1 | 30.676 mH |
| $L_{POT}$ | VTb1Q3 | EE1313 | b1 | |

| (Q3) Q-Factor | | | | Nominal 1.0 to 1.2 |
|---|---|---|---|---|
| Voltage Tap Serial Numbers | | | | Total Q |
| Connect | Fermi | CERN | KEK | |
| $H_{POT}$ | VTa1Q3 | EE1113 | a1 | 1.1 |
| $L_{POT}$ | VTc1Q3 | EE1213 | c1 | |
| $H_{POT}$ | VTc1Q3 | EE1213 | c1 | 1.1 |
| $L_{POT}$ | VTb1Q3 | EE1313 | b1 | |

| | | | | Nominal 1.0 to 1.2 |
|---|---|---|---|---|
| | | | | Total Q |
| $H_{POT}$ | VTa1Q3 | EE1113 | a1 | 1.1 |
| $L_{POT}$ | VTb1Q3 | EE1313 | b1 | |

L. Kuz / [illegible]
Technician(s)

6/21/05
Date

**To measure the resistance of a Thermometer (RTD):**

1. Use Hewlett Packard HP3457A digital multimeter.
2. Record temperature of building within +/- 5 degrees.
3. Press line button to turn line on.
4. Connect wires as shown in Figure below.
   U+ (Black) to Sense HI
   I+ (Yellow) to Input HI
   U- (Red) to Sense LO
   I- (Green) to Input LO
5. Push blue button (function key) once.
6. Push OHMF button.
7. Verify arrow in readout is above the 4WΩ (meaning a 4 wire resistance measurement).
8. Read resistance in ohms and record in traveler.

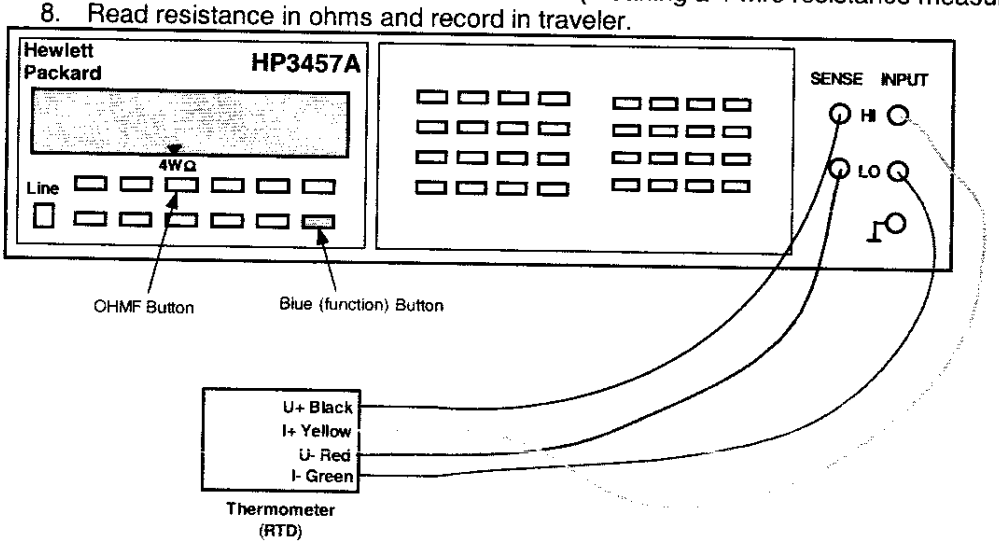


**To measure the resistance of a Cryogenic (Warm-up) Heater**

1. Use Hewlett Packard HP3457A digital multimeter.
2. Record temperature of building within +/- 5 degrees.
3. Press line button to turn line on.
4. Connect wires as shown in Figure below.
5. Push blue button (function key) once.
6. Push OHMF button.
7. Verify arrow in readout is above the 4WΩ (meaning a 4 wire resistance measurement).
   **Note: Although this is technically a 4 wire measurement, it is effectively a 2 wire measurement, since there are only 2 wires connected to each heater.**
8. Read resistance in ohms and record in traveler.

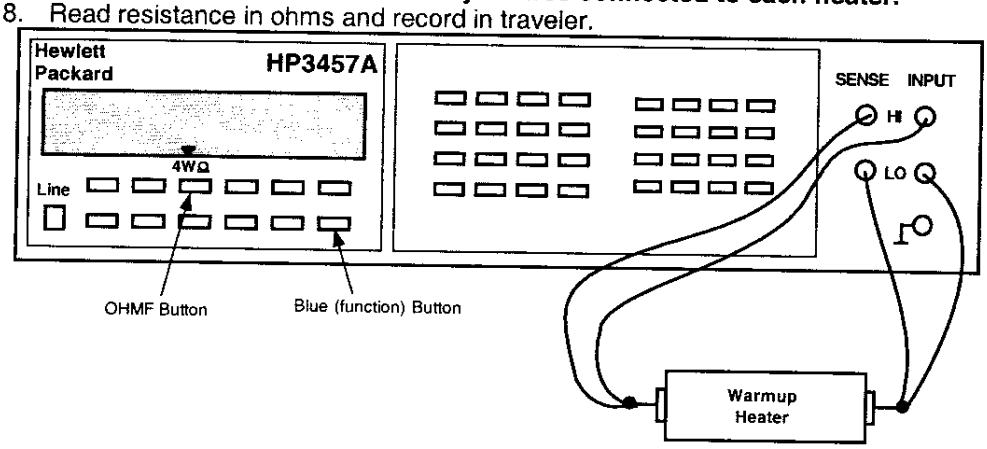

| Q3 - RTD's and Cryogenic (warm-up) Heaters | | | | |
|---|---|---|---|---|
| Temperature of Building (± 5°): _____ | | | | |
| **Component** | **Fermi** | **CERN** | **Range** | **Resistance** |
| Q3 RTD, primary | TaQ3 | TT8313 | **60 to 70 Ω** | 64.344 Ω |
| Q3 RTD, redundant | TbQ3 | TT8323 | **60 to 70 Ω** | 66.397 Ω |
| Q3 Cryogenic (warm-up) Heater (LE) - wire at top (CERN #1 I+) | W1aQ3 | EH8313+ | **16 to 18.5 Ω** | 17.765 Ω |
| Q3 Cryogenic (warm-up) Heater (LE) - wire at bottom (CERN #1 I-) | W2aQ3 | EH8313- | | |
| Q3 Cryogenic (warm-up) Heater (Non-LE) - wire at top (CERN #2 I+) | W1bQ3 | EH8323+ | **16 to 18.5 Ω** | 17.344 Ω |
| Q3 Cryogenic (warm-up) Heater (Non-LE) - wire at bottom (CERN #2 I-) | W2bQ3 | EH8323- | | |

L. Ruiz / A. Frank
Technician(s)

6/21/05
Date

Using the Hewlett Packard HP3457A digital multimeter, measure the Protection (Strip) Heater Resistance for Q3.

| Q3 Protection (Strip) Heater Resistance | | | | | |
|---|---|---|---|---|---|
| **Fermi** | **CERN** | **KEK** | **Description** | **Limit** | **Resistance** |
| **H1aQ3** | **YT1113+** | **HA1** | **Circuit A** | **28 to 32 Ω** | 30.291 Ω |
| **H2aQ3** | **YT1113-** | **HA2** | | | |
| **H1bQ3** | **YT1123+** | **HB1** | **Circuit B** | **28 to 32 Ω** | 30.371 Ω |
| **H2bQ3** | **YT1123-** | **HB2** | | | |

L. Ruiz / A. Frank
Technician(s)

6/21/05
Date

21.2 Check Q1 & Q2 Instrumentation Bus Wires for Continuity.

| Module | Pin | Fermi | CERN | KEK | Description | Done |
|---|---|---|---|---|---|---|
| M2 | 1 | VTa1Q1 | EE1111 | a1 | Q1 Lead Voltage Tap "a" , primary | ✓ |
| M2 | 2 | VTa2Q1 | EE1121 | a2 | Q1 Lead Voltage Tap "a", redundant | ✓ |
| M2 | 3 | VTc1Q1 | EE1211 | c1 | Q1 Center Voltage Tap "c", primary | ✓ |
| M2 | 4 | VTc2Q1 | EE1221 | c2 | Q1 Center Voltage Tap "c", redundant | ✓ |
| M2 | 5 | VTb1Q1 | EE1311 | b1 | Q1 Lead Voltage Tap "b", primary | ✓ |
| M3 | 1 | VTc1Q2a | EE1212 | | Q2a Center Voltage Tap "c", primary | ✓ |
| M3 | 3 | VTa2Q2a | EE1122 | | Q2a lead Voltage Tap "a", redundant | ✓ |
| M3 | 4 | VTa1Q2a | EE1112 | | Q2a Lead Voltage Tap "a", primary | ✓ |
| M3 | 5 | VTb2Q1 | EE1321 | b2 | Q1 Lead Voltage Tap "b", redundant | ✓ |
| M4 | 1 | VTc2Q2a | EE1222 | | Q2a Center Voltage Tap "c", redundant | ✓ |
| M4 | 3 | VTb1Q2a | EE1312 | | Q2a Lead Voltage Tap "b", primary | ✓ |
| M4 | 4 | VTb2Q2a | EE1322 | | Q2a Lead Voltage Tap "b", redundant | ✓ |
| M4 | 5 | VTb1Q2b | EE1612 | | Q2b lead Voltage Tap "b", primary | ✓ |
| M5 | 2 | VTc2Q2b | EE1522 | | Q2b Center Voltage Tap "c", redundant | ✓ |
| M5 | 3 | VTc1Q2b | EE1512 | | Q2b Center Voltage Tap "c", primary | ✓ |
| M5 | 5 | VTb2Q2b | EE1622 | | Q2b Lead Voltage Tap "b" redundant | ✓ |
| M6 | 1 | VTa1Q2b | EE1412 | | Q2b Lead Voltage Tap "a", primary | ✓ |
| M6 | 2 | VTa2Q2b | EE1422 | | Q2b Lead Voltage Tap "a", redundant | ✓ |
| M8 | 1 | VTH1 | EE8121 | | Corrector voltage tap Q1-H1 (skew dipole) (on MCBX, MCBXH, A+ lead) | ✓ |
| M8 | 2 | VTV1 | EE8111 | | Corrector voltage tap Q1-V1 (normal dipole) (on MCBX, MCBXV A+ lead) | ✓ |
| M8 | 3 | VTH2 | EE8122 | | Corrector voltage tap Q2-H2 (skew dipole) (on MCBX, MCBXH, A+ lead) | ✓ |
| M8 | 4 | VTV2 | EE8112 | | Corrector voltage tap Q2-V2 (normal dipole) (on MCBX, MCBXV, A+ lead) | ✓ |
| M10 | 1 | W1aQ1 | EH8311+ | | Q1 Cryogenic Heater lead end - wire at top (CERN #1 I+) | ✓ |
| M10 | 2 | W2aQ1 | EH8311- | | Q1 Cryogenic Heater lead end - wire at bottom (CERN #1 I-) | ✓ |
| M10 | 3 | W1bQ1 | EH8321+ | | Q1 Cryogenic Heater non-lead end - wire at top (CERN #2 I+) | ✓ |
| M10 | 4 | W2bQ1 | EH8321- | | Q1 Cryogenic Heater non-lead end - wire at bottom (CERN #2 I-) | ✓ |
| M11 | 1 | W1aQ2A | EH8312+ | | Q2A Cryogenic Heater lead end - wire toward cold mass end plate (CERN #1 I+) | ✓ |
| M11 | 2 | W2aQ2A | EH8312- | | Q2A Cryogenic Heater lead end - wire toward cold mass mag center (CERN #1 I-) | ✓ |
| M11 | 3 | W1bQ2A | EH8322+ | | Q2A Cryogenic Heater non-lead end- wire toward cold mass end plate (CERN #2 I+) | ✓ |

| Module | Pin | Fermi | CERN | KEK | Description | Done |
|---|---|---|---|---|---|---|
| M11 | 4 | W2bQ2A | EH8322- | | Q2A Cryogenic Heater non-lead end- wire toward cold mass mag center (CERN #2 I-) | |
| M12 | 1 | W1aQ2B | EH8332+ | | Q2B Cryogenic Heater lead end - wire toward cold mass end plate (CERN #1 I+) | |
| M12 | 2 | W2aQ2B | EH8332- | | Q2B Cryogenic Heater lead end - wire toward cold mass mag center (CERN #1 I-) | |
| M12 | 3 | W1bQ2B | EH8342+ | | Q2B Cryogenic Heater non-lead end- wire toward cold mass end plate (CERN #2 I+) | |
| M12 | 4 | W2bQ2B | EH8342- | | Q2B Cryogenic Heater non-lead end- wire toward cold mass mag center (CERN #2 I-) | |
| M14 | 1 | H1aQ1 | YT1111+ | HA1 | Q1 Protection (Strip) Heater, ("a" circuit) (CERN lead #1+) | |
| M14 | 3 | H2aQ1 | YT1111- | HA2 | Q1Protection (Strip) Heater, ("a" circuit) (CERN lead #1-) | |
| M14 | 5 | H1bQ1 | YT1121+ | HB1 | Q1 Protection (Strip) Heater, ("b" circuit) (CERN lead #2+) | |
| M15 | 2 | H1aQ2a | YT1112+ | | Q2a Protection (Strip) Heater, 1-4 & 2-3 circuit (FNAL lead A+) (CERN lead #1+) | |
| M15 | 4 | H2bQ1 | YT1121- | HB2 | Q1 Protection (Strip) Heater, ("b" circuit) (CERN lead #2-) | |
| M16 | 1 | H2aQ2a | YT1112- | | Q2a Protection (Strip) Heater, 1-4 & 2-3 circuit (FNAL lead A-) (CERN lead #1-) | |
| M16 | 3 | H1bQ2a | YT1122+ | | Q2a Protection (Strip) Heater, 1-2 & 3-4 circuit (FNAL lead B+) (CERN lead#2+) | |
| M16 | 5 | H2bQ2a | YT1122- | | Q2a Protection (Strip) Heater, 1-2 & 3-4 circuit (FNAL lead B-) (CERN lead #2-) | |
| M17 | 2 | H2aQ2b | YT1132- | | Q2b Protection (Strip) Heater, 1-4 & 2-3 circuit (FNAL lead A-) (CERN lead #1-) | |
| M17 | 4 | H1aQ2b | YT1132+ | | Q2b Protection (Strip) Heater, 1-4 & 2-3 circuit (FNAL lead A+) (CERN lead #1+) | |
| M18 | 1 | H1bQ2b | YT1142+ | | Q2b Protection (Strip) Heater, 1-2 & 3-4 circuit (FNAL lead B+) (CERN lead#2+) | |
| M18 | 3 | H2bQ2b | YT1142- | | Q2b Protection (Strip) Heater, 1-2 & 3-4 circuit (FNAL lead B-) (CERN lead #2-) | |
| M20 | 1 | TaQ1_I+ | TT8311 I+ | | Q1 RTD, primary Wire color: Yellow | |
| M20 | 2 | TaQ1_I- | TT8311 I- | | Q1 RTD, primary Wire color: Green | |
| M20 | 3 | TaQ1_V+ | TT8311 U+ | | Q1 RTD, primary Wire color: Black | |
| M20 | 4 | TaQ1_V- | TT8311 U- | | Q1 RTD, primary Wire color: Red | |
| M20 | 5 | TbQ1_I+ | TT8321 I+ | | Q1 RTD, redundant: Wire color: Yellow | |
| M20 | 6 | TbQ1_I- | TT8321 I- | | Q1 RTD, redundant: Wire color: Green | |
| M20 | 11 | TbQ1_V+ | TT8321 U+ | | Q1 RTD, redundant: Wire color: Black | |
| M20 | 10 | TbQ1_V- | TT8321 U- | | Q1 RTD, redundant: Wire color: Red | |
| M20 | 9 | TaQ2a_I+ | TT8312 I+ | | Q2a RTD, primary Wire color: Yellow | |
| M20 | 8 | TaQ2a_I- | TT8312 I- | | Q2a RTD, primary Wire color: Green | |

| Module | Pin | Fermi | CERN | KEK | Description | Done |
|---|---|---|---|---|---|---|
| M20 | 7 | TaQ2a_V+ | TT8312 U+ | | Q2a RTD, primary Wire color: Black | ✓ |
| M20 | 12 | TaQ2a_V- | TT8312 U- | | Q2a RTD, primary Wire color: Red | ✓ |
| M20 | 13 | TbQ2a_I+ | TT8322 I+ | | Q2a RTD, redundant: Wire color: Yellow | ✓ |
| M20 | 14 | TbQ2a_I- | TT8322 I- | | Q2a RTD, redundant: Wire color: Green | ✓ |
| M20 | 15 | TbQ2a_V+ | TT8322 U+ | | Q2a RTD, redundant: Wire color: Black | ✓ |
| M20 | 16 | TbQ2a_V- | TT8322 U- | | Q2a RTD, redundant: Wire color: Red | ✓ |
| M21 | 1 | TaQ2b_I+ | TT8332 I+ | | Q2b RTD, primary Wire color: Yellow | ✓ |
| M21 | 2 | TaQ2b_I- | TT8332 I- | | Q2b RTD, primary Wire color: Green | ✓ |
| M21 | 3 | TaQ2b_V+ | TT8332 U+ | | Q2b RTD, primary Wire color: Black | ✓ |
| M21 | 4 | TaQ2b_V- | TT8332 U- | | Q2b RTD, primary Wire color: Red | ✓ |
| M21 | 5 | TbQ2b_I+ | TT8342 I+ | | Q2b RTD, redundant: Wire color: Yellow | ✓ |
| M21 | 6 | TbQ2b_I- | TT8342 I- | | Q2b RTD, redundant: Wire color: Green | ✓ |
| M21 | 11 | TbQ2b_V+ | TT8342 U+ | | Q2b RTD, redundant: Wire color: Black | ✓ |
| M21 | 10 | TbQ2b_V- | TT8342 U- | | Q2b RTD, redundant: Wire color: Red | ✓ |

Technician(s) — Date: 6/21/05

Responsible Authority/Physicist — Date: 21 Jun 2005

21.3 Using the Valhalla 4300B, connect 10mA applied voltage thru the corrector Power Leads. Measure Resistance and record in the table below. Record Initial resistance of Corrector Element and record below.

**Corrector Bus Leads**

| | | | | | | | | | |
|---|---|---|---|---|---|---|---|---|---|
| | V3A | V3B | H3A | H3B | B3A | B3B | B6A | B6B | |
| | V2A | V2B | H2A | H2B | B4A | B4B | A4A | A4B | |
| | V1A | V1B | H1A | H1B | A2A | A2B | A3A | A3B | |

**(View Looking from DFBX into Q3)**

| Corrector Assembly | Corrector Element | Readout Labels | | Power Labels $I_{HI}$ | Power Labels $I_{LO}$ | Resistance | Initial Resistance |
|---|---|---|---|---|---|---|---|
| MQSX | MQSX | A2A | EE8223 | A2A | A2B | .053 | MQSX |
| | | EE8223 | A2B | | | 7.719 | |
| | | A2A | A2B | | | 7.772 | |
| MCBXA | MCBXV | V3A | EE8113 | V3A | V3B | .021 | MCBXV |
| | | EE8113 | V3B | | | 17.59 | |
| | | V3A | V3B | | | 17.60 | |
| | MCBXH | H3A | EE8123 | H3A | H3B | .009 | MCBXH |
| | | EE8123 | H3B | | | 21.60 | |
| | | H3A | H3B | | | 21.61 | |
| | MCTX | B6A | EE8613 | B6A | B6B | .01 | MCTX |
| | | EE8613 | B6B | | | 98.95 | |
| | | B6A | B6B | | | 98.95 | |
| | MCSX | B3A | EE8313 | B3A | B3B | .01 | MCSX |
| | | EE8313 | B3B | | | 28.04 | |
| | | B3A | B3B | | | 28.05 | |
| MCSOX | MCOSX | A4A | EE8423 | A4A | A4B | .06 | MCOSX |
| | | EE8423 | A4B | | | 11.63 | |
| | | A4A | A4B | | | 11.67 | |
| | MCOX | B4A | EE8413 | B4A | B4B | .05 | MCOX |
| | | EE8413 | B4B | | | 12.82 | |
| | | B4A | B4B | | | 12.82 | |
| | MCSSX | A3A | EE8323 | A3A | A3B | .05 | MCSSX |
| | | EE8323 | A3B | | | 13.28 | |
| | | A3A | A3B | | | 13.29 | |

E. Stmpl
Technician(s)

June 21, 2005
Date

21.4 Hipot the Cable Busses according to tables below. Hipots are done @ 3kV. Hold for 30 seconds.

| Ramp Rate | Hi Potential (3000 V) | Grounded | Leakage |
|---|---|---|---|
| 10 V/sec | 8L | Everything else | 15 nA |
| 10 V/sec | 5L | Everything else | 16 nA |
| 10 V/sec | 5U | Everything else | 97 nA |
| 3 V/sec.<br>Coil - Ground<br>Coil - Strip Htrs | 8U | Everything else | 883 nA |
| 3 V/sec.<br>Strip Htrs - Ground<br>Strip Htrs - Coil | Strip Heaters | Everything else | 723 nA |

Technician(s)

Date

21.5 Hipot according to tables below.

# Final Q3 Corrector and Bus Hipots

## Looking into Non-IP End of Q3

**Looking from DFBX to Q3**

Gray – 500V | Others – 0V | ### Others – 0V

| | | | | | | | | | | |
|---|---|---|---|---|---|---|---|---|---|---|
| MCBXA | | V3A | V3B | H3A | H3B | B3A | B3B | B6A | B6B | | MCBXA |
| Q2 | | V2A | V2B | H2A | H2B | B4A | B4B | A4A | A4B | | MCSOX |
| Q1 | | V1A | V1B | H1A | H1B | A2A | A2B | A3A | A3B | | |
| | | | | | | MQSX | | MCSOX | | | |

This shows the corrector bus in its final configuration as it enters the DFBX

Need to verify that there is no continuity between any of these paths

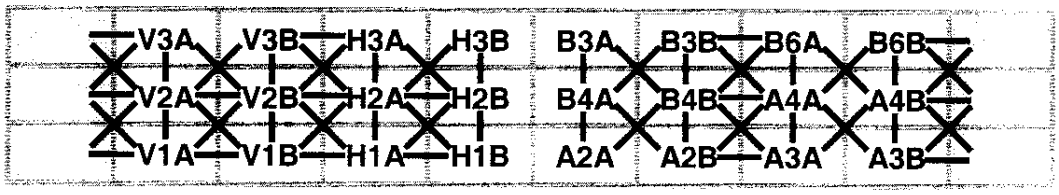


**Measurement**

**Hipot #1**
Gray – 500V
Others – 0V

| | | | | | | | | | |
|---|---|---|---|---|---|---|---|---|---|
| | V3A | V3B | H3A | H3B | B3A | B3B | B6A | B6B | |
| | V2A | V2B | H2A | H2B | B4A | B4B | A4A | A4B | |
| | V1A | V1B | H1A | H1B | A2A | A2B | A3A | A3B | |

17 nA

**Hipot #2**
Gray – 500V
Others – 0V

| | | | | | | | | | |
|---|---|---|---|---|---|---|---|---|---|
| | V3A | V3B | H3A | H3B | B3A | B3B | B6A | B6B | |
| | V2A | V2B | H2A | H2B | B4A | B4B | A4A | A4B | |
| | V1A | V1B | H1A | H1B | A2A | A2B | A3A | A3B | |

Ø 47 nA

**Hipot #3**
Gray – 500V
Others – 0V

| | | | | | | | | | |
|---|---|---|---|---|---|---|---|---|---|
| | V3A | V3B | H3A | H3B | B3A | B3B | B6A | B6B | |
| | V2A | V2B | H2A | H2B | B4A | B4B | A4A | A4B | |
| | V1A | V1B | H1A | H1B | A2A | A2B | A3A | A3B | |

60 nA

**Hipot #4**
Gray – 500V
Others – 0V

| | | | | | | | | | |
|---|---|---|---|---|---|---|---|---|---|
| | V3A | V3B | H3A | H3B | B3A | B3B | B6A | B6B | |
| | V2A | V2B | H2A | H2B | B4A | B4B | A4A | A4B | |
| | V1A | V1B | H1A | H1B | A2A | A2B | A3A | A3B | |

58
~~17~~ nA

# Final Q3 Corrector and Bus Hipots

## Looking into Non-IP End of Q3

**Looking from DFBX to Q3**

**Measurement**

**Hipot #5**
**Gray – 500V**
**Others – 0V**

| | | | | | | | | | |
|---|---|---|---|---|---|---|---|---|---|
| | V3A | V3B | H3A | H3B | B3A | B3B | B6A | B6B | |
| | V2A | V2B | H2A | H2B | B4A | B4B | A4A | A4B | |
| | V1A | V1B | H1A | H1B | A2A | A2B | A3A | A3B | |

20 nA CF ~~μA~~

**Hipot #6**
**Gray – 500V**
**Others – 0V**

| | | | | | | | | | |
|---|---|---|---|---|---|---|---|---|---|
| | V3A | V3B | H3A | H3B | B3A | B3B | B6A | B6B | |
| | V2A | V2B | H2A | H2B | B4A | B4B | A4A | A4B | |
| | V1A | V1B | H1A | H1B | A2A | A2B | A3A | A3B | |

8 nA CF ~~μA~~

**Hipot #7**
**Gray – 500V**
**Others – 0V**

| | | | | | | | | | |
|---|---|---|---|---|---|---|---|---|---|
| | V3A | V3B | H3A | H3B | B3A | B3B | B6A | B6B | |
| | V2A | V2B | H2A | H2B | B4A | B4B | A4A | A4B | |
| | V1A | V1B | H1A | H1B | A2A | A2B | A3A | A3B | |

20 nA CF ~~μA~~

Technician(s) _____ Date 6·21·05

22.0 Installation of Hypertronics

22.1 Assemble/Install Hypertronics Connectors, **without Cover** at **Non-IP End** as per Q3 Module Assembly (ME-369900). Pin Numbers for connectors are shown in Table 22.1 below.

# Table 22.1

| Module | Pin | Fermilab Label | CERN Label | KEK Label | Description |
|---|---|---|---|---|---|
| M1 | 1 | | | | Blank Module |
| M1 | 2 | | | | |
| M1 | 3 | | | | |
| M1 | 4 | | | | |
| M1 | 5 | | | | |
| | | | | | |
| M2 | 1 | VTa1Q1 | EE1111 | a1 | Q1 Lead Voltage Tap "a" , primary |
| M2 | 2 | VTa2Q1 | EE1121 | a2 | Q1 Lead Voltage Tap "a", redundant |
| M2 | 3 | VTc1Q1 | EE1211 | c1 | Q1 Center Voltage Tap "c", primary |
| M2 | 4 | VTc2Q1 | EE1221 | c2 | Q1 Center Voltage Tap "c", redundant |
| M2 | 5 | VTb1Q1 | EE1311 | b1 | Q1 Lead Voltage Tap "b", primary |
| | | | | | |
| M3 | 1 | VTc2Q2a | EE1222 | | Q2a Center Voltage Tap "c" , redundant |
| M3 | 2 | VTc1Q2a | EE1212 | | Q2a Center Voltage Tap "c" , primary |
| M3 | 3 | VTa2Q2a | EE1122 | | Q2a Lead Voltage Tap "a", redundant |
| M3 | 4 | VTa1Q2a | EE1112 | | Q2a Lead Voltage Tap "a", primary |
| M3 | 5 | VTb2Q1 | EE1321 | b2 | Q1 Lead Voltage Tap "b",redundant |
| | | | | | |
| M4 | 1 | VTb1Q2a | EE1312 | | Q2a Lead Voltage Tap "b", primary |
| M4 | 2 | VTb2Q2a | EE1322 | | Q2a Lead Voltage Tap "b", redundant |
| M4 | 3 | VTb1Q2b | EE1612 | | Q2b Lead Voltage Tap "b", primary |
| M4 | 4 | VTb2Q2b | EE1622 | | Q2b Lead Voltage Tap "b", redundant |
| M4 | 5 | VTc1Q2b | EE1512 | | Q2b Center Voltage Tap "c" , primary |
| | | | | | |
| M5 | 1 | VTa2Q3 | EE1123 | a2 | Q3 Lead Voltage Tap "a", redundant |
| M5 | 2 | VTa1Q3 | EE1113 | a1 | Q3 Lead Voltage Tap "a", primary |
| M5 | 3 | VTa2Q2b | EE1422 | | Q2b Lead Voltage Tap "a", redundant |
| M5 | 4 | VTa1Q2b | EE1412 | | Q2b Lead Voltage Tap "a", primary |
| M5 | 5 | VTc2Q2b | EE1522 | | Q2b Center Voltage Tap "c" , redundant |
| | | | | | |
| M6 | 1 | VTc1Q3 | EE1213 | c1 | Q3 Center Voltage Tap "c" , primary |
| M6 | 2 | VTc2Q3 | EE1223 | c2 | Q3 Center Voltage Tap "c" , redundant |
| M6 | 3 | VTb1Q3 | EE1313 | b1 | Q3 Lead Voltage Tap "b" , primary |
| M6 | 4 | VTb2Q3 | EE1323 | b2 | Q3 Lead Voltage Tap "b" , redundant |
| M6 | 5 | Empty | Empty | | No connection |
| | | | | | |
| M7 | 1 | | | | Blank Module |
| M7 | 2 | | | | |
| M7 | 3 | | | | |
| M7 | 4 | | | | |
| M7 | 5 | | | | |

# Table 22.1 (continued)

| Module | Pin | Fermilab Label | CERN Label | KEK Label | Description |
|---|---|---|---|---|---|
| M8 | 1 | VTH1 | EE8121 | | Corrector voltage tap Q1-H1 (skew dipole) (on MCBX, MCBXH, A+ lead) |
| M8 | 2 | VTV1 | EE8111 | | Corrector voltage tap Q1-V1 (normal dipole) (on MCBX, MCBXV A+ lead) |
| M8 | 3 | VTH2 | EE8122 | | Corrector voltage tap Q2-H2 (skew dipole) (on MCBX, MCBXH, A+ lead) |
| M8 | 4 | VTV2 | EE8112 | | Corrector voltage tap Q2-V2 (normal dipole) (on MCBX, MCBXV, A+ lead) |
| M8 | 5 | Empty | Empty | | No connection |
| | | | | | |
| M9 | 1 | VTH3 | EE8123 | | Corrector voltage tap Q3-H3 (skew dipole) (on |
| M9 | 2 | VTV3 | EE8113 | | Corrector voltage tap Q3-V3 (normal dipole) (on |
| M9 | 3 | VTA2 | EE8223 | | Corrector voltage tap Q3-A2 (skew quadrupole) (on |
| M9 | 4 | VTA3 | EE8323 | | Corrector voltage tap Q3-A3 (skew sextupole) (on |
| M9 | 5 | Empty | Empty | | No Connection |
| | | | | | |
| M10 | 1 | VTB3 | EE8313 | | Corrector voltage tap Q3-B3 (normal sextupole)(on |
| M10 | 2 | VTA4 | EE8423 | | Corrector voltage tap Q3-A4 (skew octupole) (on |
| M10 | 3 | VTB4 | EE8413 | | Corrector voltage tap Q3-B4 (normal octupole) (on |
| M10 | 4 | VTB6 | EE8613 | | Corrector voltage tap Q3-B6 (normal dodecapole) |
| M10 | 5 | Empty | Empty | | No Connection |
| | | | | | |
| M11 | 1 | | | | Blank Module |
| M11 | 2 | | | | |
| M11 | 3 | | | | |
| M11 | 4 | | | | |
| M11 | 5 | | | | |
| | | | | | |
| M12 | 1 | W1aQ1 | EH8311+ | | Q1 Cryogenic Heater lead end - wire at top (CERN |
| M12 | 2 | W2aQ1 | EH8311- | | Q1 Cryogenic Heater lead end - wire at bottom |
| M12 | 3 | W1bQ1 | EH8321+ | | Q1 Cryogenic Heater non-lead end - wire at top |
| M12 | 4 | W2bQ1 | EH8321- | | Q1 Cryogenic Heater non-lead end - wire at bottom |
| M12 | 5 | Empty | Empty | | No Connection |
| | | | | | |

# Table 22.1 (continued)

| Module | Pin | Fermilab Label | CERN Label | KEK Label | Description |
|---|---|---|---|---|---|
| M13 | 1 | W1aQ2A | EH8312+ | | Q2A Cryogenic Heater lead end - wire toward cold mass end plate (CERN #1 I+) |
| M13 | 2 | W2aQ2A | EH8312- | | Q2A Cryogenic Heater lead end - wire toward cold mass mag center (CERN #1 I-) |
| M13 | 3 | W1bQ2A | EH8322+ | | Q2A Cryogenic Heater non-lead end- wire toward cold mass end plate (CERN #2 I+) |
| M13 | 4 | W2bQ2A | EH8322- | | Q2A Cryogenic Heater non-lead end- wire toward cold mass mag center (CERN #2 I-) |
| M13 | 5 | Empty | Empty | | No connection |
| | | | | | |
| M14 | 1 | W1aQ2B | EH8332+ | | Q2B Cryogenic Heater lead end - wire toward cold mass end plate (CERN #1 I+) |
| M14 | 2 | W2aQ2B | EH8332- | | Q2B Cryogenic Heater lead end - wire toward cold mass mag center (CERN #1 I-) |
| M14 | 3 | W1bQ2B | EH8342+ | | Q2B Cryogenic Heater non-lead end- wire toward cold mass end plate (CERN #2 I+) |
| M14 | 4 | W2bQ2B | EH8342- | | Q2B Cryogenic Heater non-lead end- wire toward cold mass mag center (CERN #2 I-) |
| M14 | 5 | Empty | Empty | | No connection |
| | | | | | |
| M15 | 1 | W1aQ3 | EH8313+ | | Q3 Cryogenic Heater lead end - wire at top (CERN #1 I+) |
| M15 | 2 | W2aQ3 | EH8313- | | Q3 Cryogenic Heater lead end - wire at bottom (CERN #1 I-) |
| M15 | 3 | W1bQ3 | EH8323+ | | Q3 Cryogenic Heater non-lead end - wire at top (CERN #2 I+) |
| M15 | 4 | W2bQ3 | EH8323- | | Q3 Cryogenic Heater non-lead end - wire at bottom (CERN #2 I-) |
| M15 | 5 | Empty | Empty | | No Connection |
| | | | | | |
| M16 | 1 | | | | Blank Module |
| M16 | 2 | | | | |
| M16 | 3 | | | | |
| M16 | 4 | | | | |
| M16 | 5 | | | | |
| | | | | | |
| M17 | 1 | H1aQ1 | YT1111+ | HA1 | Q1 Protection (Strip) Heater, ("a" circuit) (CERN lead #1+) |
| M17 | 2 | Empty | Empty | | No connection |
| M17 | 3 | H2aQ1 | YT1111- | HA2 | Q1 Protection (Strip) Heater, ("a" circuit) (CERN lead #1-) |
| M17 | 4 | Empty | Empty | | No connection |
| M17 | 5 | H1bQ1 | YT1121+ | HB1 | Q1 Protection (Strip) Heater, ("b" circuit) (CERN lead #2+) |
| | | | | | |
| M18 | 1 | Empty | Empty | | No connection |
| M18 | 2 | H1aQ2a | YT1112+ | | Q2a Protection (Strip) Heater, 1-4 & 2-3 circuit (FNAL lead A+) |
| M18 | 3 | Empty | Empty | | No connection |
| M18 | 4 | H2bQ1 | YT1121- | HB2 | Q1 Protection (Strip) Heater, ("b" circuit) (CERN lead #2-) |
| M18 | 5 | Empty | Empty | | No connection |
| | | | | | |

# Table 22.1 (continued)

| Module | Pin | Fermilab Label | CERN Label | KEK Label | Description |
|---|---|---|---|---|---|
| M19 | 1 | H2aQ2a | YT1112- | | Q2a Protection (Strip) Heater, 1-4 & 2-3 circuit (FNAL lead A-) (CERN lead #1-) |
| M19 | 2 | Empty | Empty | | No connection |
| M19 | 3 | H1bQ2a | YT1122+ | | Q2a Protection (Strip) Heater, 1-2 & 3-4 circuit (FNAL lead B+) (CERN lead#2+) |
| M19 | 4 | Empty | Empty | | No connection |
| M19 | 5 | H2bQ2a | YT1122- | | Q2a Protection (Strip) Heater, 1-2 & 3-4 circuit (FNAL lead B-) (CERN lead #2-) |
| | | | | | |
| M20 | 1 | Empty | Empty | | No connection |
| M20 | 2 | H2aQ2b | YT1132- | | Q2b Protection (Strip) Heater, 1-4 & 2-3 circuit (FNAL lead A-) (CERN lead #1-) |
| M20 | 3 | Empty | Empty | | No connection |
| M20 | 4 | H1aQ2b | YT1132+ | | Q2b Protection (Strip) Heater, 1-4 & 2-3 circuit (FNAL lead A+) (CERN lead #1+) |
| M20 | 5 | Empty | Empty | | No connection |
| | | | | | |
| M21 | 1 | H1bQ2b | YT1142+ | | Q2b Protection (Strip) Heater, 1-2 & 3-4 circuit (FNAL lead B+) (CERN lead#2+) |
| M21 | 2 | Empty | Empty | | No connection |
| M21 | 3 | H2bQ2b | YT1142- | | Q2b Protection (Strip) Heater, 1-2 & 3-4 circuit (FNAL lead B-) (CERN lead #2-) |
| M21 | 4 | Empty | Empty | | No Connection |
| M21 | 5 | H1aQ3 | YT1113+ | HA1 | Q3 Protection (Strip) Heater, ("a" circuit) (CERN lead #1+) |
| | | | | | |
| M22 | 1 | Empty | Empty | | No Connection |
| M22 | 2 | H1bQ3 | YT1123+ | HB1 | Q3 Protection (Strip) Heater, ("b" circuit) (CERN lead #2+) |
| M22 | 3 | Empty | Empty | | No Connection |
| M22 | 4 | H2aQ3 | YT1113- | HA2 | Q3 Protection (Strip) Heater, ("a" circuit) (CERN lead #1-) |
| M22 | 5 | Empty | Empty | | No Connection |
| | | | | | |
| M23 | 1 | H2bQ3 | YT1123- | HB2 | Q3 Protection (Strip) Heater, ("b" circuit) (CERN lead #2-) |
| M23 | 2 | Empty | Empty | | No Connection |
| M23 | 3 | Empty | Empty | | No Connection |
| M23 | 4 | Empty | Empty | | No Connection |
| M23 | 5 | Empty | Empty | | No Connection |
| | | | | | |

| Module | Pin | Fermilab Label | CERN Label | KEK Label | Description |
|---|---|---|---|---|---|
| M24 | 1 | | | | Blank Module |
| M24 | 2 | | | | |
| M24 | 3 | | | | |
| M24 | 4 | | | | |
| M24 | 5 | | | | |
| | | | | | |
| **Note: Pin Numbers of Module M25 are not listed in numerical order.** | | | | | |
| M25 | 1 | TaQ1_I+ | TT8311 I+ | | Q1 RTD, primary Wire color: Yellow |
| M25 | 2 | TaQ1_I- | TT8311 I- | | Q1 RTD, primary Wire color: Green |
| M25 | 3 | TaQ1_V+ | TT8311 U+ | | Q1 RTD, primary Wire color: Black |
| M25 | 4 | TaQ1_V- | TT8311 U- | | Q1 RTD, primary Wire color: Red |
| M25 | 5 | TbQ1_I+ | TT8321 I+ | | Q1 RTD, redundant: Wire color: Yellow |
| M25 | 6 | TbQ1_I- | TT8321 I- | | Q1 RTD, redundant: Wire color: Green |
| M25 | 11 | TbQ1_V+ | TT8321 U+ | | Q1 RTD, redundant: Wire color: Black |
| M25 | 10 | TbQ1_V- | TT8321 U- | | Q1 RTD, redundant: Wire color: Red |
| M25 | 9 | TaQ2a_I+ | TT8312 I+ | | Q2a RTD, primary Wire color: Yellow |
| M25 | 8 | TaQ2a_I- | TT8312 I- | | Q2a RTD, primary Wire color: Green |
| M25 | 7 | TaQ2a_V+ | TT8312 U+ | | Q2a RTD, primary Wire color: Black |
| M25 | 12 | TaQ2a_V- | TT8312 U- | | Q2a RTD, primary Wire color: Red |
| M25 | 13 | TbQ2a_I+ | TT8322 I+ | | Q2a RTD, redundant: Wire color: Yellow |
| M25 | 14 | TbQ2a_I- | TT8322 I- | | Q2a RTD, redundant: Wire color: Green |
| M25 | 15 | TbQ2a_V+ | TT8322 U+ | | Q2a RTD, redundant: Wire color: Black |
| M25 | 16 | TbQ2a_V- | TT8322 U- | | Q2a RTD, redundant: Wire color: Red |
| M25 | 17 | Empty | Empty | | No connection |
| | | | | | |
| **Note: Pin Numbers of Module M26 are not listed in numerical order.** | | | | | |
| M26 | 1 | TaQ2b_I+ | TT8332 I+ | | Q2b RTD, primary Wire color: Yellow |
| M26 | 2 | TaQ2b_I- | TT8332 I- | | Q2b RTD, primary Wire color: Green |
| M26 | 3 | TaQ2b_V+ | TT8332 U+ | | Q2b RTD, primary Wire color: Black |
| M26 | 4 | TaQ2b_V- | TT8332 U- | | Q2b RTD, primary Wire color: Red |
| M26 | 5 | TbQ2b_I+ | TT8342 I+ | | Q2b RTD, redundant: Wire color: Yellow |
| M26 | 6 | TbQ2b_I- | TT8342 I- | | Q2b RTD, redundant: Wire color: Green |
| M26 | 11 | TbQ2b_V+ | TT8342 U+ | | Q2b RTD, redundant: Wire color: Black |
| M26 | 10 | TbQ2b_V- | TT8342 U- | | Q2b RTD, redundant: Wire color: Red |
| M26 | 9 | TaQ3_I+ | TT8313 I+ | | Q3 RTD, primary Wire color: Yellow |
| M26 | 8 | TaQ3_I- | TT8313 I- | | Q3 RTD, primary Wire color: Green |
| M26 | 7 | TaQ3_V+ | TT8313 U+ | | Q3 RTD, primary Wire color: Black |
| M26 | 12 | TaQ3_V- | TT8313 U- | | Q3 RTD, primary Wire color: Red |
| M26 | 13 | TbQ3_I+ | TT8323 I+ | | Q3 RTD, redundant: Wire color: Yellow |
| M26 | 14 | TbQ3_I- | TT8323 I- | | Q3 RTD, redundant: Wire color: Green |
| M26 | 15 | TbQ3_V+ | TT8323 U+ | | Q3 RTD, redundant: Wire color: Black |
| M26 | 16 | TbQ3_V- | TT8323 U- | | Q3 RTD, redundant: Wire color: Red |
| M26 | 17 | Empty | Empty | | No connection |
| | | | | | |

# Hypertronics Connector Pin Locations (Q3 non-IP end)
## VIEW: Male (pin) solder cup side

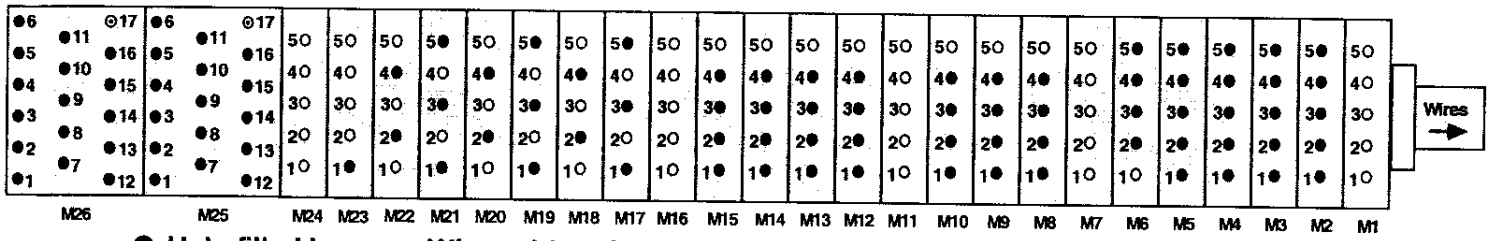


● Hole filled in grey: Wire soldered to pin.
⊙ Hole with dot in center: Pin exists but no wire soldered to it.
○ Hole filled in white: No pin. Hole is drilled out.

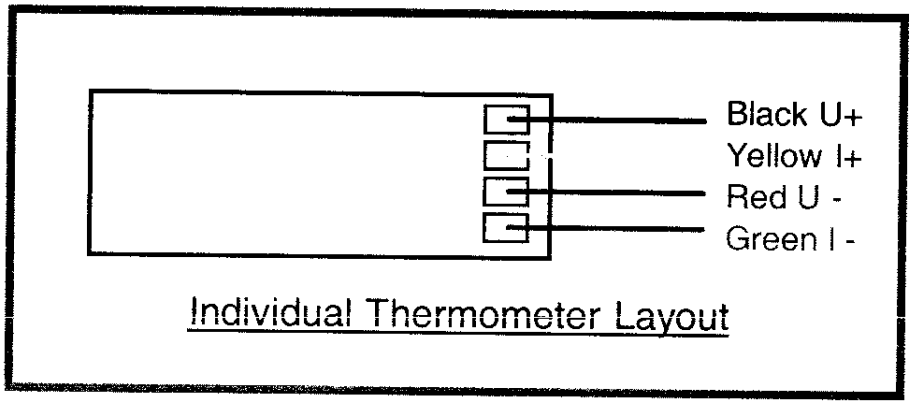


**Note(s):**

**Ensure the Hypertronics cover has NOT been installed.**

Technician(s) _____ Date _____

22.2 Assemble/Install Hypertronics Connectors, **without Cover** at **IP End** as per Q3 Module Assembly (ME-369900). Pin Numbers for connectors are shown in Table 22.2 below.

# Table 22.2

| Module | Pin | Fermilab Label | CERN Label | KEK Label | Description |
|---|---|---|---|---|---|
| M1 | 1 | | | | Blank Module |
| M1 | 2 | | | | |
| M1 | 3 | | | | |
| M1 | 4 | | | | |
| M1 | 5 | | | | |
| | | | | | |
| M2 | 1 | VTa1Q1 | EE1111 | a1 | Q1 Lead Voltage Tap "a" , primary |
| M2 | 2 | VTa2Q1 | EE1121 | a2 | Q1 Lead Voltage Tap "a", redundant |
| M2 | 3 | VTc1Q1 | EE1211 | c1 | Q1 Center Voltage Tap "c", primary |
| M2 | 4 | VTc2Q1 | EE1221 | c2 | Q1 Center Voltage Tap "c", redundant |
| M2 | 5 | VTb1Q1 | EE1311 | b1 | Q1 Lead Voltage Tap "b", primary |
| | | | | | |
| M3 | 1 | VTc1Q2a | EE1212 | | Q2a Center Voltage Tap "c", primary |
| M3 | 2 | Empty | Empty | | No connection |
| M3 | 3 | VTa2Q2a | EE1122 | | Q2a lead Voltage Tap "a", redundant |
| M3 | 4 | VTa1Q2a | EE1112 | | Q2a Lead Voltage Tap "a", primary |
| M3 | 5 | VTb2Q1 | EE1321 | b2 | Q1 Lead Voltage Tap "b", redundant |
| | | | | | |
| M4 | 1 | VTc2Q2a | EE1222 | | Q2a Center Voltage Tap "c", redundant |
| M4 | 2 | Empty | Empty | | No connection |
| M4 | 3 | VTb1Q2a | EE1312 | | Q2a Lead Voltage Tap "b", primary |
| M4 | 4 | VTb2Q2a | EE1322 | | Q2a Lead Voltage Tap "b", redundant |
| M4 | 5 | VTb1Q2b | EE1612 | | Q2b lead Voltage Tap "b", primary |
| | | | | | |
| M5 | 1 | Empty | Empty | | No connection |
| M5 | 2 | VTc2Q2b | EE1522 | | Q2b Center Voltage Tap "c", redundant |
| M5 | 3 | VTc1Q2b | EE1512 | | Q2b Center Voltage Tap "c", primary |
| M5 | 4 | Empty | Empty | | No connection |
| M5 | 5 | VTb2Q2b | EE1622 | | Q2b Lead Voltage Tap "b" redundant |
| | | | | | |
| M6 | 1 | VTa1Q2b | EE1412 | | Q2b Lead Voltage Tap "a", primary |
| M6 | 2 | VTa2Q2b | EE1422 | | Q2b Lead Voltage Tap "a", redundant |
| M6 | 3 | Empty | Empty | | No connection |
| M6 | 4 | Empty | Empty | | No connection |
| M6 | 5 | Empty | Empty | | No connection |
| | | | | | |
| M7 | 1 | | | | Blank Module |
| M7 | 2 | | | | |
| M7 | 3 | | | | |
| M7 | 4 | | | | |
| M7 | 5 | | | | |
| | | | | | |

# Table 22.2 (continued)

| Module | Pin | Fermilab Label | CERN Label | KEK Label | Description |
|---|---|---|---|---|---|
| M8 | 1 | VTH1 | EE8121 | | Corrector voltage tap Q1-H1 (skew dipole) (on MCBX, MCBXH, A+ lead) |
| M8 | 2 | VTV1 | EE8111 | | Corrector voltage tap Q1-V1 (normal dipole) (on MCBX, MCBXV A+ lead) |
| M8 | 3 | VTH2 | EE8122 | | Corrector voltage tap Q2-H2 (skew dipole) (on MCBX, MCBXH, A+ lead) |
| M8 | 4 | VTV2 | EE8112 | | Corrector voltage tap Q2-V2 (normal dipole) (on MCBX, MCBXV, A+ lead) |
| M8 | 5 | Empty | Empty | | No connection |
| | | | | | |
| M9 | 1 | | | | Blank Module |
| M9 | 2 | | | | |
| M9 | 3 | | | | |
| M9 | 4 | | | | |
| M9 | 5 | | | | |
| | | | | | |
| M10 | 1 | W1aQ1 | EH8311+ | | Q1 Cryogenic Heater lead end - wire at top (CERN #1 I+) |
| M10 | 2 | W2aQ1 | EH8311- | | Q1 Cryogenic Heater lead end - wire at bottom (CERN #1 I-) |
| M10 | 3 | W1bQ1 | EH8321+ | | Q1 Cryogenic Heater non-lead end - wire at top (CERN #2 I+) |
| M10 | 4 | W2bQ1 | EH8321- | | Q1 Cryogenic Heater non-lead end - wire at bottom (CERN #2 I-) |
| M10 | 5 | Empty | Empty | | No connection |
| | | | | | |
| M11 | 1 | W1aQ2A | EH8312+ | | Q2A Cryogenic Heater lead end - wire toward cold mass end plate (CERN #1 I+) |
| M11 | 2 | W2aQ2A | EH8312- | | Q2A Cryogenic Heater lead end - wire toward cold mass mag center (CERN #1 I-) |
| M11 | 3 | W1bQ2A | EH8322+ | | Q2A Cryogenic Heater non-lead end- wire toward cold mass end plate (CERN #2 I+) |
| M11 | 4 | W2bQ2A | EH8322- | | Q2A Cryogenic Heater non-lead end- wire toward cold mass mag center (CERN #2 I-) |
| M11 | 5 | Empty | Empty | | No connection |
| | | | | | |
| M12 | 1 | W1aQ2B | EH8332+ | | Q2B Cryogenic Heater lead end - wire toward cold mass end plate (CERN #1 I+) |
| M12 | 2 | W2aQ2B | EH8332- | | Q2B Cryogenic Heater lead end - wire toward cold mass mag center (CERN #1 I-) |
| M12 | 3 | W1bQ2B | EH8342+ | | Q2B Cryogenic Heater non-lead end- wire toward cold mass end plate (CERN #2 I+) |
| M12 | 4 | W2bQ2B | EH8342- | | Q2B Cryogenic Heater non-lead end- wire toward cold mass mag center (CERN #2 I-) |
| M12 | 5 | Empty | Empty | | No connection |
| | | | | | |

# Table 22.2 (continued)

| Module | Pin | Fermilab Label | CERN Label | KEK Label | Description |
|---|---|---|---|---|---|
| M13 | 1 | | | | Blank Module |
| M13 | 2 | | | | |
| M13 | 3 | | | | |
| M13 | 4 | | | | |
| M13 | 5 | | | | |
| | | | | | |
| M14 | 1 | H1aQ1 | YT1111+ | HA1 | Q1 Protection (Strip) Heater, ("a" circuit) (CERN lead |
| M14 | 2 | Empty | Empty | | No connection |
| M14 | 3 | H2aQ1 | YT1111- | HA2 | Q1Protection (Strip) Heater, ("a" circuit) (CERN lead #1- |
| M14 | 4 | Empty | Empty | | No connection |
| M14 | 5 | H1bQ1 | YT1121+ | HB1 | Q1 Protection (Strip) Heater, ("b" circuit) (CERN lead |
| | | | | | |
| M15 | 1 | Empty | Empty | | No connection |
| M15 | 2 | H1aQ2a | YT1112+ | | Q2a Protection (Strip) Heater, 1-4 & 2-3 circuit (FNAL lead A+) (CERN lead #1+) |
| M15 | 3 | Empty | Empty | | No connection |
| M15 | 4 | H2bQ1 | YT1121- | HB2 | Q1 Protection (Strip) Heater, ("b" circuit) (CERN lead |
| M15 | 5 | Empty | Empty | | No connection |
| | | | | | |
| M16 | 1 | H2aQ2a | YT1112- | | Q2a Protection (Strip) Heater, 1-4 & 2-3 circuit (FNAL lead A-) (CERN lead #1-) |
| M16 | 2 | Empty | Empty | | No connection |
| M16 | 3 | H1bQ2a | YT1122+ | | Q2a Protection (Strip) Heater, 1-2 & 3-4 circuit (FNAL lead B+) (CERN lead#2+) |
| M16 | 4 | Empty | Empty | | No connection |
| M16 | 5 | H2bQ2a | YT1122- | | Q2a Protection (Strip) Heater, 1-2 & 3-4 circuit (FNAL lead B-) (CERN lead #2-) |
| | | | | | |
| M17 | 1 | Empty | Empty | | No connection |
| M17 | 2 | H2aQ2b | YT1132- | | Q2b Protection (Strip) Heater, 1-4 & 2-3 circuit (FNAL lead A-) (CERN lead #1-) |
| M17 | 3 | Empty | Empty | | No connection |
| M17 | 4 | H1aQ2b | YT1132+ | | Q2b Protection (Strip) Heater, 1-4 & 2-3 circuit (FNAL lead A+) (CERN lead #1+) |
| M17 | 5 | Empty | Empty | | No connection |
| | | | | | |
| M18 | 1 | H1bQ2b | YT1142+ | | Q2b Protection (Strip) Heater, 1-2 & 3-4 circuit (FNAL lead B+) (CERN lead#2+) |
| M18 | 2 | Empty | Empty | | No connection |
| M18 | 3 | H2bQ2b | YT1142- | | Q2b Protection (Strip) Heater, 1-2 & 3-4 circuit (FNAL lead B-) (CERN lead #2-) |
| M18 | 4 | Empty | Empty | | No connection |
| M18 | 5 | Empty | Empty | | No connection |
| | | | | | |
| M19 | 1 | | | | Blank Module |
| M19 | 2 | | | | |
| M19 | 3 | | | | |
| M19 | 4 | | | | |
| M19 | 5 | | | | |

# Table 22.2 (continued)

| Module | Pin | Fermilab Label | CERN Label | KEK Label | Description |
|---|---|---|---|---|---|
| **NOTE: PIN NUMBERS OF MODULE M20 ARE NOT LISTED IN NUMERICAL ORDER.** | | | | | |
| M20 | 1 | TaQ1_I+ | TT8311 I+ | | Q1 RTD, primary Wire color: Yellow |
| M20 | 2 | TaQ1_I- | TT8311 I- | | Q1 RTD, primary Wire color: Green |
| M20 | 3 | TaQ1_V+ | TT8311 U+ | | Q1 RTD, primary Wire color: Black |
| M20 | 4 | TaQ1_V- | TT8311 U- | | Q1 RTD, primary Wire color: Red |
| M20 | 5 | TbQ1_I+ | TT8321 I+ | | Q1 RTD, redundant: Wire color: Yellow |
| M20 | 6 | TbQ1_I- | TT8321 I- | | Q1 RTD, redundant: Wire color: Green |
| M20 | 11 | TbQ1_V+ | TT8321 U+ | | Q1 RTD, redundant: Wire color: Black |
| M20 | 10 | TbQ1_V- | TT8321 U- | | Q1 RTD, redundant: Wire color: Red |
| M20 | 9 | TaQ2a_I+ | TT8312 I+ | | Q2a RTD, primary Wire color: Yellow |
| M20 | 8 | TaQ2a_I- | TT8312 I- | | Q2a RTD, primary Wire color: Green |
| M20 | 7 | TaQ2a_V+ | TT8312 U+ | | Q2a RTD, primary Wire color: Black |
| M20 | 12 | TaQ2a_V- | TT8312 U- | | Q2a RTD, primary Wire color: Red |
| M20 | 13 | TbQ2a_I+ | TT8322 I+ | | Q2a RTD, redundant: Wire color: Yellow |
| M20 | 14 | TbQ2a_I- | TT8322 I- | | Q2a RTD, redundant: Wire color: Green |
| M20 | 15 | TbQ2a_V+ | TT8322 U+ | | Q2a RTD, redundant: Wire color: Black |
| M20 | 16 | TbQ2a_V- | TT8322 U- | | Q2a RTD, redundant: Wire color: Red |
| M20 | 17 | Empty | Empty | | No connection |
| | | | | | |
| **NOTE: PIN NUMBERS OF MODULE M21 ARE NOT LISTED IN NUMERICAL ORDER.** | | | | | |
| M21 | 1 | TaQ2b_I+ | TT8332 I+ | | Q2b RTD, primary Wire color: Yellow |
| M21 | 2 | TaQ2b_I- | TT8332 I- | | Q2b RTD, primary Wire color: Green |
| M21 | 3 | TaQ2b_V+ | TT8332 U+ | | Q2b RTD, primary Wire color: Black |
| M21 | 4 | TaQ2b_V- | TT8332 U- | | Q2b RTD, primary Wire color: Red |
| M21 | 5 | TbQ2b_I+ | TT8342 I+ | | Q2b RTD, redundant: Wire color: Yellow |
| M21 | 6 | TbQ2b_I- | TT8342 I- | | Q2b RTD, redundant: Wire color: Green |
| M21 | 11 | TbQ2b_V+ | TT8342 U+ | | Q2b RTD, redundant: Wire color: Black |
| M21 | 10 | TbQ2b_V- | TT8342 U- | | Q2b RTD, redundant: Wire color: Red |
| M21 | 9 | Empty | Empty | | No connection |
| M21 | 8 | Empty | Empty | | No connection |
| M21 | 7 | Empty | Empty | | No connection |
| M21 | 12 | Empty | Empty | | No connection |
| M21 | 13 | Empty | Empty | | No connection |
| M21 | 14 | Empty | Empty | | No connection |
| M21 | 15 | Empty | Empty | | No connection |
| M21 | 16 | Empty | Empty | | No connection |
| M21 | 17 | Empty | Empty | | No connection |
| | | | | | |

# Hypertronics Connector Pin Locations Q3 Lead (IP) End
# VIEW: Female (receptacle) solder cup side

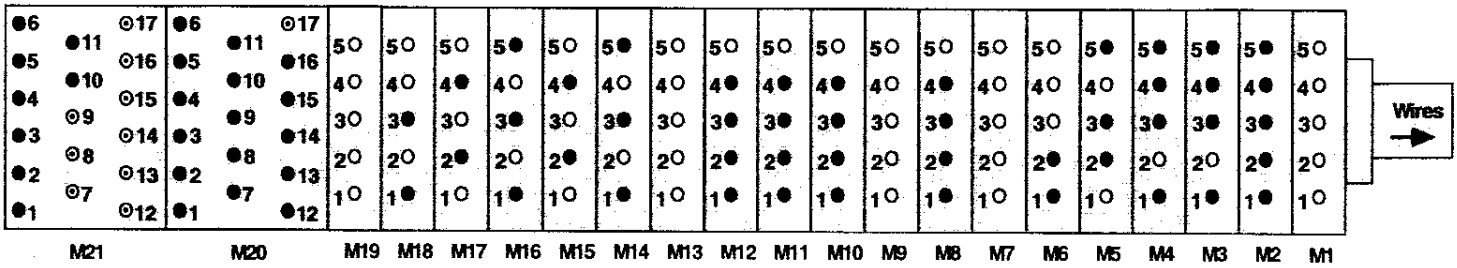


- ● **Hole filled in grey: Wire soldered to pin.**
- ⊙ **Hole with dot in center: Pin exists but no wire soldered to it.**
- ○ **Hole filled in white: No pin. Hole is drilled out.**

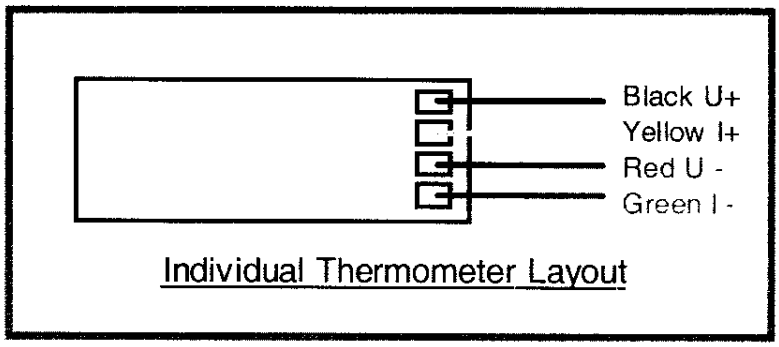


**Note(s):**

**Ensure the Hypertronics cover has NOT been installed.**

Technician(s) _____ Date _____

22.3 Perform electrical inspections of the Hypertronics connectors:

**#1 - Test of Q3 Fixed Voltage Taps**

Apply 1A current between BUS #1 & BUS #2 on the Feed End (See Figure 22.3-A)

1. Clamp Bus #1 to Bus #2 on Return End.
2. Connect Current Source: BUS #1 to Positive and BUS #2 to Negative.

Use a 3457 or equivalent Digital Voltmeter and record measurement to four decimal places.

Use the Two-Wires Voltage Measurement Technique:

1. Connect Digital Voltmeter LO wire to BUS#2 (or Negative output of Power source).
2. HI wire of Digital Voltmeter will move through wires to measure V.

**DO NOT USE DC CURRENT LARGER THAN 2A.**

**DO NOT APPLY CURRENT THROUGH MAGNET LONGER THAN 30MIN.**

| |
|---|
| BUS #1 |
| BUS #2 |
| BUS #3 |
| BUS #4 |

**Power Bus Location Return End**

| | |
|---|---|
| BUS #1 | BUS #2 |
| BUS #3 | BUS #4 |

**Power Bus Location Feed End**

# Figure 22.3-A

| HYPERTRONICS CONNECTOR | | FNAL Labels | Description | Wire Labels | Expected Voltage,V | Measured |
|---|---|---|---|---|---|---|
| Module | Pin | | | | | |
| M5 | 2 | VTa1Q3 | Q3 Lead Voltage Tap "a", primary | EE1113 | 7.0000 | |
| M5 | 1 | VTa2Q3 | Q3 Lead Voltage Tap "a", redundant | EE1123 | 7.0000 | |
| M6 | 3 | VTb1Q3 | Q3 lead Voltage Tap "b", primary | EE1313 | 0.0030 | |
| M6 | 4 | VTb2Q3 | Q3 Lead Voltage Tap "b" redundant | EE1323 | 0.0030 | |
| M6 | 1 | VTc1Q3 | Q3 Center Voltage Tap "c", primary | EE1213 | 3.5000 | |
| M6 | 2 | VTc2Q3 | Q3 Center Voltage Tap "c", redundant | EE1223 | 3.5000 | |
| | | | | | Across BUS #1 and BUS #2: | |

Technician(s) _____ Date _____

## #2 – Cryostat Heater Checkout

Measure resistance across each heater using a handheld meter.
Measure resistance from heater to ground using a handheld meter.

| Module | Pin | | Expected Resistance, OHM | Measured Resistance, OHM | FNAL Label | Description |
|---|---|---|---|---|---|---|
| M15 | 1 | EH8313+ | 17 | 17.745 | W1aQ3 | Q3 Cryogenic Heater lead end - wire toward cold mass end plate (CERN #1 I+) |
| M15 | 2 | EH8313- | | | W2aQ3 | Q3 Cryogenic Heater lead end - wire toward cold mass mag center (CERN #1 I-) |
| M15 | 3 | EH8323+ | 17 | 17.345 | W1bQ3 | Q3 Cryogenic Heater non-lead end- wire toward cold mass end plate (CERN #2 I+) |
| M15 | 4 | EH8323- | | | W2bQ3 | Q3 Cryogenic Heater non-lead end- wire toward cold mass mag center (CERN #2 I-) |
| M15 | 1 | EH8313+ | more than 20M Ω | _____ | W1aQ3 | Q3 Cryogenic Heater lead end - wire toward cold mass end plate (CERN #1 I+) |
| | | GROUND | | | | |
| M15 | 3 | EH8323+ | more than 20M Ω | _____ | W1bQ3 | Q3 Cryogenic Heater non-lead end- wire toward cold mass end plate (CERN #2 I+) |
| | | GROUND | | | | |

_____ Technician(s)

_____ Date

## #3 – Test of Q3 Protection Strip Heaters

Measure resistance across each heater using a handheld meter.
Measure resistance from heater to ground using handheld meter.
Measure resistance from heater to coil using handheld meter.

| Module | Pin | Breakout BOX Labels | Expected Resistance, OHM | Measured Resistance, OHM | FNAL Label | Description |
|---|---|---|---|---|---|---|
| M22 | 4 | YT1113- | 30 | 36,205 | H2aQ1 | Q1 Protection (Strip) Heater, 1-4 & 2-3 circuit (FNAL lead A-) (CERN lead #1-) |
| M21 | 5 | YT1113+ | | | H1aQ1 | Q1 Protection (Strip) Heater, 1-4 & 2-3 circuit (FNAL lead A+) (CERN lead #1+) |
| M22 | 2 | YT1123+ | 30 | 36,275 | H1bQ3 | Q3 Protection (Strip) Heater, 1-2 & 3-4 circuit (FNAL lead B+) (CERN lead#2+) |
| M23 | 1 | YT1123- | | | H2bQ3 | Q3 Protection (Strip) Heater, 1-2 & 3-4 circuit (FNAL lead B-) (CERN lead #2-) |
| M22 | 4 | YT1113- | more than 20M Ω | | H2aQ3 | Q3 Protection (Strip) Heater, 1-4 & 2-3 circuit (FNAL lead A-) (CERN lead #1-) |
| | | GROUND | | | | |
| M22 | 2 | YT1123+ | more than 20M Ω | | H1bQ3 | Q3 Protection (Strip) Heater, 1-2 & 3-4 circuit (FNAL lead B+) (CERN lead#2+) |
| | | GROUND | | | | |
| M22 | 4 | YT1113- | more than 20M Ω | | H2aQ3 | Q3 Protection (Strip) Heater, 1-4 & 2-3 circuit (FNAL lead A-) (CERN lead #1-) |
| | | COIL | | | | |
| M22 | 2 | YT1123+ | more than 20M Ω | | H1bQ3 | Q3 Protection (Strip) Heater, 1-2 & 3-4 circuit (FNAL lead B+) (CERN lead#2+) |
| | | COIL | | | | |

Technician(s) _____ Date _____

## #4 – Test of Q3 RTD's

Measure resistance across each RTD using a four wire meter.
Measure resistance from RTD to ground using handheld meter.
Measure resistance from RTD to the coil using handheld meter.

| Module | Pin | Breakout BOX Labels | Expected Resistance, OHM | Measured Resistance, OHM | FNAL Label | Description |
|---|---|---|---|---|---|---|
| M26 | 9 | TT8313 I+ | 57 | 64.768 | TaQ3_I+ | Q3 RTD, primary Wire color: Yellow |
| M26 | 8 | TT8313 I- | | | TaQ3_I- | Q3 RTD, primary Wire color: Green |
| M26 | 7 | TT8313 U+ | | | TaQ3_V+ | Q3 RTD, primary Wire color: Black |
| M26 | 12 | TT8313 U- | | | TaQ3_V- | Q3 RTD, primary Wire color: Red |
| M26 | 13 | TT8323 I+ | 57 | 66.796 | TbQ3_I+ | Q3 RTD, redundant: Wire color: Yellow |
| M26 | 14 | TT8323 I- | | | TbQ3_I- | Q3 RTD, redundant: Wire color: Green |
| M26 | 15 | TT8323 U+ | | | TbQ3_V+ | Q3 RTD, redundant: Wire color: Black |
| M26 | 16 | TT8323 U- | | | TbQ3_V- | Q3 RTD, redundant: Wire color: Red |
| M26 | 9 | TT8313 I+ | more than 20M Ω | _____ | TaQ3_I+ | Q3 RTD, primary Wire color: Yellow |
| | | GROUND | | | | |
| M26 | 9 | TT8323 I+ | more than 20M Ω | _____ | TbQ3_I+ | Q3 RTD, redundant: Wire color: Yellow |
| | | GROUND | | | | |
| M26 | 9 | TT8313 I+ | more than 20M Ω | _____ | TaQ3_I+ | Q3 RTD, primary Wire color: Yellow |
| | | COIL | | | | |
| M26 | 9 | TT8323 I+ | more than 20M Ω | _____ | TbQ3_I+ | Q3 RTD, redundant: Wire color: Yellow |
| | | COIL | | | | |

_____ Technician(s)

_____ Date

## #5 – Test of Q3 Correction Coils

| Correction Coil Bus Number → | 3 | 4 | 1 | 2 | 7 | 8 | 5 | 6 | |
|---|---|---|---|---|---|---|---|---|---|
| | V3A | V3B | H3A | H3B | B3A | B3B | B6A | B6B | |
| | V2A | V2B | H2A | H2B | B4A | B4B | A4A | A4B | |
| | V1A | V1B | H1A | H1B | A2A | A2B | A3A | A3B | |

Measure resistance across both Correction Coil buses.

Measure resistance from Correction Coil to ground.

Measure resistance between taps.

Measure resistance from each tap to Correction Coil bus.

Measure continuity of Q1 Correction Coil bus.

Measure for short between Q1 Correction Coil bus and Ground.

Measure continuity of Q2 Correction Coil bus.

Measure for short between Q2 Correction Coil bus and Ground.

| Horizontal Corrector Coil | | Expected | Measured |
|---|---|---|---|
| H3-A | CCOIL BUS #1 | 23 Ω | |
| H3-B | CCOIL BUS #2 | | |
| **Vertical Corrector Coil** | | **Expected** | **Measured** |
| V3-A | CCOIL BUS #3 | 19 Ω | |
| V3-B | CCOIL BUS #4 | | |
| **A2 Corrector Coil** | | **Expected** | **Measured** |
| A2-A | CCOIL BUS #7 | 10 Ω | |
| A2-B | CCOIL BUS #8 | | |
| H3-A | CCOIL BUS #1 | > 20K Ω | |
| | GROUND | | |
| V3-A | CCOIL BUS #3 | > 20K Ω | |
| | GROUND | | |
| A2-A | CCOIL BUS #7 | > 20K Ω | |
| | GROUND | | |
| **A3 Corrector Coil resistance** | | **Expected** | **Measured** |
| A3-A | CCOIL BUS #5 | 14 Ω | |
| A3-B | CCOIL BUS #6 | | |
| **B3 Corrector Coil resistance** | | **Expected** | **Measured** |
| B3-A | CCOIL BUS #7 | 28 Ω | |
| B3-B | CCOIL BUS #8 | | |

| A4 Corrector Coil resistance | | Expected | Measured |
|---|---|---|---|
| A4-A | CCOIL BUS #5 | 12 Ω | |
| A4-B | CCOIL BUS #6 | | |
| A3-A | CCOIL BUS #1 | > 20K Ω | |
| | GND | | |
| B3-A | CCOIL BUS #3 | > 20K Ω | |
| | GND | | |
| A4-A | CCOIL BUS #7 | > 20K Ω | |
| | GND | | |
| **B4 Corrector Coil resistance** | | **Expected** | **Measured** |
| B4-A | CCOIL BUS #7 | 13 Ω | |
| B4-B | CCOIL BUS #8 | | |
| **B6 Corrector Coil resistance** | | **Expected** | **Measured** |
| B6-A | CCOIL BUS #5 | 100 Ω | |
| B6-B | CCOIL BUS #6 | | |
| B4-A | CCOIL BUS #1 | >20K Ω | |
| | GND | | |
| B6-A | CCOIL BUS #3 | >20K Ω | |
| | GND | | |

| | Expected | Measured |
|---|---|---|
| EE8123<br>EE8113 | > 20M Ω | |
| EE8123<br>EE8223 | > 20M Ω | |
| EE8123<br>EE8323 | > 20M Ω | |
| EE8123<br>EE8313 | > 20M Ω | |
| EE8123<br>EE8423 | > 20M Ω | |
| EE8123<br>EE8413 | > 20M Ω | |

| | Expected | Measured |
|---|---|---|
| EE8123<br>EE8413 | > 20M Ω | |
| EE8123<br>EE8613 | > 20M Ω | |
| EE8113<br>EE8223 | > 20M Ω | |
| EE8113<br>EE8323 | > 20M Ω | |
| EE8113<br>EE8323 | > 20M Ω | |
| EE8113<br>EE8313 | > 20M Ω | |

| | Expected | Measured |
|---|---|---|
| EE8113<br>EE8423 | > 20M Ω | |
| EE8113<br>EE8413 | > 20M Ω | |
| EE8113<br>EE8613 | > 20M Ω | |
| EE8223<br>EE8323 | > 20M Ω | |
| EE8223<br>EE8313 | > 20M Ω | |

| | Expected | Measured |
|---|---|---|
| EE8223<br>EE8613 | > 20M Ω | |
| EE8323<br>EE8313 | > 20M Ω | |
| EE8323<br>EE8423 | > 20M Ω | |
| EE8323<br>EE8413 | > 20M Ω | |
| EE8323<br>EE8613 | > 20M Ω | |

| | Expected | Measured |
|---|---|---|
| EE8223<br>EE8423 | >20M Ω | |
| EE8223<br>EE8413 | >20M Ω | |
| EE8313<br>EE8613 | >20M Ω | |
| EE8423<br>EE8413 | >20M Ω | |

| | Expected | Measured |
|---|---|---|
| EE8313<br>EE8423 | >20M Ω | |
| EE8313<br>EE8413 | >20M Ω | |
| EE8423<br>EE8613 | >20M Ω | |
| EE8413<br>EE8613 | >20M Ω | |

Measure voltage tap to each Correction Coil

| | Expected | Measured |
|---|---|---|
| H3A EE8123 | <5 Ω | |
| V3A EE8113 | <5 Ω | |
| B6A EE8613 | <5 Ω | |
| B3A EE8313 | <5 Ω | |
| A4A EE8423 | <5 Ω | |
| B4A EE8413 | <5 Ω | |
| A3A EE8323 | <5 Ω | |
| A2A EE8223 | <5 Ω | |

| | Expected | Measured |
|---|---|---|
| H3B EE8123 | 24 Ω | |
| V3B EE8113 | 19 Ω | |
| B6B EE8613 | 100 Ω | |
| B3B EE8313 | 29 Ω | |
| A4B EE8423 | 12 Ω | |
| B4B EE8413 | 13 Ω | |
| A3B EE8323 | 13 Ω | |
| A2B EE8223 | 10 Ω | |

Measure continuity of Q1 Correction Coil through bus. (Yes or No)

| Correction Coil | Bus | Continuity? |
|---|---|---|
| V1A | 3 | |
| V1B | 4 | |
| H1A | 1 | |
| H1B | 2 | |

Measure Correction Coil through bus of Q1 to Ground. (Yes or No)

| Correction Coil | Bus | Continuity? |
|---|---|---|
| V1A | 3 | |
| V1B | 4 | |
| H1A | 1 | |
| H1B | 2 | |

Measure continuity of Q2 Correction Coil through bus. (Yes or No)

| Correction Coil | Bus | Continuity? |
|---|---|---|
| V2A | 3 | |
| V2B | 4 | |
| H2A | 1 | |
| H2B | 2 | |

Measure Correction Coil through bus of Q2 to Ground. (Yes or No)

| Correction Coil | Bus | Continuity? |
|---|---|---|
| V2A | 3 | |
| V2B | 4 | |
| H2A | 1 | |
| H2B | 2 | |

Technician(s) _____ Date _____

## #6 – Test of Q3 Feed Through

Measure resistance between all 24 - Q1 feed through signals.

| Q1 | | |
|---|---|---|
| | EXPECTED Ω | OK? |
| EE1111 | < 1 Ω | ok |
| EE1121 | < 1 Ω | ok |
| EE1211 | < 1 Ω | ok |
| EE1221 | < 1 Ω | ok |
| EE1311 | < 1 Ω | ok |
| EE1321 | < 1 Ω | ok |
| EE8121 | < 1 Ω | ok |
| EE8111 | < 1 Ω | ok |
| EH8311+ | < 1 Ω | ok |
| EH8311- | < 1 Ω | ok |
| EH8321+ | < 1 Ω | ok |
| EH8321- | < 1 Ω | ok |
| YT1111+ | < 1 Ω | ok |
| YT1111- | < 1 Ω | ok |
| YT1121+ | < 1 Ω | ok |
| YT1121- | < 1 Ω | ok |
| TT8311I+ | < 1 Ω | ok |
| TT8311I- | < 1 Ω | ok |
| TT8311U+ | < 1 Ω | ok |
| TT8311U- | < 1 Ω | ok |
| TT8321I+ | < 1 Ω | ok |
| TT8321I- | < 1 Ω | ok |
| TT8321U+ | < 1 Ω | ok |
| TT8321U- | < 1 Ω | ok |

Measure resistance between all 46 - Q2 feed through signals.

| Q2 | | |
|---|---|---|
| | EXPECTED Ω | OK? |
| EE1112 | < 1 Ω | ok |
| EE1122 | < 1 Ω | ok |
| EE1212 | < 1 Ω | ok |
| EE1222 | < 1 Ω | ok |
| EE1312 | < 1 Ω | ok |
| EE1322 | < 1 Ω | ok |
| EE8122 | < 1 Ω | ok |
| EE8112 | < 1 Ω | ok |
| EH8312+ | < 1 Ω | ok |
| EH8312- | < 1 Ω | ok |
| EH8322+ | < 1 Ω | ok |
| EH8322- | < 1 Ω | ok |
| YT1112+ | < 1 Ω | ok |
| YT1112- | < 1 Ω | ok |
| YT1122+ | < 1 Ω | ok |
| YT1122- | < 1 Ω | ok |
| TT8312I+ | < 1 Ω | ok |
| TT8312I- | < 1 Ω | ok |
| TT8312U+ | < 1 Ω | ok |
| TT8312U- | < 1 Ω | ok |
| TT8322I+ | < 1 Ω | ok |
| TT8322I- | < 1 Ω | ok |
| TT8322U+ | < 1 Ω | ok |

| Q2 | | |
|---|---|---|
| | EXPECTED Ω | OK? |
| TT8322U- | < 1 Ω | ok |
| EE1412 | < 1 Ω | ok |
| EE1422 | < 1 Ω | ok |
| EE1512 | < 1 Ω | ok |
| EE1522 | < 1 Ω | ok |
| EE1612 | < 1 Ω | ok |
| EE1622 | < 1 Ω | ok |
| EH8332+ | < 1 Ω | ok |
| EH8332- | < 1 Ω | ok |
| EH8342+ | < 1 Ω | ok |
| EH8342- | < 1 Ω | ok |
| YT1132+ | < 1 Ω | ok |
| YT1132- | < 1 Ω | ok |
| YT1142+ | < 1 Ω | ok |
| YT1142- | < 1 Ω | ok |
| TT8332I+ | < 1 Ω | ok |
| TT8332I- | < 1 Ω | ok |
| TT8332U+ | < 1 Ω | ok |
| TT8332U- | < 1 Ω | ok |
| TT8342I+ | < 1 Ω | ok |
| TT8342I- | < 1 Ω | ok |
| TT8342U+ | < 1 Ω | ok |
| TT8342U- | < 1 Ω | ok |

Technician(s) _____ Date 7/6/05

22.4 Inspect Hypertronics Connector. Ensure that it is free of flux and that Kapton has been installed properly.

Responsible Authority/Physicist N/A _____ Date _____

22.5 After LHC Project Physicist / designee has signed the above step, complete the installation of the Hypertronics.

Technician(s) N/A _____ Date _____

23.0 Final Electrical Inspection

23.1 Perform an electrical inspection on each of the Individual Quadrants and the Cold Mass. Refer to the Valhalla and Leader Free Standing Coil Measurement Procedure (ES-292306).

**To measure the Resistance of a Q3 Cold Mass:**

1. Use Valhalla Scientific 4300B digital micro-ohmmeter.
2. Set Test Current to 0.1 amp.
3. Set Scale to 2V full scale.
4. Turn temperature compensation on.
5. Turn test current off.
6. Connect $I_{HI}$ to "A" Lead as shown in figure 23.1-A.
7. Connect $I_{LO}$ to "B" Lead as shown in figure 23.1-A.
8. Turn test current on.
9. Connect $V_{HI}$ and $V_{LO}$ to voltage taps as shown in resistance table.
10. To measure Total with leads, connect $V_{HI}$ to "A" Lead and $V_{LO}$ to "B" Lead.
11. At the IP End, jumper the 8Ka leads as shown in Figure 23.1-A.
12. Read resistance and record in traveler.

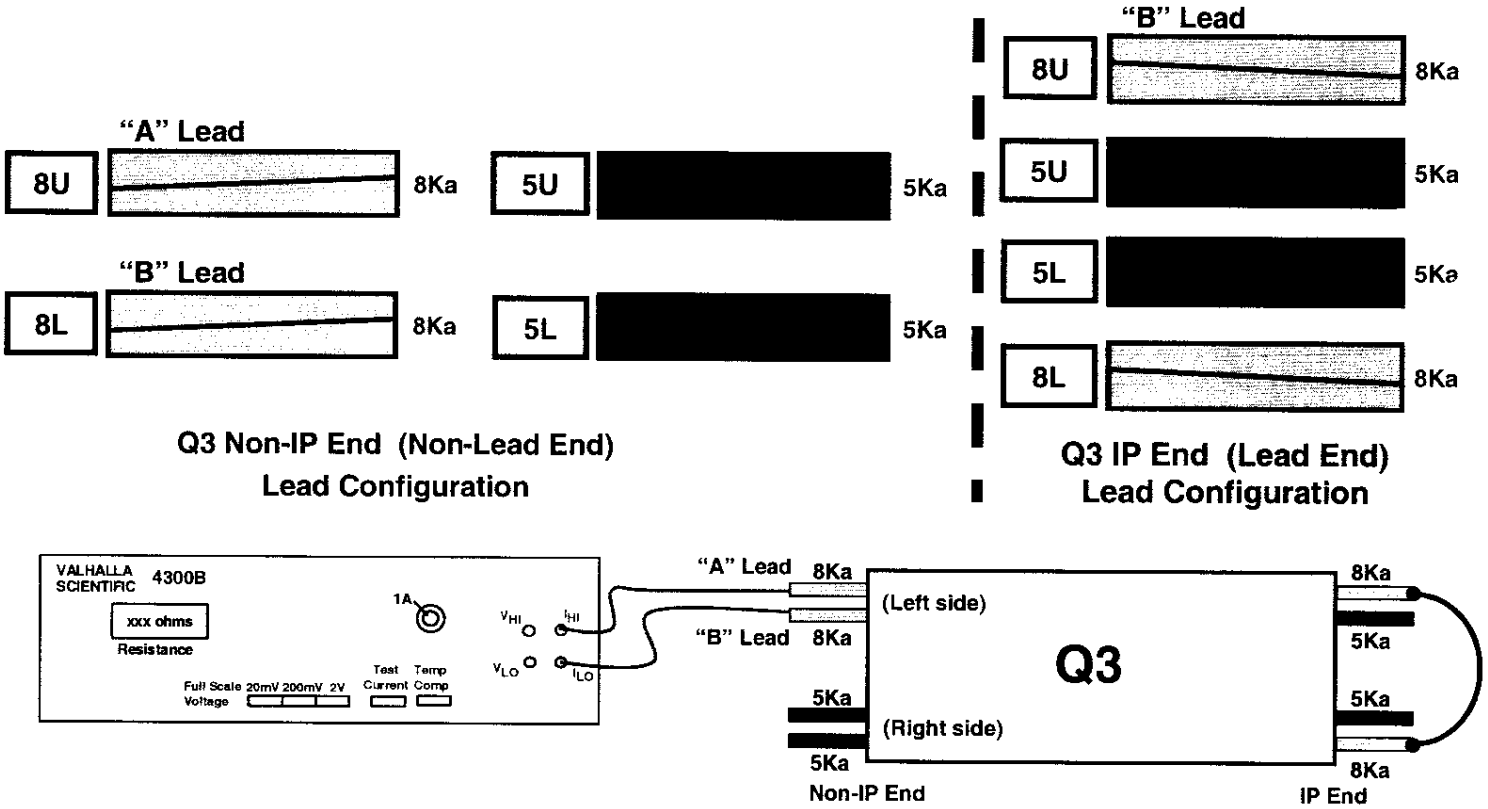


# Figure 23.1-A

| (Q3) Resistance | | | | Nominal 3.35 to 3.45 Ω |
|---|---|---|---|---|
| Voltage Tap Serial Numbers | | | | Total Resistance |
| Connect | Fermi | CERN | KEK | |
| $V_{HI}$ | VTa1Q3 | EE1113 | a1 | 3.431 Ω |
| $V_{LO}$ | VTc1Q3 | EE1213 | c1 | |
| $V_{HI}$ | VTc1Q3 | EE1213 | c1 | 3.432 Ω |
| $V_{LO}$ | VTb1Q3 | EE1313 | b1 | |
| $V_{HI}$ | VTa1Q3 | EE1113 | a1 | 6.863 Ω |
| $V_{LO}$ | VTb1Q3 | EE1313 | b1 | |

| | | Total Resistance with Leads |
|---|---|---|
| | | Nominal 6.75 to 6.85 Ω |
| $V_{HI}$ | Q4 Power Lead | 6.878 Ω |
| $V_{LO}$ | Q3 Power Lead | |

Technician(s) 7/6/05 Date

Check resistance of Redundant Voltage Taps.

| Q3 Redundant Voltage Taps | | | | Nominal 3.35 to 3.45 Ω |
|---|---|---|---|---|
| Connect | Fermi | CERN | KEK | Resistance |
| $V_{HI}$ | VTa2Q3 | EE1123 | a2 | 3.431 Ω |
| $V_{LO}$ | VTc2Q3 | EE1223 | c2 | |
| $V_{HI}$ | VTc2Q3 | EE1223 | c2 | 3.433 Ω |
| $V_{LO}$ | VTb2Q3 | EE1323 | b2 | |

Technician(s) 7/6/05 Date

**To measure Ls and Q of a Q3 Cold Mass:**

1. Use Agilent 4263B LCR Meter.
2. Turn power on by pushing line button. Wait 30 seconds until display screen is lit.
3. Recall program #1. To do this, push recall (Rcl), then push #1, then push Enter.
4. Push Auto/Hold button to release hold.
5. Verify that the frequency displayed in the upper right corner of the display screen is 1000 Hz and the level recorded in the lower right corner of the display screen is 1V or 1000 mV.
6. Connect $H_{cur}$ to "A" power lead as shown in figure 6.2-B
7. Connect $L_{cur}$ to "B" power lead as shown in figure 6.2-B.
8. Connect $H_{pot}$ and $L_{pot}$ buttons to voltage taps as shown below.
9. Read Ls and Q from display and record in table.

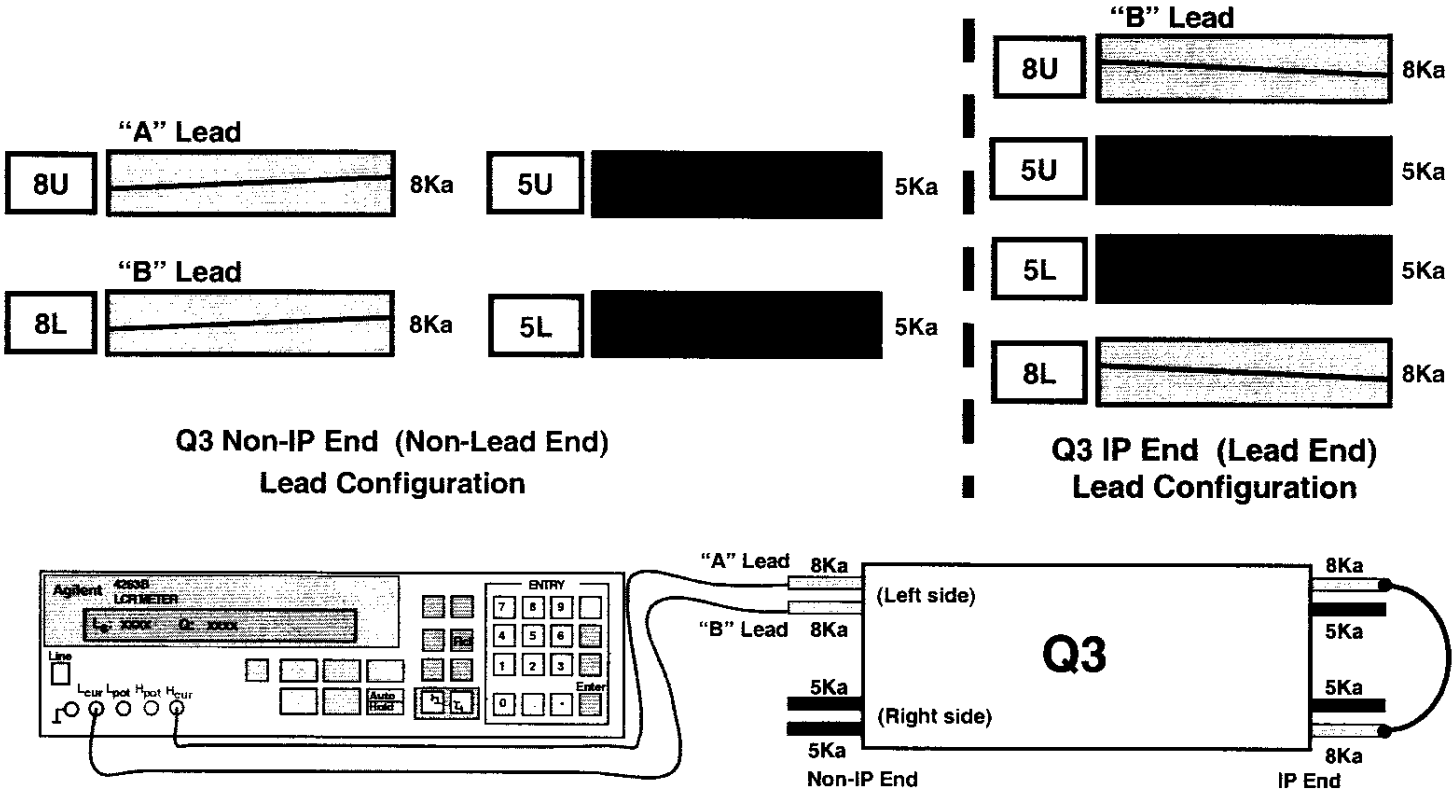


# Figure 23.1-B

| (Q3) Inductance | | | | Nominal 15 to 16 mH |
|---|---|---|---|---|
| Voltage Tap Serial Numbers | | | | Total Inductance |
| Connect | Fermi | CERN | KEK | |
| $H_{POT}$ | VTa1Q3 | EE1113 | a1 | 15.330 mH |
| $L_{POT}$ | VTc1Q3 | EE1213 | c1 | |
| $H_{POT}$ | VTc1Q3 | EE1213 | c1 | 15.287 mH |
| $L_{POT}$ | VTb1Q3 | EE1313 | b1 | |

| | | | | Nominal 30 to 32 mH |
|---|---|---|---|---|
| | | | | Total Inductance |
| $H_{POT}$ | VTa1Q3 | EE1113 | a1 | 30.610 mH |
| $L_{POT}$ | VTb1Q3 | EE1313 | b1 | |

| (Q3) Q-Factor | | | | Nominal 1.0 to 1.2 |
|---|---|---|---|---|
| Voltage Tap Serial Numbers | | | | Total Q |
| Connect | Fermi | CERN | KEK | |
| $H_{POT}$ | VTa1Q3 | EE1113 | a1 | 1.1 |
| $L_{POT}$ | VTc1Q3 | EE1213 | c1 | |
| $H_{POT}$ | VTc1Q3 | EE1213 | c1 | 1.1 |
| $L_{POT}$ | VTb1Q3 | EE1313 | b1 | |

| | | | | Nominal 1.0 to 1.2 |
|---|---|---|---|---|
| | | | | Total Q |
| $H_{POT}$ | VTa1Q3 | EE1113 | a1 | 1.1 |
| $L_{POT}$ | VTb1Q3 | EE1313 | b1 | |

Technician(s) _____ Date 7/6/05

**To measure the resistance of a Thermometer (RTD):**

1. Use Hewlett Packard HP3457A digital multimeter.
2. Record temperature of building within +/- 5 degrees.
3. Press line button to turn line on.
4. Connect wires as shown in Figure below.
   U+ (Black) to Sense HI
   I+ (Yellow) to Input HI
   U- (Red) to Sense LO
   I- (Green) to Input LO
5. Push blue button (function key) once.
6. Push OHMF button.
7. Verify arrow in readout is above the 4WΩ (meaning a 4 wire resistance measurement).
8. Read resistance in ohms and record in traveler.

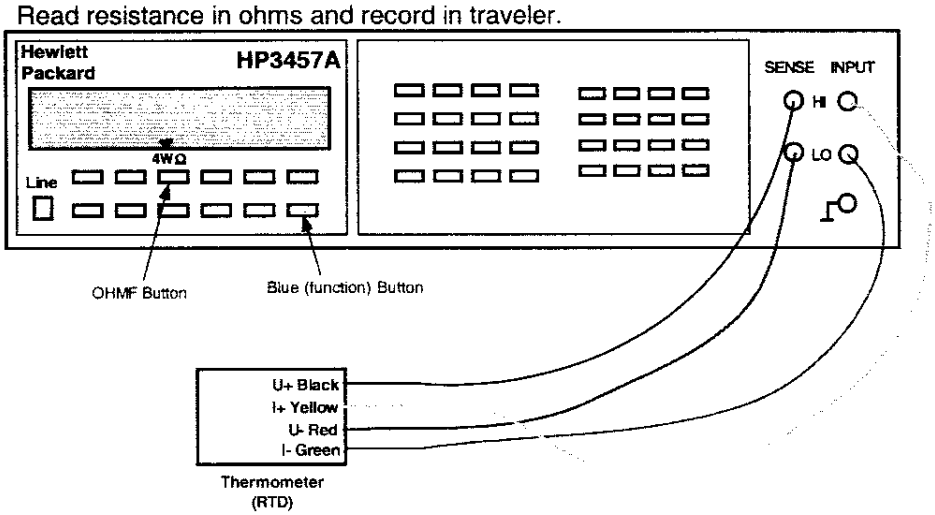


**To measure the resistance of a Cryogenic (Warm-up) Heater**

1. Use Hewlett Packard HP3457A digital multimeter.
2. Record temperature of building within +/- 5 degrees.
3. Press line button to turn line on.
4. Connect wires as shown in Figure below.
5. Push blue button (function key) once.
6. Push OHMF button.
7. Verify arrow in readout is above the 4WΩ (meaning a 4 wire resistance measurement).
   **Note: Although this is technically a 4 wire measurement, it is effectively a 2 wire measurement, since there are only 2 wires connected to each heater.**
8. Read resistance in ohms and record in traveler.

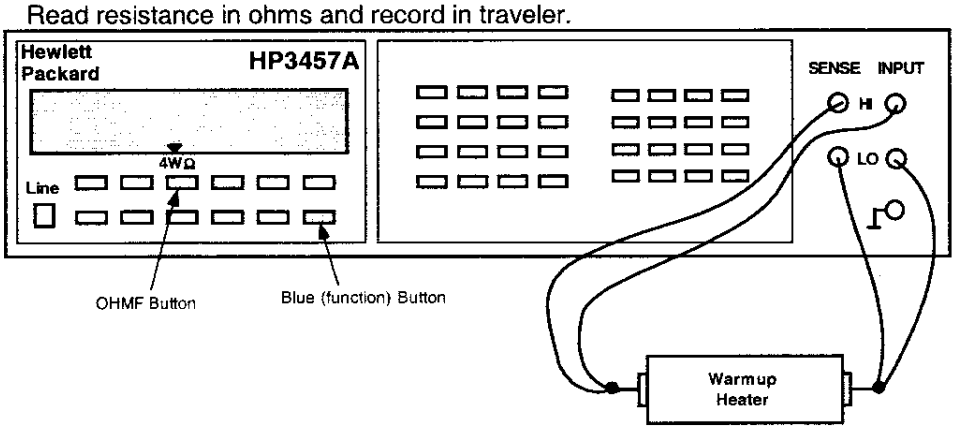

23.2 Hipot according to table below. Hipot to 3kV. Maximum leakage is 3μA.

STOP

**Have Crew Chief verify setup and sign below before continuing.**

N/A
Crew Chief _____ Date _____

**Hipot Heaters to Coil and Ground.**

| High Potential | Grounded | Floating | Leakage |
|---|---|---|---|
| All Strip Heaters | Coils, Yoke, Q3 Instrumentation Bus, Lead and Corrector Coil Busses, RTD's and Warm-up Heaters | Nothing | |

**Hipot Coil to Heaters and Ground.**

| High Potential | Grounded | Floating | Leakage |
|---|---|---|---|
| All Coils | Strip Heaters, Yoke, Q3 Instrumentation Bus, 8kA and 5kA Lead Busses and Corrector Coil Busses, RTD's and Warm-up Heaters | Nothing | |

N/A
Technician(s) _____ Date _____

STOP

23.3 Ensure electrical measurements are acceptable and confirm Hypertronics Connector has been installed properly.

Angela Hoon
Responsible Authority/Physicist _____ Date 6 JUL 2005

24.0 Production Complete

24.1 Process Engineering verify that the Q3 Cold Mass Module Assembly Traveler (5520-TR-333729) is accurate and complete. This shall include a review of all steps to ensure that all operations have been completed and signed off. Ensure that all Discrepancy Reports, Nonconformance Reports, Repair/Rework Forms, Deviation Index and dispositions have been reviewed by the Responsible Authority for conformance before being approved.

Comments:

_____

_____

_____

_____

_____

_____

Process Engineer/Designee

6/8/06
Date

| Traveler Title: | Specification No: | Revision: | DR No: |
|---|---|---|---|
| LHC Q3 LMQXC Module Assembly Traveler | 333729 | B | 4243 |

| Step No: | Drawing No: | Routing Form No: | Serial No: | Rework ID: |
|---|---|---|---|---|
| 23.2 | 369900 | | LMQXC03 | 0 |

**Discrepancy Description:**

The coil to heaters and ground hipot failed. It failed at 6 volts.

**Originator:** Steve Gould

**Date:** 5/26/2005

**Cause of Nonconformance:**

The bus assembly, as it enters the back of the spider, is insulated to protect it from the metal tube that exits the dome. The insulation consists of kapton surrounded by glass tape tied with kevlar string. A 1/16 inch thick layer of G-11 is enclosed layed on the bottom of the lead, and the glass tape surrounds it. On this magnet, the lead contacted the transition between the metal tube and the dome, slitting the glass tape, and allowing the copper lead slide out from under the G-11 strip. The lead is now contacting the dome, causing a ground short.

**Responsible Authority:** Rodger Bossert

**Date:** 5/27/2005

**Disposition:**

Remove dome (only front section). Re-insulate bus with a new system that will not allow the bus to contact the metal tube.
Disposition verify notes: (Re-issued TR-333729 LMQXC03-1 per production request. - John Szostak 6/20/05)

**Responsible Authority:** Rodger Bossert

**Date:** 5/27/2005

**Corrective Action to Prevent Recurrence:**

Correction made to LMQXC03 will need to be made to all future Q3 module assemblies.

**Responsible Authority:** Rodger Bossert

**Date:** 5/27/2005

**Corrective Action/Disposition Verified By:** John Szostak

**Date:** 6/20/2005 11:17:46 AM

**Will Configuration be affected?:** ☐ YES ☑ NO

**Identified problem area:**

☐ Material ☐ Manpower ☑ Method ☐ Machine ☐ Measurement

**Reviewed By:** Bob Jensen

**Date:** 11/7/2005