Document ID: 7913

LHC Q3 LQXC Cryostat Final Assembly Traveler

333730 / Rev. A

Job No:	**248**
E + F Project/Task No.:	**300/1.1.1.6.2**
M + S Project/Task No.:	**300/1.1.1.6.2**

Place This Side Down For Scanning!!!

LQXC03-0

Document ID:

7913

Job No.:

248

Project/Task No.

300/1.1.1.6.2

Series:

LQXC

Serial No:

LQXC03

Rework ID:

0

Specification No.:

333730

Revision:

A

LQXC03-0

Fermi National Accelerator Laboratory
Batavia, IL 60510

LARGE HADRON COLLIDER
Q3 - LQXC
CRYOSTAT FINAL ASSEMBLY TRAVELER

Reference Drawing(s):
Q3 Cryostat General Assembly (ME-390132)
Q3 Cryostat Assembly Internal Piping (ME-390213)

Project/Task Number:

Released By: *John Szostak* **Magnet/Device Series:** *LQXC*

Date Issued: *5/19/2005 1:31:05 PM* **Scanned Pages:** 49

Prepared by: J. Szostak

Title	Signature	Date
TD / E&F Process Engineering	*Bob Jensen* Bob Jensen / Designee	*5/19/05*
TD / LHC Production Supervisor	*Jim Rife* Jim Rife / Designee	*5/19/05*
TD / LHC Production Engineer	*Rodger Bossert* Rodger Bossert / Designee	*5/19/05*
TD / LHC Project Engineer Cryostat	*Tom Nicol* Tom Nicol / Designee	*5/19/05*
TD / LHC Project Physicist	*Andy Hocker* Michael Lamm / Designee	*5/19/05*
TD / LHC Program Manager	*Jim Kerby* Jim Kerby / Designee	*5/19/05*

Revision Page

Revision	Step No.	Revision Description	TRR No.	Date
None	N/A	Initial Release	N/A	9/10/04
A	4.4	Modified Step. Changed Qty of Pipe Supports (MD-390092) from 2 to 3 per LQXC01.	1689	12/15/04
	5.1	Added Step. "Install the Threaded Rods (Tie Rod Assembly) (MC-390638). See copy of step 19.9 (Q3 Module Assembly Traveler, TR-333729) in designated book, for the distance between the Suspension Rings. Record the previously recorded measurements below." per TR-333730, LQXC01 and Tom Page.		
	5.8	Moved Step. "Install the Cold Mass Insulation Mounting Lug Blankets (MC-390496)." per TR-333730, LQXC01 and Tom Page. New Step 5.2.		
	5.10	Modified Step. Added "Ensure the shield is not sagging prior to the final tightening of the shield screws." New Step 5.11. **DR No. HGQ-0509.**		
	7.2	Modified Step. Added Picture of Corrector Bus Leads. Modified Table.		
B	1.6	Added Step. "Protect the bellows during all stages of production." **DR No. HGQ-0500.**	1711	5/19/05
	3.4	Modified Step. Changed to "Attach the Leak Check sticker for the Vacuum Vessel Assembly (ME-390133) per ES-107240 to the table below." Per **DR No. HGQ-0469**.		
	4.0	Modified Step. Added, removed and re-arranged sequence of steps per marked up traveler from LHC Production Engineer.		
	4.41	Added Step. "Install the Fiducial Mounting Blocks (MB-390808) per Q3 Cold Mass Welded Assembly (ME-390529)."		
	4.42	Added Step. "Weld the Fiducial Mounting Blocks (MB-390808) per Q3 Cold Mass Welded Assembly (ME-390529)."		
	4.45	Modified Step. Added more Leak Check boxes for all three 4.5k Intercept Line Leak Checks. Added picture showing locations of each and numbering.		
	4.46	Added Step. "Leak check the Cooldown Line (MD-390225)." per production request.		
	4.47	Added Step. "Leak check the Pumping Line (MB-390224)." per production request.		
	4.66	Modified Step. Added pictures showing each of the three 4.5k Intercept Lines (MB-390226).		
	4.67	Added Step. "Leak check the Cooldown Line (MD-390225)."		
	4.68	Added Step. "Leak check the Pumping Line (MB-390224)."		
	8.5	Removed Step. "Install the Vinyl Flange Covers (MA-390491), (MA-390492), (MA-390493), (MA-390494), & the Alignment Fiducial Covers (MA-390495)." Moved to Shipping Traveler per production request.		
	8.5	Added Step. "Perform a pressurized Leak Check of the Cryostat Assembly." Per LQXC02.		

Ensure appropriate memos and specific instructions are placed with the traveler before issuing the sub traveler binder to production.

1.0 General Notes

1.1 All steps that require a sign-off shall include the Technician/Technician(s)s first initial and full last name.

1.2 No erasures or white out will be permitted to any documentation. All incorrectly entered data shall be corrected by placing a single line through the error, initial and date the error before adding the correct data.

1.3 All Discrepancy Reports issued shall be recorded in the left margin next to the applicable step.

1.4 Personnel shall perform all tasks in accordance with current applicable ES&H guidelines and those specified within the step.

1.5 Cover the product/assembly with Green Herculite (Fermi stock 1740-0100) when not being serviced or assembled.

1.6 Protect the Bellows during all stages of production.

2.0 Parts Kit List

2.1 Attach the completed Parts Kit for this production operation to this traveler. Ensure that the serial number on the Parts Kit matches the serial number of this traveler. Verify that the Parts Kit received is complete.

Bob [signature] 5/19/05

Process Engineering/Designee Date

3.0 Vacuum Vessel Preparation and Painting

3.1 Record the Vacuum Vessel Serial Number.

5

Technician(s) Date 7.6.05

3.2 Inspect the transition area between the Support Sections and Tube Sections. Grind smooth if necessary.

Technician(s) Date 7/6/05

3.3 Clean the Vacuum Vessel (ME-390133) using a vacuum cleaner or equivalent.

Technician(s) Date 7/6/05

3.4 Attach the Leak Check sticker for the Vacuum Vessel Assembly (ME-390133) per ES-107240 to the table below.

Part No.		DETERMINATION OF DETECTABLE LEAK						
PART NO. ME 390133		SCALE UNITS BEFORE HELIUM PROBE	SCALE UNITS WHILE ENCLOSURE FLOODING	93-5 DETERMINATION OF MINIMUM DETECTABLE LEAK				
DATE TIME	OPERATOR'S LAST NAME			MDS - ((Response - Bckgnd) - Leak Value) = MDL				
4/15/04	Gomes	23	23	2	56	23	5.23 -9	3.16 -8

Inspector Date 8/4/05

3.5 Prepare the outside of the Vacuum Vessel (ME-390133) for painting. Clean using Ethyl Alcohol (Fermi stock 1920-0550) and Kimwipes (Fermi stock 1660-2500) or equivalent.

O. Friary — 7 6 05
Technician(s) — Date

3.6 Mask the Stainless Steel Components of the Vacuum Vessel for painting.

O. Friary — 7 6 05
Technician(s) — Date

3.7 Prime the Vacuum Vessel using Rust-o-leum (Fermi stock 1825-4000).

O. Friary — 7 6 05
Technician(s) — Date

3.8 Verify that the Screws (MA-393036) will thread easily into the appropriate holes in the Vacuum Vessel (ME-390133). If necessary, tap out holes with M10 – 1.5 Tap. Move Vacuum Vessel (ME-390133) to Table.

[signature] — 7-6-05
Lead Person — Date

3.9 Paint the Vacuum Vessel using Flambeau Red (Fermi stock 1825-3710).

O. Friary — 7 6 05
Technician(s) — Date

4.0 Piping Assembly

Note(s):

Do not use a Strap Wrench on the Pipes.

4.1 Place the Cold Mass Assembly on the Insertion Rail System.

Technician(s) _____ Date 7-6-05

4.2 Clean the Pipe Supports with Ethyl Alcohol (Fermi stock 1920-0550) and Kimwipes (Fermi stock 1660-2500) or equivalent.

Technician(s) _____ Date 7-7-05

4.3 Install Cold Mass Insulation per Q3 Cold Mass Magnet Insulation Installation (ME-390527).

Technician(s) _____ Date 7/7/05

4.4 Install the Pipe Supports (MD-390092) (Qty. 3) on the Cold Mass per Q3 Cryostat Assembly Internal Piping (ME-390213).

Note(s):

A Tie Bar may be disconnected, if necessary, from the Fixed Support Assembly to install the central two pipe supports.

PIPE SUPPORT ASSEMBLY

Technician(s) _____ Date 7/7/05

4.5 Install Pipe Anchor (MC-390486) on the Cold Mass per Q3 Cryostat Assembly - Internal Piping (ME-390213).

Technician(s) _____ Date 7/7/05

4.6 Using Pipe Supports (MD-390092) as a template, cut the blankets around the Pipe Support Feet and slit blankets circumferentially at the Pipe Supports.

Technician(s) _____ Date 7/7/05

4.7 Remove Pipe Supports (MD-390092), Pipe Anchor (MC-390486) and blankets. Wrap blankets in plastic bag to keep clean for later use. Label blankets as they are removed for later positioning.

Technician(s) _____ Date 7 7 05

4.8 Install Pipe Supports (MD-390092) and Pipe Anchor (MC-390486) to same locations as in step 4.4 and 4.5 respectively.

Technician(s) _____ Date 7/7/05

4.9 Clean the Cold Mass and the Retainer Clips (MA-390103) with Ethyl Alcohol (Fermi stock 1920-0550) and Kimwipes (Fermi stock 1660-2500) or equivalent.

Technician(s) _____ Date 7/7/05

4.10 Weld the Retainer Clips (MA-390103) to the Cold Mass Outer Shell as per the Q3 Cryostat Internal Piping Assembly (ME-390213).

Weldor(s) _____ Date 7/7/05

4.11 Install Q3 Installation Tie Rod Assembly (MC-390638) and Tie Bar Retaining Clamp (MB-390136) as per Q3 Cryostat Internal Piping Assembly (ME-390213).

Technician(s) _____ Date 7/8/05

4.12 Clean the Q3 Heat Exchanger Outer Shell (MD-390385), Q3 Pumping Line (MB-390224) and the Q3 Cool Down Line (MB-390225) with Ethyl Alcohol (Fermi stock 1920-0550) and Kimwipes (Fermi stock 1660-2500) or equivalent.

Technician(s) _____ Date 7/8/05

4.13 Clean the Pumping Line End Flange (MB-390032), the Cool Down Line End Flange (MB-390033) and the Heat Exchanger Corrugated Tube Flange (MB-390030) with Ethyl Alcohol (Fermi stock 1920-0550) and Kimwipes (Fermi stock 1660-2500) or equivalent.

O. Fuang
Technician(s)

7/8/05
Date

4.14 Slide the Heat Exchanger Outer Shell (ME-390215) through all five supports.

Note(s):

Ensure the cross over hole in the Heat Exchanger Pipe is lined up with the elbow on the End Dome.

A Gould
Technician(s)

7/8/05
Date

4.15 Position the Q3 Pipe Anchor (MC-390486).

A Gould
Technician(s)

7/8/05
Date

4.16 Position the Heat Exchanger Weld Connector Adapter (MC-390278).

A Gould
Technician(s)

7/8/05
Date

4.17 Position the Heat Exchanger Outer Shell Pipe (ME-390215).

A Gould
Technician(s)

7/8/05
Date

4.18 Clean the Non-IP End of the Heat Exchanger Corrugated Tube (MC-390217) and the Non-IP End Inner Tube Adapter (MC-390658).

D. Ku
Technician(s)

7/8/05
Date

TRR NEEDED

4.19 Weld the Non-IP End Inner Tube Adapter (MC-390658) to the Heat Exchanger Corrugated Tube (MC-390217) per Q3 Heat Exchanger Corrugated Tube Weldment (ME-390395).

Robt A. [illegible]
~~Technician~~(s)
WELDER

7/8/05
Date

TRR 1805

4.20 Perform a Leak Check on the Non-IP End Inner Tube Adapter (MC-390658) and the Heat Exchanger Corrugated Tube (MC-390217) leak red in one set up. JW

Part No. inner tube adapt. + corrugated tube	DETERMINATION OF DETECTABLE LEAK						
	M.D.S. ÷ ((Response – Background) ÷ Leak value) = MDL						
OPERATOR'S LAST NAME	SCALE UNITS BEFORE HELIUM PROBE	SCALE UNITS WHILE ENCLOSURE FLOODING	MDS	Response	Background	Leak Value	MDL
Wilson	60X1	60X1	2	54X5	60X1	3.91 x E-8	3.72 x E-10

Part No.	DETERMINATION OF DETECTABLE LEAK						
	M.D.S. ÷ ((Response – Background) ÷ Leak value) = MDL						
OPERATOR'S LAST NAME	SCALE UNITS BEFORE HELIUM PROBE	SCALE UNITS WHILE ENCLOSURE FLOODING	MDS	Response	Background	Leak Value	MDL
						____ x E-8	____ x E-__

Jackie Wilson
Inspector

7-8-05
Date

4.21 Assemble the Q3 Heat Exchanger Corrugated Tube Assembly (ME-390216).

O. Fuang
Technician(s)

7-8-05
Date

4.22 Insert the Q3 Heat Exchanger Corrugated Tube Assembly (ME-390216).

S Gould
Technician(s)

7/8/05
Date

4.23 Position Q3 Heat Exchanger Corrugated Tube Assembly (ME-390216).

S Gould
Technician(s)

7/8/05
Date

4.24 Position the Heat Exchanger Flat End Cap (MD-390178).

Technician(s) _____ Date 7/8/05

4.25 Purge the Assembly using Argon (Ar) gas.

Technician(s) _____ Date 7-11-05

4.26 Tack weld the Heat Exchanger Weld Connector Adapter (MC-390278) to the Heat Exchanger Outer Shell (ME-390215).

Note(s):

DO NOT WELD THE HEAT EXCHANGER INNER TUBE TO THE END CAP!!!

Weldor(s) _____ Date 7-11-05

4.27 Tack weld the Heat Exchanger Weld Connector Adapter (MC-390278) to the IP End Dome 90° Elbow (MC-390220 of Non-IP End Dome Weldment MD-390219).

Note(s):

DO NOT WELD THE HEAT EXCHANGER INNER TUBE TO THE END CAP!!!

Weldor(s) _____ Date 7-11-05

4.28 Tack weld the Heat Exchanger Flat End Cap (MD-390178) to the Outer Shell Weldment (MD-390385)

Note(s):

DO NOT WELD THE HEAT EXCHANGER INNER TUBE TO THE END CAP!!!

Weldor(s) _____ Date 7-11-05

4.29 Weld the Heat Exchanger Outer Shell Pipe (ME-390215) to the Heat Exchanger Weld Connector Adapter (MC-390278) as per Q3 Cryostat Assembly Internal Piping (ME-390213).

Weldor(s) _____ Date 7-11-05

4.30 Weld the IP End Dome 90° Elbow (MC-390220 of Non-IP End Dome Weldment MD-390219) to the Heat Exchanger Weld Connector Adapter (MC-390278) as per Q3 Cryostat Assembly Internal Piping (ME-390213).

William Gaffield — Weldor(s) — 7-11-05 — Date

4.31 Weld the Heat Exchanger Flat End Cap (MD-390178) to the Outer Shell Pipe (MD-390215) as per Q3 Heat Exchanger Outer Shell Weldment (ME-390385).

William Gaffield — Weldor(s) — 7-11-05 — Date

4.32 Position the Pipe Anchor on the Cold Mass per Q3 Cryostat Assembly Internal Piping (ME-390213).

Technician(s) — 7-11-05 — Date

4.33 Weld the Heat Exchanger Outer Shell Pipe (MD-390215) to the Pipe Support (MD-390092).

William Gaffield — Weldor(s) — 7-11-05 — Date

4.34 Determine the length of the Heat Exchanger Outer Shell Extension Spool (MD-390659). (Contact Responsible Authority for details, if necessary).

Technician(s) — 7/11/05 — Date

T. Pon — Responsible Authority/Physicist — 7/11/05 — Date

4.35 Modify the Heat Exchanger Spool, if necessary.

Technician(s) — 7/11/05 — Date

4.36 Position Heat Exchanger Outer Shell Extension Spool (MD-390659).

Technician(s) — 7/11/05 — Date

4.37 Weld the Heat Exchanger Outer Shell Extension Spool (MD-390659) per Q3 Heat Exchanger Outer Shell Weldment (ME-390385).

William Gaffield — Weldor(s) B.G. — 7-12-05 — Date

DR4270

4.38 Position the Q3 Heat Exchanger Corrugated Tube Assembly (ME-390216) per Q3 Heat Exchanger Assembly (ME-390214).

Technician(s) 7-12-05 Date

TRR NEEDED!

4.39 Weld the Q3 Heat Exchanger Corrugated Tube Assembly (ME-390216) to the Outer Shell Weldment (ME-390385) as per Q3 Heat Exchanger Assembly (ME-390214).

Weldor(s) 7-12-05 Date

TRR 1805 DELETE SAME AS 4.37

~~4.40 Weld the Heat Exchanger Outer Shell Extension Spool (MD-390659) per Q3 Heat Exchanger Outer Shell Weldment (ME-390385).~~

Weldor(s) 7-12-05 Date

4.41 Weld the Heat Exchanger Corrugated Tube Flange (MB-390030) to the Heat Exchanger Outer Shell (ME-390385) as per Q3 Heat Exchanger Assembly (ME-390214).

Weldor(s) 7-12-05 Date

4.42 Insert the Cooldown Line Tube (MC-390225).

Technician(s) 7-12-05 Date

4.43 Insert the Pumping Line Tube (MB-390224).

Technician(s) 7-12-05 Date

4.44 Position the Cooldown Line Tube (MB-390225).

Technician(s) 7-12-05 Date

4.45 Position the Pumping Line Tube (MB-390224).

Technician(s) 7-12-05 Date

Le Move SEE STEPS 4.52 TRR 1805

4.46 Weld the Cooldown Line End Flange (MB-390033) to the IP End of the Q3 Cool Down Line (MB-390255) as per Q3 Cryostat Internal Piping Assembly (ME-390213).

Weldor(s) 7-12-05 Date

4.47 Weld the Pumping Line Flange (MC-390032) to the IP End of the Pumping Line Tube (MB-390224) per Q3 Cryostat Internal Piping Assembly (ME-390213).

William Garfield — 7-12-05
Weldor(s) — Date

4.48 Position the Cooldown Line Non-IP End Extension Spool (ME-390663).

[signature] — 7-12-05
Technician(s) — Date

4.49 Position the Pumping Line Non-IP End Extension Spool (ME-390650).

[signature] — 7-12-05
Technician(s) — Date

4.50 Weld the Cooldown Line Non-IP End Extension Spool (ME-390663) to the Cooldown Line Tube (MB-390225) per Q3 Cryostat Internal Piping Assembly (ME-390213).

William Garfield — 7-12-05
Weldor(s) — Date

4.51 Weld the Pumping Line Non-IP End Extension Spool (ME-390650) to the Pumping Line Tube (MB-390224) per Q3 Cryostat Internal Piping Assembly (ME-390213).

William Garfield — 7-12-05
Weldor(s) — Date

4.52 Position the Cooldown Line Tube (MB-390225) and the Pumping Line Tube (MB-390224) per Q3 Cryostat Internal Piping Assembly (ME-390213).

[signature] — 7-12-05
Technician(s) — Date

4.53 Purge the Cooldown Line Tube (MB-390225) and the Pumping Line Tube (MB-390224) and the Cold Mass with Argon Gas (Ar).

[signature] — 7-12-05
Inspector — Date

4.54 Weld the Cool Down Line (MC-390225) and the Pumping Line Tube (MB-390224) to the Q3 Pipe Anchor (MC-390486) as per Q3 Cryostat Assembly Internal Piping (ME-390213).

William Garfield — 7-12-05
Weldor(s) — Date

Move to AFTE 4.32 TRL 1805

4.55 Weld the Q3 Pipe Anchor (MC-390486) to the Cold Mass Assembly (ME-390528) as per Q3 Cryostat Assembly Internal Piping (ME-390213).

William Garfield — 7-12-05
Weldor(s) — Date

4.56 Insert Q3 4.5k Intercept Line Tubes (MB-390226) as per Q3 Heat Exchanger Assembly (ME-390214).

Technician(s) _____ Date 7-12-05

4.57 Purge the Q3 4.5k Intercept Line Tubes (MB-390226).

Technician(s) _____ Date 7-12-05

4.58 Weld the 4.5k Intercept Line Non-IP End Extension Weldments (ME-390679) to the 4.5k Intercept Line Tubes (MB-390226) as per Q3 Cryostat Assembly Internal Piping (ME-390213).

Weldor(s) _____ Date 7-12-05

4.59 Ensuring that the Q3 4.5k Intercept Line Pipes (MB-390226) have been purged, weld the Intercept Line Pipe Stops (MA-390379) as per Q3 Cryostat Assembly Internal Piping (ME-390213).

Weldor(s) _____ Date 7-12-05

ollie → 4.60 Install the Fiducial Mounting Blocks (MB-390808) per Q3 Cold Mass Welded Assembly (ME-390529).

Technician(s) _____ Date 7/11/05

Bill G. → 4.61 Weld the Fiducial Mounting Blocks (MB-390808) per Q3 Cold Mass Welded Assembly (ME-390529).

Weldor(s) _____ Date 7-11-05

Dr # ~~[illegible]~~ 4270 4.62 Prepare Cold Mass Assembly for Pressure Test at 363 psi.

Technician(s) _____ Date 7-13-05

See STR 4.39

STOP

4.63 Verify Cold Mass Assembly is ready for Pressure Test at 363 psi.

Responsible Authority/Physicist _____ Date 7/14/05

STOP

4.64 Perform a Pressure Test of the Cold Mass Assembly at 363 psi Nitrogen per Section 5034 of the Fermilab ES&H Manual and UG-100 of the Code.

Warning:

The test is to be performed after normal working hours and only personnel directly involved with the test will be present.

Responsible Authority/Physicist _____ Date 7/14/05

4.65 Leak Check the Cold Mass Assembly. (This will include the Outer Shell (MD-390385)).

Part No. cold mass assem.	DETERMINATION OF DETECTABLE LEAK						
	M.D.S. ÷ ((Response – Background) ÷ Leak value) = MDL						
OPERATOR'S LAST NAME	SCALE UNITS BEFORE HELIUM PROBE	SCALE UNITS WHILE ENCLOSURE FLOODING	MDS	Response	Background	Leak Value	MDL
Wilson	82X1	82X1	2	56X5	82X1	3.91 xE-8	3.94 xE-10

Inspector _____ Date 7-19-05

4.66 Leak check the three Q3 4.5k Intercept Lines (MB-390226).

Q3 IP END VIEW

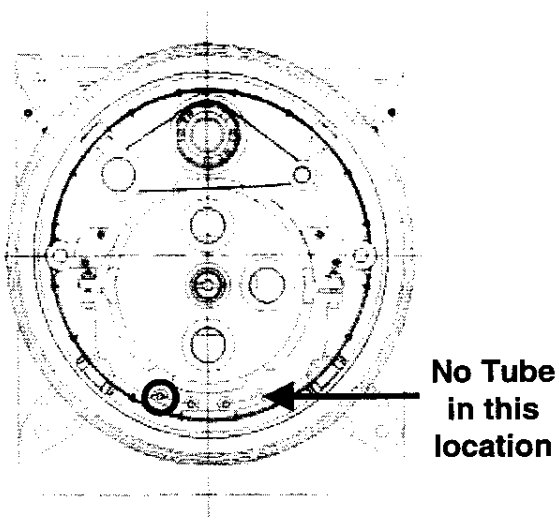

4.5k Intercept Line - #1

Part No. inter. line 4.5 K	DETERMINATION OF DETECTABLE LEAK						
	M.D.S. ÷ ((Response – Background) ÷ Leak value) = MDL						
OPERATOR'S LAST NAME	SCALE UNITS BEFORE HELIUM PROBE	SCALE UNITS WHILE ENCLOSURE FLOODING	MDS	Response	Background	Leak Value	MDL
Wilson	28X1	28X1	2	56X5	28X1	3.91 xE-8	3.10 xE-10

Q3 IP END VIEW

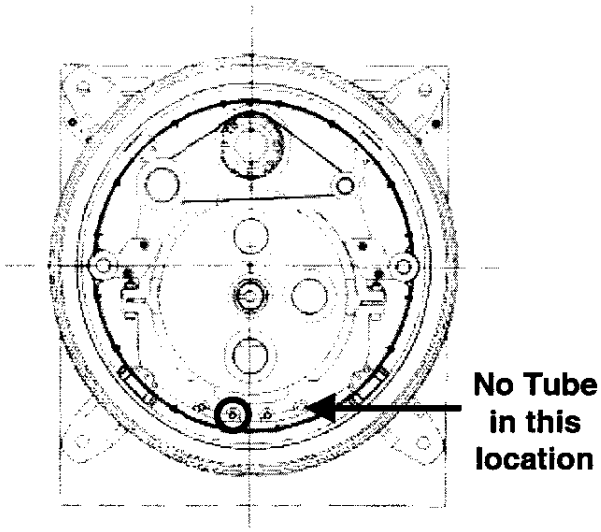

4.5k Intercept Line - #2

Part No. inter. line 4.5 K	DETERMINATION OF DETECTABLE LEAK						
	M.D.S. ÷ ((Response – Background) ÷ Leak value) = MDL						
OPERATOR'S LAST NAME	SCALE UNITS BEFORE HELIUM PROBE	SCALE UNITS WHILE ENCLOSURE FLOODING	MDS	Response	Background	Leak Value	MDL
Wilson	18 X1	18X1	2	56X5	18X1	3.91 xE-8	2.98 xE-10

Q3 IP END VIEW

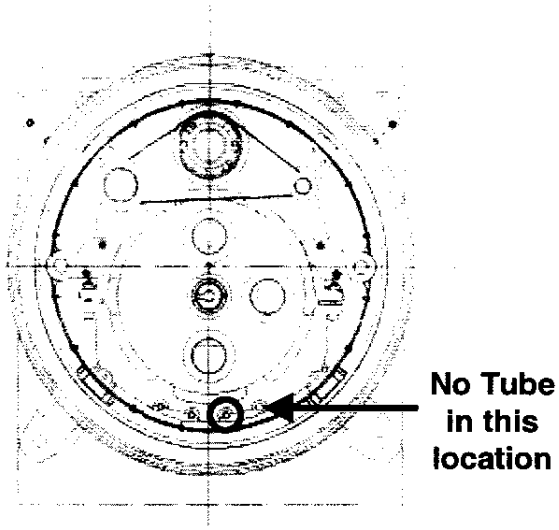

4.5k Intercept Line - #3

Part No. inter. line 4.5 K	DETERMINATION OF DETECTABLE LEAK						
	M.D.S. ÷ ((Response – Background) ÷ Leak value) = MDL						
OPERATOR'S LAST NAME	SCALE UNITS BEFORE HELIUM PROBE	SCALE UNITS WHILE ENCLOSURE FLOODING	MDS	Response	Background	Leak Value	MDL
Wilson	26X1	26X1	2	56X5	26X1	3.91 xE-8	3.07 xE-10

Inspector

7-18-05
Date

4.67 Leak check the Cooldown Line (MD-390225).

Q3 IP END VIEW

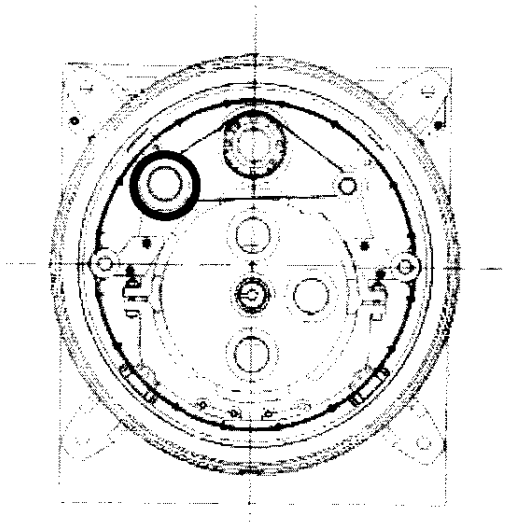

Cooldown Line (MD-390225)

Part No. Cooldown line	DETERMINATION OF DETECTABLE LEAK						
	M.D.S. ÷ ((Response – Background) ÷ Leak value) = MDL						
OPERATOR'S LAST NAME	SCALE UNITS BEFORE HELIUM PROBE	SCALE UNITS WHILE ENCLOSURE FLOODING	MDS	Response	Background	Leak Value	MDL
Wilson	56X1	56X1	2	60X5	56X1	3.91 x E-8	3.20 x E-10

Technician(s) Jackie Wilson

Date 7-18-05

4.68 Leak check the Pumping Line (MB-390224).

Q3 IP END VIEW

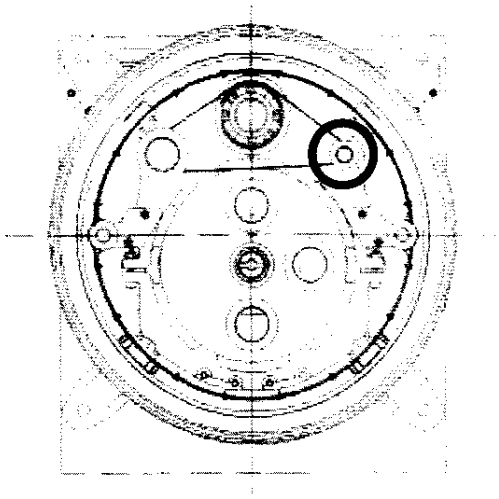

Pumping Line (MB-390224)

Part No. Pumping line	DETERMINATION OF DETECTABLE LEAK						
	M.D.S. ÷ ((Response – Background) ÷ Leak value) = MDL						
OPERATOR'S LAST NAME	SCALE UNITS BEFORE HELIUM PROBE	SCALE UNITS WHILE ENCLOSURE FLOODING	MDS	Response	Background	Leak Value	MDL
Wilson	38x1	38x1	2	57x5	38x1	3.91 x E-8	3.16 x E-10

Technician(s) Wilson

Date 7-18-05

5.0 Shield Assembly

5.1 Install the Threaded Rods (Tie Rod Assembly) (MC-390638). See copy of step 19.9 (Q3 Module Assembly Traveler, TR-333729) in designated book, for the distance between the Suspension Rings. Record the previously recorded measurements below.

Non-IP North to IP North 4415 mm

Non-IP South to IP South 4415 mm

Technician(s) _____ Date 7/20/05

5.2 Install the Cold Mass Insulation Mounting Lug Blankets (MC-390496).

Technician(s) _____ Date 7/20/05

5.3 Lift the Cold Mass Assembly and place the (IP End) Q3 End Section (ME-390439) and (Non-IP End) Q3 End Section (ME-390439) on the Insertion Rails. Lower the Cold Mass back onto the rails ensuring the holes in the Shield Sections line up with Support Rollers.

Technician(s) _____ Date 7/20/05

5.4 Insert the Mid Section (ME-390435) and the Support Bands (MD-390083).

Technician(s) _____ Date 7/20/05

5.5 Assemble the bottom half of the shield. Leave all bolts loose. Spray all screw threads with Molybdenum.

Technician(s) _____ Date 7/20/05

5.6 Assemble the Cooling Tubes (MD-390437) to the Bottom Half of the Shield.

Technician(s) _____ Date 7 20 05

5.7 Lift the Cold Mass and place the Shield Inner and Outer MLI Blankets (ME-390489 & ME-390490) onto the Insertion Rails in the correct orientation.

Note(s):

Place the Outer Blanket (ME-390490) on the Rails first.

Technician(s) _____ Date 7/20/05

5.8 Lower the Cold Mass onto the rails. Ensure the slits in the blankets line up with Support Rollers.

Technician(s) _____ Date 7/20/05

5.9 Install the Cold Mass MLI Blankets per (ME-390527) and in the same position as Step 4.6.

Technician(s) _____ Date 7/20/05

5.10 Cut and install the pipe MLI blankets per Q3 Piping Assembly Insulation Installation (ME-390545).

DR 4274 Cut Ins

Technician(s) _____ Date 7/20/05

5.11 Install the Upper Shield per Q3 Thermal Shield Assembly (ME-390436). Spray all screw threads with Molybdenum. Ensure the shield is not sagging prior to the final tightening of the shield screws.

Technician(s) _____ Date 7/21/05

5.12 Install the Shield Blankets (ME-390489 & ME-390490).

Technician(s) _____ Date 7/21/05

TRR
WELD
NON-IP END
EXTENSION SPOOLS
(2)
LEAK CHECK

6.0 Cold Mass Insertion into the Vacuum Vessel

6.1 Install Green Putty between the Vacuum Vessel and the Insertion Rails.

Technician(s) _____ Date 7-21-05

6.2 Install the Cold Mass Pull-in Tooling.

Technician(s) _____ Date 7-21-05

6.3 Mount the Pneumatic Winch to floor on the West side of the Vacuum Vessel.

Technician(s) _____ Date 7-21-05

6.4 Connect the cable to the Pull-in Tooling.

Technician(s) _____ Date 7-21-05

6.5 Pull the Cold Mass Assembly into the Vacuum Vessel.

Technician(s) _____ Date 7-21-05

6.6 When the Cold Mass is fully inserted, install the Suspension System Adjusting Screws (MB-390039).

Technician(s) _____ Date 7.21.05

6.7 Adjust the Suspension System Adjusting Screw (MB-390039) as needed to center the Cold Mass in the Vacuum Vessel.

Technician(s) _____ Date 7-21-05

6.8 Install Conflat Flanges (MA-390374) w/ Copper Gaskets (MA-390375) and Bolt Set (MA-390376) to Cryostat as per Q3 Cryostat General Assembly (ME-390132).

Technician(s) _____ Date 7/28/05

6.9 Install Target Holders (Right, MD-390539), (Left, MD-390540) and (MD-390211) as per Q3 Cryostat General Assembly (ME-390132).

Technician(s) _____ Date 7-17-05

6.10 Install Reference Socket Cup (MA-390426) as per Q3 Cryostat General Assembly (ME-390132).

Technician(s) _____ Date 7-17-05

7.0 Final Electrical Inspection

7.1 Perform an electrical inspection on each of the Individual Quadrants and the Cold Mass. Refer to the Valhalla and Leader Free Standing Coil Measurement Procedure (ES-292306).

To measure the Resistance of a Q3 Cold Mass:

1. Use Valhalla Scientific 4300B digital micro-ohmmeter.
2. Set Test Current to 0.1 amp.
3. Set Scale to 2V full scale.
4. Turn temperature compensation on.
5. Turn test current off.
6. Connect I_{HI} to Q4 inner power lead as shown in figure.
7. Connect I_{LO} to Q3 inner power lead as shown in figure.
8. Turn test current on.
9. Connect V_{HI} and V_{LO} to voltage taps as shown in resistance table.
10. To measure Total with leads, connect V_{HI} to Q4 power lead and V_{LO} to Q3 power lead.
11. Read resistance and record in traveler.

(Q3) Resistance				Nominal 3.35 to 3.45 Ω
Voltage Tap Serial Numbers				Total Resistance
Connect	Fermi	CERN	KEK	
V_{HI}	VTa1Q3	EE1113	a1	3.41 Ω
V_{LO}	VTc1Q3	EE1213	c1	
V_{HI}	VTc1Q3	EE1213	c1	3.41 Ω
V_{LO}	VTb1Q3	EE1313	b1	
V_{HI}	VTa1Q3	EE1113	a1	6.82 Ω
V_{LO}	VTb1Q3	EE1313	b1	

		Total Resistance with Leads
		Nominal 6.75 to 6.85 Ω
V_{HI}	Q4 Power Lead	6.82 Ω
V_{LO}	Q3 Power Lead	

Technician(s) _____ Date 7-25-05

Check resistance of Redundant Voltage Taps.

Q3 Redundant Voltage Taps				Nominal 3.35 to 3.45 Ω
Connect	Fermi	CERN	KEK	Resistance
V_{HI}	VTa2Q3	EE1123	a2	3.41 Ω
V_{LO}	VTc2Q3	EE1223	c2	
V_{HI}	VTc2Q3	EE1223	c2	3.41 Ω
V_{LO}	VTb2Q3	EE1323	b2	

Technician(s) _____ Date 7-25-05

To measure Ls and Q of a Q3 Cold Mass:

1. Use Agilent 4263B LCR Meter.
2. Turn power on by pushing line button. Wait 30 seconds until display screen is lit.
3. Recall program #1. To do this, push recall (Rcl), then push #1, then push Enter.
4. Push Auto/Hold button to release hold.
5. Verify that the frequency displayed in the upper right corner of the display screen is 1000 Hz and the level recorded in the lower right corner of the display screen is 1V or 1000 mV.
6. Connect H_{cur} to Quadrant 4 power lead as shown in figure.
7. Connect L_{cur} to Quadrant 3 power lead as shown in figure.
8. Connect H_{pot} and L_{pot} buttons to voltage taps as shown below.

To measure Q3:

- To measure Quadrants 1&4, connect H_{pot} to VTa1 (EE1113 for Q3), and L_{pot} to VTc1 (EE1213 for Q3).
- To measure Quadrants 2&3, connect H_{pot} to VTc1 (EE1213 for Q3), and L_{pot} to VTb1 (EE1313 for Q3).
- To measure total, connect H_{pot} to VTa1 (EE1113 for Q3), and L_{pot} to VTb1 (EE1313 for Q3).

9. Read Ls and Q from display and record in traveler.

(Q3) Inductance				Nominal 15 to 16 mH
Voltage Tap Serial Numbers				Total Inductance
Connect	Fermi	CERN	KEK	
H_{POT}	VTa1Q3	EE1113	a1	15.318 mH
L_{POT}	VTc1Q3	EE1213	c1	
H_{POT}	VTc1Q3	EE1213	c1	15.279 mH
L_{POT}	VTb1Q3	EE1313	b1	

				Nominal 30 to 32 mH
				Total Inductance
H_{POT}	VTa1Q3	EE1113	a1	30.590 mH
L_{POT}	VTb1Q3	EE1313	b1	

(Q3) Q-Factor				Nominal 1.0 to 1.2
Voltage Tap Serial Numbers				Total Q
Connect	Fermi	CERN	KEK	
H_{POT}	VTa1Q3	EE1113	a1	1.1
L_{POT}	VTc1Q3	EE1213	c1	
H_{POT}	VTc1Q3	EE1213	c1	1.1
L_{POT}	VTb1Q3	EE1313	b1	

				Nominal 1.0 to 1.2
				Total Inductance
H_{POT}	VTa1Q3	EE1113	a1	1.1
L_{POT}	VTb1Q3	EE1313	b1	

Technician(s)

7.25.05
Date

To measure the resistance of a Thermometer (RTD):

1. Use Hewlett Packard HP3457A digital multimeter.
2. Record temperature of building within +/- 5 degrees.
3. Press line button to turn line on.
4. Connect wires as shown in Figure below.
   U+ (Black) to Sense HI
   I+ (Yellow) to Input HI
   U- (Red) to Sense LO
   I- (Green) to Input LO
5. Push blue button (function key) once.
6. Push OHMF button.
7. Verify arrow in readout is above the 4WΩ (meaning a 4 wire resistance measurement).
8. Read resistance in ohms and record in traveler.

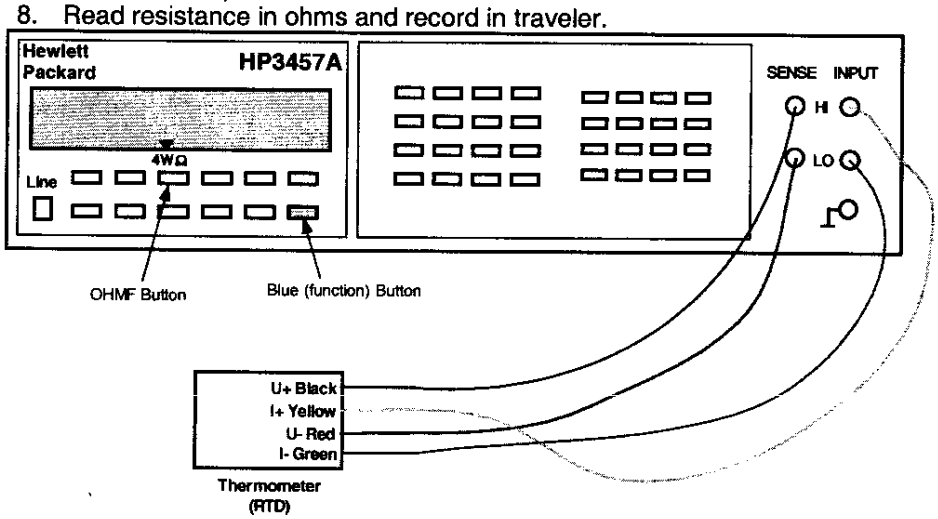

To measure the resistance of a Cryogenic (Warm-up) Heater

1. Use Hewlett Packard HP3457A digital multimeter.
2. Record temperature of building within +/- 5 degrees.
3. Press line button to turn line on.
4. Connect wires as shown in Figure below.
5. Push blue button (function key) once.
6. Push OHMF button.
7. Verify arrow in readout is above the 4WΩ (meaning a 4 wire resistance measurement).
   Note: Although this is technically a 4 wire measurement, it is effectively a 2 wire measurement, since there are only 2 wires connected to each heater.
8. Read resistance in ohms and record in traveler.

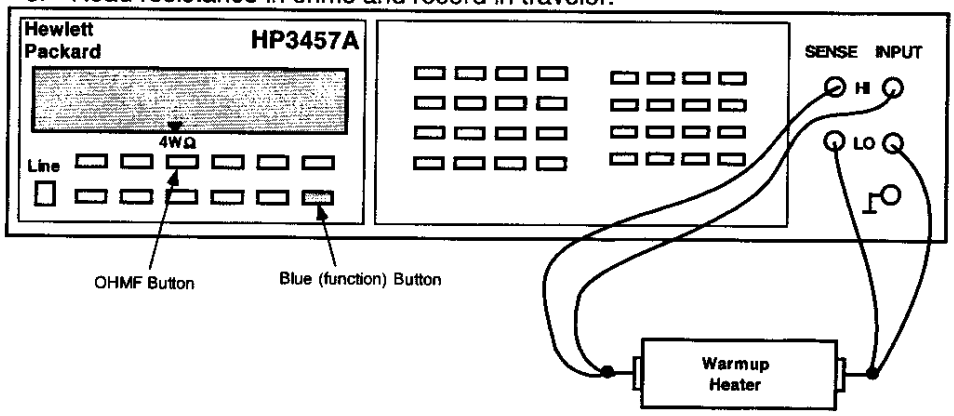

Q3 - RTD's and Cryogenic (warm-up) Heaters				
Temperature of Building (± 5°): 78° F				
Component	Fermi	CERN	Range	Resistance
Q3 RTD, primary	TaQ3	TT8313	60 to 70 Ω	64.587 Ω
Q3 RTD, redundant	TbQ3	TT8323	60 to 70 Ω	66.611 Ω
Q3 Cryogenic (warm-up) Heater (LE) - wire at top (CERN #1 I+)	W1aQ3	EH8313+	16 to 18.5 Ω	17.75 Ω
Q3 Cryogenic (warm-up) Heater (LE) - wire at bottom (CERN #1 I-)	W2aQ3	EH8313-		
Q3 Cryogenic (warm-up) Heater (Non-LE) - wire at top (CERN #2 I+)	W1bQ3	EH8323+	16 to 18.5 Ω	17.34 Ω
Q3 Cryogenic (warm-up) Heater (Non-LE) - wire at bottom (CERN #2 I-)	W2bQ3	EH8323-		

Technician(s) _____ Date 7-25-05

Using the Hewlett Packard HP3457A digital multimeter, measure the Protection (Strip) Heater Resistance for Q3.

Q3 Protection (Strip) Heater Resistance					
Fermi	CERN	KEK	Description	Limit	Resistance
H1aQ3	YT1113+	HA1	Circuit A	28 to 32 Ω	30.2 Ω
H2aQ3	YT1113-	HA2			
H1bQ3	YT1123+	HB1	Circuit B	28 to 32 Ω	30.2 Ω
H2bQ3	YT1123-	HB2			

Technician(s) _____ Date 7-25-05

7.2 Using the Valhalla 4300B, connect 10mA applied voltage thru the corrector Power Leads. Measure Resistance and record in the table below.

Corrector Bus Leads

	V3A	V3B	H3A	H3B	B3A	B3B	B6A	B6B	
	V2A	V2B	H2A	H2B	B4A	B4B	A4A	A4B	
	V1A	V1B	H1A	H1B	A2A	A2B	A3A	A3B	

(View Looking from DFBX into Q3)

Corrector Assembly	Corrector Element	Readout Labels		Power Labels	Resistance
MQSX	MQSX	A2A	EE8223	A2A, A2B	.05
		EE8223	A2B		7.65
		A2A	A2B		7.71
MCBXA	MCBXV	V3A	EE8113	V3A, V3B	.01
		EE8113	V3B		17.53
		V3A	V3B		17.54
	MCBXH	H3A	EE8123	H3A, H3B	.01
		EE8123	H3B		21.55
		H3A	H3B		21.56
	MCTX	B6A	EE8613	B6A, B6B	.01
		EE8613	B6B		98.74
		B6A	B6B		98.75
	MCSX	B3A	EE8313	B3A, B3B	.01
		EE8313	B3B		27.97
		B3A	B3B		27.98
MCSOX	MCOSX	A4A	EE8423	A4A, A4B	.01
		EE8423	A4B		11.64
		A4A	A4B		11.65
	MCOX	B4A	EE8413	B4A, B4B	.01
		EE8413	B4B		12.80
		B4A	B4B		12.81
	MCSSX	A3A	EE8323	A3A, A3B	.01
		EE8323	A3B		13.27
		A3A	A3B		13.27

Technician(s) 7-25-05 Date

8.0 Final Preparations

8.1 Prepare the Power Leads to be cut by measuring and marking the appropriate cutoff location as per Q3 Module Assembly (ME-369900). Remove any Kapton insulation from the end of the lead to approximately 4 inches beyond the cutoff mark. Clamp the Leads, individually, using the "Lead Clamp Block Tooling".

Technician(s) _____ Date 5-24-05

8.2 Cut the Power Leads as per Q3 Module Assembly (ME-369900).

Technician(s) _____ Date 5-24-05

8.3 Fuse the Ends of the Leads.

Weldor(s) _____ Date 5/24/05

8.4 Remove Clamps when fusing is complete and it is safe to do so.

Technician(s) _____ Date 5-24-05

STRETCH WIRE TUBE ALIGNMENT

8.5 Perform a pressurized Leak Check of the Cryostat Assembly.

Part No. Pressure leak	DETERMINATION OF DETECTABLE LEAK						
	M.D.S. ÷ ((Response – Background) ÷ Leak value) = MDL						
OPERATOR'S LAST NAME	SCALE UNITS BEFORE HELIUM PROBE	SCALE UNITS WHILE ENCLOSURE FLOODING	MDS	Response	Background	Leak Value	MDL
Wilson	68X1	68X1	2	56X5	68X1	3.91 x E-8	3.68 x E-10

Inspector _____ Date 8-3-05

PART NO. extension on shield tube		SCALE UNITS BEFORE HELIUM PROBE	SCALE UNITS WHILE ENCLOSURE FLOODING	cooling tube 390437 DETERMINATION OF MINIMUM DETECTABLE LEAK				
DATE TIME	OPERATOR'S LAST NAME			MDS ÷ ((Response - Bckgnd) ÷ Leak Value) = MDL				
8/3/05	Wilson	22X1	22X1	2	58X5	22X1	3.91X10-8	2.91X10-10

9.0 Production Complete

9.1 Process Engineering verify that the LHC Q3 Cryostat Assembly Traveler (5520-TR-333730) is accurate and complete. This shall include a review of all steps to ensure that all operations have been completed and signed off. Ensure that all Discrepancy Reports, Nonconformance Reports, Repair/Rework Forms, Deviation Index and dispositions have been reviewed by the Responsible Authority for conformance before being approved.

Comments:

Process Engineering/Designee

2/13/06
Date

PART NO. extension on shield tube		SCALE UNITS BEFORE HELIUM PROBE	SCALE UNITS WHILE ENCLOSURE FLOODING	Cooling tube 390437 DETERMINATION OF MINIMUM DETECTABLE LEAK				
DATE TIME	OPERATOR'S LAST NAME			MDS ÷ ((Response - Bckgnd) ÷ Leak Value) = MDL				
8/3/05	Wilson	19X1	19X1	2	58X5	19X1	3.91×10^{-8}	2.88×10^{-10}

Traveler Title:	Specification No:	Revision:	DR No:
LHC Q3 LQXC Cryostat Final Assembly Traveler	5520-TR-333730	A	4270

Step No:	Drawing No:	Routing Form No:	Serial No:	Rework ID:
4.62	390213		LQXC03	0

Discrepancy Description:

The Q3 heat exchanger corrugated tube assembly (390216) is not welded perpendicular to the outer shell weldment (390385) on the non-ip end.

Originator: Steve Gould

Date: 7/13/2005 1:05:36 PM

Cause of Nonconformance:

The pipe was not straight when welded.

Responsible Authority: Thomas Page

Date: 7/13/2005 1:46:03 PM

Disposition:

Grind the weld between the pipe and end cap. Re-weld the pipe to the end cap ensuring the pipe is perpendicular to the end cap when tack welding.

Responsible Authority: Thomas Page

Date: 7/13/2005 1:46:03 PM

Corrective Action to Prevent Recurrence:

Ensure the pipe is perpendicular to the end cap when tack welding the pipe to the end cap. This step should be added to the traveler.
Disposition verify notes: TR1805 B. Jensen 2/13/06

Responsible Authority: Thomas Page

Date: 7/13/2005 1:46:03 PM

Corrective Action/Disposition Verified By: Bob Jensen

Date: 2/13/2006 1:52:09 PM

Will Configuration be affected?: ☐ YES ☑ NO

Identified problem area:

☐ Material ☐ Manpower ☑ Method ☐ Machine ☐ Measurement

Reviewed By: Bob Jensen

Date: 2/13/2006 2:00:12 PM

Traveler Title:	Specification No:	Revision:	DR No:
LHC Q3 LQXC Cryostat Final Assembly Traveler	5520-TR-333730	A	4274

Step No:	Drawing No:	Routing Form No:	Serial No:	Rework ID:
5.10	390545		LQXC03	0

Discrepancy Description:

I.P. end pipe support is approx. 600 mm closer to the middle support (farther from the magnet end) than the print calls out.

Originator: Damon Bice

Date: 7/21/2005 8:43:12 AM

Cause of Nonconformance:

The pipe support was not installed in the proper location.

Responsible Authority: Thomas Page

Date: 7/21/2005 11:33:32 AM

Disposition:

Remove the pipe support and re-position it in the proper location. The original retaining clips may be left in place and new retaining clips added at the new position.

Responsible Authority: Thomas Page

Date: 7/21/2005 11:33:32 AM

Corrective Action to Prevent Recurrence:

Double check the measurement when positioning the pipe supports. Refer to the print (see traveler for drawing number) for proximity of pipe support locations as an additional check.

Responsible Authority: Thomas Page

Date: 7/21/2005 11:33:32 AM

Corrective Action/Disposition Verified By: Bob Jensen

Date: 2/13/2006 1:54:57 PM

Will Configuration be affected?: ☐ YES ☑ NO

Identified problem area:

☐ Material ☐ Manpower ☑ Method ☐ Machine ☐ Measurement

Reviewed By: Bob Jensen

Date: 2/13/2006 2:01:09 PM

Revision Request Control Number: 1805

Specification Number: 5520 - TR - 333730 Current Revision: D

Traveler or Document Title LHC Q3 LQXC Cryostat Final Assembly Traveler

Step #/Description of Revision:

4.19 Change sign-off from Technicians to Weldor
4.37 Remove step. Same as 4.40
4.39 Ensure the pipe is perpendicular to the end cap when tack welding the pipe to the end cap
4.40 Remove step. Same as 4.37
4.44 Remove step.
4.45 Remove step.
4.55 Move step to 4.32
8.2 Step to be verified by Lead Person
8.7 Now Step 8.5
8.8 Now Step 8.6
8.5 Now Step 8.7
8.6 Now Step 8.8

Bob Jensen	Bob Jensen	1/26/2006
Originator	Responsible Authority	Date

Revision Incorporated into the Traveler:

	Revision Incorporated By	Date

Process Engineering Final Review:

	Process Engineering/Designee	Date

Instructions for the completion of the Revision Request Form

Note(s):

Multiple steps may be effected by one Revision Request Form but only one specific Traveler or Document may be effected by each Revision Request Form.

If completing this form by hand, a Revision Request Control Number must be obtained before processing.

If completing this form entirely by electronic means, the printed copy to be filed in the Process Engineering Office is to be initialed by the individual incorporating the Revision Request and the individual who reviewed the Traveler or Document.

Originator Instructions:

1) Specification Number: - Enter the Specification Number of the Traveler or Document to be revised. (Document title is inserted automatically from the spec. #)

2) Current Revision: - Enter the Revision of the Traveler or Document to be revised.

3) Step# / Description of the Revision: - Enter a description of the revision to be made and the step# it applies to, if applicable. If needed to describe the revision attach a copy of the page(s). If the revision is coming from a related document such as a Discrepancy Report or an Engineering Order attach a copy of that document to the Revision Request Form.

4) Originator: - Originator is the person generating the form. (Select Name from List)

5) Responsible Authority: - Responsible Authority is person responsible for the process in question. (Select Name from List)

Process Engineering Office Instructions:

1) Revision Incorporated into the Traveler: - Signature of the individual who incorporated the revision.

2) Process Engineering Final Review: - Review the Traveler or Document revised, sign and date the form. The original completed Revision Request Form will be retained by the Process Engineering Office in the Revision Request Binder.

ADDITIONAL PARTS REQUEST

ADDITIONAL PARTS REQUEST FORM SHALL BE USED TO ACCESS ALL ITEMS FROM INVENTORY WITH THE EXCEPTION OF PARTS KITS.

THIS FORM MUST BE SIGNED BY AN ACQUISITIONER BEFORE BRINGING TO THE STOCKROOM

MAGNET OR COIL # *LQXC03*

DATE REQUESTED *7/8/05*

BUDGET CODE *300/1.1.1.3.4(LCD)*

JOB TICKET #

MACHINE SHOP REQ. #

PURCHASE RELEASE #

REQUESTED BY *Steve Gould*

DELIVER TO *ICB*

NEED BY DATE *7/8/05*

MMR #

PO #

OTHER

RECEIVED JUL 08 2005 MATERIAL CONTROL /IB4

PARTS STATUS (CHECK ONE)

- ☐ DEFECTIVE PARTS ISSUED
- ☐ PARTS SCRAPPED
- ☐ A/R ITEMS
- ☐ DEFECTIVE ASSEMBLY
- ☐ MISSING FROM KIT ALREADY ISSUED
- ☒ INDIVIDUAL PARTS
- ☐ CONSUMABLES
- ☐ PARTS LOST

ACQUISITIONER SIGNATURE Marsha Schmidt **ID#** 4223 **DATE** 7/8/05

PLEASE INDICATE REVISION REQUIRED

In Stock 33

LOCATION	PART #	REV	QTY	UOM	DESCRIPTION	RF #	SIR #
IB#4-BIN	*390136*		*4*	*Each*	*Retaining Clamp*	77132	

STOCKROOM SIGNATURE Anne Ludwin **ID#** 14290 **DATE** 7/8/05

PARTS DELETED FROM DATABASE **ID#** **DATE**

A COPY OF THIS FORM IS TO BE INCLUDED IN WITH THE TRAVELER

PARTS RECEIVED BY S Gould **ID#** 4965 **DATE** 7/8/05

TD - Engineering Fabrication Component Kit List

ORIGINAL

Process Engineering

Component Serial No.: LQXC03

Kit submitted by: John Szostak | Ext. 2003

Fermi ID No.: 02943C

Date submitted: 7-Mar-05

Need date: 15-Mar-05

Deliver to: ICB

Use with Traveler No.: 333730

Job No.: 248

M&S task number: 300 | 1.1.1.3.4

Drawing Title: Q3 CRYOSTAT GENERAL ASSEMBLY

Drawing No.: ME-390132 | Rev. E

Material Control

Parts available

Verified by: M. Schmidt

Fermi ID No.: 04223N

Date submitted to stockroom: 10-Mar-05

Parts issued

Issued by: [illegible]

Fermi ID No.: 12742

Date issued: 3-24-05

Parts received by E&F: [illegible]

Fermi ID No.: 02943C

Date received by E&F: 3/24/05

	Description	Dwg Size	Number	Rev	Unit	Quantity Required	Location	Quantity Issued	E&F Verified	Routing Form Number	Spares Number / Comment
1	ADJUSTING SCREW	MB	390039	C	EA	8	IB4 Bin	8	[illegible]	81148	52 pcs.
2	VACUUM VESSEL ASSEMBLY	ME	390133	E		ICB HAS					
3	TARGET HOLDER	MD	390211	B	EA	4	R10,1,1	4	[illegible]	74751	22 pcs.
4	Blank Non-Rotatable Conflat Flange, 4.62" OD 304 SS	MA	390374	*	EA	8	R8,3,4	8	[illegible]	78987	72 pcs.
5	COPPER GASKET	MA	390375	*	EA	8	IB4 Bin	8	[illegible]	78429	74 pcs.
6	BOLT SET, HEX HEAD, 5/16 - 24 x 1.25 w/ WASHER	MA	390376	*	EA	80	IB4 Bin	80	[illegible]	72306	724 pcs.
7	WASHER .656" ID x 1.38" OD x .13" THK, STN STEEL	MA	390377	*	EA	8	IB4 Bin	8	[illegible]	77866	74 pcs.
8	REFERENCE SOCKET CUP (Furnished by CERN)	MA	390426	*	EA	8	R1,3,5	8	[illegible]	77884	80 pcs.
9	VINYL FLANGE COVER FOR 75 MM FLANGE	MA	390491	*	EA	6	IB4 Bin	6	[illegible]	78836	192 pcs.
10	VINYL FLANGE COVER FOR 114 MM FLANGE	MA	390492	*	EA	4	IB4 Bin	4	[illegible]	78836	190 pcs.

ORIGINAL

TD - Engineering Fabrication Component Kit List

	Description	Dwg Size	Number	Rev	Unit	Quantity Required	Location	Quantity Issued	E&F Verified	Routing Form Number	Spares Number / Comment
11	VINYL FLANGE COVER FOR 134 MM FLANGE	MA	390493	*	EA	7	IB4 Bin	7	KA	78837	256 pcs.
12	VINYL FLANGE COVER FOR 201 MM FLANGE	MA	390494	*	EA	1	IB4 Bin	1	KA	78834	80 pcs.
13	ALIGNMENT FIDUCIAL COVER	MA	390495	*	EA	8	IB4 Bin	8	KA	78957	158 pcs.
14	TARGET HOLDER, RIGHT	MD	390539	*	EA	2	R8,S1,L3	2	KA	79554	19 pcs.
15	TARGET HOLDER, LEFT	MD	390540	*	EA	2	R8,S1,L5	2	KA	79555	19 pcs.
16	FIDUCIAL MOUNTING BLOCK	MB	390808	*	EA	2	R1,1,3	2	KA	390808	18 pcs.
17	M16-2 x 70.0 mm LG HEX SHCS, 18-8 STN STEEL	MA	393021	*	EA	8	IB4 Bin	8	KA	77840	101 pcs.
18	M6 FLAT WASHER, 18-8 STN STEEL	MA	393024	*	EA	32	IB4 Bin	32	KA	78891	268 pcs.
19	M10-1.5 x 25mm LG HEX SHCS 18-8 STN STEEL	MA	393036	*	EA	24	IB4 Bin	24	KA	77899	258 pcs.
20	M6-1.0 x 35mm LG HEX SHCS 18-8 STN STEEL	MA	393045	*	EA	16	IB4 Bin	16	KA	78886	160 pcs.
21	M8 x 30mm LG HEX SPRING PIN 18-8 STN STEEL	MA	393048	*	EA	8	IB4 Bin	8	KA	78887	94 pcs.
22	M10 LOCK WASHER, 18-8 STN STEEL	MA	393220	*	EA	24	IB4 Bin	24	KA	80024	380 pcs.
23	STD. SPRING PIN SLOTTED M4 x 20mm LG. PLAIN STEEL	MA	393360	E	EA	16	R2,2,3	16	KA	81763	152 pcs.
	INSULATED SHIELD AND PIPING ASSEMBLY	ME	390212	A		1					
24	Q3 SHIELD MLI INNER BLANKET	ME	390489	*	EA	1	Site 38	1	KA	79871 028132	7 pcs.
25	Q3 SHIELD MLI OUTER BLANKET	ME	390490	*	EA	1	Site 38	1	KA	79872	7 pcs.
	Q3 THERMAL SHIELD ASSEMBLY	ME	390436	C	EA	1					
26	SUPPORT BAND	ME	390083	A	EA	4	~~P/N~~	4	KA	77146	36 pcs.

TD - Engineering Fabri ion Component Kit List

ORIGINAL

	Description	Dwg Size	Number	Rev	Unit	Quantity Required	Location	Quantity Issued	E&F Verified	Routing Form Number	Spares Number / Comment
27	RETAINER	MA	390086	*	EA	16	IB4 Bin	16		78914	178 pcs.
28	ALUMINUM SPACER	MA	390373	*	EA	32	IB4 Bin	32		79001	321 pcs.
29	RETAINING WASHER	MA	390378	*	EA	240	IB4 Bin	240		79002	2285 pcs.
30	Q1 & Q3 SHIELD MID-SECTION SECTION	ME	390435	*	EA	2	P/N	2		79382	18 pcs.
31	Q3 COOLING TUBE WELDMENT	MD	390437	A	EA	2	P/N	2		~~79281~~	14 pcs.
32	Q3 END SECTION	ME	390439	A	EA	4	P/N	4		82703 79622	32 pcs.
33	SHIELD EXTRUSION SUPPORT BRACKET ASSEMBLY	MD	390683	A	EA	4	R7,S1,L4	4		80686	105 pcs.
34	THERMAL SHIELD EXTRUSION SUPPORT BRACKET ASSEMBLY	MD	390783	*	EA	4	R7,1,4	4		81981	52 pcs.
35	BUTTON HEAD CAP SCREW, M5 x 16.0 LG.	MA	393028	*	EA	240	IB4 Bin	240		79003	2119 pcs.
Q3 INTERNAL PIPING ASSEMBLY		ME	390213	E	EA	1					
36	PUMPING LINE END FLANGE	MB	390032	B	EA	1	IB4 Bin	1		77210	51 pcs.
37	COOLDOWN LINE END FLANGE	MB	390033	B	EA	1	IB4 Bin	1		77208	32 pcs.
38	Q1 / Q3 PIPE SUPPORT ASSEMBLY	MD	390092	A	EA	3	P/N	3		76617	27 pcs.
39	RETAINING CLIP	MA	390103	*	EA	12	IB4 Bin	12		76785	123 pcs.
40	TIE BAR RETAINING CLAMP	MB	390136	*	EA	4	IB4 Bin	4		77195	33 pcs.
41	Q3 PUMPING LINE	MB	390224	*	EA	1	P/N	1		80217	6 pcs.
42	Q3 COOLDOWN LINE A	MB	390225	A	EA	1	P/N	1		81685	7 pcs.
43	Q3 4.5K INTERCEPT LINE TUBE	MB	390226	*	EA	3	Site 38	3		81303	21 pcs.

ORIGINAI

TD - Engineering Fabri ion Component Kit List

	Description	Dwg Size	Number	Rev	Unit	Quantity Required	Location	Quantity Issued	E&F Verified	Routing Form Number	Spares Number / Comment
44	WELD CONNECTOR ADAPTER	MC	390278	*	EA	1	R1,S1,L3	1		79471	9 pcs.
45	INTERCEPT LINE PIPE STOP	MA	390379	A	EA	6	IB4 Bin	6		78894	107 pcs.
46	Q1 / Q3 PIPE ANCHOR	MC	390486	*	EA	1	R8,S1,L4	1		79387	10 pcs.
47	Q3 COLD MASS ASSEMBLY	ME	390108	B		ICB HAS					
48	Q3 PUMPING LINE NON-IP END EXTENSION SPOOL	MD	390650	*	EA	1	R10,1,3	1		82562	7 pcs.
49	Q3 COOLDOWN LINE NON-IP END EXTENSION SPOOL	MC	390663	*	EA	1	R7,1,2	1		82563	6 pcs.
50	4.5K INTERCEPT LINE NON-IP END EXTENSION WELDMENT	MD	390679	*	EA	3	R1,3,2	3		82653	21 pcs.
51	4.5K INTERCEPT TUBE BAR BRACE	MB	390816	*	EA	2	IB4 Bin	2		82541	32 pcs.
52	M6 x 45.0mm LG HEX SHCS, 18-8 STN STEEL	MA	393017	*	EA	4	IB4 Bin	4		82690	42 pcs.
53	M6 HEX NUT, 18-8 STN STEEL	MA	393022	A	EA	4	IB4 Bin	4		82689	94 pcs.
54	M6 FLAT WASHER 18-8 STN STEEL	MA	393024	*	EA	4	IB4 Bin	4		78891	268 pcs.
55	M6 LOCK WASHER 18-8 STN STEEL	MA	393026	*	EA	4	IB4 Bin	4		82859	207 pcs.
	Q3 HEAT EXCHANGER ASSEMBLY	ME	390214	A	EA	1					
56	CORRUGATED TUBE FLANGE	MB	390030	A	EA	1	IB4 Bin	1		77207	50 pcs.
	OUTER SHELL WELDMENT	MD	390385	A	EA	1					
57	FLAT END CAP	MD	390178	*	EA	1	R1,2,3	1		79494	9 pcs.
58	PIPE	MD	390215	*	EA	1	P/N	1		79999	7 pcs.
59	EXTENSION SPOOL	MD	390659	*	EA	1	R10,1,3	1		81007	7 pcs.

ORIGINAL

TD - Engineering Fabri ion Component Kit List

	Description	Dwg Size	Number	Rev	Unit	Quantity Required	Location	Quantity Issued	E&F Verified	Routing Form Number	Spares Number / Comment
60	**EXTENSION WELD FITTING**	**MD**	**390661**	*	**EA**	**1**	**IB4 Bin**	1		80832	**11 pcs.**
	CORRUGATED TUBE ASSEMBLY	ME	390216	A	EA	1					
61	**CORRUGATED TUBE SUPPORT**	**MC**	**390028**	*	**EA**	**6**	**R9,S1,L4**	6		78144	**15 pcs.**
62	**CORRUGATED TUBE RESTRICTOR**	**MC**	**390029**	**A**	**EA**	**1**	**R9,S1,L4**	1		77724	**43 pcs.**
63	**CORRUGATED TUBE WELDMENT**	**ME**	**390395**	**A**	**EA**	**1**	**P/N**	1		79283	**7 pcs.**
64	**EXTENSION ADAPTER**	**MD**	**390658**	*	**EA**	**1**	**R7,1,4**	1		81004	**7 pcs.**
	Q3 PIPING ASSEMBLY INSULATION INSTALLATION	ME	390545	A	EA	1					
65	**Q1 / Q3 MLI END BLANKET**	**ME**	**390542**	*	**EA**	**2**	**Site 38**	2		79877 81330	**16 pcs.**
66	**Q1 / Q3 MLI MID BLANKET**	**ME**	**390543**	*	**EA**	**1**	**Site 38**	1		79878	**8 pcs.**
	Q1 & Q3 INSTALLATION TIE ROD ASSEMBLY	MC	390638	*	EA	2					
67	**Q1 & Q3 INSTALLATION TIE-ROD SHORT THREADED ROD**	**MA**	**390639**	*	**EA**	**2**	**R2,2,2**	2		81098	**6 pcs.**
68	**JAM NUT (LH)**	**MA**	**393046**	*	**EA**	**4**	**IB4 Bin**	4		80074	**42 pcs.**
69	**STD ANSI HEX THIN JAM NUT 1/2-13 UNC**	**MA**	**393225**	*	**EA**	**8**	**IB4 Bin**	8		80073	**116 pcs.**
70	**STD HEX COUPLING NUT 1/2-13 UNC (RH-LH)**	**MA**	**393226**	*	**EA**	**4**	**IB4 Bin**	4		80075	**36 pcs.**
71	**THREADED ROD 1/2-13 UNC - 24 x 6 FT LONG**	**MA**	**393227**	*	**EA**	**2**	**R7,2,4**	2		80061	**18 pcs.**
72	**THREADED ROD 1/2-13 UNC - 24 (LH) x 3 FT LONG**	**MA**	**393228**	*	**EA**	**2**	**R1,2,3**	2		80072	**16 pcs.**
	Q3 SUSPENSION SYSTEM INSTALLATION	ME	390528	*	EA	1					
73	**TIE BAR SHIM, 6.4 mm**	**MB**	**390118**	*	**EA**	**4**	**IB4 Bin**	4		77204	**32 pcs.**

TD - Engineering Fabri ion Component Kit List

ORIGINAL

	Description	Dwg Size	Number	Rev	Unit	Quantity Required	Location	Quantity Issued	E&F Verified	Routing Form Number	Spares Number / Comment
74	TIE BAR SHIM, 2.4 mm	MB	390119	*	EA	4	IB4 Bin	4		77203	5 pcs.
75	TIE BAR SHIM, 0.8 mm	MB	390120	*	EA	4	IB4 Bin	4		77204	16 pcs.
76	SUSPENSION MTG BRACKET	MD	390279	*	EA	4	R9,S1,L1	4		77180	36 pcs.
77	Q1 / Q3 TIE BAR ASSEMBLY	MC	390400	*	EA	2	P/N	2		77976	18 pcs.
78	Q3 COLD MASS WELDED ASSEMBLY	ME	390529	B		ICB HAS					
79	M8 x 50.0 mm LG SHCS 18-8 STN STEEL	MA	393020	*	EA	12	IB4 Bin	12		82378	111 pcs.
80	M8 HEX NUT, 18-8 STN STEEL	MA	393023	*	EA	12	IB4 Bin	12		76746	392 pcs.
81	M8 FLAT WASHER, 18-8 STN STEEL	MA	393025	*	EA	12	IB4 Bin	12		76745	1234 pcs.
82	M8 LOCK WASHER, 18-8 STN STEEL	MA	393027	*	EA	12	IB4 Bin	12		76744	1181 pcs.
	FIXED SUPPORT ASSEMBLY	ME	390041	D	EA	1					
83	SUSPENSION SYSTEM SUPPORT RING ASSEMBLY	ME	390043	B	EA	1	NT02409	1		76906	5 pcs.
84	SUSPENSION SYSTEM SUPPORT PIN	MB	390047	B	EA	2	R8,S2,L1	2		76914	46 pcs.
85	SUSPENSION SYSTEM SUPPORT PIN SHIM - 1mm	MA	390275	A	EA	8	IB4 Bin	8		76911	6 pcs./2 pcs. ICB
86	SUSPENSION SYSTEM SUPPORT PIN SHIM - 0.5mm	MA	390276	*	EA	8	IB4 Bin	8		82846	8 pcs.
87	SUSPENSION SYSTEM SUPPORT PIN BOLTS	MA	390277	*	EA	8	IB4 Bin	6 6		76913	176 pcs.
88	TWO PIECE CLAMP ON COLLAR	MA	390321	A	EA	4	IB4 Bin	4		76912	36 pcs.
89	SUSPENSION SYSTEM SUPPORT PIN SHIM 0.13 mm	MA	390480	*	EA	8	R2,S2,L4	8		79121	203 pcs.
90	SUSPENSION SYSTEM SUPPORT SHIM 0.25 mm	MA	390481	*	EA	12	R2,S2,L4	12		79122	297 pcs.

TD - Engineering Fabr' tion Component Kit List

ORIGINAL

	Description	Dwg Size	Number	Rev	Unit	Quantity Required	Location	Quantity Issued	E&F Verified	Routing Form Number	Spares Number / Comment
	SLIDING SUPPORT ASSEMBLY	ME	390042	C	EA	1					
91	SUSPENSION SYSTEM SUPPORT RING ASSEMBLY	ME	390043	B	EA	1	NT02409	1	JGA	76906	5 pcs.
92	SUSPENSION SYSTEM SUPPORT PIN	MB	390047	B	EA	2	R8,S2,L1	2	JGA	76914	46 pcs.
93	SUSPENSION SYSTEM SUPPORT PIN SHIM - 1mm	MA	390275	A	EA	8	IB4 Bin	4	JGA	76911	ICB has
94	SUSPENSION SYSTEM SUPPORT PIN SHIM - 0.5mm	MA	390276	*	EA	8	IB4 Bin	8	JGA	82896	ICB has
95	SUSPENSION SYSTEM SUPPORT PIN BOLTS	MA	390277	*	EA	8	IB4 Bin	8	JGA	76913	76 pcs.
96	SUSPENSION SYSTEM SUPPORT PIN SHIM 0.13 mm	MA	390480	*	EA	8	R2,S2,L4	8	JGA	79121	203 pcs.
97	SUSPENSION SYSTEM SUPPORT SHIM 0.25 mm	MA	390481	*	EA	12	R2,S2,L4	12	JGA	79122	293 pcs.
	Q3 MAGNET INSULATION INSTALLATION	ME	390527	B	EA	1					
98	MOUNTING LUG BLANKET	MC	390496	*	EA	8	Site 38	8	JGA	79873 81326	151 pcs.
99	Q1/Q3 END BLANKET	ME	390521	*	EA	2	Site 38	2	JGA	79874 81327	16 pcs.
100	Q1/Q3 MID BLANKET	ME	390522	*	EA	1	Site 38	1	JGA	79875	9 pcs.